# IEC Connectors

A full range of quality mains rated inlets, outlets and connectors conforming to IEC and EN 60320 specifications carrying UL, CSA, VDE and other approvals. With electrical ratings up to 20A, 250V (UL) these connector ranges offer solutions to most mains powered equipment and cable applications. The combinations of mounting styles and terminations include: flange fixing, snap to panel and PCB mounting versions together with 2.8/solder tabs, 4.8 and 6.3 faston tabs, screw terminal and PC spill versions. Completing the range are insulating boots, retaining clips and safety covers.

In addition to the standard black moulding, most styles are also available in either white or grey and special colours to match OEM equipment can also be supplied.




| Type | | Page |
|---|---|---|
| **IEC Power Inlets & Connectors** | | |
| PX0587 | Sheet C13 Rewirable | 76 |
| PX0587/SE | Sheet C13 Rewirable | 76 |
| PX0588 | Sheet C13 Rewirable | 76 |
| PX0575 | Sheet C14 Snap Fit | 77 |
| PX0579 | Sheet C14 Vertical Flange | 78 |
| PX0580 | Sheet C14 Flange/PC Mount | 78 |
| PX0580/PC | Sheet C14 PC Mount | 79 |
| PF0001 | Sheet C14 Single Fuse | 80 |
| PF0002 | Sheet C14 Single Fuse | 80 |
| PF0011 | Sheet C14 Single Fuse | 81 |
| PF0030 | Sheet C14 Twin Fuse | 82 |
| PF0033 | Sheet C14 Twin Fuse | 82 |
| PX0597 | Sheet C15 Hot Condition | 83 |
| PX0590 | Sheet C16 Hot Condition | 83 |
| PX0595 | Sheet C16 Hot Condition | 83 |
| PX0690 | Sheet C18 Flange Mount | 84 |
| PX0691 | Sheet C18 Snap Fit | 84 |
| PF0006 | Sheet C18 Single Fuse | 85 |
| PF0007 | Sheet C18 Single Fuse | 85 |
| PF0016 | Sheet C18 Single Fuse | 85 |

| Type | | Page |
|---|---|---|
| **IEC Power Outlets & Plug Connectors** | | |
| PX0685 | Sheet E Rewirable | 86 |
| PX0686 | Sheet E Rewirable | 86 |
| PX0686/SE | Sheet E Rewirable | 86 |
| PX0716 | Sheet F Snap Fit | 87 |
| PX0718 | Sheet F Snap Fit | 87 |
| PX0717 | Sheet F Snap Fit | 88 |
| PX0578 | Flange Mount | 88 |
| PX0675 | Sheet F Flange Mount | 89 |
| PX0695 | Sheet F Snap Fit | 90 |
| PX0783 | Sheet F Snap Fit Shuttered | 91 |
| PX0793 | Sheet F Flange Mount Shuttered | 91 |
| PX0793/1 | Sheet F Flange Mount Shuttered | 91 |
| PX0705 | Sheet H Flange Mount | 92 |
| PX0725 | Sheet H Snap Fit | 92 |
| **IEC Power Inlets & Connectors - High Current** | | |
| PX0599 | Sheet C19 Rewirable | 93 |
| PX0596 | Sheet C20 Flange Mount | 93 |
| PX0598 | Sheet C20 Snap Fit | 93 |
| **IEC Power Outlets - High Current** | | |
| PX0591 | Sheet J Flange Mount | 94 |
| PX0592 | Sheet J Snap Fit | 94 |
| PX0594 | Sheet I Cable Connector | 94 |
| Accessories | | 95-97 |

## IEC60320 MAINS INLETS AND OUTLETS - PANEL MOUNTING

| IEC60 320-1 | Sheet No. | No. Pins | Current Rating | Flange Fixing | Snap fit | Fused Flange | Fused Snap fit | Filtered | Fused Filtered |
|---|---|---|---|---|---|---|---|---|---|
| 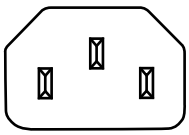 | C14 | 3 | 10A, 250V a.c. | PX0579<br>PX0580<br>PX0580/PC<br>PX0580/PC/12132<br>PX0580/PC/7<br>PX0580/PC/7LC | PX0575<br>PX0575/PC | PF0001<br>PF0001/PC<br>PF0002<br>PF0030<br>PF0030/PC | PF0011<br>PF0011/PC<br>PF0033 | PS00<br>PS01 | PS20<br>PS21<br>PS25<br>PS26 |
| 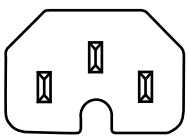 | C16 | 3 | 10A, 250V a.c. | PX0590 | PX0595 | | | | |
| 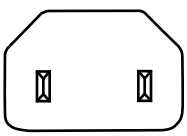 | C18 | 2 | 10A, 250V a.c. | PX0690 | PX0691<br>PX0691/PC | PF0006<br>PF0007 | PF0016 | | |
| 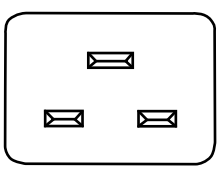 | C20 | 3 | 16A, 250V a.c. | PX0596 | PX0598 | | | | |

| IEC60 320-2-2 | Sheet No. | No. Pins | Current Rating | Flange Fixing | Snap fit | Fused Flange | Fused Snap fit | Filtered | Fused Filtered |
|---|---|---|---|---|---|---|---|---|---|
| 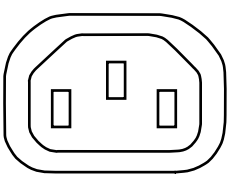 | F | 3 | 10A, 250V a.c. | PX0675<br>PX0675/PC<br>PX0675/PC/12599<br>PX0793 (Shuttered)<br>PX0793/1 (Shuttered) | PX0695<br>PX0695/PC<br>PX0783<br>(Shuttered)<br>PX0716<br>PX0717<br>PX0718 | | | | |
| 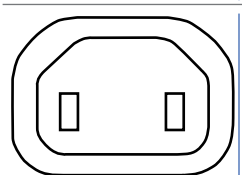 | H | 2 | 10A, 250V a.c. | PX0705 | PX0725 | | | | |
| 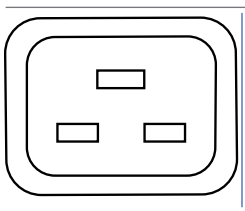 | J | 3 | 16A, 250V a.c. | PX0591 | PX0592 | | | | |

## IEC60320 MAINS CONNECTORS & PLUG CONNECTORS - CABLE MOUNTING

| IEC60 320-1 | Sheet No. | No. Pins | Current Rating | Rewirable | Side Entry Rewirable |
|---|---|---|---|---|---|
| 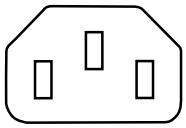 | C13 | 3 | 10A, 250V a.c. | PX0587<br>PX0588 | PX0587/SE |
| 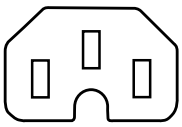 | C15 | 3 | 10A, 250V a.c. | PX0597 | |
| 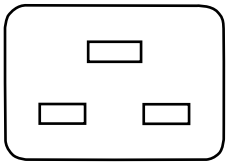 | C19 | 3 | 16A, 250V a.c. | PX0599 | |

| IEC60 320-2-2 | Sheet No. | No. Pins | Current Rating | Rewirable | Side Entry Rewirable |
|---|---|---|---|---|---|
| 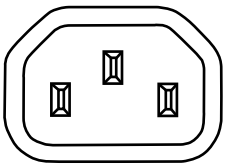 | E | 3 | 10A, 250V a.c. | PX0686 | PX0685<br>PX0686/SE |

# EN60 320-1 Standard Sheet C13 Class I Rewirable Cold Condition

## STRAIGHT FEMALE CONNECTOR

- Cable Mounting
- Rewirable
- Screw Terminals
- 10A, 250V a.c.

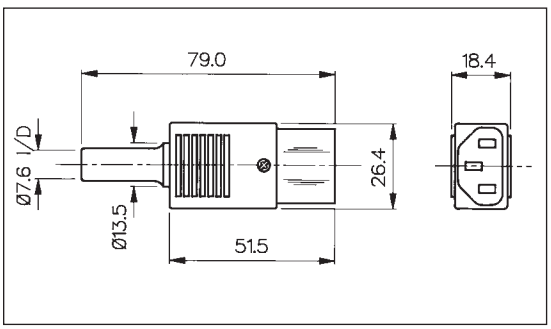


## SIDE ENTRY FEMALE CONNECTOR

- Cable Mounting
- Rewirable
- Screw Terminals
- 10A, 250V a.c.

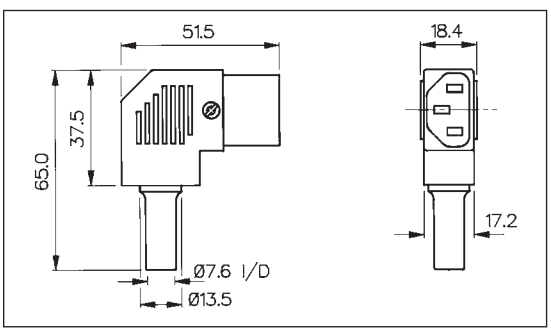


## ANGLED FEMALE CONNECTOR

- Cable Mounting
- Rewirable
- Screw Terminals
- 10A, 250V a.c.

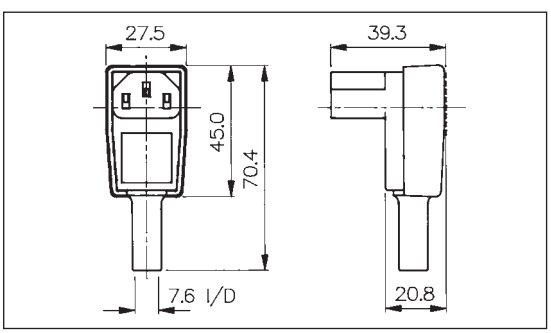


| Specification | PX0587/Col | PX0587/SE/Col | PX0588 |
|---|---|---|---|
| Terminations: | Screw Terminals | Screw Terminals | Screw Terminals |
| Colours: | No suffix (Black), /WH (White), /GY (Grey) | No suffix (Black), /WH (White), /GY (Grey) | - |
| Max. Rating: | 10A, 250V a.c. | 10A, 250V a.c. | 10A, 250V a.c. |
| Contact Resistance: | <10mΩ | <10mΩ | <10mΩ |
| Insulation Resistance: | >$10^3$ MΩ | >$10^3$ MΩ | >$10^3$ MΩ |
| A.C. Breakdown: | Pole-Pole 4.5kV.<br>(Poles-Accessible) Parts 4kV | Pole-Pole 4.5kV.<br>(Poles-Accessible) Parts 4kV | Pole-Pole 5kV.<br>(Poles-Accessible) Parts 3.5kV |
| Operating Temp. Range: | –40°C to +70°C | –40°C to +70°C | –40°C to +70°C |
| Withdrawal Force: | 10N (Min.) 50N (Max.) | 10N (Min.) 50N (Max.) | 10N (Min.) 50N (Max.) |
| Mouldings: | Nylon, Flammability Rating UL94V-0 | Nylon, Flammability Rating UL94V-0 | Nylon, Flammability Rating UL94V-0 |
| Contacts: | Brass, Clean | Brass, Clean | Brass, Clean |
| Approvals: | | | |
| Accessories / Notes: | | | |
| Mating Inlets: | PX0575, PX0579, PX0580, PF0001, PF0011, PF0030, PF0033 | PX0575, PX0579, PX0580, PF0001, PF0011, PF0030, PF0033 | PX0575, PX0579, PX0580, PF0001, PF0011, PF0030, PF0033 |
| RoHS | Compliant | Compliant | Compliant |

## EN60 320-1 Standard Sheet C14 Class I Cold Condition

### SNAP FIT TO PANEL INLET

- Fits Panel Sizes 1, 1.5, 2.0 or 3.0mm
- 2.8, 4.8, 6.3mm Tabs or Screw Terminals
- 10A, 250V a.c. (15A, 250V a.c. UL & CSA)

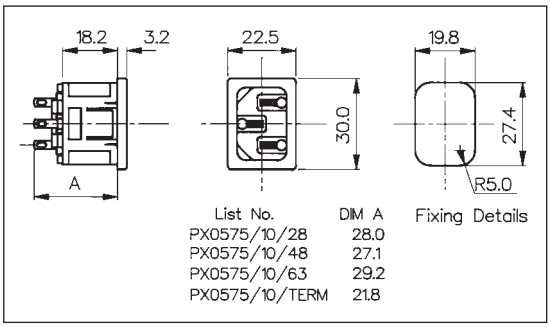


### PC SNAP FIT TO PANEL INLET

- Fits Panel Sizes 1, 1.5, 2.0 or 3.0mm
- PC Spills
- 10A, 250V a.c. (15A, 250V a.c. UL & CSA)

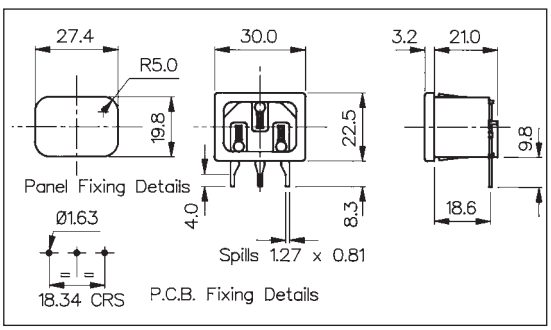


| Specification | PX0575/Panel/Term/Col | PX0575/Panel/PC/Col |
|---|---|---|
| Fixing(Panel): | Snap fit, /10 (1mm), /15 (1.5mm), /20 (2mm), /30 (3mm) | Snap fit, /10 (1mm), /15 (1.5mm), /20 (2mm), /30 (3mm) |
| Terminations: | /28 (2.8mm solder), /48 (4.8mm tab) /63 (6.3mm tab), /TERM (screw) | P.C. Spills |
| Colours: | No suffix (Black), /WH (White), /GY (Grey) | No suffix (Black), /WH (White), /GY (Grey) |
| Max. Rating: | 10A, 250V a.c. (UL & CSA 15A, 250V a.c.) | 10A, 250V a.c. (UL & CSA 15A, 250V a.c.) |
| Contact Resistance: | <10mΩ | <10mΩ |
| Insulation Resistance: | >$10^3$ MΩ | >$10^3$ MΩ |
| A.C. Breakdown: | Pole-Pole 5kV. Poles-Panel 5.4kV | Pole-Pole 5kV. Poles-Panel 5.4kV |
| Operating Temp. Range: | –40°C to +70°C | –40°C to +70°C |
| Max. Pin Temp.: | +70°C | +70°C |
| Mouldings: | Nylon, Flammability Rating UL94V-0 | Nylon, Flammability Rating UL94V-0 |
| Contacts: | Brass: Pins, Nickel Plated. Tabs, Tin Plated, Screw Terms, Nickel Plated | Brass: Pins, Nickel Plated. Spills, Tin Plated |
| Approvals: | | |
| Accessories / Notes: | P.No. 11328 (See Page 97) | Standard without cover. With cover add /C to P.No. |
| Mating Connectors: | PX0587, PX0587/SE, PX0588 | PX0587, PX0587/SE, PX0588 |
| RoHS | Compliant | Compliant |

# EN60 320-1 Standard Sheet C14 Class I Cold Condition

## FLANGE MOUNT INLET

- 2.8, 4.8, 6.3mm Tabs or Screw Terminals
- 10A, 250V a.c. (15A, 250V a.c. UL & CSA)

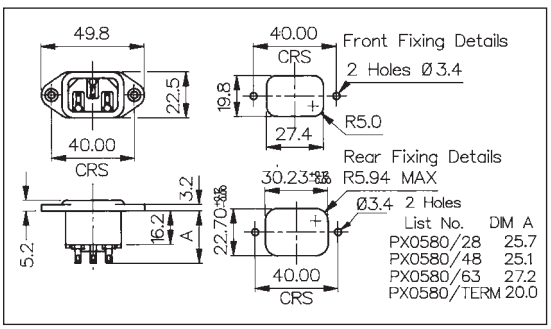


## VERTICAL FLANGE MOUNT INLET

- 2.8, 4.8, 6.3mm Tabs or Screw Terminals
- 10A, 250V a.c. (15A, 250V a.c. UL & CSA)

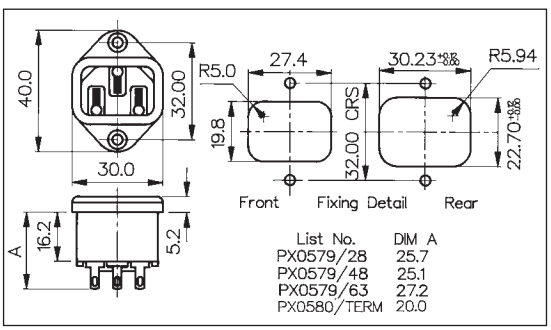


| Specification | PX0580/Term/Col | PX0579/Term/Col |
|---|---|---|
| Fixing: | Flange | Flange |
| Terminations: | /28 (2.8mm solder), /48 (4.8mm tab) /63 (6.3mm tab), /TERM (screw) | /28 (2.8mm solder), /48 (4.8mm tab) /63 (6.3mm tab) |
| Colours: | No suffix (Black), /WH (White), /GY (Grey) | No suffix (Black), /WH (White), /GY (Grey) |
| Max. Rating: | 10A, 250V a.c. (UL & CSA 15A, 250V a.c.) | 10A, 250V a.c. (UL & CSA 15A, 250V a.c.) |
| Contact Resistance: | <10mΩ | <10mΩ |
| Insulation Resistance: | >$10^3$ MΩ | >$10^3$ MΩ |
| A.C. Breakdown: | Pole-Pole 5kV. Poles-Panel 10kV | Pole-Pole 5kV. Poles-Panel 10kV |
| Operating Temp. Range: | –40°C to +70°C | –40°C to +70°C |
| Max. Pin Temp.: | +70°C | +70°C |
| Mouldings: | Nylon, Flammability Rating UL94V-0 | Nylon, Flammability Rating UL94V-0 |
| Contacts: | Brass: Pins, Nickel Plated. Tabs, Tin Plated, Screw Terms, Nickel Plated | Brass: Pins, Nickel Plated. Tabs, Tin Plated |
| Approvals: | | |
| Accessories / Notes: | P.No. 11328, KT0006 (PX0587 only) (See Pages 95 and 97) | P.No. 11328 (See Page 97) |
| Mating Connectors: | PX0587, PX0587/SE, PX0588 | PX0587, PX0587/SE, PX0588 |
| RoHS | Compliant | Compliant |

## EN60 320-1 Standard Sheet C14 Class I Cold Condition

### PC FLANGE REAR MOUNT INLET

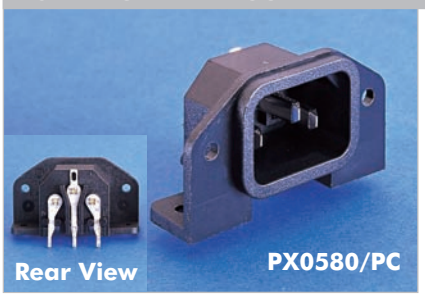


- With or Without Rear Cover
- PC Spills
- 10A, 250V a.c.
  (15A, 250V a.c. UL & CSA)

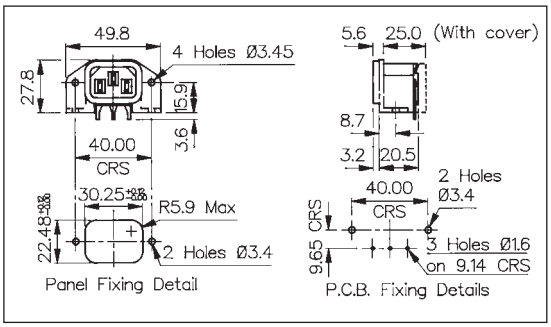


### PC FLANGE REAR MOUNT INLET

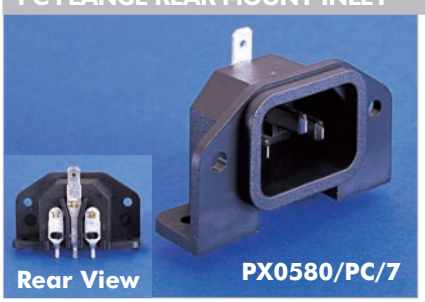


- With or Without Cover
- PC Spills
- 4.8mm Top Tab (earth)
- 10A, 250V a.c.
  (15A, 250V a.c. UL & CSA)

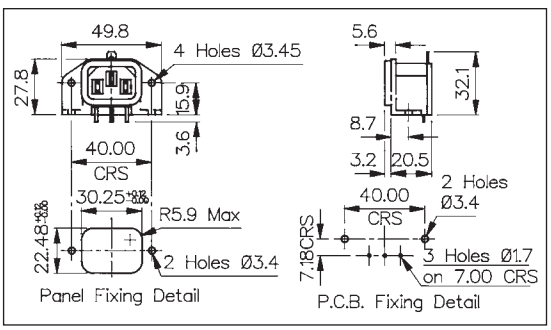


| Specification | PX0580/PC/Col | PX0580/PC/7/Col |
|---|---|---|
| Fixing: | P.C.B./Flange | P.C.B./Flange |
| Terminations: | P.C. Spills | P.C. Spills |
| Colours: | No suffix (Black), /WH (White), /GY (Grey) | No suffix (Black), /WH (White), /GY (Grey) |
| Max. Rating: | 10A, 250V a.c.<br>(UL & CSA 15A, 250V a.c.) | 10A, 250V a.c.<br>(UL & CSA 15A, 250V a.c.) |
| Contact Resistance: | <10mΩ | <10mΩ |
| Insulation Resistance: | >$10^3$ MΩ | >$10^3$ MΩ |
| A.C. Breakdown: | Pole-Pole 5.4kV. Poles-Panel 10kV | Pole-Pole 4kV. Poles-Panel 6kV |
| Operating Temp. Range: | –40°C to +70°C | –40°C to +70°C |
| Max. Pin Temp.: | +70°C | +70°C |
| Mouldings: | Nylon, Flammability Rating UL94V-0 | Nylon, Flammability Rating UL94V-0 |
| Contacts: | Brass: Pins, Nickel Plated.<br>Spills, Tin Plated | Brass: Pins, Nickel Plated. Spills, Tin Plated |
| Approvals: | | |
| Accessories / Notes: | Standard without cover.<br>With cover add /12132 to P.No. | Standard with cover.<br>Without cover add LC to P.No. |
| Mating Connectors: | PX0587, PX0587/SE, PX0588 | PX0587, PX0587/SE, PX0588 |
| RoHS | Compliant | Compliant |

# EN60 320-1 Standard Sheet C14 Class I Cold Condition (Fused)

## FLANGE MOUNT FUSED INLET

- Single Fuse 5 x 20mm
- Spare Fuse Facility
- 2.8, 4.8 or 6.3mm Tabs
- 10A, 250V a.c.
- Fuse Contacts Isolated (PF0002)

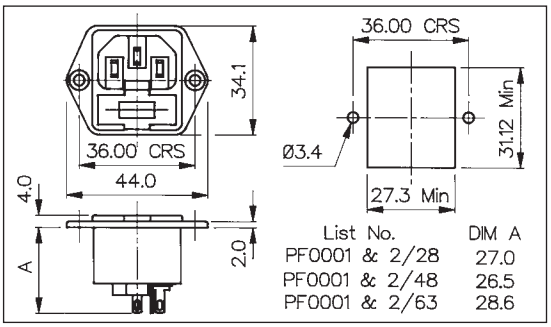


## PC FLANGE MOUNT FUSED INLET

- Single Fuse 5 x 20mm
- Spare Fuse Facility
- PC Spills - Horizontal
- 10A, 250V a.c.

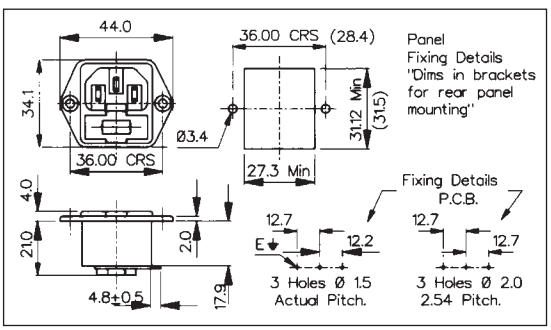


| Specification | PF0001/Term/Col | PF0001/PC/Col | PF0002/Term/Col |
|---|---|---|---|
| Fixing: | Flange | P.C.B./Flange | Flange |
| Terminations: | /28 (2.8mm solder), /48 (4.8mm tab) /63 (6.3mm tab) | P.C. Spills | /28 (2.8mm solder), /48 (4.8mm tab) /63 (6.3mm tab) |
| Colours: | No suffix (Black), /WH (White), /GY (Grey) | No suffix (Black), /WH (White), /GY (Grey) | No suffix (Black), /WH (White), /GY (Grey) |
| Max. Rating: | 10A, 250V a.c. | 10A, 250V a.c. | 10A, 250V a.c. |
| Max. Fuse Rating: | 2.5W/10A, 250V a.c. | 2.5W/10A, 250V a.c | 2.5W/10A, 250V a.c |
| Contact Resistance: | <10mΩ (<15mΩ including Fuseholder) | <10mΩ (<15mΩ including Fuseholder) | <10mΩ |
| Insulation Resistance: | $>10^3$ MΩ | $>10^3$ MΩ | $>10^3$ MΩ |
| A.C. Breakdown: | Pole-Pole 5.5kV. Poles-Panel 4kV | Pole-Pole 5.5kV. Poles-Panel 4kV | Pole-Pole 5.5kV. Poles-Panel 4kV |
| Operating Temp. Range: | –40°C to +70°C | –40°C to +70°C | –40°C to +70°C |
| Max. Pin Temp.: | +70°C | +70°C | +70°C |
| Mouldings: | Nylon, Flammability Rating UL94V-0 | Nylon, Flammability Rating UL94V-0 | Nylon, Flammability Rating UL94V-0 |
| Contacts: | Brass: Pins, Nickel Plated. Tabs, Tin Plated | Brass: Pins, Nickel Plated. Tabs, Tin Plated | Brass: Pins, Nickel Plated. Tabs, Tin Plated |
| Approvals: | | | |
| Accessories / Notes: | P.No. 11987, KT0009 (See Pages 95 & 97) | KT0009 (front of panel mounting only) (See Page 95) | P.No. 11987, KT0009 (See Pages 95 & 97) (Note: Fuse contact isolated) |
| Mating Connectors: | PX0587, PX0587/SE, PX0588 | PX0587, PX0587/SE, PX0588 | PX0587, PX0587/SE, PX0588 |
| RoHS | Compliant | Compliant | Compliant |

# EN60 320-1 Standard Sheet C14 Class I Cold Condition (Fused)

## SNAP FIT TO PANEL FUSED INLET

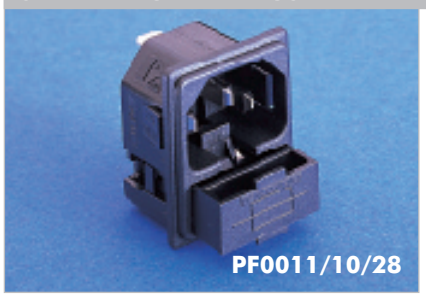


- Single Fuse 5 x 20mm
- Spare Fuse Facility
- Panel Sizes 1, 1.5, 2.0 or 3.0mm
- 2.8, 4.8 or 6.3mm Tabs
- 10A, 250V a.c.

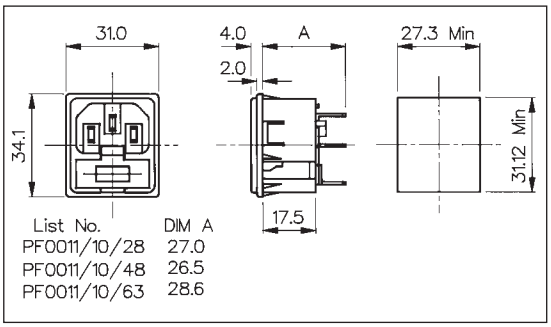


## PC SNAP FIT TO PANEL FUSED INLET

- Single Fuse 5 x 20mm
- Spare Fuse Facility
- Panel Sizes 1, 1.5, 2.0 or 3.0mm
- PC Spills
- 10A, 250V a.c.

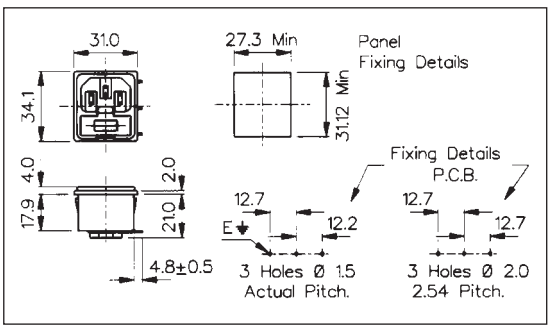


| Specification | PF0011/Panel/Term/Col | PF0011/Panel/PC/Col |
|---|---|---|
| Fixing(Panel): | Snap fit, /10 (1mm), /15 (1.5mm), /20 (2mm), /30 (3mm) | Snap fit, /10 (1mm), /15 (1.5mm), /20 (2mm), /30 (3mm) |
| Terminations: | /28 (2.8mm solder), /48 (4.8mm tab) /63 (6.3mm tab) | P.C. Spills |
| Colours: | No suffix (Black), /WH (White), /GY (Grey) | No suffix (Black), /WH (White), /GY (Grey) |
| Max. Rating: | 10A, 250V a.c. | 10A, 250V a.c. |
| Max. Fuse Rating: | 2.5W/10A, 250V a.c | 2.5W/10A, 250V a.c |
| Contact Resistance: | <10mΩ (<15mΩ including Fuseholder) | <10mΩ (<15mΩ including Fuseholder) |
| Insulation Resistance: | $>10^3$ MΩ | $>10^3$ MΩ |
| A.C. Breakdown: | Pole-Pole 5.5kV. Poles-Panel 4kV | Pole-Pole 5.5kV. Poles-Panel 4kV |
| Operating Temp. Range: | –40°C to +70°C | –40°C to +70°C |
| Max. Pin Temp.: | +70°C | +70°C |
| Mouldings: | Nylon, Flammability Rating UL94V-0 | Nylon, Flammability Rating UL94V-0 |
| Contacts: | Brass: Pins, Nickel Plated. Tabs, Tin Plated | Brass: Pins, Nickel Plated. Spills, Tin Plated |
| Approvals: | | |
| Accessories / Notes: | P.No. 11987 (See Page 97) | |
| Mating Connectors: | PX0587, PX0587/SE, PX0588 | PX0587, PX0587/SE, PX0588 |
| RoHS | Compliant | Compliant |

# EN60 320-1 Standard Sheet C14 Class I Cold Condition (Fused, Twin)

## FLANGE MOUNT FUSED INLET

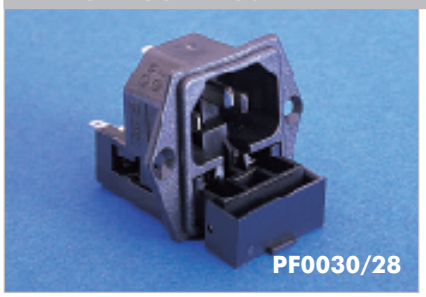


- Twin Fused 5 x 20mm
- 2.8, 4.8 or 6.3mm Tabs
- 10A, 250V a.c.

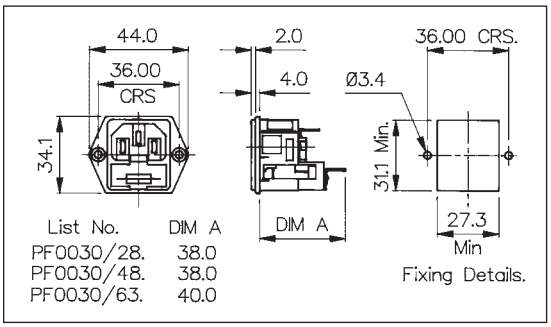


## PC FLANGE MOUNT FUSED INLET

- Twin Fused 5 x 20mm
- PC Spills
- 10A, 250V a.c.

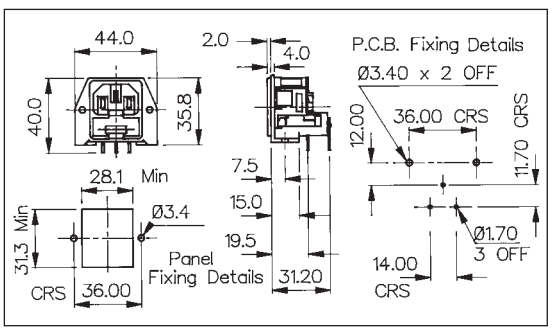


## SNAP FIT TO PANEL FUSED INLET

- Twin Fused 5 x 20mm
- Fits Panel Sizes 1.0, 1.5, 2.0 or 3.0mm
- 2.8, 4.8 or 6.3mm Tabs
- 10A, 250V a.c.

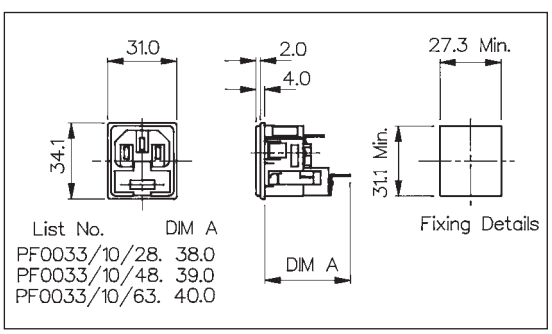


| Specification | PF0030/Termination | PF0030/PC | PF0033/Panel/Termination |
|---|---|---|---|
| Fixing (Panel): | Flange | P.C.B/Flange | Snap fit, /10 (1mm), /15 (1.5mm), /20 (2mm), /30 (3mm) |
| Terminations: | /28 (2.8mm solder), /48 (4.8mm tab) /63 (6.3mm tab) | P.C. Spills | /28 (2.8mm solder), /48 (4.8mm tab) /63 (6.3mm tab) |
| Max. Rating: | 10A, 250V a.c. | 10A, 250V a.c. | 10A, 250V a.c. |
| Contact Resistance: | <15mΩ (per pole) | <15mΩ (per pole) | <15mΩ (per pole) |
| Insulation Resistance: | $>10^4$ MΩ | $>10^4$ MΩ | $>10^4$ MΩ |
| A.C. Breakdown: | Pole-Pole 6kV. Poles-Panel 5kV | Pole-Pole 6kV. Poles-Panel 5kV | Pole-Pole 6kV. Poles-Panel 5kV |
| Max. Dissipation Per Fuse: | 2.5W | 2.5W | 2.5W |
| Operating Temp. Range: | –20°C to +70°C | –20°C to +70°C | –20°C to +70°C |
| Max. Pin Temp.: | +70°C | +70°C | +70°C |
| Mouldings: | Nylon, Flammability Rating UL94V-0 | Nylon, Flammability Rating UL94V-0 | Nylon, Flammability Rating UL94V-0 |
| Contacts: | Brass: Pins, Nickel Plated. Tabs, Tin Plated | Brass: Pins, Nickel Plated. Tabs, Tin Plated | Brass: Pins, Nickel Plated. Tabs, Tin Plated |
| Approvals: | | | |
| Accessories / Notes: | KT0009 (See Page 95) | | |
| Mating Connectors: | PX0587, PX0587/SE, PX0588 | PX0587, PX0587/SE, PX0588 | PX0587, PX0587/SE, PX0588 |
| RoHS | Compliant | Compliant | Compliant |

# EN60 320-1 Standard Sheet C15 Class I & Standard Sheet C16 Class I Hot Condition

## STRAIGHT FEMALE CONNECTOR

- Cable Mounting
- Hot Condition
- Mates with PX0590 and PX0595
- Screw Terminals
- 10A, 250V a.c.

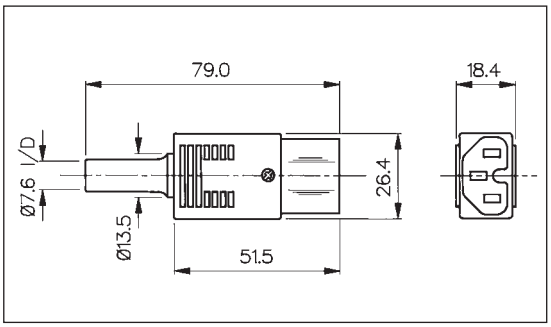


## FLANGE MOUNT INLET

- Hot Condition
- 2.8 or 6.3mm Tabs
- 10A, 250V a.c. (15A, 250V a.c. UL & CSA)

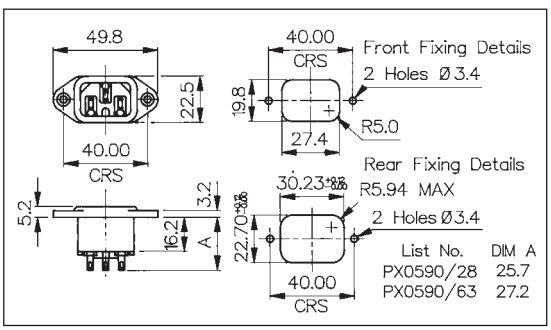


## SNAP FIT TO PANEL INLET

- Hot Condition
- Panel Sizes 1, 1.5, 2.0 or 3.0mm
- 2.8, 4.8, 6.3mm Tabs or Screw Terminals
- 10A, 250V a.c. (15A, 250V a.c. UL & CSA)

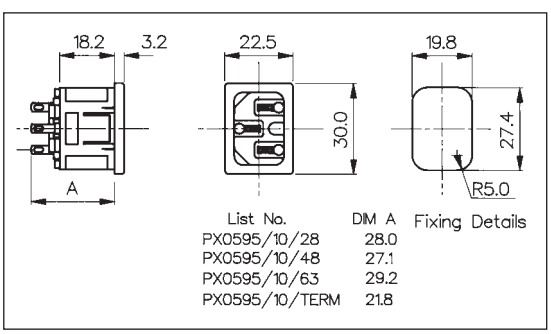


| Specification | PX0597/Col | PX0590/Term/Col | PX0595/Panel/Term/Col |
|---|---|---|---|
| Fixing (Panel): | | Flange | Snap fit, /10 (1mm), /15 (1.5mm), /20 (2mm), /30 (3mm) |
| Terminations: | Screw Terminals | /28 (2.8mm solder), /63 (6.3mm tab) | /28 (2.8mm solder), /48 (4.8mm tab) /63 (6.3mm tab), /TERM (screw) |
| Colours: | No suffix (Black), /WH (White), /GY (Grey) | No suffix (Black), /WH (White), /GY (Grey) | No suffix (Black), /WH (White), /GY (Grey) |
| Max. Rating: | 10A, 250V a.c. | 10A, 250V a.c. (UL & CSA 15A, 250V a.c.) | 10A, 250V a.c. (UL & CSA 15A, 250V a.c.) |
| Contact Resistance: | <10mΩ | <10mΩ | <10mΩ |
| Insulation Resistance: | >$10^3$ MΩ | >$10^3$ MΩ | >$10^3$ MΩ |
| A.C. Breakdown: | Pole-Pole 4.5kV. Poles-Accessible Parts 4kV | Pole-Pole 5kV. Poles-Panel 10kV | Pole-Pole 5kV. Poles-Panel 5.4kV |
| Operating Temp. Range: | –40°C to +70°C | –40°C to +70°C | –40°C to +70°C |
| Max. Pin Temp.: | | +120°C | +120°C |
| Withdrawal Force: | 10N (Min.) 50N (Max.) | | |
| Mouldings: | Nylon, Flammability Rating UL94V-0 | Nylon, Flammability Rating UL94V-0 | Nylon, Flammability Rating UL94V-0 |
| Contacts: | Brass, Clean | Brass, Pins Nickel Plated. Tabs, Tin Plated | Brass, Pins Nickel Plated. Tabs, Tin Plated |
| Approvals: | | | |
| Accessories/Notes: | | P.No. 11328, KT0006 (See Pages 95 & 97) | P.No. 11328 (See Page 97) |
| Mating Connectors: | PX0590, PX0595 | PX0597 | PX0597 |
| RoHS | Compliant | Compliant | Compliant |

# EN60 320-1 Standard Sheet C18 Class II Cold Condition

## FLANGE MOUNT INLET

- Two Pin Class II (No Earth Pin)
- 2.8, 4.8, 6.3mm Tabs or Screw Terminals
- 10A, 250V a.c. (15A, 250V a.c. UL & CSA)

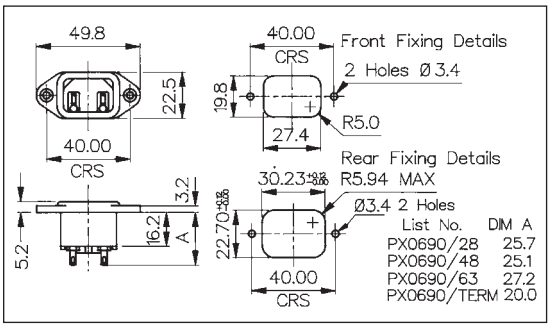


## SNAP FIT TO PANEL INLET

- Two Pin Class II (No Earth Pin)
- Panel Sizes 1, 1.5, 2.0 or 3.0mm
- 2.8, 4.8, 6.3mm Tabs or Screw Terminals
- 10A, 250V a.c. (15A, 250V a.c. UL & CSA)

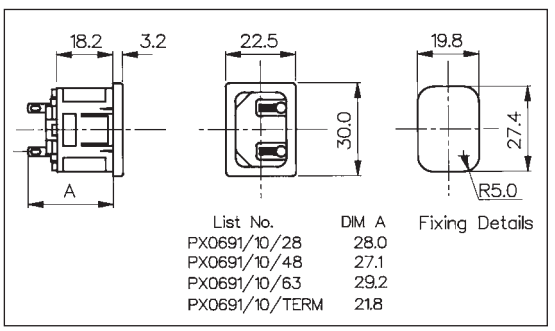


## PC SNAP FIT TO PANEL INLET

- Two Pin Class II (No Earth Pin)
- Panel Sizes 1, 1.5, 2.0 or 3.0mm
- PC Spills
- 10A, 250V a.c. (15A, 250V a.c. UL & CSA)

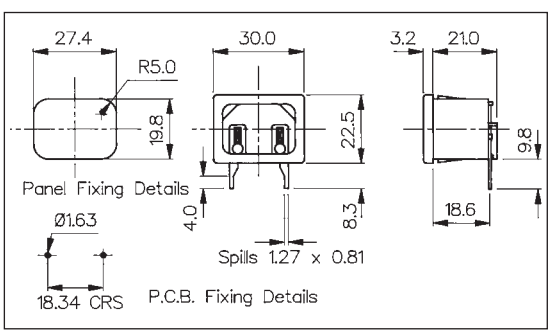


| Specification | PX0690/Term/Col | PX0691/Panel/Term/Col | PX0691/Panel/PC/Col |
|---|---|---|---|
| Fixing(Panel): | Flange | Snap fit, /10 (1mm), /15 (1.5mm), /20 (2mm), /30 (3mm) | Snap fit, /10 (1mm), /15 (1.5mm), /20 (2mm), /30 (3mm) |
| Terminations: | /28 (2.8mm solder), /48 (4.8mm tab) /63 (6.3mm tab), /TERM (screw) | /28 (2.8mm solder), /48 (4.8mm tab) /63 (6.3mm tab), /TERM (screw) | P.C. Spills |
| Colours: | No suffix (Black), /WH (White), /GY (Grey) | No suffix (Black), /WH (White), /GY (Grey) | No suffix (Black), /WH (White), /GY (Grey) |
| Max. Rating: | 10A, 250V a.c. (UL & CSA 15A, 250V a.c.) | 10A, 250V a.c. (UL & CSA 15A, 250V a.c.) | 10A, 250V a.c. (UL & CSA 15A, 250V a.c.) |
| Contact Resistance: | <10mΩ | <10mΩ | <10mΩ |
| Insulation Resistance: | >$10^3$ MΩ | >$10^3$ MΩ | >$10^3$ MΩ |
| A.C. Breakdown: | Pole-Pole 5kV. Poles-Panel 10kV | Pole-Pole 5kV. Poles-Panel 5.4kV | Pole-Pole 5kV. Poles-Panel 5.4kV |
| Operating Temp. Range: | –40°C to +70°C | –40°C to +70°C | –40°C to +70°C |
| Max. Pin Temp.: | +70°C | +70°C | +70°C |
| Mouldings: | Nylon, Flammability Rating UL94V-0 | Nylon, Flammability Rating UL94V-0 | Nylon, Flammability Rating UL94V-0 |
| Contacts: | Brass: Pins, Nickel Plated. Tabs, Tin Plated, Screw Terms, Nickel Plated | Brass: Pins, Nickel Plated. Tabs, Tin Plated, Screw Terms, Nickel Plated | Brass: Pins, Nickel Plated. Spills, Tin Plated |
| Approvals: | | | |
| Accessories / Notes: | P.No. 11328 (See Page 97) | P.No. 11328 (See Page 97) | Standard without cover. With cover add /C to P.No. |
| Mating Connectors: | | | |
| RoHS | Compliant | Compliant | Compliant |

# EN60 320-1 Standard Sheet C18 Class II Cold Condition (Fused)

## FLANGE MOUNT FUSED INLET

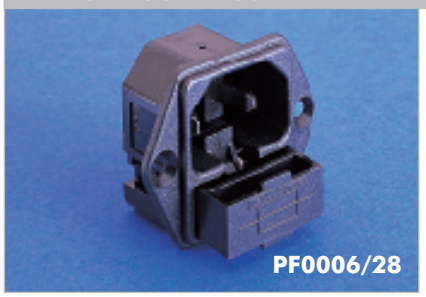


- Single Fuse 5 x 20mm
- Two Pin Class II (No Earth Pin)
- 2.8, 4.8 or 6.3mm Tabs
- 10A, 250V a.c.

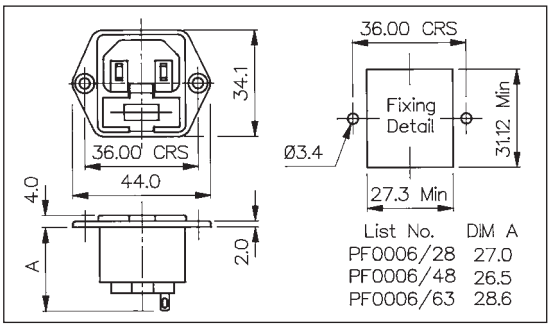


## FLANGE MOUNT FUSED INLET

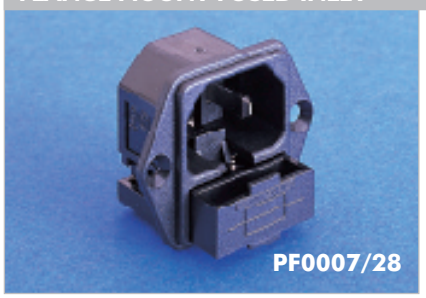


- Single Fuse 5 x 20mm (Fuse Contacts Isolated)
- Two Pin Class II (No Earth Pin)
- 2.8, 4.8 or 6.3mm Tabs
- 10A, 250V a.c.

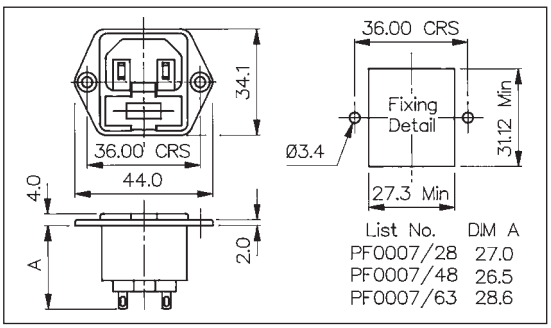


## SNAP FIT TO PANEL FUSED INLET

- Single Fuse 5 x 20mm
- Two Pin Class II (No Earth Pin)
- Fits Panel Sizes 1.0, 1.5, 2.0 or 3.0mm
- 2.8, 4.8 or 6.3mm Tabs
- 10A, 250V a.c.

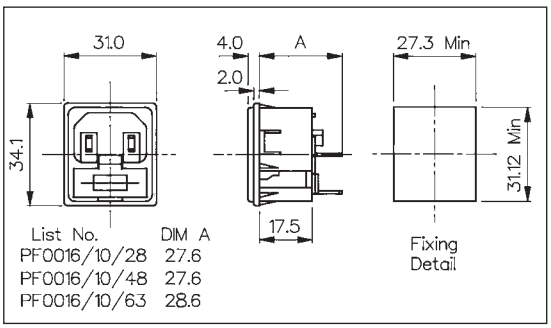


| Specification | PF0006/Term/Col | PF0007/Term/Col | PF0016/Panel/Term/Col |
|---|---|---|---|
| Fixing (Panel): | Flange | Flange | Snap fit, /10 (1mm), /15 (1.5mm), /20 (2mm), /30 (3mm) |
| Terminations: | /28 (2.8mm solder), /48 (4.8mm tab) /63 (6.3mm tab) | /28 (2.8mm solder), /48 (4.8mm tab) /63 (6.3mm tab) | /28 (2.8mm solder), /48 (4.8mm tab) /63 (6.3mm tab) |
| Colours: | No suffix (Black), /WH (White), /GY (Grey) | No suffix (Black), /WH (White), /GY (Grey) | No suffix (Black), /WH (White), /GY (Grey) |
| Max. Rating: | 10A, 250V a.c. | 10A, 250V a.c. | 10A, 250V a.c. |
| Contact Resistance: | <10mΩ (<15mΩ including Fuseholder) | <10mΩ | <10mΩ (<15mΩ including Fuseholder) |
| Insulation Resistance: | $>10^3$ MΩ | $>10^3$ MΩ | $>10^3$ MΩ |
| A.C. Breakdown: | Pole-Pole 5.5kV. Poles-Panel 4kV | Pole-Pole 5.5kV. Poles-Panel 4kV | Pole-Pole 5.5kV. Poles-Panel 4kV |
| Operating Temp. Range: | –40°C to +70°C | –40°C to +70°C | –40°C to +70°C |
| Max. Pin Temp.: | +70°C | +70°C | +70°C |
| Mouldings: | Nylon, Flammability Rating UL94V-0 | Nylon, Flammability Rating UL94V-0 | Nylon, Flammability Rating UL94V-0 |
| Contacts: | Brass: Pins, Nickel Plated. Tabs, Tin Plated | Brass: Pins, Nickel Plated. Tabs, Tin Plated | Brass: Pins, Nickel Plated. Tabs, Tin Plated |
| Approvals: | | | |
| Accessories / Notes: | P.No. 11987 (See Page 97) | P.No. 11987 (See Page 97) (Note: Fuse contacts isolated) | P.No. 11987 (See Page 97) |
| Mating Connectors: | | | |
| RoHS | Compliant | Compliant | Compliant |

# EN60 320-2-2 Standard Sheet E Class I Rewirable

## ANGLED MALE CONNECTOR

- Cable Mounting
- Four Position Cable Entry
- Rewirable
- Screw Terminals
- 10A, 250V a.c.

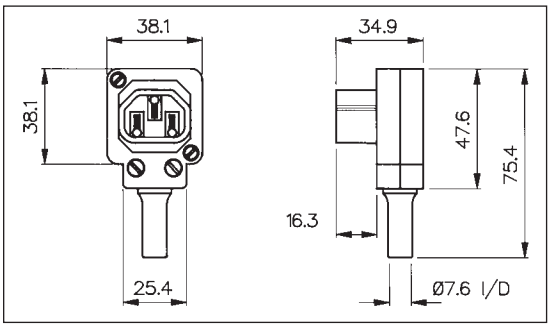


## STRAIGHT MALE CONNECTOR

- Cable Mounting
- Rewirable
- Screw Terminals
- 10A, 250V a.c.

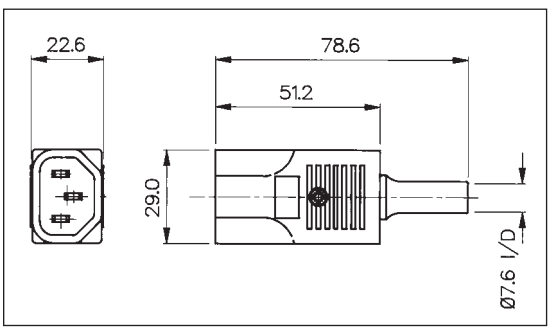


## SIDE ENTRY MALE CONNECTOR

- Cable Mounting
- Rewirable
- Screw Terminals
- 10A, 250V a.c.

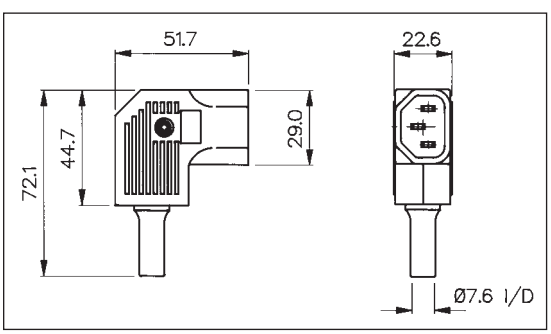


| Specification | PX0685/Col | PX0686/Col | PX0686/SE/Col |
|---|---|---|---|
| Terminations: | Screw Terminals | Screw Terminals | Screw Terminals |
| Max. Rating: | 10A, 250V a.c. | 10A, 250V a.c. | 10A, 250V a.c. |
| Colours: | No suffix (Black), /WH (White), /GY (Grey) | No suffix (Black), /WH (White), /GY (Grey) | No suffix (Black), /WH (White), /GY (Grey) |
| Contact Resistance: | <10mΩ | <10mΩ | <10mΩ |
| Insulation Resistance: | >$10^4$ MΩ | >$10^4$ MΩ | >$10^4$ MΩ |
| A.C. Breakdown: | Pole-Pole 5.2kV.<br>Poles-Accessible Parts 6kV | Pole-Pole 5kV.<br>Poles-Accessible Parts 5kV | Pole-Pole 5kV.<br>Poles-Accessible Parts 5kV |
| Operating Temp. Range: | –40°C to +70°C | –40°C to +70°C | –40°C to +70°C |
| Withdrawal Force: | 10N (Min.) 50N (Max.) | 10N (Min.) 50N (Max.) | 10N (Min.) 50N (Max.) |
| Mouldings: | Nylon, Flammability Rating UL94V-0 | Nylon, Flammability Rating UL94V-0 | Nylon, Flammability Rating UL94V-0 |
| Contacts: | Brass, Nickel Plated. | Brass, Nickel Plated. | Brass, Nickel Plated. |
| Approvals: | | | |
| Accessories / Notes: | Unique octagon module allows choice of 4 cable positions | | |
| Mating Outlets: | PX0675, PX0695, PX0578, PX0783, PX0793, PX0793/1 | PX0675, PX0695, PX0578, PX0783, PX0793, PX0793/1, PX0716, PX0717 & PX0718 | PX0675, PX0695, PX0578, PX0783, PX0793, PX0793/1, PX0716, PX0717 & PX0718 |
| RoHS | Compliant | Compliant | Compliant |

# EN60 320-1 Standard Sheet C14 Class I Cold Condition & EN60 320-2-2 Standard Sheet F Class I Cold Condtion

## SNAP FIT TO PANEL INLET/OUTLET

- Inlet/Outlet combination
- Panel Size1.2mm
- 4.8mm tabs
- 10A, 250V a.c.
  (15A, 250V a.c. UL & CSA)

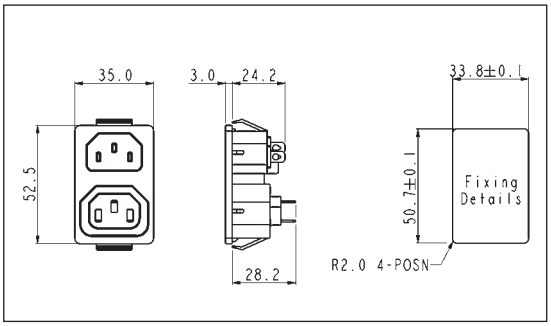


## SNAP FIT TO PANEL FUSED INLET/OUTLET

- Fused Inlet/Outlet combination
- 1-6 outlet versions
- Panel Size 1.5mm
- Terminals:
  inlet: 4.8mm tabs
  outlet: solder tags
- 10A, 250V a.c.
  (15A, 250V a.c. UL)
- All outlet terminals linked, common earth throughout

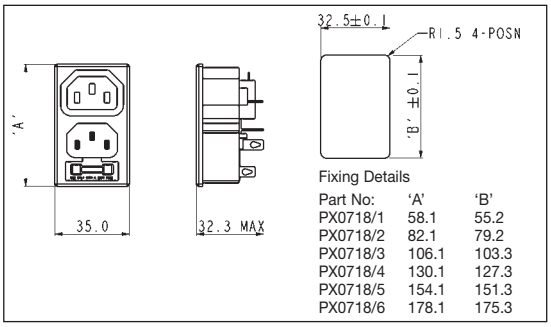


Fixing Details

| Part No: | 'A' | 'B' |
|---|---|---|
| PX0718/1 | 58.1 | 55.2 |
| PX0718/2 | 82.1 | 79.2 |
| PX0718/3 | 106.1 | 103.3 |
| PX0718/4 | 130.1 | 127.3 |
| PX0718/5 | 154.1 | 151.3 |
| PX0718/6 | 178.1 | 175.3 |

| Specification | PX0716/Termination | PX0718/x/15/Termination |
|---|---|---|
| Fixing: | Snap fit 1.2mm accommodation | Snap fit 1.5mm accommodation |
| Terminations: | /48 (4.8mm tab) | /ST (outlet solder tag, inlet 4.8mm tab) |
| Max. Rating: | 10A, 250V a.c.<br>(UL 15A, 125V a.c.) | 10A, 250V a.c.<br>(UL 15A, 250V a.c.) |
| Insulation Resistance: | >100MΩ (500V d.c., 1 min.) | >100MΩ (500V d.c., 1 min.) |
| Dielectric Strength: | 2kV (50Hz, 1 min.) | 2kV (50Hz, 1 min.) |
| Operating Temp. Range: | –20°C to +70°C | –20°C to +70°C |
| Max. Pin Temp.: | +70°C | +70°C |
| Mouldings: | Nylon 66, Flammability Rating UL94V-0 | Glass filled Thermoplastic, UL94V-0 |
| Contacts: | Brass, Tin Plated | Brass, Tin Plated |
| Approvals: | c UL us | c UL us |
| Accessories / Notes: | - | - |
| Mates with: | PX0587, PX0587/SE, PX0588, PX0686, PX0686/SE | PX0587, PX0587/SE, PX0588, PX0686, PX0686/SE |
| RoHS | Compliant | Compliant |

# EN60 320-2-2 Standard Sheet F Class I

## SNAP FIT TO PANEL OUTLET

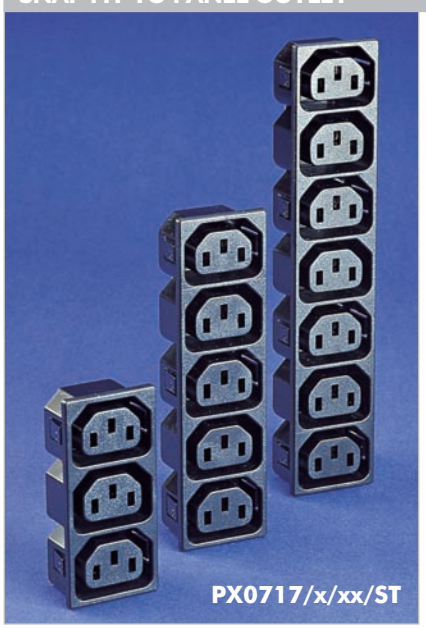


- Snap Fit to Panel
- Panel Size 1.5mm
- Solder Tabs
- 10A, 250V a.c. (15A, 250V a.c. UL)
- All Terminals Linked

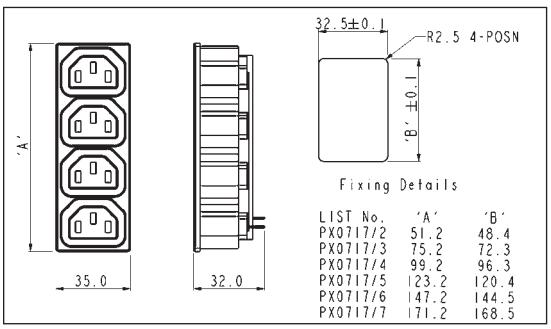


## FLANGE MOUNT OUTLET

- Front of Panel Mount
- 6.3mm tabs
- 10A, 250V a.c. (15A, 250V a.c. UL)

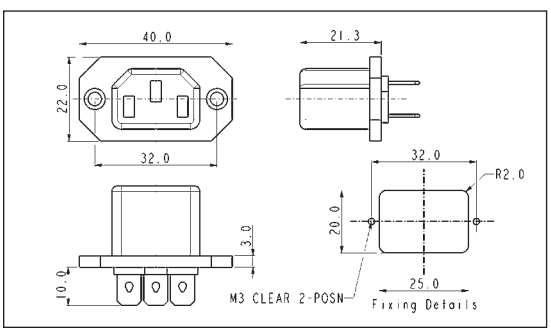


| Specification | PX0717/x/15/Termination | PX0578/Termination |
|---|---|---|
| Fixing: | Snap fit 1.5mm accommodation | Flange |
| Terminations: | /ST (solder | /63 (6.3mm tab) |
| Max. Rating: | 10A, 250V a.c. (UL 15A, 250v a.c.) | 10A, 250V a.c. (UL 15A, 250v a.c.) |
| Insulation Resistance: | >100MΩ (500V d.c., 1 min.) | >100MΩ (500V d.c., 1 min.) |
| Dielectric Strength: | 2kV (50Hz, 1 min.) | 2kV (50Hz, 1 min.) |
| Operating Temp. Range: | –20°C to +70°C | –20°C to +70°C |
| Max. Pin Temp.: | - | - |
| Mouldings: | Glass filled Thermoplastic, UL94V-0 | Glass filled Thermoplastic, UL94V-0 |
| Contacts: | Brass, Tin plated | Brass, Tin plated |
| Approvals: | c UL us | c UL us |
| Accessories / Notes: | - | - |
| Mates with: | PX0686, PX0686/SE | PX0686, PX0686/SE |
| RoHS | Compliant | Compliant |

## EN60 320-2-2 Standard Sheet F Class I

### FLANGE MOUNT OUTLET

- 2.8mm or 6.3mm Tabs
- 10A, 250V a.c.
  (15A, 250V a.c. UL & CSA)

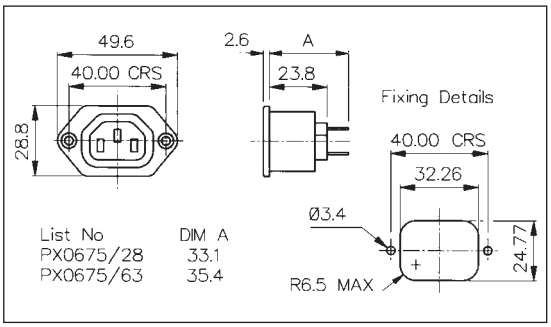


### PC FLANGE REAR MOUNT OUTLET

- PC Spills
- 10A, 250V a.c.
  (15A, 250V a.c. UL & CSA)

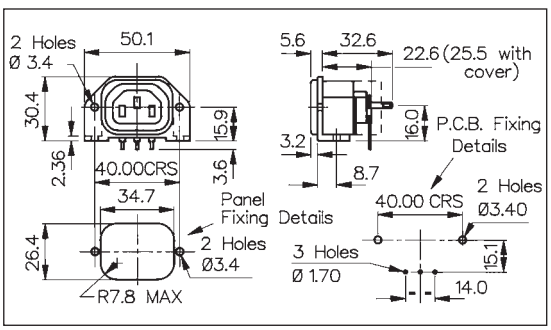


| Specification | PX0675/Term/Col | PX0675/PC/Col |
|---|---|---|
| Fixing: | Flange | P.C.B./Flange |
| Terminations: | /28 (2.8mm solder), /48 (4.8mm tab), /63 (6.3mm tab) | P.C. Spills |
| Colours: | No suffix (Black), /WH (White), /GY (Grey) | No suffix (Black), /WH (White), /GY (Grey) |
| Max. Rating: | 10A, 250V a.c.<br>(UL & CSA 15A, 250V a.c.) | 10A, 250V a.c.<br>(UL & CSA 15A, 250V a.c.) |
| Contact Resistance: | <10mΩ | <10mΩ |
| Insulation Resistance: | >$10^4$ MΩ | >$10^4$ MΩ |
| A.C. Breakdown: | Pole-Pole 7kV. Poles-Panel 9kV | Pole-Pole 4kV. Poles-Panel 9kV |
| Operating Temp. Range: | –40°C to +70°C | –40°C to +70°C |
| Mouldings: | Nylon, Flammability Rating UL94V-0 | Nylon, Flammability Rating UL94V-0 |
| Contacts: | Brass, Tin Plated | Brass, Tin Plated |
| Approvals: | UR approval does not cover 4.8mm tab option | |
| Accessories / Notes: | P.No. 12075, KT0006, 14228<br>(See Pages 95-97) | Standard without cover.<br>With cover add /12599 to P.No., 14228 (see page 96) |
| Mates with: | PX0685, PX0686, PX0686/SE | PX0685, PX0686, PX0686/SE |
| RoHS | Compliant | Compliant |

# EN60 320-2-2 Standard Sheet F Class I

## SNAP FIT TO PANEL OUTLET

- Panel Sizes 1, 1.5, 2.0 or 3.0mm
- 2.8 or 6.3mm Tabs
- 10A, 250V a.c. (15A, 250V a.c. UL & CSA)

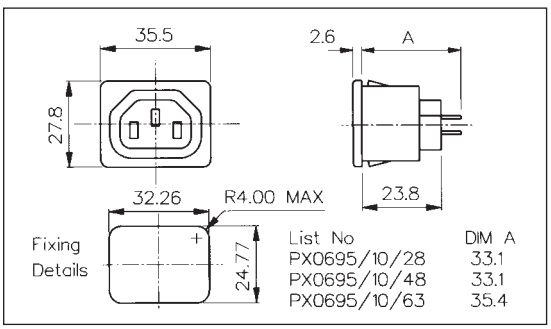


## PC SNAP FIT TO PANEL OUTLET

- Panel Sizes 1, 1.5, 2.0 or 3.0mm
- PC Spills
- 10A, 250V a.c. (15A, 250V a.c. UL & CSA)

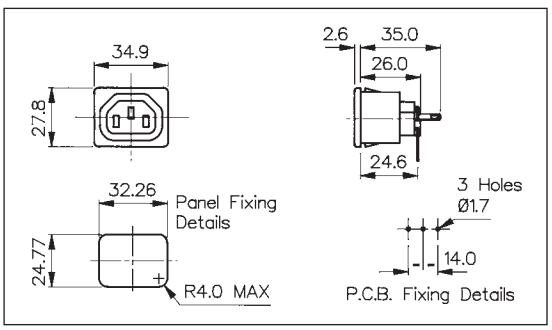




| Specification | PX0695/Panel/Term/Col | PX0695/Panel/PC/Col |
|---|---|---|
| Fixing: | Snap fit, /10 (1mm), /15 (1.5mm), /20 (2mm), /30 (3mm) | Snap fit, /10 (1mm), /15 (1.5mm), /20 (2mm), /30 (3mm) |
| Terminations: | /28 (2.8mm solder), /63 (6.3mm tab) | P.C. Spills |
| Colours: | No suffix (Black), /WH (White), /GY (Grey) | No suffix (Black), /WH (White), /GY (Grey) |
| Max. Rating: | 10A, 250V a.c. (UL & CSA 15A, 250V a.c.) | 10A, 250V a.c. (UL & CSA 15A, 250V a.c.) |
| Contact Resistance: | <10mΩ | <10mΩ |
| Insulation Resistance: | >$10^4$ MΩ | >$10^4$ MΩ |
| A.C. Breakdown: | Pole-Pole 7kV. Poles-Panel 9kV | Pole-Pole 4kV. Poles-Panel 9kV |
| Operating Temp. Range: | –40°C to +70°C | –40°C to +70°C |
| Mouldings: | Nylon, Flammability Rating UL94V-0 | Nylon, Flammability Rating UL94V-0 |
| Contacts: | Brass, Tin Plated | Brass, Tin Plated |
| Approvals: | | |
| Accessories / Notes: | P.No. 12075, 14228 (See Page 96-97) | P.No. 14228 (see page 96) |
| Mates with: | PX0685, PX0686, PX0686/SE, | PX0685, PX0686, PX0686/SE, |
| RoHS | Compliant | Compliant |

# EN60 320-2-2 Standard Sheet F Class I Shuttered

## SNAP FIT TO PANEL OUTLET

- Shuttered
- Panel Sizes 1, 1.5, 2.0 or 3.0mm
- 2.8, 4.8 or 6.3mm Tabs
- 10A, 250V a.c. (15A, 250V a.c. UL & CSA)

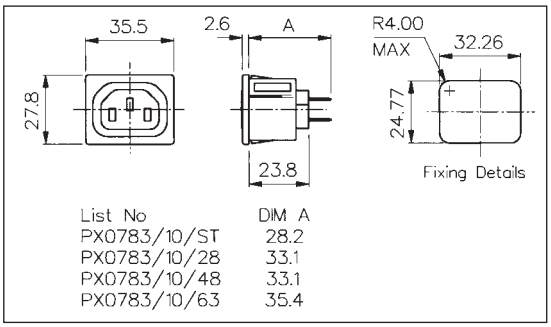


## FLANGE MOUNT OUTLET

- Shuttered
- 2.8, 4.8 or 6.3mm Tabs
- 10A, 250V a.c. (15A, 250V a.c. UL & CSA)

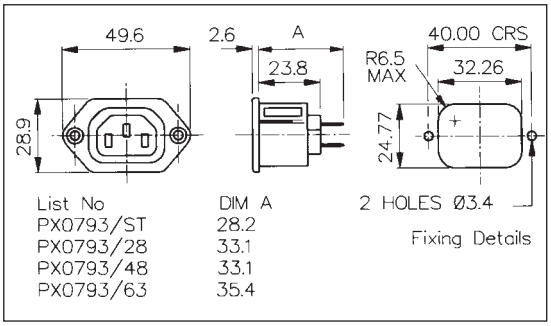


## RECTANGULAR FLANGE MOUNT OUTLET

- Shuttered
- Rectangular Flange Mount Outlet
- 2.8, 4.8 or 6.3mm Tabs
- 10A, 250V a.c. (15A, 250V a.c. UL & CSA)

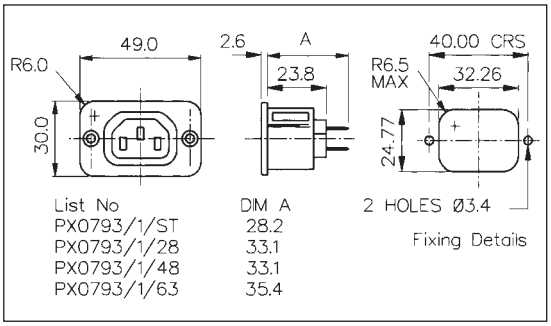


| Specification | PX0783/Panel/Term/Col | PX0793/Term/Col | PX0793/1/Term/Col |
|---|---|---|---|
| Fixing: | Snap fit, /10 (1mm), /15 (1.5mm), /20 (2mm), /30 (3mm) | Flange | Rectangular Flange |
| Terminations: | /28 (2.8mm solder), /48 (4.8mm tab) /63 (6.3mm tab), /ST (solder) | /28 (2.8mm solder), /48 (4.8mm tab) /63 (6.3mm tab), /ST (solder) | /28 (2.8mm solder), /48 (4.8mm tab) /63 (6.3mm tab), /ST (solder) |
| Colours: | No suffix (Black), /WH (White), /GY (Grey) | No suffix (Black), /WH (White), /GY (Grey) | No suffix (Black), /WH (White), /GY (Grey) |
| Max. Rating: | 10A, 250V a.c. (UL & CSA 15A, 250V a.c.) | 10A, 250V a.c. (UL & CSA 15A, 250V a.c.) | 10A, 250V a.c. (UL & CSA 15A, 250V a.c.) |
| Contact Resistance: | <10mΩ | <10mΩ | <10mΩ |
| Insulation Resistance: | $>10^4$ MΩ | $>10^4$ MΩ | $>10^4$ MΩ |
| A.C. Breakdown: | Pole-Pole 7kV. Poles-Panel 9kV | Pole-Pole 7kV. Poles-Panel 9kV | Pole-Pole 7kV. Poles-Panel 9kV |
| Operating Temp. Range: | –40°C to +70°C | –40°C to +70°C | –40°C to +70°C |
| Mouldings: | Nylon, Flammability Rating UL 94V-0 | Nylon, Flammability Rating UL 94V-0 | Nylon, Flammability Rating UL 94V-0 |
| Contacts: | Brass, Tin Plated | Brass, Tin Plated | Brass, Tin Plated |
| Approvals: | UR approval does not cover 4.8mm tab option | UR approval does not cover 4.8mm tab option | UR approval only covers /ST version |
| Accessories / Notes: | P.No. 12075, 14228 (See Page 96-97) | P.No. 12075, KT0006, 14228 (See Pages 95-97) | P.No. 12075, KT0006, 14228 (See Pages 95-97) |
| Mates with: | PX0685, PX0686, PX0686/SE | PX0685, PX0686, PX0686/SE | PX0685, PX0686, PX0686/SE |
| RoHS | Compliant | Compliant | Compliant |

# EN60 320-2-2 Standard Sheet H Class II

## FLANGE MOUNT OUTLET

- Two Pin Class II (No Earth Pin)
- 2.8, 4.8 or 6.3mm Tabs
- 10A, 250V a.c. (15A, 250V a.c. UL & CSA)

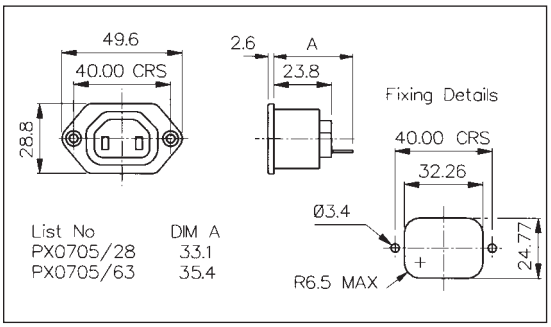


## SNAP FIT TO PANEL OUTLET

- Two Pin Class II (No Earth Pin)
- Panel Sizes 1, 1.5, 2.0 or 3.0mm
- 2.8, 4.8 or 6.3mm Tabs
- 10A, 250V a.c. (15A, 250V a.c. UL & CSA)

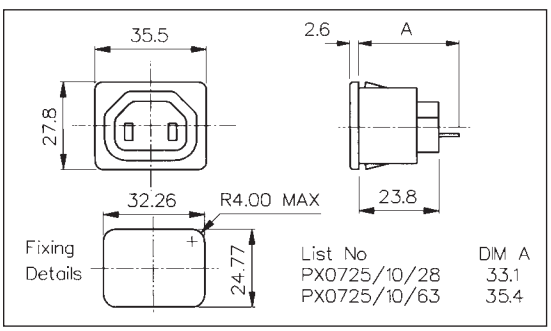


| Specification | PX0705/Term/Col | PX0725/Panel/Term/Col |
|---|---|---|
| Fixing(Panel): | Flange | Snap fit, /10 (1mm), /15 (1.5mm), /20 (2mm), /30 (3mm) |
| Terminations: | /28 (2.8mm solder), /48 (4.8mm tab) /63 (6.3mm tab) | /28 (2.8mm solder), /48 (4.8mm tab) /63 (6.3mm tab) |
| Colours: | No suffix (Black), /WH (White), /GY (Grey) | No suffix (Black), /WH (White), /GY (Grey) |
| Max. Rating: | 10A, 250V a.c. (UL & CSA 15A, 250V a.c.) | 10A, 250V a.c. (UL & CSA 15A, 250V a.c.) |
| Contact Resistance: | <10mΩ | <10mΩ |
| Insulation Resistance: | $>10^4$ MΩ | $>10^4$ MΩ |
| A.C. Breakdown: | Pole-Pole 4kV. Poles-Panel 9kV | Pole-Pole 7kV. Poles-Panel 9kV |
| Operating Temp. Range: | –40°C to +70°C | –40°C to +70°C |
| Mouldings: | Nylon, Flammability Rating UL94V-0 | Nylon, Flammability Rating UL94V-0 |
| Contacts: | Brass, Tin Plated | Brass, Tin Plated |
| Approvals: | UR approval does not cover 4.8mm tab option | UR approval does not cover 4.8mm tab option |
| Accessories / Notes: | P.No. 12075 (See Page 97) | P.No. 12075 (See Page 97) |
| RoHS | Compliant | Compliant |

# EN60 320-1 Standard Sheet C19 Class I & Standard Sheet C20 Class I Cold Condition

## C19 STRAIGHT FEMALE CABLE CONNECTOR

- Rewirable Screw Terminals
- 16A, 250V a.c. (20A, 250V a.c. UL and CSA)
- Wire Sizes (max); 3 x 2.5mm², 3 x 12AWG
- Overall cable diameter up to 12mm

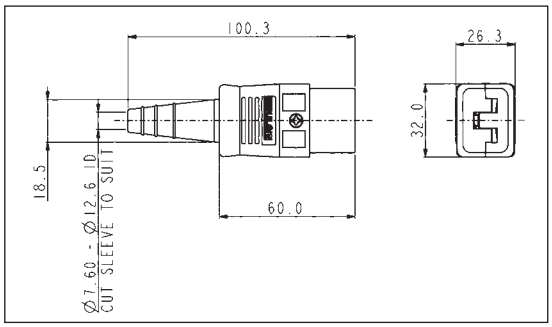


## C20 FLANGE MOUNT INLET

- 6.3mm or 4.8mm Tabs
- 16A, 250V a.c. (20A, 250V a.c. UL and CSA)

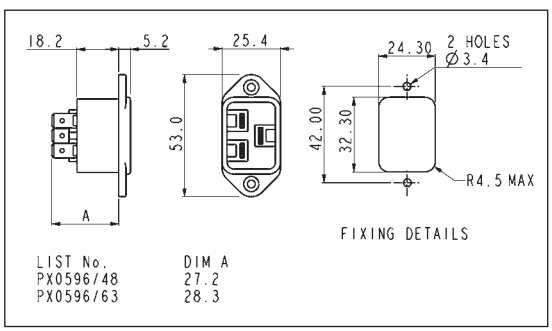


## C20 SNAP FIT TO PANEL INLET

- Fits panel sizes 1, 1.5, 2.0 or 3.0mm
- 6.3mm or 4.8mm Tabs
- 16A, 250V a.c. (20A, 250V a.c. UL and CSA)

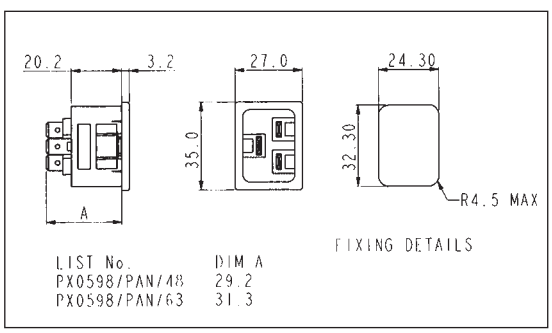


| Specification | PX0599 | PX0596/Termination | PX0598/Panel/Termination |
|---|---|---|---|
| Fixing (Panel): | - | Flange | Snap Fit, /10 (1mm), /15 (1.5mm), /20 (2mm), /30 (3mm) |
| Terminations: | Screw Terminals | /63 (6.3mm tab), /48 (4.8mm tab) | /63 (6.3mm tab), /48 (4.8mm tab) |
| Max. Rating: | 16A, 250V ac<br>20A, 250V ac UL and CSA | 16A, 250V ac<br>20A, 250V ac UL and CSA | 16A, 250V ac<br>20A, 250V ac UL and CSA |
| Insulation Resistance: | >5MΩ | >$10^6$MΩ | >$10^6$MΩ |
| Dielectric Strength | | | |
| Between contacts: | 1.5kV ac | 1.5kV ac | 1.5kV ac |
| Between contacts & accessible surfaces: | 3kV ac | 3kV ac | 3kV ac |
| Operating Temp. Range: | –40°C to +70°C | –40°C to +70°C | –40°C to +70°C |
| Max. Pin Temp.: | - | 70°C | 70°C |
| Withdrawal Force: | 15N Min, 60N Max. | - | - |
| Mouldings: | Nylon, Flammability Rating UL94V-0 | Nylon, Flammability Rating UL94V-0 | Nylon, Flammability Rating UL 94V-0 |
| Contacts: | Brass, Clean | Pins: Brass, Nickel Plated<br>Tabs: Brass, Tin Plated | Pins: Brass, Nickel Plated<br>Tabs: Brass, Tin Plated |
| Approvals: | | | |
| Mating Connectors: | C20 Inlets; PX0596 Flange and PX0598 Snapfit | PX0599 Rewirable Connector | PX0599 Rewirable Connector |
| Accessories: | | KT0012, P.No. 14064 (see Pages 95 & 97) | P.No. 14064 (see Page 97) |
| RoHS | Compliant | Compliant | Compliant |

# EN60 320-2-2 Standard Sheet J & Standard Sheet I, Class I Cold Condition

## FLANGE MOUNT OUTLET

- Flange Mounting
- 6.3mm Tabs
- 16A, 250V a.c. (20A, 250V a.c., UL & CSA)

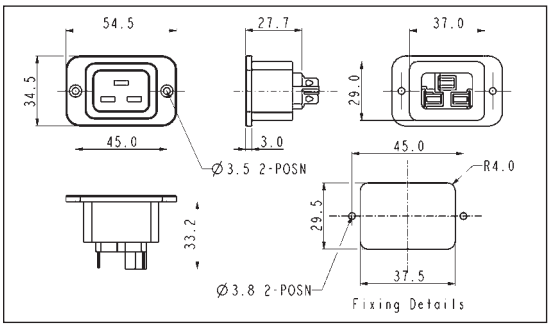


## SNAP FIT TO PANEL OUTLET

- Snap Fit to Panel
- Panel Size 1.5mm
- 6.3mm Tabs
- 16A, 250V a.c. (20A, 250V a.c., UL & CSA)

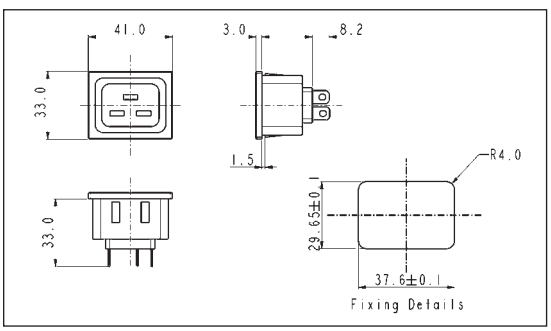


## STRAIGHT CABLE CONNECTOR

- Re-wireable, screw terminals
- 16A, 250V a.c. (20A, 250V a.c. UL & CSA)
- Wire size (max.): 3 x 2.5mm², 3 x 12 AWG
- Overall cable diameter up to 12mm

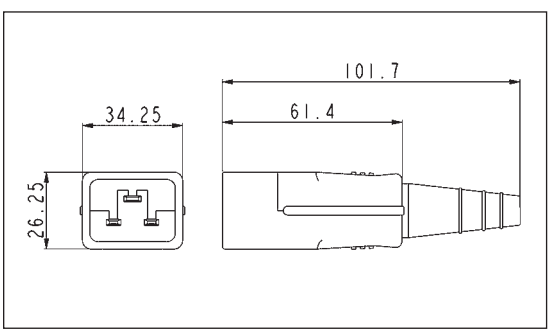


| Specification | PX0591/Termination | PX0592/15/Termination | PX0594 |
|---|---|---|---|
| Fixing: | Flange | Snap fit, 1.5mm accommodation | - |
| Terminations: | /63 (6.3mm tab) | /63 (6.3mm tab) | Screw terminals |
| Max. Rating: | 16A, 250V a.c. (UL & CSA 20A, 250V a.c.) | 16A, 250V a.c. (UL & CSA 20A, 250V a.c.) | 16A, 250V a.c. (UL & CSA 20A, 250V a.c.) |
| Insulation Resistance: | >100MΩ (250V, 1 min.) | >100MΩ (250V, 1 min.) | >5MΩ (min) |
| Dielectric Strength | | | |
| Between contacts: | 1.5kV ac | 1.5kV ac | 1.5kV ac |
| Between contacts & accessible surfaces: | 3kV ac | 3kV ac | 3kV ac |
| Operating Temp. Range: | –40°C to +70°C | –40°C to +70°C | –40°C to +70°C |
| Max. Pin Temp.: | - | - | - |
| Withdrawal Force: | - | - | 15N Min, 60N Max. |
| Mouldings: | P.B.T., Flammability Rating UL94V-0 | Nylon, Flammability Rating UL94V-0 | Nylon, Flammability Rating UL94V-0 |
| Contacts: | Brass, Tin Plated | Brass, Tin Plated | Brass, Nickel Plated |
| Approvals: | c UL us, VDE | c UL us, VDE | VDE, UL, SP pending |
| Accessories / Notes: | - | - | - |
| Mates with: | PX0594 | PX0594 | PX0591, PX0592 |
| RoHS | Compliant | Compliant | Compliant |

## Accessories

### RETAINING CLIP

**KT0006**
**(Shown with PX0580 & PX0587)**

- Prevents Accidental Removal
- Fits flanged inlets

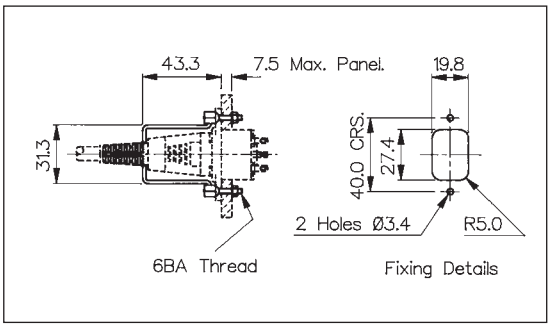


### RETAINING CLIP

**KT0009**
**(Shown with PF0001 & PX0587)**

- Prevents Accidental Removal
- Fits fused flanged inlets

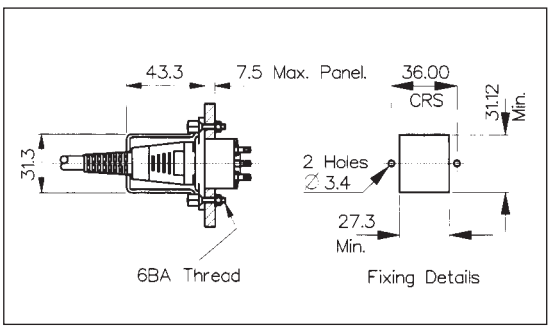


### RETAINING CLIP

**KT0012**
**(Shown with PX0596 & PX0599)**

- Prevents Accidental Removal
- For use with PX0596 flanged inlet and PX0599 connector

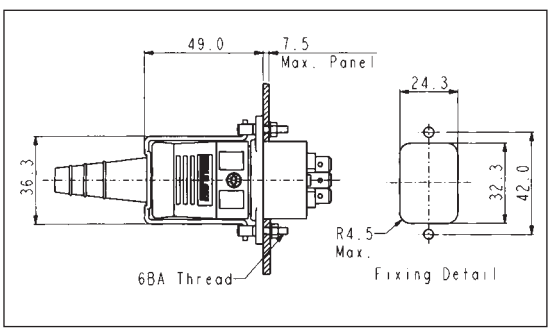


| Specification | KT0006 | KT0009 | KT0012 |
|---|---|---|---|
| | Retaining Clip to prevent accidental removal of connector.<br>Fits: PX0580 + PX0587<br>PX0590 + PX0597<br>PX0690 + PX0587<br>PX0675 + PX0686<br>PX0793 + PX0686<br>PX0793/1 + PX0686 | Retaining Clip to prevent accidental removal of connector.<br>Fits: PF0001+ PX0587<br>PF0001/PC + PX0587<br>PF0002 + PX0587<br>PF0030 + PX0587 | Retaining Clip to prevent accidental removal of connector.<br>Fits: PX0596 + PX0599 |
| Material: | Clip: Stainless Steel, other parts Brass, Nickel Plated | Clip: Stainless Steel, other parts Brass, Nickel Plated | Clip: Stainless Steel, other parts Brass, Nickel Plated |
| RoHS | Compliant | Compliant | Compliant |

## Accessories

### BLANKING COVER

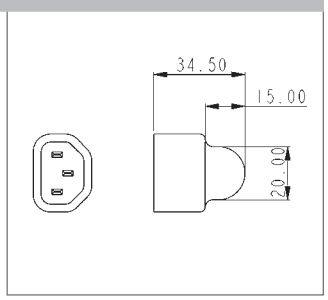


### INSULATION BOOT

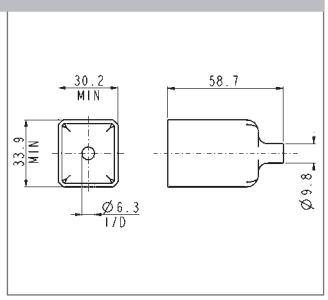


### BLANKING COVER

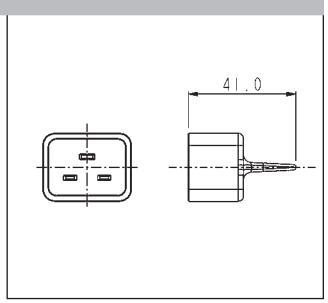


### INSULATION BOOT

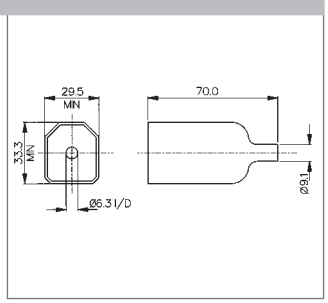


- Blanking covers
- Protects Front of Outlet Connector
- Protects Against Accidental Electric Shock

- PVC Insulation Boots
- Protects Rear of Connector
- Protects Against Accidental Electric Shock

| Specification | P.No. 14228 | P.No. 14277 | P.No. 14340 | P.No. 14317 |
|---|---|---|---|---|
| | Blanking cover for PX0578, PX0675, PX0695, PX0783, PX0793, PX0716, PX0717, PX0718 | Blanking cover for PX0591, PX0592, | Insulation boot for PS20, PS21, PS25, PS26 | Insulation boot for PF0030, PF0033 (except /PC versions) |
| Operating Temp. Range: | –40°C to +70°C | –40°C to +70°C | –20°C to +60°C | –20°C to +60°C |
| Max. Working Voltage: | 250V a.c. | 250V a.c. | 250V a.c. | 250V a.c. |
| Flash Tested: | 2kV a.c. | 2kV a.c. | 2kV a.c. | 2kV a.c. |
| Material: | Nylon | Nylon | P.V.C. | P.V.C. |
| Flammability Rating: | UL94V-0 | UL94V-0 | UL94V-0 | UL94V-0 |
| RoHS | Compliant | Compliant | Compliant | Compliant |

## Accessories

### INSULATION BOOT

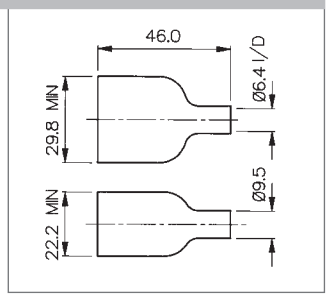


### INSULATION BOOT

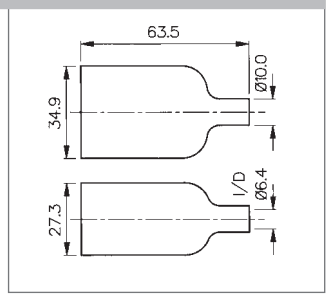


### INSULATION BOOT

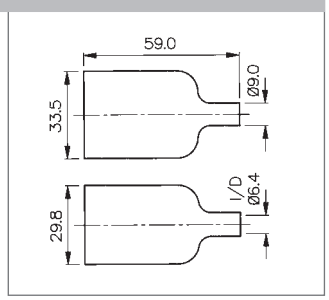


### INSULATING BOOT

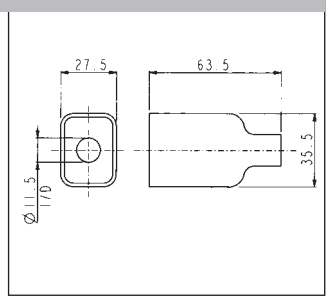


- PVC Insulation Boots
- Protects Rear of Connector
- Protects Against Accidental Electric Shock

| Specification | P.No. 11328 | P.No. 11987 | P.No. 12075 | P.No. 14064 |
|---|---|---|---|---|
| | Insulation boot for PX0575, PX0579, PX0580, PX0590, PX0595 | Insulation boot for PF range PF0001, PF0002, PF0006, PF0007, PF0011, PF0016 (except /PC versions) | Insulation boot for PX0675, PX0695, PX0705, PX0725, PX0783, PX0793, PX0793/1 (except /PC versions) | Insulation boot for PX0596, PX0598 |
| Operating Temp. Range: | –20°C to +60°C | –20°C to +60°C | –20°C to +60°C | –20°C to +60°C |
| Max. Working Voltage: | 250V a.c. | 250V a.c. | 250V a.c. | 250V a.c. |
| Flash Tested: | 2kV a.c. | 2kV a.c. | 2kV a.c. | 2kV a.c. |
| Material: | P.V.C. | P.V.C. | P.V.C. | P.V.C. |
| Flammability Rating: | UL94V-0 | UL94V-0 | UL94V-0 | UL94V-0 |
| RoHS | Compliant | Compliant | Compliant | Compliant |

Общество с ограниченной ответственностью «МосЧип» ИНН 7719860671 / КПП 771901001
Адрес: 105318, г.Москва, ул.Щербаковская д.3, офис 1107

**Данный компонент на территории Российской Федерации**

**Вы можете приобрести в компании MosChip.**

Для оперативного оформления запроса Вам необходимо перейти по данной ссылке:

http://moschip.ru/get-element

Вы можете разместить у нас заказ для любого Вашего проекта, будь то серийное производство или разработка единичного прибора.

В нашем ассортименте представлены ведущие мировые производители активных и пассивных электронных компонентов.

Нашей специализацией является поставка электронной компонентной базы двойного назначения, продукции таких производителей как XILINX, Intel (ex.ALTERA), Vicor, Microchip, Texas Instruments, Analog Devices, Mini-Circuits, Amphenol, Glenair.

Сотрудничество с глобальными дистрибьюторами электронных компонентов, предоставляет возможность заказывать и получать с международных складов практически любой перечень компонентов в оптимальные для Вас сроки.

На всех этапах разработки и производства наши партнеры могут получить квалифицированную поддержку опытных инженеров.

Система менеджмента качества компании отвечает требованиям в соответствии с ГОСТ Р ИСО 9001, ГОСТ РВ 0015-002 и ЭС РД 009

**Офис по работе с юридическими лицами:**

105318, г.Москва, ул.Щербаковская д.3, офис 1107, 1118, ДЦ «Щербаковский»

Телефон: +7 495 668-12-70 (многоканальный)

Факс: +7 495 668-12-70 (доб.304)

E-mail: info@moschip.ru

Skype отдела продаж:
moschip.ru
moschip.ru_4
moschip.ru_6
moschip.ru_9