GAMMA MICROELECTRONICS

GM7230

3A STEP-DOWN VOLTAGE REGULATOR

Description

GM7230 of regulators provides all the active functions for a step-down (buck) switching regulator, and drives 3A load with excellent line and load regulation. GM7230's is available in fixed output voltages of 3.3V, 5V, 12V, and a versatile Adjustable output version.

These regulators are simple to use and require a minimum number of external components. Features include internal frequency compensation and a fixed-frequency oscillator. The GM7230 is high-efficiency replacements for popular three-terminal linear regulators, and is requiring a smaller heatsink or even no heatsink.

GM7230 performs well with standard inductors from several manufacturers, and simplifying the design of switch-mode power supplies. GM7230 guarantees ±4% tolerance on output voltage within specified input voltages and output load conditions, and ±15% on the oscillator frequency.

External shutdown is included with 80 μA (typical) standby current. The output switch has cycle-by-cycle current limiting as well as thermal shutdown for full protection under fault conditions.

GM7230 operates at a switching frequency of 150 kHz thus allowing smaller sized filter components than what would be needed with lower frequency switching regulators. Available in a standard 5-lead TO-220 package with several different lead bend options, and a 5-lead TO-263 surface mount package.

Features

- 3.3V, 5V, 12V and Adjustable output versions
- Adjustable version output voltage range 1.23V to 37V ±4% max over line and load conditions
- 3A output current
- Input voltage range up to 40V
- Requires only 4 external components
- High efficiency
- TTL shutdown capability, low power standby mode
- Low power standby mode, IQ typically 80 UA
- Thermal shutdown, current limit protection
- Uses standard inductors
- 150 kHz fixed frequency internal oscillator

Application

Pre-regulator for linear regulators	On-card/board switching regulators
High-efficiency step-down buck regulator	Positive to negative converter (buck-boost)

TYPICAL APPLICATIONS

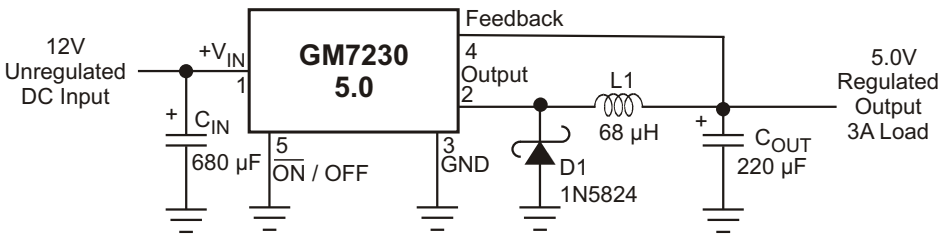

◆ MARKING INFORMATION & PIN CONFIGURATIONS

TO-220- 5

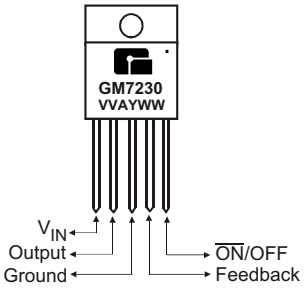

TO-220- 5B

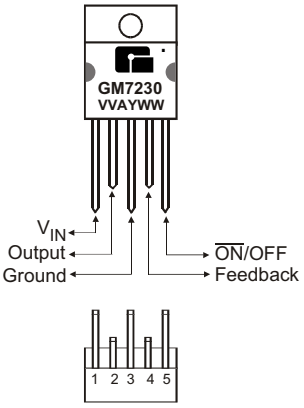

TO-263-5(D^{2}PAK)

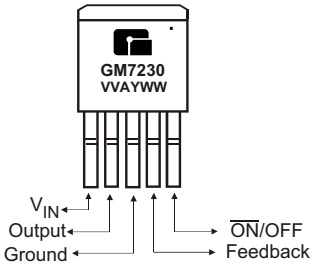

V V / VVV= Output Voltage
(33=3.3V , 12=12V, A=Adj)
A = Assembly Location
Y = Year
W W = Weekly

◆ ORDERING INFORMATION

Ordering Number	Output Voltage	Package	Shipping
GM7230-ATB5T	Adj	TO-220-5	50 Units / Tube
GM7230-ATB5BT	Adj	TO-220-5B	50 Units / Tube
GM7230-ATA5R	Adj	TO-263-5	800 Units/ Tape & Reel
GM7230-ATA5T	Adj	TO-263-5	50 Units / Tube
GM7230-3.3TB5T	3.3	TO-220-5	50 Units / Tube
GM7230-3.3TB5BT	3.3	TO-220-5B	50 Units / Tube
GM7230-3.3TA5R	3.3	TO-263-5	800 Units/ Tape & Reel
GM7230-3.3TA5T	3.3	TO-263-5	50 Units / Tube
GM7230-5.0TB5T	5.0	TO-220-5	50 Units / Tube
GM7230-5.0TB5BT	5.0	TO-220-5B	50 Units / Tube
GM7230-5.0TA5R	5.0	TO-263-5	800 Units/ Tape & Reel
GM7230-5.0TA5T	5.0	TO-263-5	50 Units / Tube
GM7230-12TB5T	12	TO-220-5	50 Units / Tube
GM7230-12TB5BT	12	TO-220-5B	50 Units / Tube
GM7230-12TA5R	12	TO-263-5	800 Units/ Tape & Reel
GM7230-12TA5T	12	TO-263-5	50 Units / Tube
GM7230-15TB5T	15	TO-220-5	50 Units / Tube
GM7230-15TB5BT	15	TO-220-5B	50 Units / Tube
GM7230-15TA5R	15	TO-263-5	800 Units/ Tape & Reel
GM7230-15TA5T	15	TO-263-5	50 Units / Tube

* TB5B: Bent and Staggered Leads of TO-220 package
** For detail Ordering Number identification, please see last page.

◆ ABSOLUTE MAXIMUM RATINGS

Rating	Value	Unit
Maximum Supply Voltage	45	V
$\overline{ON}$/OFF Pin Input Voltage/ Feed back pin voltage	-0.3 ≤ V ≤ +25	V
Output Voltage to Ground (Steady State)	-1.0	V
Power Dissipation	Internally Limited	-
Storage Temperature Range	-65 to + 150	°C
Maximum Junction Temperature	+150	°C
Operating Temperature Range	-40 ≤ T_J ≤ 125	°C
Minimum ESD Rating (C=100pF, R=1.5k)	2	kV
Lead Temperature (Soldering, 10 sec.)	+260	°C
Lead Temperature S Package Vapor Phase (60 secretary.) Infrared (10 secretary.) T Package (Soldering, 10 secretary.) Maximum Junction Temperature	 +215 +245 +260 +150	°C

◆ OPERATING CONDITIONS

Rating	Value	Unit
Temperature Range	45 ≤ T_J ≤ +125	°C
Supply Voltage	4.5 to 40	V

◆ BLOCK DIAGRAM

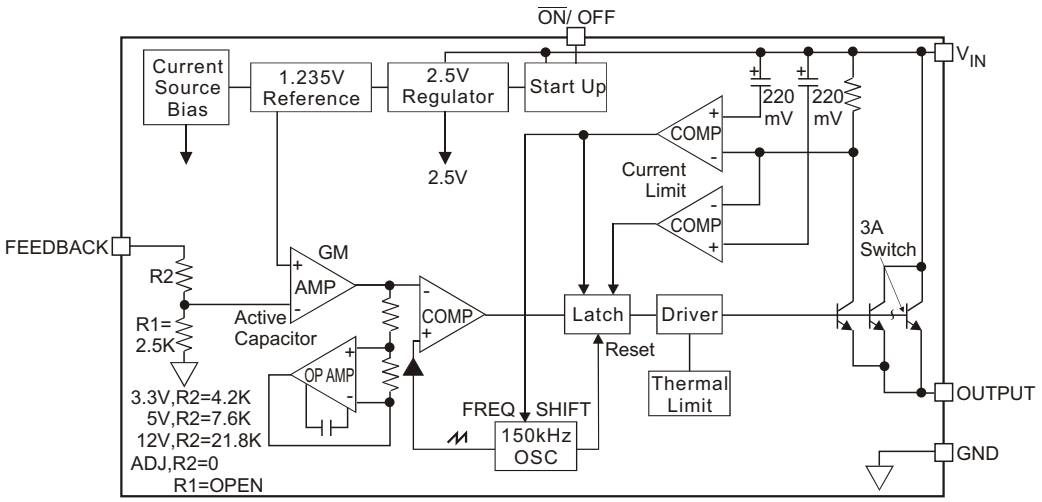

◆ ELECTRICAL CHARACTERISTICS: GM7230-3.3

(Specifications with standard type face are for T_J = 25°C, and those with **boldface type** apply over full Operating Temperature Range)

Parameter	Conditions	Symbol	Min	Typ	Max	Unit
Output Voltage	4.75 ≤ V_{IN}≤40V, 0.2A≤I_{LOAD}≤3A	V_{OUT}	3.168/**3.135**	3.3	3.432/**3.465**	V
Efficiency	V_{IN} = 12V, I_{LOAD} = 3.0A		-	73	-	%

◆ ELECTRICAL CHARACTERISTICS: GM7230-5.0

(Specifications with standard type face are for T_J = 25°C, and those with **boldface type** apply over full Operating Temperature Range)

Parameter	Conditions	Symbol	Min	Typ	Max	Unit
Output Voltage	7V ≤ V_{IN} ≤ 40V, 0.2A ≤ I_{LOAD}≤3A	V_{OUT}	4.800/**4.750**	5.0	5.200/**5.250**	V
Efficiency	V_{IN} = 12V, I_{LOAD} = 3.0A		-	80	-	%

◆ ELECTRICAL CHARACTERISTICS: GM7230-12

(Specifications with standard type face are for T_J = 25°C, and those with **boldface type** apply over full Operating Temperature Range)

Parameter	Conditions	Symbol	Min	Typ	Max	Unit
Output Voltage	15V ≤ V_{IN} ≤ 40V, 0.2A ≤ I_{LOAD}≤3A	V_{OUT}	11.52/**11.40**	12.0	12.48/**12.60**	V
Efficiency	V_{IN} = 25V, I_{LOAD} = 3.0A		-	90	-	%

◆ ELECTRICAL CHARACTERISTICS: GM7230-ADJ

(Specifications with standard type face are for T_J = 25°C, and those with **boldface type** apply over full Operating Temperature Range)

Parameter	Conditions ≤	Symbol	Min	Typ	Max	Unit
Feedback Voltage	4.5V ≤ V_{IN} ≤ 40V, 0.2A≤I_{LOAD}≤3A V_{OUT} = 3V	V_{OUT}	1.193/**1.180**	1.230	1.267/**1.280**	V
Efficiency	V_{IN} = 12V, I_{LOAD} = 3A, V_{OUT}=3V		-	73	-	%

◆ ELECTRICAL CHARACTERISTICS: All Output Voltage Versions

(Specifications with standard type face are for T_J = 25°C, and those with **boldface type** apply over full Operating Temperature Range. Unless otherwise specified, V_{IN}= 12V for the 3.3V, 5.0V and ADJ version and V_{IN}= 24V for 12V version. I_{LOAD} = 500 mA)

Parameter	Conditions	Symbol	Min	Typ	Max	Unit
Feedback Bias Current	V_{FB} = 1.3V (Adjustable Version Only)	I_b	-	10	50 / **100**	nA
Oscillator Frequency	(Note 6)	f_o	127/**110**	150	173 / **173**	kHz
Saturation Voltage	I_{OUT} = 3A (Notes 7, 8)	V_{SAT}	-	1.16	1.4 / **1.5**	V
Max Duty Cycle (ON)	(Note 8)	DC		100	-	%
Min Duty Cycle (OFF)	(Note 9)	DC		0	-	%
Current Limit	Peak Current (Notes 7, 8)	I_{CL}	3.6 / **3.4**	4.5	6.9 / **7.5**	A
Output Leakage Current	(Notes 7, 9, 10) Output = 0 V	I_L	-	-	50	μA
	(Notes 10) Output = -0.9V		-	2	30	mA
Quiescent Current	(Note 9)	I_Q	-	5	10	mA
Standby Quiescent Current	$\overline{ON}$/OFF Pin = 5V (OFF) (Note 10)	I_{STBY}	-	80	200 / **250**	μA
Thermal Resistance	TO-220 or TO-263 Package, Junction to Case	JC	-	2	-	°C/W
	TO-220 Package, Junction to Ambient (Note 11)	JA	-	50	-	
	TO-263 Package, Junction to Ambient (Note 12)	JA	-	50	-	
	TO-263 Package, Junction to Ambient (Note 13)	JA	-	30	-	
	TO-263 Package, Junction to Ambient (Note 14)	JA	-	20	-	
$\overline{ON}$/OFF Pin Logic Input Level	Low (ON)	V_{IH}	-	1.3	**0.6**	V
	High (OFF)	V_{IL}	**2.0**	1.3	-	V
$\overline{ON}$/OFF Pin Input Current	V_{LOGIC} = 2.5V (OFF)	I_H	-	5	15	μA
	V_{LOGIC} = 0.5V (ON)	I_L	-	0.02	5	μA

Note 1: Absolute Maximum Ratings indicate limits beyond which damage to the device may occur. Operating Ratings indicate conditions for which the device is intended to be functional, but do not guarantee specific performance limits. For guaranteed specifications and test conditions, see the Electrical Characteristics.
Note 2: The human body model is a 100 pF capacitor discharged through a 1.5k resistor into each pin.
Note 3: Typical numbers are at 25°C and represent the most likely norm.
Note 4: All limits guaranteed at room temperature (standard type face) and at temperature extremes (bold type face). All room temperature limits are 100% production tested. All limits at temperature extremes are guaranteed via correlation using standard Statistical Quality Control (SQC) methods. All limits are used to calculate Average Outgoing Quality Level (AOQL).
Note 5: External components such as the catch diode, inductor, input and output capacitors, and voltage programming resistors can affect switching regulator system performance. When the GM7230 is used as shown in the Figure 1 test circuit, system performance will be as shown in system parameters section of Electrical Characteristics.
Note 6: The switching frequency is reduced when the second stage current limit is activated.
Note 7: No diode, inductor or capacitor connected to output pin.
Note 8: Feedback pin removed from output and connected to 0V to force the output transistor switch ON.
Note 9: Feedback pin removed from output and connected to 12V for the 3.3V, 5V, and the ADJ. version, and 15V for the 12V version, to force the output transistor switch OFF.
Note 10: V_{IN} = 40V.
Note 11: Junction to ambient thermal resistance (no external heat sink) for the TO-220 package mounted vertically, with the leads soldered to a printed circuit board with (1 oz.) copper area of approximately 1 in^2.
Note 12: Junction to ambient thermal resistance with the TO-263 package tab soldered to a single printed circuit board with 0.5 in^2 of (1 oz.) copper area.
Note 13: Junction to ambient thermal resistance with the TO-263 package tab soldered to a single sided printed circuit board with 2.5 in^2 of (1 oz.) copper area.
Note 14: Junction to ambient thermal resistance with the TO-263 package tab soldered to a double sided printed circuit board with 3 in^2 of (1 oz.) copper area on Gm7230 side of the board, and approximately 16 in^2 of copper on the other side of the p-c board.

◆ TEST CIRCUIT AND LAYOUT GUIDELINES

Careful layout is important with any switching regulator. Rapidly switching currents associated with wiring inductance generate voltage transients which can cause problems. To minimize inductance and ground loops, the lengths of the leads indicated by heavy lines in Figure 1 below should be kept as short as possible. Single-point grounding (as indicated in Figure 1) or ground plane construction should be used for best results. When using the Adjustable version, place the programming resistors as close as possible to Gm7230, to keep the sensitive feedback wiring short.

Figure 1(a). Fixed Output Voltage Versions

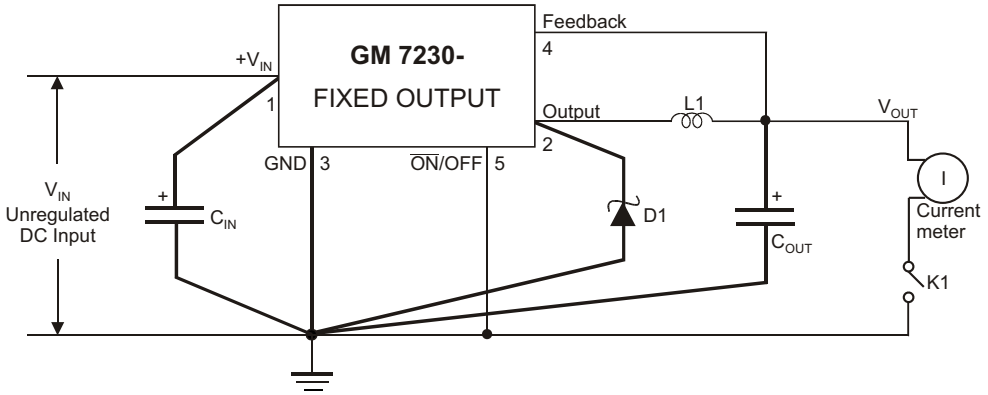

C_{IN} - 470 μF, 50V, Aluminum Electrolytic

C_{OUT} - 220 μF, 25V, Aluminum Electrolytic

D1 - 5A, 40V Schottky

L1 - 68 μH, 3L Electronic Corp. TC-680M-3A-5026

Figure 1(b). Adjustable Output Voltage Versions

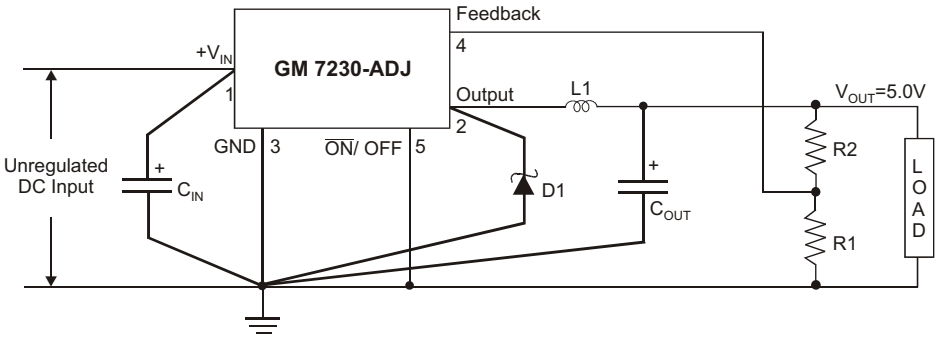

$$V_{OUT} = V_{REF} \left(1 + \frac{R2}{R1} \right)$$

$$R2 = R1 \left(\frac{V_{OUT}}{V_{REF}} - 1 \right)$$

where V_{REF} = 1.23V, R1 aproximetly 1k , 1%

C_{IN} - 470 µF, 50V, Aluminum Electrolytic

C_{OUT} - 220 µF, 25V, Aluminum Electrolytic

D1 - 5A, 40V Schottky

L1 - 68 µH, 3L Electronic Corp. TC-680M-3A-5026

R1 - 1kΩ, 1%

V_{OUT} = 5V, R2 = 3.06kΩ , 1%

◆ Typical Performance Characteristics

Figure 2. Switch Saturation Voltage

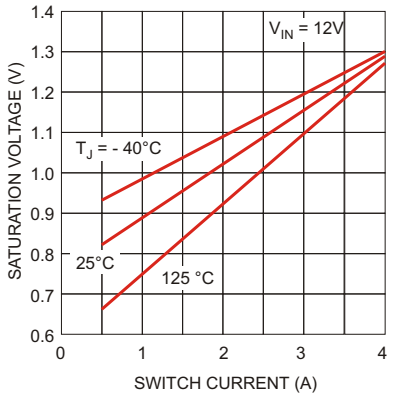

Figure 3. Switch Current Limit

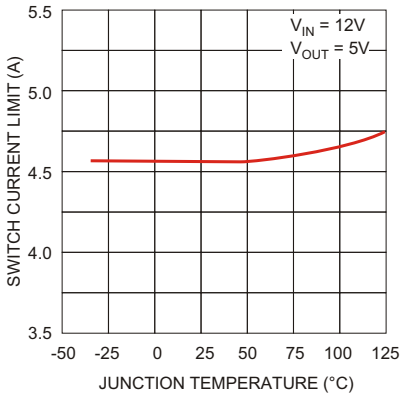

Figure 4. Dropout Voltage

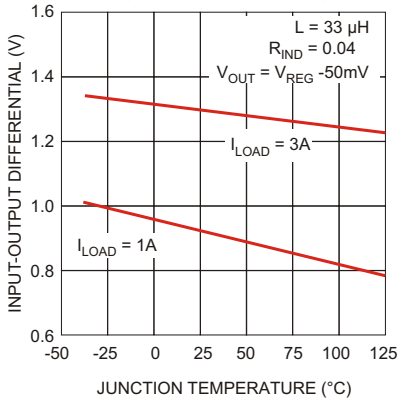

Figure 5. Operating Quiescent Current

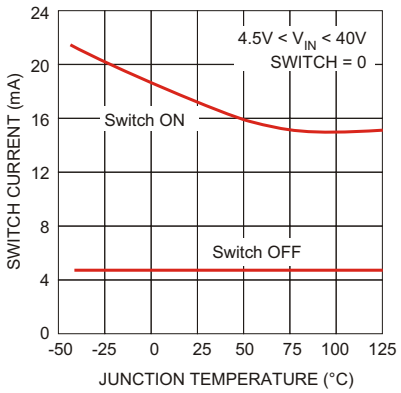

Figure 6. Shutdown Quiescent Current

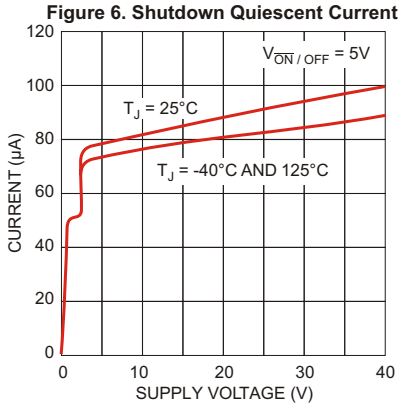

Figure 7. Minimum Operating Supply Voltage

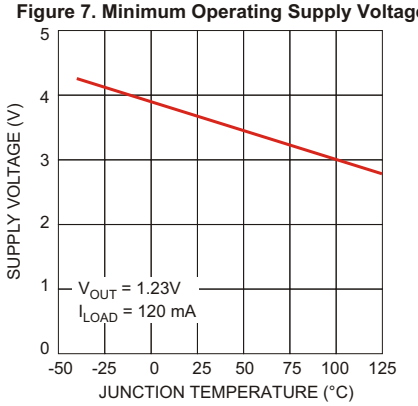

◆ Typical Performance Characteristics

Figure 8. $\overline{ON}$ / OFF Pin Current (Sinking)

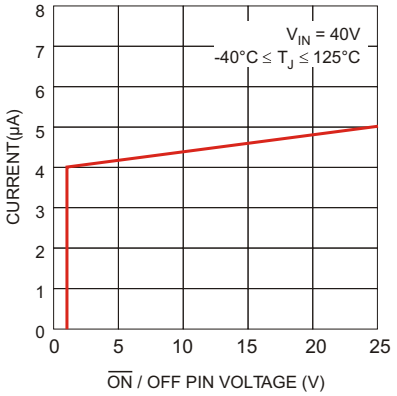

Figure 9. Switching Frequency

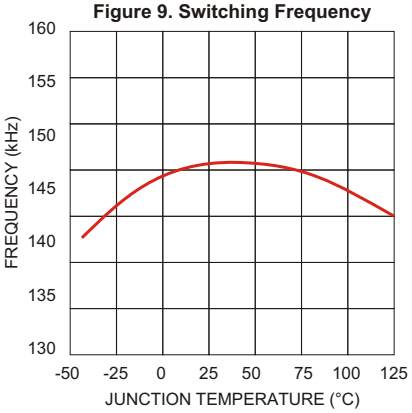

◆ Inductor Selection by Manufacturer's Part Numbe.

Inductor Value	3L Electronic Corp.
47μH	TC-470M-3A-5026
68μH	TC-680M-3A-5026
100μH	TC-101M-3A-5026
150μH	TC-151M-3A-8026
220μH	TC-221M-3A-8026
330μH	TC-331M-3A-8026
470μH	TC-471M-3A-8026
680μH	TC-681M-3A-8026
1000μH	TC-102M-3A-9426
1500μH	TC-152M-3A-9426

3L Electronic Corp., + 886(2) 86659999
Website : www.3lcoil.com.tw

◆ Capacitor Selection by Manufacturer's Part Number

Capacitor Value	Nippon Chemil - Con Corp.
100μF	KY50VB100-MH11
220μF	KY50VB220-MJ16
470μF	KY50VB470-MJ30
680μF	KY50VB680-MK30
1000μF	KY50VB1000-ML25

Nippon Chemi-Con Corp. , + 81(3)54367628
Website : www.chemi-con.co.jp

◆ TO-220-5 PACKAGE OUTLINE DIMENSIONS

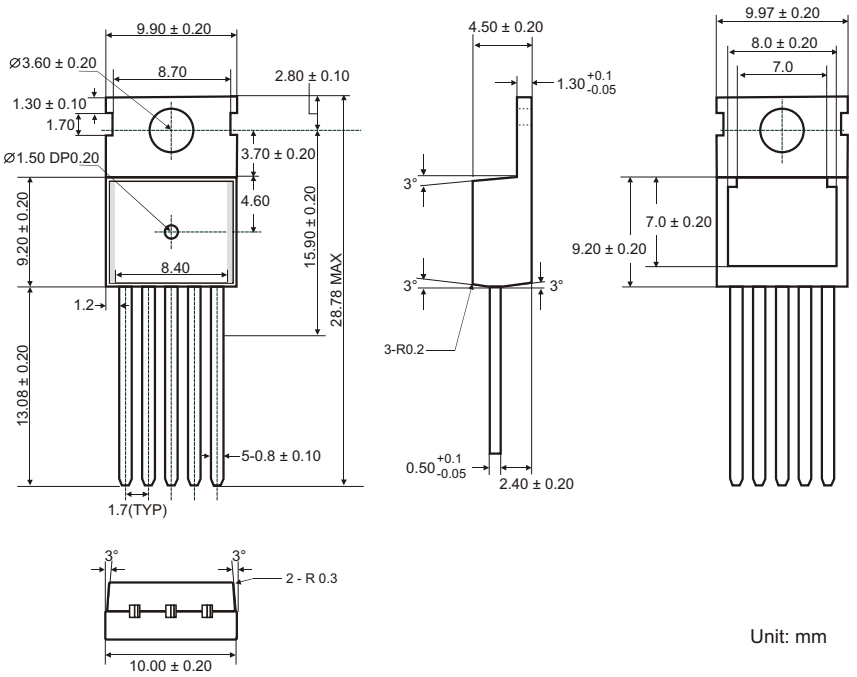

Unit: mm

◆ TO-263-5 PACKAGE OUTLINE DIMENSIONS

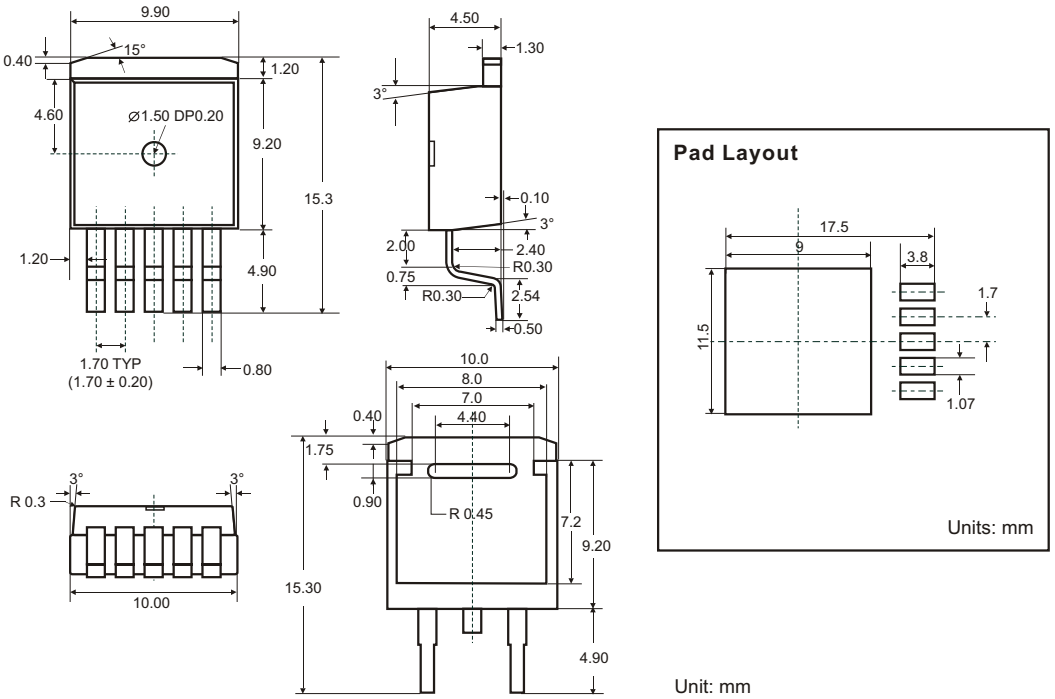

Unit: mm

◆ TO-220-5B PACKAGE OUTLINE DIMENSIONS

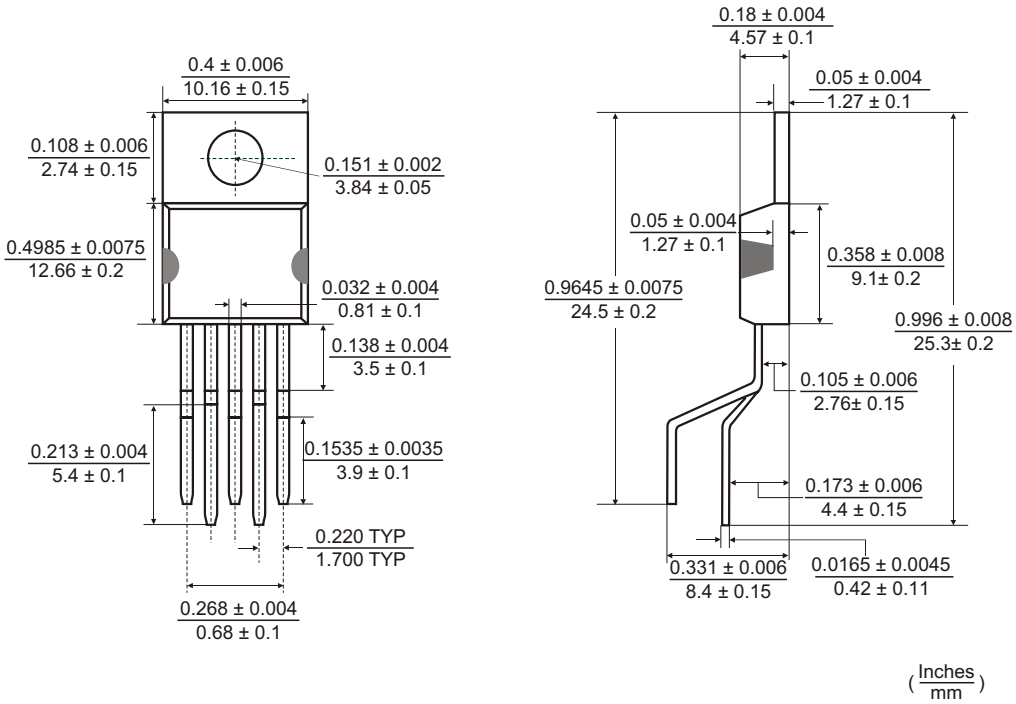

◆ ORDERING NUMBER

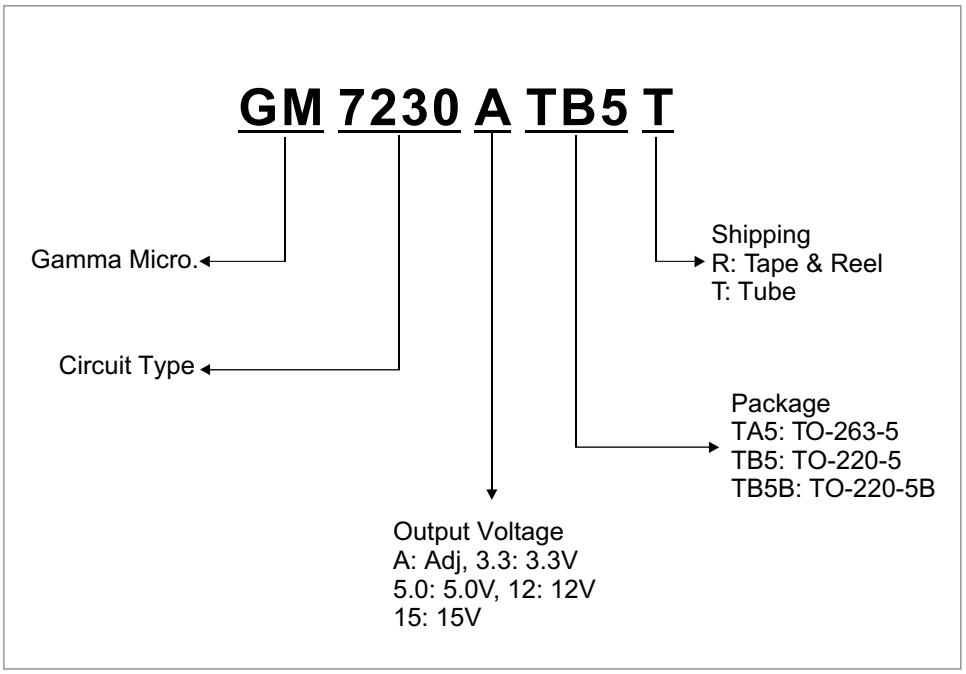

GAMMA Micro, GAMMA, and are registered trademarks of GAMMA MICROELECTRONICS INC. GAMMA reserves the right to make changes without further notice to any products herein.

Information provided herein is alleged to be exact and consistent and this publication surpasses and replaces all information previously supplied.

GAMMA makes no warranty the suitability of its products for any particular purpose, nor does GAMMA assume any liability arising out of the application or use of any product or circuit, and specifically disclaims any and all liability including without limitation special, consequential or incidental damages.

GAMMA products are not authorized for using as critical components in life support devices or systems without prior written approval from GAMMA MICROELECTRONICS INC.

Общество с ограниченной ответственностью «МосЧип» ИНН 7719860671 / КПП 771901001
Адрес: 105318, г.Москва, ул.Щербаковская д.3, офис 1107

Данный компонент на территории Российской Федерации

Вы можете приобрести в компании MosChip.

Для оперативного оформления запроса Вам необходимо перейти по данной ссылке:

http://moschip.ru/get-element

Вы можете разместить у нас заказ для любого Вашего проекта, будь то серийное производство или разработка единичного прибора.

В нашем ассортименте представлены ведущие мировые производители активных и пассивных электронных компонентов.

Нашей специализацией является поставка электронной компонентной базы двойного назначения, продукции таких производителей как XILINX, Intel (ex.ALTERA), Vicor, Microchip, Texas Instruments, Analog Devices, Mini-Circuits, Amphenol, Glenair.

Сотрудничество с глобальными дистрибьюторами электронных компонентов, предоставляет возможность заказывать и получать с международных складов практически любой перечень компонентов в оптимальные для Вас сроки.

На всех этапах разработки и производства наши партнеры могут получить квалифицированную поддержку опытных инженеров.

Система менеджмента качества компании отвечает требованиям в соответствии с ГОСТ Р ИСО 9001, ГОСТ РВ 0015-002 и ЭС РД 009

Офис по работе с юридическими лицами:

105318, г.Москва, ул.Щербаковская д.3, офис 1107, 1118, ДЦ «Щербаковский»

Телефон: +7 495 668-12-70 (многоканальный)

Факс: +7 495 668-12-70 (доб.304)

E-mail: info@moschip.ru

Skype отдела продаж:
moschip.ru
moschip.ru_4
moschip.ru_6
moschip.ru_9