UltraMOV™ Varistor Series

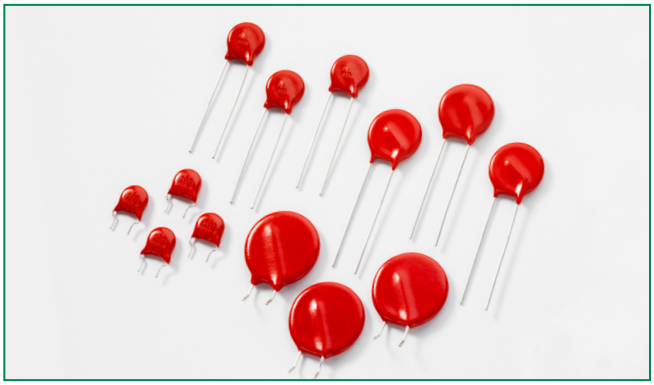

Agency Approvals

Agency	Agency Approval	Agency File Number
	UL1449	E320116
	CECC 42201-006 IEC 61051-1 IEC 61051-2 IEC 60950-1 (Annex Q) for 14mm and 20mm only	116895
	22.2-1	91788
	CECC 42201-006 IEC 61051-1 IEC 61051-2 IEC 60950-1 (Annex Q) for 14mm and 20mm only	E1273/F

Additional Information

Datasheet | Resources | Samples

Description

The UltraMOV™ Metal Oxide Varistor Series is designed for applications requiring high peak surge current ratings and high energy absorption capability. UltraMOV™ varistors are primarily intended for use in AC Line Voltage applications such as Surge Protection Device (SPD), Uninterruptable Power Supplies (UPS), AC Power Taps, AC Power Meters, or other products that require voltage clamping of high transient surge currents from sources such as lightning, inductive load switching, or capacitor bank switching.

These devices are produced in radial lead package sizes of 7, 10, 14 and 20mm and offered in a variety of lead forms. UltraMOV™ varistor are manufactured with recognized epoxy encapsulation and are rated for ambient temperatures up to 85°C with no derating. This Series is LASER-branded and is supplied in bulk, ammo pack (fan-fold), or tape and reel packaging.

Features

- Lead–free, Halogen-Free and RoHS compliant.
- High peak surge current rating (I_{TM}) up to 10kA, single 8 x 20 pulse, (20mm)
- Standard operating voltage range compatible with common AC line voltages (130 V_{AC} to 625 V_{AC})
- Characterized for maximum standby current (Leakage)
- Custom voltage types available
- Standard lead form and lead space options

Absolute Maximum Ratings

• For ratings of individual members of a series, see Device Ratings and Specifications chart

Continuous	UltraMOV™ Varistor Series	Units
Steady State Applied Voltage:		
AC Voltage Range ($V_{M(AC)RMS}$)	130 to 625	V
Transients:		
Single-Pulse Peak Current (I_{TM}) 8x20μs Wave (See Figure 2)	1,750 to 10,000	A
Single-Pulse Energy Range (W_{TM}) 2ms Square Wave	12.5 to 400	J
Operating Ambient Temperature Range (T_A)	-55 to +85	°C
Storage Temperature Range (T_{STG})	-55 to +125	°C
Temperature Coefficient (a^V) of Clamping Voltage (V_C) at Specified Test Current	<0.01	%/°C
Hi-Pot Encapsulation (COATING Isolation Voltage Capability)	2500	V
COATING Insulation Resistance	1000	MΩ

CAUTION: Stresses above those listed in "Absolute Maximum Ratings" may cause permanent damage to the device. This is a stress only rating and operation of the device at these or any other conditions above those indicated in the operational sections of this specification is not implied.

© 2015 Littelfuse, Inc.
Specifications are subject to change without notice.

UltraMOV™ Series Ratings & Specifications

Part Number	Branding	Maximum Rating (85°C)					Specifications (25°C)				
		Continuous		Transient			Varistor Voltage at 1mA DC Test Current		Maximum Clamping Voltage 8 x 20μs		Typical Capacitance
		RMS Volts	DC Volts	Energy 2ms	Peak Current 8 x 20μs						
		$V_{M(AC)}$	$V_{M(DC)}$	W_{TM}	I_{TM} 1 x Pulse	I_{TM} 2 x Pulse	V_{NOM} Min	V_{NOM} Max	V_C	I_{PK}	f = 1MHz
		(V)	(V)	(J)	(A)	(A)	(V)	(V)	(V)	(A)	(pF)
V07E130P	P7V130	130	170	12.5	1750	1200	184.5	225.5	340	10	180
V10E130P	P10V130	130	170	25	3500	2500	184.5	225.5	340	25	450
V14E130P	P14V130	130	170	50	6000	4500	184.5	225.5	340	50	1000
V20E130P	P20V130	130	170	100	10000	6500	184.5	225.5	340	100	1900
V07E140P	P7V140	140	180	13.5	1750	1200	198	242	360	10	160
V10E140P	P10V140	140	180	27.5	3500	2500	198	242	360	25	400
V14E140P	P14V140	140	180	55	6000	4500	198	242	360	50	900
V20E140P	P20V140	140	180	110	10000	6500	198	242	360	100	1750
V07E150P	P7V150	150	200	15	1750	1200	216	264	395	10	150
V10E150P	P10V150	150	200	30	3500	2500	216	264	395	25	360
V14E150P	P14V150	150	200	60	6000	4500	216	264	395	50	800
V20E150P	P20V150	150	200	120	10000	6500	216	264	395	100	1600
V07E175P	P7V175	175	225	17	1750	1200	243	297	455	10	130
V10E175P	P10V175	175	225	35	3500	2500	243	297	455	25	350
V14E175P	P14V175	175	225	70	6000	4500	243	297	455	50	700
V20E175P	P20V175	175	225	135	10000	6500	243	297	455	100	1400
V07E230P	P7V230	230	300	20	1750	1200	324	396	595	10	100
V10E230P	P10V230	230	300	42	3500	2500	324	396	595	25	250
V14E230P	P14V230	230	300	80	6000	4500	324	396	595	50	550
V20E230P	P20V230	230	300	160	10000	6500	324	396	595	100	1100
V07E250P	P7V250	250	320	25	1750	1200	351	429	650	10	90
V10E250P	P10V250	250	320	50	3500	2500	351	429	650	25	220
V14E250P	P14V250	250	320	100	6000	4500	351	429	650	50	500
V20E250P	P20V250	250	320	170	10000	6500	351	429	650	100	1000
V07E275P	P7V275	275	350	28	1750	1200	387	473	710	10	80
V10E275P	P10V275	275	350	55	3500	2500	387	473	710	25	200
V14E275P	P14V275	275	350	110	6000	4500	387	473	710	50	450
V20E275P	P20V275	275	350	190	10000	6500	387	473	710	100	900
V07E300P	P7V300	300	385	30	1750	1200	423	517	775	10	70
V10E300P	P10V300	300	385	60	3500	2500	423	517	775	25	180
V14E300P	P14V300	300	385	125	6000	4500	423	517	775	50	400
V20E300P	P20V300	300	385	250	10000	6500	423	517	775	100	800
V07E320P	P7V320	320	420	32	1750	1200	459	561	840	10	65
V10E320P	P10V320	320	420	67	3500	2500	459	561	840	25	170
V14E320P	P14V320	320	420	136	6000	4500	459	561	840	50	380
V20E320P	P20V320	320	420	273	10000	6500	459	561	840	100	750
V07E385P	P7V385	385	505	36	1750	1200	558	682	1025	10	60
V10E385P	P10V385	385	505	75	3500	2500	558	682	1025	25	160
V14E385P	P14V385	385	505	150	6000	4500	558	682	1025	50	360
V20E385P	P20V385	385	505	300	10000	6500	558	682	1025	100	700
V07E420P	P7V420	420	560	40	1750	1200	612	748	1120	10	55
V10E420P	P10V420	420	560	80	3500	2500	612	748	1120	25	140
V14E420P	P14V420	420	560	160	6000	4500	612	748	1120	50	300
V20E420P	P20V420	420	560	320	10000	6500	612	748	1120	100	600
V07E440P	P7V440	440	585	44	1750	1200	643.5	786.5	1180	10	50
V10E440P	P10V440	440	585	85	3500	2500	643.5	786.5	1180	25	130
V14E440P	P14V440	440	585	170	6000	4500	643.5	786.5	1180	50	260
V20E440P	P20V440	440	585	340	10000	6500	643.5	786.5	1180	100	500
V07E460P	P7V460	460	615	48	1750	1200	675	825	1240	10	45
V10E460P	P10V460	460	615	90	3500	2500	675	825	1240	25	120
V14E460P	P14V460	460	615	180	6000	4500	675	825	1240	50	220

© 2015 Littelfuse, Inc.
Specifications are subject to change without notice.

Ratings & Specifications (Continued...)

Part Number	Branding	Maximum Rating (85°C)					Specifications (25°C)				
		Continuous		Transient			Varistor Voltage at 1mA DC Test Current		Maximum Clamping Voltage 8 x 20μs		Typical Capacitance
		RMS Volts	DC Volts	Energy 2ms	Peak Current 8 x 20μs						
		$V_{M(AC)}$	$V_{M(DC)}$	W_{TM}	I_{TM} 1 x Pulse	I_{TM} 2 x Pulse	V_{NOM} Min	V_{NOM} Max	V_C	I_{PK}	f = 1MHz
		(V)	(V)	(J)	(A)	(A)	(V)	(V)	(V)	(A)	(pF)
V20E460P	P20V460	460	615	360	10000	6500	675	825	1240	100	400
V07E510P	P7V510	510	670	52	1750	1200	738	902	1355	10	40
V10E510P	P10V510	510	670	92	3500	2500	738	902	1355	25	110
V14E510P	P14V510	510	670	185	6000	4500	738	902	1355	50	200
V20E510P	P20V510	510	670	365	10000	6500	738	902	1355	100	350
V10E550P	P10V550	550	745	95	3500	2500	819	1001	1500	25	100
V14E550P	P14V550	550	745	190	6000	4500	819	1001	1500	50	180
V20E550P	P20V550	550	745	370	10000	6500	819	1001	1500	100	300
V10E625P	P10V625	625	825	100	3500	2500	900	1100	1650	25	90
V14E625P	P14V625	625	825	200	6000	4500	900	1100	1650	50	160
V20E625P	P20V625	625	825	400	10000	6500	900	1100	1650	100	250

NOTE: 1. Average power dissipation of transients should not exceed 0.25W, 0.4W, 0.6W and 1.0W for 7mm, 10mm, 14mm, and 20mm model sizes, respectively.

Current Energy and Power Dissipation Ratings

Should transients occur in rapid succession, the average power dissipation is the energy (watt-seconds) per pulse times the number of pulses per second. The power so developed must be within the specifications shown on the Device Ratings and Specifications Table for the specific device. The operating values of a MOV need to be derated at high temperatures as shown above. Because varistors only dissipate a relatively small amount of average power they are not suitable for repetitive applications that involve substantial amounts of average power dissipation.

Figure 1A - Power Derating for Epoxy Coated

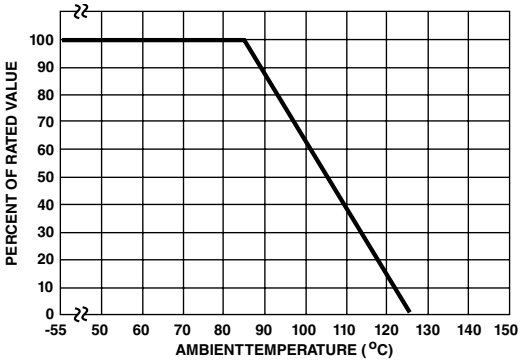

Figure 1B - Power Derating for Phenolic Coated

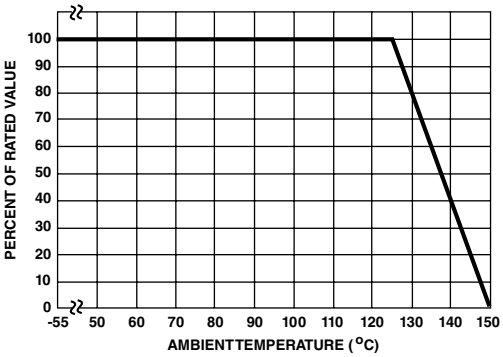

Peak Pulse Current Test Waveform

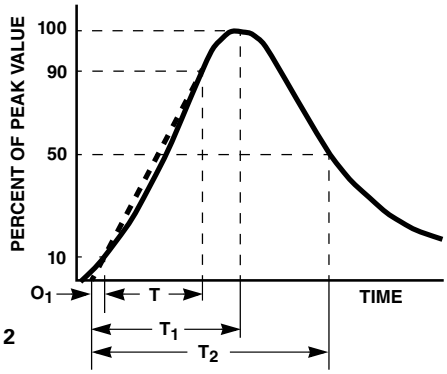

Figure 2

0_1 = Virtual Origin of Wave
T = Time from 10% to 90% of Peak
T_1 = Rise Time = 1.25 x T
T_2 = Decay Time

Example - For an 8/20 μs Current Waveform:
8μs = T_1 = Rise Time
20μs = T_2 = Decay Time

© 2015 Littelfuse, Inc.
Specifications are subject to change without notice.

Transient V-I Characteristics Curves

Maximum Clamping Voltage for 7mm Parts

V7E130(P)-V7E460(P)

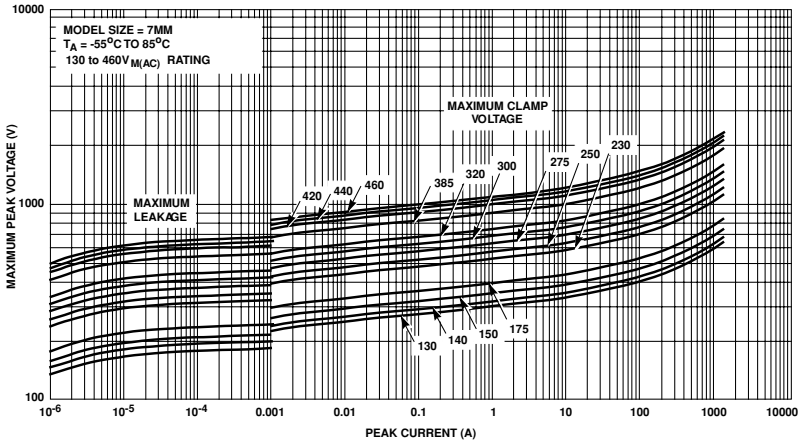

Figure 3

Maximum Clamping Voltage for 10mm Parts

V10E130(P)-V10E625(P)

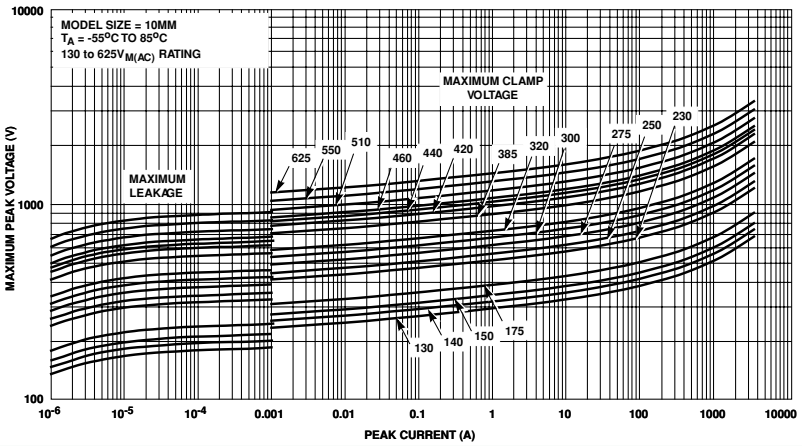

Figure 4

Maximum Clamping Voltage for 14mm Parts

V14E130(P) - V14E625(P)

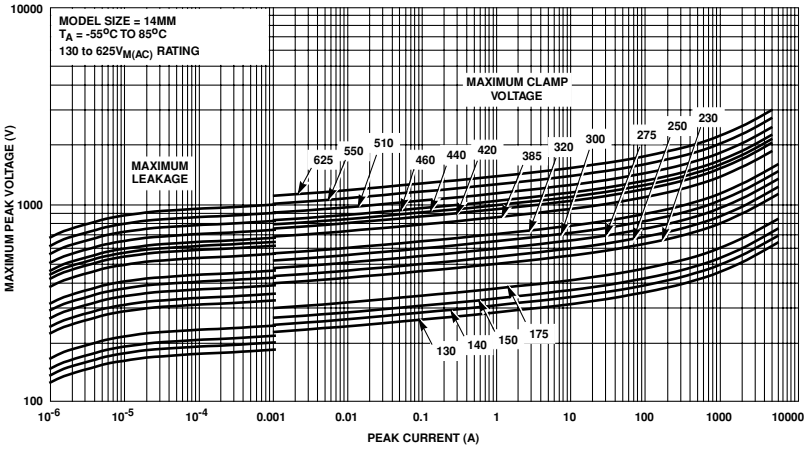

Figure 5

© 2015 Littelfuse, Inc.
Specifications are subject to change without notice.
Revised: 03/06/15

Transient V-I Characteristics Curves

Maximum Clamping Voltage for 20mm Parts

V20E130(P) - V20E625(P)

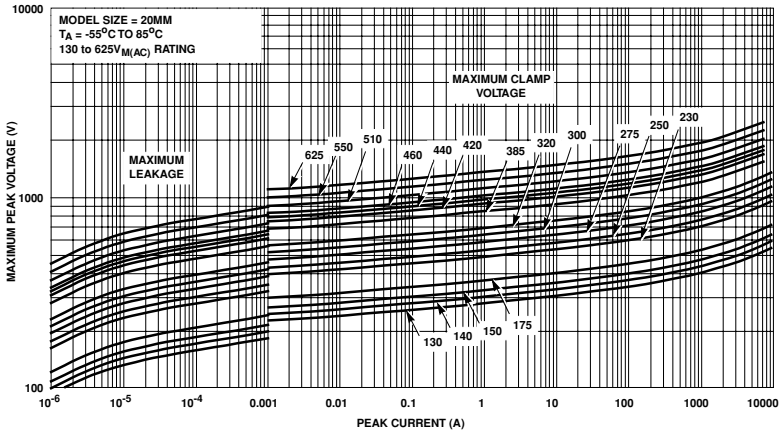

Figure 6

Pulse Rating Curves

Repetitive Surge Capability for 7mm Parts

V7E130(P) - V7E460(P)

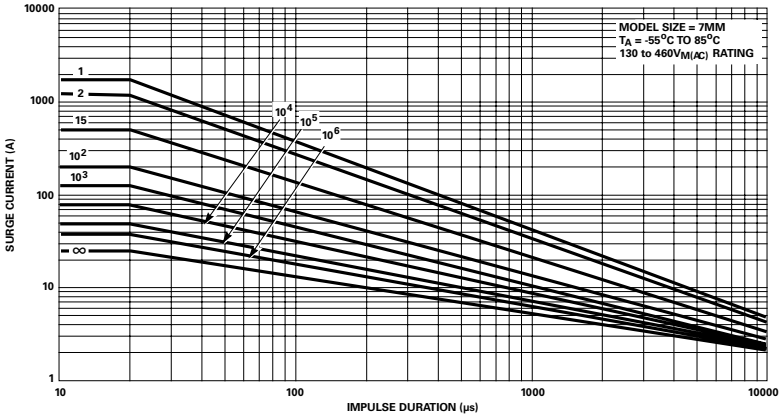

Figure 7

© 2015 Littelfuse, Inc.
Specifications are subject to change without notice.

Pulse Rating Curves

Repetitive Surge Capability for 10mm Parts

V10E130(P) - VIOE625(P)

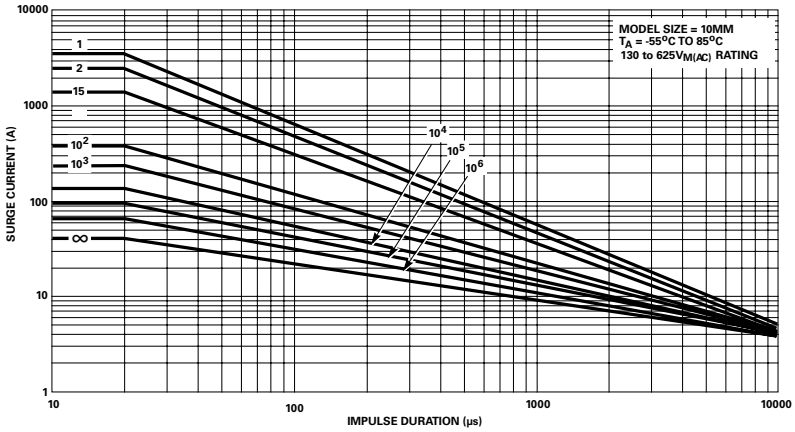

Figure 8

Repetitive Surge Capability for 14mm Parts

V14E130(P) -V14E625(P)

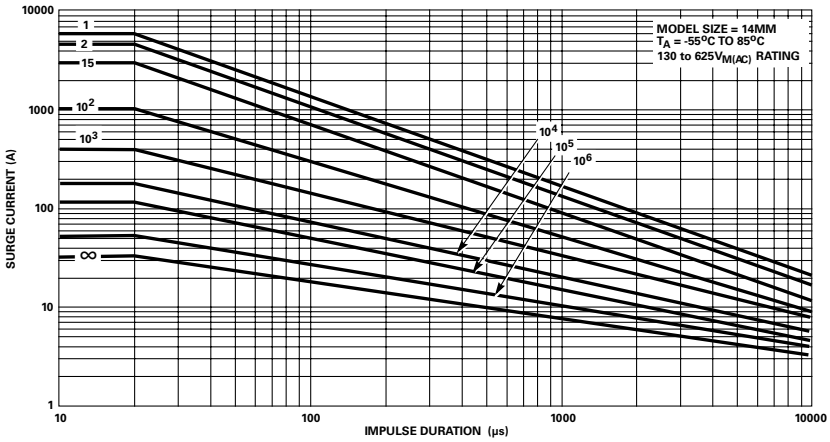

Figure 9

Repetitive Surge Capability for 20mm Parts

V20E130(P) -V20E625(P)

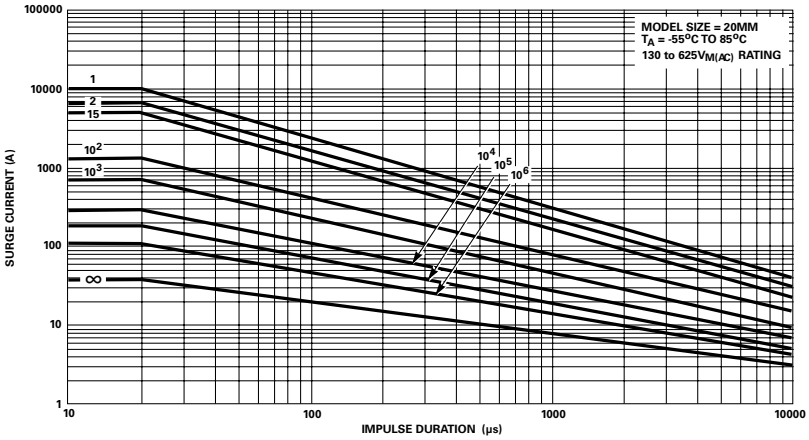

Figure 10

© 2015 Littelfuse, Inc.
Specifications are subject to change without notice.

Wave Solder Profile

Non Lead–free Profile

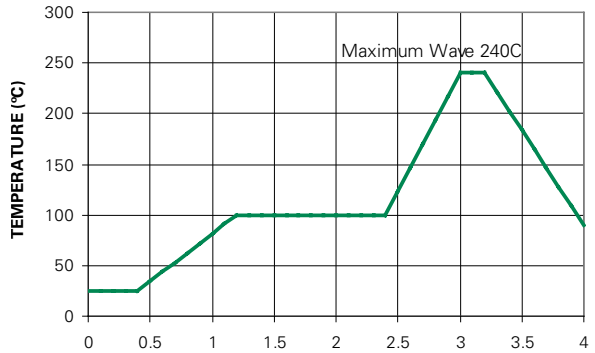

Figure 11

Lead–free Profile

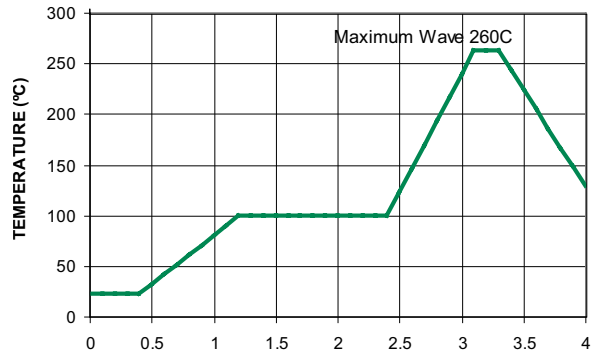

Figure 12

Physical Specifications

Lead Material	Copper Clad Steel Wire
Soldering Characteristics	Solderability per MIL–STD–202, Method 208
Insulating Material	Cured, flame retardant epoxy polymer meets UL94V–0 requirements
Device Labeling	Marked with LF, voltage, UL/CSA logos, and date code

Environmental Specifications

Operating Temperature	-55°C to +85°C
Storage Temperature	-55°C to +125°C
Humidity Aging	+85°C, 85% RH, 1000 hours +/-10% typical voltage change
Thermal Shock	+85°C to -40°C 5 times +/-10% typical voltage change
Solvent Resistance	MIL–STD–202, Method 215
Moisture Sensitivity	Level 1, J-STD-020

Phenolic Coating Option -- UltraMOV™ Varistor Series for Hi-Temperature Operating Conditions:

- Phenolic Coated UltraMOV™ Varistor Series devices are available with improved maximum operating temperature 125°C.
- These devices also have improved temperature cycling performance capability.
- Ratings and Specifications are as per standard UltraMOV™ Series except Hi–Pot Encapsulation (Isolation Voltage Capability) = 500V.
- Phenolic Coating is HALOGEN FREE. To order: change 'E' (Epoxy coating) in part number to 'P' (Phenolic coating; e.g. V20P230)
- See Part Numbering System section of this series for more information.
- Contact factory for further details.
- Product marking:

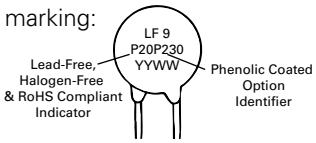

© 2015 Littelfuse, Inc.
Specifications are subject to change without notice.

Product Dimensions (mm)

Lead form options L1 and L3
(refer to table below)

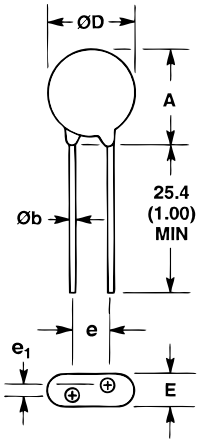

Lead form options L2 and L4
(refer to table below)

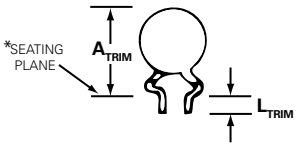

*Seating plane interpretation per IEC-717
(not available on tape or ammo pack)

Dimension	V_{RMS} Voltage Model	7mm Size		10mm Size		14mm Size		20mm Size	
		Min. mm (in)	Max. mm (in)	Min. mm (in)	Max. mm (in)	Min. mm (in)	Max. mm (in)	Min. mm (in)	Max. mm (in)
A	130-320	-	12 (0.472)	-	16 (0.630)	-	20 (0.787)	-	26.5 (1.043)
	385-625	-	13 (0.512)	-	17 (0.689)	-	20.5 (0.807)	-	28 (1.102)
ØD	All	-	9 (0.354)	-	12.5 (0.492)	-	17 (0.669)	-	23 (0.906)
e (Note 2)	All	4 (0.157)	6 (0.236)	6.5 (0.256)	8.5 (0.335)	6.5 (0.256)	8.5 (0.335)	9 (0.354)	11 (0.433)
e_1 (Note 3)	130-320	1.5 (0.059)	3.5 (0.138)	1.5 (0.059)	3.5 (0.138)	1.5 (0.059)	3.5 (0.138)	1.5 (0.059)	3.5 (0.138)
	385-625	2.5 (0.098)	5.5 (0.217)	2.5 (0.098)	5.5 (0.217)	2.5 (0.098)	5.5 (0.217)	2.5 (0.098)	5.5 (0.217)
E	130-320	-	5.6 (0.220)	-	5.6 (0.220)	-	5.6 (0.220)	-	5.6 (0.220)
	385-510	-	7.3 (0.287)	-	7.3 (0.287)	-	7.3 (0.287)	-	7.3 (0.287)
	550-625	-	8.3 (0.327)	-	8.3 (0.327)	-	8.3 (0.327)	-	-8.3 (0.327)
Ø b	All	0.585 (0.023)	0.685 (0.027)	0.76 (0.030)	0.86 (0.034)	0.76 (0.030)	0.86 (0.034)	0.76 (0.030) (Note 2)	0.86 (0.034) (Note 2)
A_{TRIM}	All	-	15 (0.591)	-	19.5 (0.768)	-	22.5 (0.886)	-	29.0 (1.142)
L (L2)	All	25.4 (1.00)	-	25.4 (1.00)	-	25.4 (1.00)	-	25.4 (1.00)	-
***L (L4)**	All	2.41 (0.095)	4.69 (0.185)	2.41 (0.095)	4.69 (0.185)	2.41 (0.095)	4.69 (0.185)	2.41 (0.095)	4.69 (0.185)

NOTES:
1. Measurements displayed in Millimeters (Inches in parentheses).
2. Standard lead space.
3. For in-line lead option L3, dimension e_1 is "zero". Straight lead form option L1 shown.

For information about bulk packaging quantities, please refer to the Ordering Notes section at the end of this document.

© 2015 Littelfuse, Inc.
Specifications are subject to change without notice.
Revised: 03/06/15

Tape Specifications for Reel and Ammo Pack Items (Refer to dimensions on following page)

7mm Devices

CRIMPED LEADS "L2"

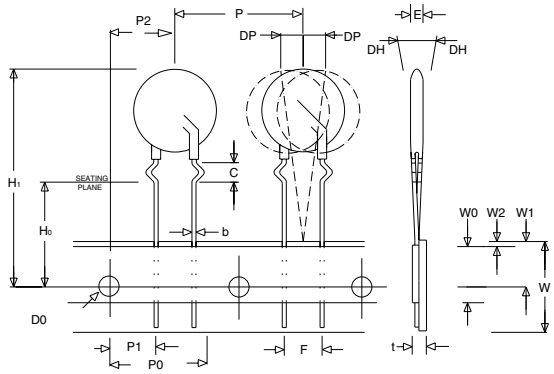

INLINE LEADS "L3"

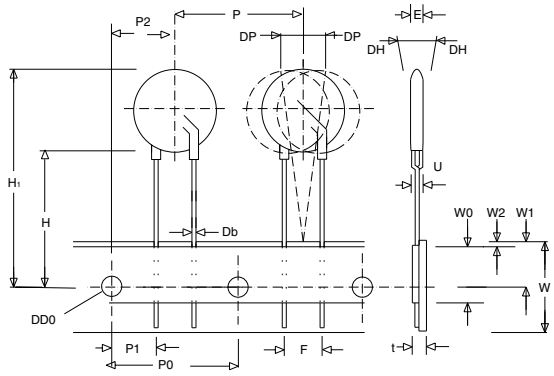

STRAIGHT LEADS "L1"

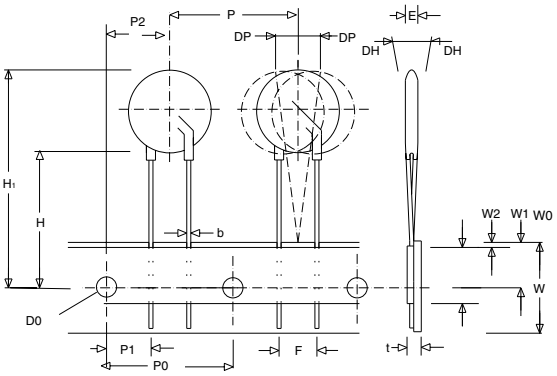

10, 14 and 20mm Devices

CRIMPED LEADS "L2"

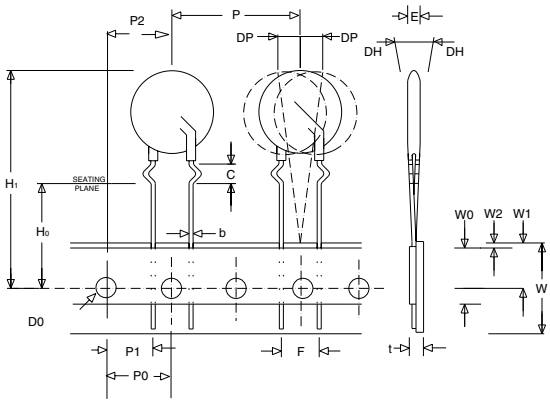

INLINE LEADS "L3"

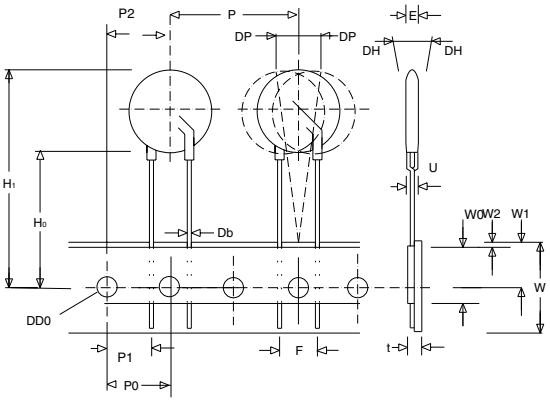

STRAIGHT LEADS "L1"

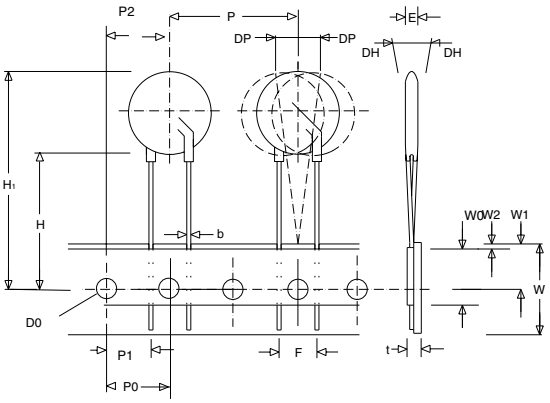

© 2015 Littelfuse, Inc.
Specifications are subject to change without notice.

Tape Specifications for Reel and Ammo Pack Items (Refer to drawings on previous page)

- Conforms to ANSI and EIA specifications.
- Can be supplied to IEC Publication 286-2.
- Radial devices on tape are offered with crimped leads, straight leads, or in-line leads. See Ordering Information.
- For 10mm devices 'P' (component pitch) is 12.7mm when 'F' (lead space) is 5mm.
- 7mm parts are available on tape and reel up to 460 VAC only
- 10mm parts are available on tape and reel up to 510 VAC only
- 14mm and 20mm parts are available on tape and reel up to 550 VAC only
- 7mm devices with 7.5mm lead spacing option will be taped at 25.4mm component pitch and 500 pieces per reel
- 10mm devices with 5.0mm lead spacing option will be taped at 12.7mm component pitch and 1000 pieces per reel

Symbol	Description	Model Size			
		7mm	10mm	14mm	20mm
B_1	Component Top to Seating Plane	15 Max	19.5 Max	22.5 Max	29 Max
C	Crimp Length	2.4 Typ	2.6 Typ	2.6 Typ	2.6 Typ
P	Pitch of Component	12.7 +/- 1.0	25.4 +/- 1.0	25.4 +/- 1.0	25.4 +/- 1.0
P_0	Feed Hole Pitch	12.7 +/- 0.2	12.7 +/- 0.2	12.7 +/- 0.2	12.7 +/- 0.2
P_1	Feed Hole Center to Pitch	3.85 +/- 0.7	8.85 +/- 0.7	8.85 +/- 0.7	7.70 +/- 0.7
P_2	Hole Center to Component Center	6.35 +/- 0.7	12.7 +/- 0.7	12.7 +/- 0.7	12.7 +/- 0.7
F	Lead to Lead Distance	5.0 +/- 0.8	7.5 +/- 0.8	7.5 +/- 0.8	10.0 +/- 0.8
Δh	Component Alignment	2.0 Max	2.0 Max	2.0 Max	2.0 Max
W	Tape Width	18.0 +1.0 / -0.5	18.0 +1.0 / -0.52	18.0 +1.0 / -0.5	18.0 +1.0 / -0.5
W_0	Hold Down Tape Width	12.0 +/- 0.3	12.0 +/- 0.3	12.0 +/- 0.3	12.0 +/- 0.3
W_1	Hole Position	9.0 +0.75 / -0.50	9.0 +0.75 / - 0.50	9.0 +0.75 / 0.50	9.0 +0.75 / -0.50
W_2	Hold Down Tape Position	0.5 Max	0.5 Max	0.5 Max	0.5 Max
H	Height from Tape Center to Component Base	18.0 +2.0 / -0.0	18.0 +2.0 / -0.0	18.0 +2.0 / -0.0	18.0 +2.0 / -0.0
H_0	Seating Plane Height	16.0 +/- 0.5	16.0 +/- 0.5	16.0 +/- 0.5	16.0 +/- 0.5
H_1	Component Height	32.0 Max	36.0 Max	40.0 Max	46.5 Max
D_0	Feed Hole Diameter	4.0 +/- 0.2	4.0 +/- 0.2	4.0 +/- 0.2	4.0 +/- 0.2
t	Total Tape Thickness	0.7 +/- 0.2	0.7 +/- 0.2	0.7 +/- 0.2	0.7 +/- 0.2
Δp	Component Alignment	3° Max, 1.00mm	3° Max, 1.00mm	3° Max, 1.00mm	3° Max, 1.00mm

For information on tape and reel packaging quantities, please refer to the Ordering Notes section at the end of this document.

© 2015 Littelfuse, Inc.
Specifications are subject to change without notice.

Part Numbering System

BASE PART CODES
(See Ratings & Specifications tables and notes below)

OPTION CODES
(See notes below)

V XX E XXX P | LX X X XXXXX

For "VARISTOR"

DISC DIAMETER:
07, 10, 14, or 20 (mm)

ENCAPSULATION:
E = Epoxy
P = Phenolic (Halogen Free)

$V_{M(AC)RMS}$:
130 to 625 (V)

LEAD-FREE, HALOGEN-FREE AND RoHS COMPLIANT INDICATOR

OTHER NONSTANDARD OPTIONS
X2855: Nickel barrier coated wire option
(see notes below)

NONSTANDARD LEAD SPACING OPTIONS:
Blank: Standard lead spacing (see Dimensions Table)
5: 5mm Lead Spacing
7: 7.5mm Lead Spacing
1: 10mm Lead Spacing

PACKAGING:
B: Bulk Pack
T: Tape and Reel
A: Ammo Pack

LEAD FORMATION:
L1: Straight
L2: Crimped
L3: In-Line
L4: Trim/Crimp (Bulk pack only)

UltraMOV™ is a trademark of Littelfuse, Inc.

Ordering Notes:

For standard parts, use the **BASE PART** designator only.

For parts with non-standard options (such as additional form, packaging and lead space options) use, **BASE PART** + **OPTION CODE**.

OPTION CODE items are subject to availability and minimum order requirements. Please contact a Littelfuse representative if you require additional information

OPTION CODES:

X2855: Nickel Barrier COATED WIRE OPTION

All standard parts use tinned copper clad steel wire. Nickel Barrier Coated Wire is available as an option, consisting of Copper Wire with a flashing of Nickel followed by a top coating of Tin.

To order: append standard model **BASE PART** number with "X2855." Example:

Standard Model	Order As
V18ZA40P	V18ZA40P**X2855**

PACKAGING:

Littelfuse UltraMOV™ varistors are shipped standard in bulk pack with straight leads and lead spacing outlined in the dimensions sections of this document. Contact a Littelfuse representative to discuss non-standard options.

Standard Part Default Conditions

Device Size	Part #	Lead Space	Packaging
7mm	V07E–	5.0-/+1	Bulk
10mm	V10E–	7.5-/+1	Bulk
14mm	V14E–	7.5-/+1	Bulk
20mm	V20E–	10.0-/+1	Bulk

Standard Bulk Pack Quantity

Varistor Voltage	Standard Bulk Pack Quantity			
	Varistor Model Size			
	7mm	10mm	14mm	20mm
130 – 275	1500	1000	700	500
300 – 460	1500	700	600	400
510 – 625	1500	700	500	400

Tape & Reel Quantity

Varistor Voltage	Shipping Quantity Per Reel			
	7mm	10mm	14mm	20mm
130 – 275	1000	500	500	500
300 – 625	1000	500	400	400

© 2015 Littelfuse, Inc.
Specifications are subject to change without notice.

Общество с ограниченной ответственностью «МосЧип» ИНН 7719860671 / КПП 771901001
Адрес: 105318, г.Москва, ул.Щербаковская д.3, офис 1107

Данный компонент на территории Российской Федерации

Вы можете приобрести в компании MosChip.

Для оперативного оформления запроса Вам необходимо перейти по данной ссылке:

http://moschip.ru/get-element

Вы можете разместить у нас заказ для любого Вашего проекта, будь то серийное производство или разработка единичного прибора.

В нашем ассортименте представлены ведущие мировые производители активных и пассивных электронных компонентов.

Нашей специализацией является поставка электронной компонентной базы двойного назначения, продукции таких производителей как XILINX, Intel (ex.ALTERA), Vicor, Microchip, Texas Instruments, Analog Devices, Mini-Circuits, Amphenol, Glenair.

Сотрудничество с глобальными дистрибьюторами электронных компонентов, предоставляет возможность заказывать и получать с международных складов практически любой перечень компонентов в оптимальные для Вас сроки.

На всех этапах разработки и производства наши партнеры могут получить квалифицированную поддержку опытных инженеров.

Система менеджмента качества компании отвечает требованиям в соответствии с ГОСТ Р ИСО 9001, ГОСТ РВ 0015-002 и ЭС РД 009

Офис по работе с юридическими лицами:

105318, г.Москва, ул.Щербаковская д.3, офис 1107, 1118, ДЦ «Щербаковский»

Телефон: +7 495 668-12-70 (многоканальный)

Факс: +7 495 668-12-70 (доб.304)

E-mail: info@moschip.ru

Skype отдела продаж:
moschip.ru
moschip.ru_4
moschip.ru_6
moschip.ru_9