MADE IN THE USA SINCE 1936 RELIABILITY BEYOND MEASURE

Wide-Vue Analog Panel Meters

- UL Recognized - File # E91015
  Except for the Wattmeters & Frequency Meters
- Clear acrylic window for wide viewing area
- Rugged black plastic case
- Black spade pointer for easy distant reading
- Optional: Behind-panel mounting bezel kit

The Specification and Dimensions are on pages 8, 9 & 10

Ordering Information

AC Milliammeters Iron Vane Movement				
Range	Approx. Impedance (Ohms) @ 60 Hz	Model / Size and Catalog No.		
		2 - 1/2" Model 1257	3 - 1/2" Model 1357	4 - 1/2" Model 1359
0 - 10	1,650	06294	06625	06665
0 - 50	80	06295	06630	06670
0 - 100	17.2	06296	06640	06680
0 - 250	3.15	06297	06650	06690
0 - 500	0.9	06300	06660	06699
0 - 1000	.213	< >	35065	< >
< > Available on special order				

Ordering Information

AC Ammeters Iron Vane Movement				
Range	Approx. Impedance (Ohms) @ 60Hz	Model / Size and Catalog No.		
		2 - 1/2" Model 1257	3 - 1/2" Model 1357	4 - 1/2" Model 1359
0 - 1	.213	02560	03130	03260
0 - 1.5	.105	02570	03140	03270
0 - 2	.065	< >	03150	03280
0 - 3	.025	02575	03160	03290
0 - 5	.008	02580	03170	03300
0 - 10	.004	02590	03180	03310
0 - 10	.008	< >	35073 *	35077 *
0 - 15	.0025	02599	03190	03320
0 - 25	.002	02609	03200	03330
0 - 25	.008	< >	35074 *	35078 *
0 - 30	.0015	02615	03205	03335
0 - 50	.001	02619	03210	03340
0 - 50	.008	< >	35075 *	35079 *
0 - 75	.0002	< >	03215	03345
0 - 75	.008	< >	35076 *	35080 *
0 - 100	.008	02622 *	03220 *	03350 *
0 - 150	.008	02624 *	03230 *	03360 *
0 - 200	.008	02626 *	03240 *	03370 *
0 - 300	.008	02627 *	03250 *	03380 *
< > Available on special order				

* These meters are 5 amp meters to be used with an external current transformer.

Additional current transformer ranges can be achieved through wrapping the primary and secondary wires.

AC Dual Range Ammeter/Voltmeter				
Range	Approx. Impedance (Ohms) @ 60 Hz	Model / Size and Catalog No.		
		2 - 1/2" Model 1257	3 - 1/2" Model 1357	4 - 1/2" Model 1359
0 - 150V and 0 - 5A	15030 and .021	---------	03129	03259
< > Available on special order				

Ordering Information

AC Voltmeters Iron Vane Movement				
Range	Approx. Impedance (Ohms) @ 60 Hz	Model / Size and Catalog No.		
		2 - 1/2" Model 1257	3 - 1/2" Model 1357	4 - 1/2" Model 1359
0 - 5	33	< >	10160	10260
0 - 10	133	09670	10170	10270
0 - 15	300	09675	10180	10280
0 - 25	833	09680	10190	10290
0 - 50	3,333	09690	10200	10300
0 - 100	16,333	09695	10210	10310
0 - 150	25,000	09700	10220	10320
0 - 250	41,166	09705	10230	10330
0 - 300	50,000	09710	10240	10340
0 - 500	83,333	09715 *	10250 *	10350 *
< > Available on special order				

* External multipliers (model 183) are furnished on AC meters having a range of 500 volts or higher.

AC Voltmeters Rectified Self-Shielding Movement				
Range	Approx. Impedance (Ohms) @ 60 Hz	Model / Size and Catalog No.		
		2 - 1/2" Model 1247	3 - 1/2" Model 1347	4 - 1/2" Model 1349
0 - 5	2000 Ohms Per Volt	10015	10020	10090
0 - 10		10016	10030	10100
0 - 15		< >	10040	10110
0 - 50		< >	10050	10120
0 - 150		10017	10060	10130
0 - 300		10018	10070	10140
< > Available on special order				

Ordering Information

DC Microammeters Self-Shielding Movement						
Range	Approx. Impedance (Ohms) @ 60 Hz		Model / Size and Catalog No.			
			1 - 1/2" Model 1212	2 - 1/2" Model 1227	3 - 1/2" Model 1327	4 - 1/2" Model 1329
0 - 50	1800	(5500) *	04294	04310	04380	04480
0 - 100	1800		04295	04320	04390	04490
0 - 200	1100		04296	04330	04400	04500
0 - 500	90	(190) *	04297	04340	04410	04510
25 -0-25	1800		04298	< >	04420	04520
50-0-50	1800	(5500) *	04302	04350	04430	04530
100-0-100	1100		04300	04351	04440	04540
500-0-500	43		04301	04352	04450	04550
* Impedance of Model 1212 shown in ( )						
< > Available on special order						

DC Taut-Band Microammeters Iron Vane Movement					
Range	Approx. Impedance (Ohms) @ 60 Hz	Model / Size and Catalog No.			
		1 - 1/2" Model 1212T	2 - 1/2" Model 1227T	3 - 1/2" Model 1327T	4 - 1/2" Model 1329T
0 - 10	4900	< >	04303	04359	04459
0 - 15	1960 (5500) *	04601	04304	04361	04461
0 - 25	1960	04602	04306	04371	04471
0 - 50	960	04603	04311	04381	04481
0 - 100	500	04604	04321	04391	04491
0 - 200	234	04605	04331	04401	04501
* Impedance of Model 1212 shown in ( )					
< > Available on special order					

Simpson®

MADE IN THE USA SINCE 1936 | RELIABILITY BEYOND MEASURE

Wide-Vue Analog Panel Meters

Ordering Information

DC Milliammeters Self-Shielding Movement

Range	Approx. Impedance (Ohms) @ 60 Hz		Model / Size and Catalog No.			
			1 - 1/2" Model 1212	2 - 1/2" Model 1227	3 - 1/2" Model 1327	4 - 1/2" Model 1329
0 - 1	43.0		06163	06175	06310	06470
0 - 3	2.0		< >	06180	06320	06480
0 - 5	2.0	(20) †	06164	06190	06330	06490
0 - 10	10.0	(2.2) †	06165	06200	06340	06495
0 - 15	6.6	(2.2) †	06166	06210	06350	06502
0 - 20	5.0		< >	06215	06360	06524
0 - 25	4.0	(6.0) †	06167	06220	06370	06530
0 - 50	2.0	(3.0) †	06168	06230	06380	06540
0 - 100	1.0	(1.5) †	06169	06240	06390	06550
0 - 150	.66	(1.0) †	06170	06250	06400	06560
0 - 200	.50	(.75) †	06171	06260	06410	06570
0 - 250	.40	(.60) †	06172	06270	06420	06580
0 - 300	.33	(.50) †	06173	06280	06430	06590
0 - 500	.20	(.30) †	06174	06290	06440	06600
0 - 750	.13		< >	< >	06450	06610
0 - 1000	.05		< >	06292	06460	06620

† Impedance of Model 1212 shown in ( )

< > Available on special order

DC Ammeters Self-Shielding Movement

Range	Approx. Impedance (Ohms) @ 60 Hz	Model / Size and Catalog No.			
		1 - 1/2" Model 1212	2 - 1/2" Model 1227	3 - 1/2" Model 1327	4 - 1/2" Model 1329
0 - 1	.050	02431	02440	02640	02820
0 - 1.5	.033	< >	02450	02650	02830
0 - 2	.025	02432	02460	02660	02840
0 - 3	.0166	02433	02470	02670	02850
0 - 5	.010	02434	02480	02680	02860
0 - 10	.005	02435	02490	02690	02870
0 - 15	.0033 *	02436 †	02500	02700	02880
0 - 25	.0020 *	02437 †	02510	02710	02890
0 - 30	.0017	< >	02520	02720	02900
0 - 50	.001 *	02438 †	02530	02730	02910
0 - 100	10.0	< >	02540 †	02740 †	02920 †
0 - 150	10.0	< >	02550 †	02750 †	02930 †
0 - 200	10.0	< >	02552 †	02760 †	02940 †
0 - 300	10.0	< >	02554 †	02770 †	02950 †
0 - 500	10.0	< >	< >	02780 †	02960 †
15-0-15	.0033	< >	< >	02790	< >
30-0-30	.0017	< >	< >	02800	< >
50-0-50	.001	< >	< >	02810	< >

† 1 - 1/2" DC current meters are self-contained through 10 amps.

15 amps and higher are supplied as 50 mV meters to be used with external shunts.

2 - 1/2", 3 - 1/2" and 4 - 1/2 " DC current meters are self-contained through 50 amps.

Higher range DC current meters are 50 mV meters to be used with external shunts.

< > Available on special order

* Model 1212 only - 10 Ohms

Simpson®

MADE IN THE USA SINCE 1936 | RELIABILITY BEYOND MEASURE

Wide-Vue Analog Panel Meters

Ordering Information

Wattmeters / Dynamometer Type

Not UL

Range	Maximum		Model / Size and Catalog No.
	Volts	Amps	4 - 1/2" Model 1379
0 - 10	150	.175	10930 *
0 - 20	150	.400	10940 *
0 - 75	150	1.0	10960
0 - 150	150	2.0	10970
0 - 300	150	4.0	10975
0 - 600	300	4.0	10980
0 - 750	150	10.0	10990
0 - 1500	300	10.0	11000
0 - 3000	300	20.0	11010

* Compensated wattmeters:

Calibrated for either magnetic or non-magnetic panels and for a frequency of 25 - 125 Hz

DC Millivoltmeters Self-Shielding Movement

Range	Approx. Impedance (Ohms) @ 60 Hz	Model / Size and Catalog No.			
		1 - 1/2" Model 1212	2 - 1/2" Model 1227	3 - 1/2" Model 1327	4 - 1/2" Model 1329
0 - 50	10.0	07005	07010	07020	07030
50-0-50	20.0	< >	< >	07021	07031

< > Available on special order

DC Voltmeters Self-Shielding Movement

Range	Approx. Impedance (Ohms) @ 60 Hz	Model / Size and Catalog No.			
		1 - 1/2" Model 1212	2 - 1/2" Model 1227	3 - 1/2" Model 1327	4 - 1/2" Model 1329
0 - 5	1000 Ohms Per Volt	09540	09550	09720	09870
0 - 8		< >	< >	09730	09880
0 - 10		09541	09560	09740	09890
0 - 15		09542	09570	09750	09900
0 - 25		09543	09580	09760	09910
0 - 30		09544	09590	09770	09920
0 - 50		09545	09600	09780	09930
0 - 100		09546	09610	09790	09940
0 - 150		09547	09620	09800	09950
0 - 200		< >	09622	09810	09960
0 - 250		< >	09623	09820	09970
0 - 300		< >	09630	09830	09980
0 - 300	2000 Ohms Per Volt	09548	< >	< >	< >
0 - 500		09549 *	09640	09840	09990
0 - 750		< >	09650 *	09850	10000
0 - 1000		< >	09660 *	09860 *	10010 *

< > Available on special order

* External multipliers (Model 183) are furnished

on 1 - 1/2" DC Meters 500 volts or higher;

on 2 - 1/2" DC Meters 750 volts or higher;

and on 3 - 1/2" and 4 - 1/2" DC Meters 1000 volts or higher.

All others have self-contained multipliers.

Ordering Information

Percent Motor Load Meters

Type	Rating	Model / Size and Catalog No.			
		3 - 1/2" Model 1327	3 - 1/2" Model 1357	4 - 1/2" Model 1329	4 - 1/2" Model 1359
DC (Note 1)	30 mV	07028		07029	
AC (Note 2)	5 amps		03171		03301

Note 1: DC load meters require an external shunt and potentiometer (not supplied). Use 8 to 10Ω, 2 watt wire-wound potentiometer.

The appropriate shunt should be selected from accessory section and ordered separately.

To select the proper shunt, first obtain the full load current rating of your motor from the name plate, manufacturer's specifications of N.E.C. listing. Multiply that rating by 1.25 and select and order the shunt with an amps rating as large or slightly larger than the calculated value.

Installation and calibration instructions are included with the meter .

Note 2: AC load meters must be used with external donut transformers. Complete instructions for proper selection are included with each AC load meter.

Advance assistance in selecting the appropriate transformer and determining the correct primary / secondary turns ratio can be obtained from a Simpson technical service representative or authorized service center.

Meters come with color coded dial.

Green 0 - 100% Yellow 100 - 125% Red 125 - 150%

4 - 20mA Process Meters

Size	Scale	Model	Catalog No.
3 - 1/2"	0 - 100%	1327	35025
4 - 1/2"	0 - 100%	1329	35026

Frequency Meters Self-Shielding Movement Not UL

Range	Voltage	Model / Size and Catalog No.		
		2 - 1/2" Model 1287	3 - 1/2" Model 1387	4 - 1/2" Model 1389
45 - 55 Hz	120V	35100	35106	35112
55 - 65 Hz	120V	35102	35108	35114
380 - 420 Hz	120V	35104	35110	35116
45 - 55 Hz	240V	35101	35107	35113
55 - 65 Hz	240V	35103	35109	35115
380 - 420 Hz	240V	35105	35111	35117

Wide-Vue Analog Panel Meters

Specifications	
Accuracy	± 2% F.S. (Iron-Vane), ± 3 F.S. (Rectified)
Movement	Models 1212, 1212T: Small Core Magnet Models 1247, 1347, 1349: Annular, rectifier Models 1257, 1357, 1359: Iron-vane, magnetically damped
Tracking	± 3%
Shielding	Calibration is unaffected by magnetic panel mounting.
Response Time	1.5 seconds maximum
Overload (1 sec.)	10 times F.S.
Overload (Continuous)	1.5 times F.S.
Repeatability	2%: AC Current, DC Process 3%: AC Voltage, DC Voltage, Wattmeters 0.5%: DC Current
Dial	Sharp clear scale. Each dial arc is calibrated to track the specific type of movement used.
Resistance	± 15% of meter impedance
Operating Temperature	- 4ºF to + 149ºF (- 20ºC to + 65ºC)
Case	High density black plastic
Pointer	Model 1212: Black lance All other models: Spade with black matte finish
Scale Length	Model 1212, 1212T: 1.50” (38.1mm) Model 1227, 1227T, 1247, 1257: 2.30” (58.4mm) Model 1327, 1327T, 1347, 1357, 1377: 3.14” (79.9mm) Model 1329, 1329T, 1349, 1359, 1379: 3.93” (100mm)
Net Weight	Model 1212, 1212T: 2 oz. (0.06 kg) Model 1257: 4 oz. (0.11 kg) Model 1359: 5 oz. (0.14 kg) Model 1227, 1227T: 6 oz. (0.17 kg) Model 1327, 1327T, 1347: 8 oz. (0.23 kg) Model 1329, 1329T, 1349, 1377: 9 oz. (0.26 kg) Model 1379: 10 oz. (0.28 kg)

Wide-Vue Analog Panel Meters

Dimensions

1 - 1/2” Model 1212, 1212T

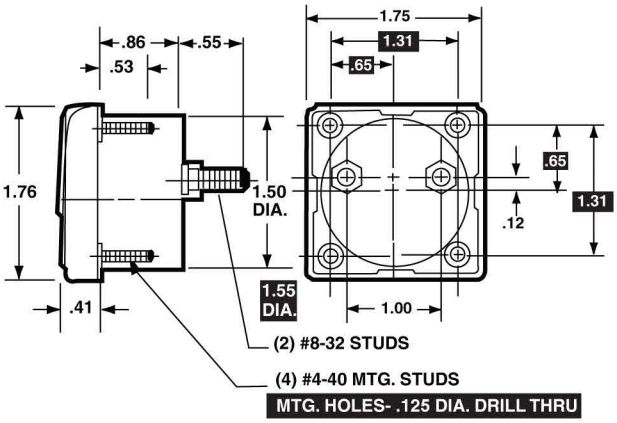

2 - 1/2” Model 1287

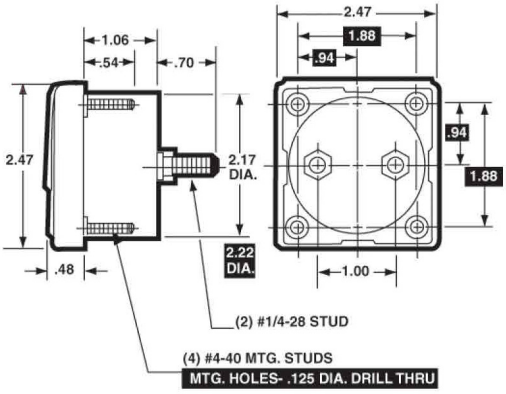

2 - 1/2” Model 1227, 1227T, 1247, 1257

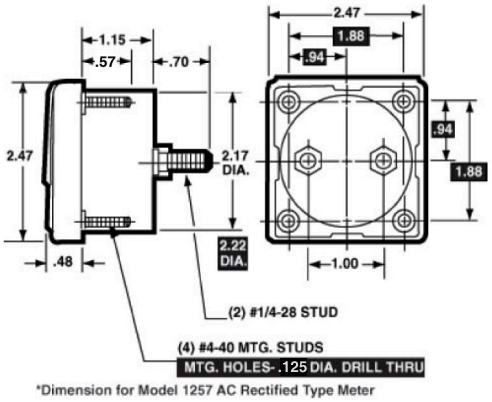

*Dimension for Model 1257 AC Rectified Type Meter

4 - 1/2” Model 1329, 1329T, 1349, 1359

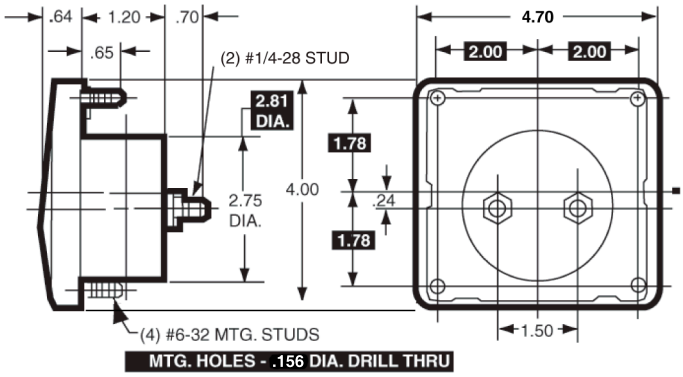

3 - 1/2” Model 1387

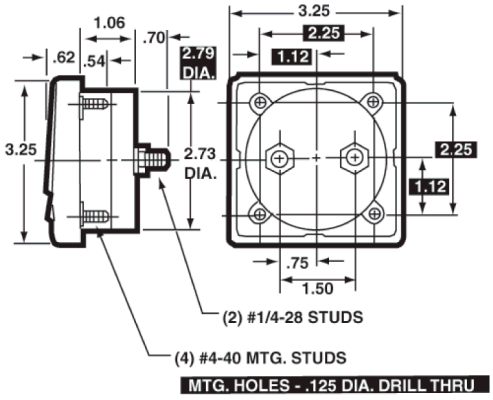

4 - 1/2” Model 1389

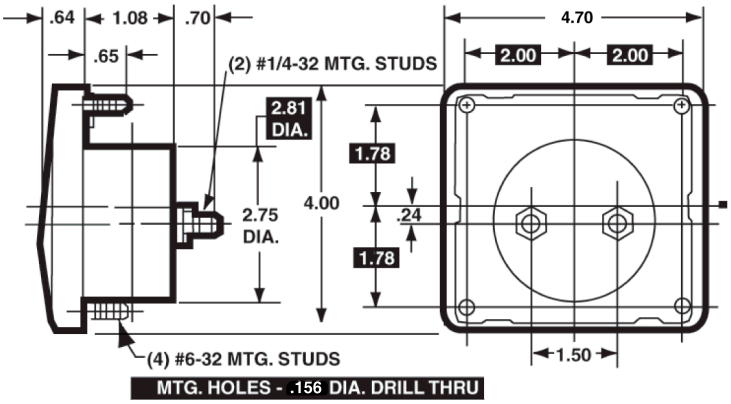

Dimensions

4 - 1/2” Model 1379

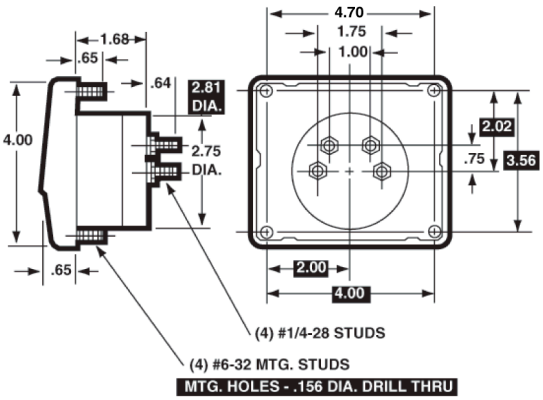

3 - 1/2” Model 1327, 1327T, 1347, 1357

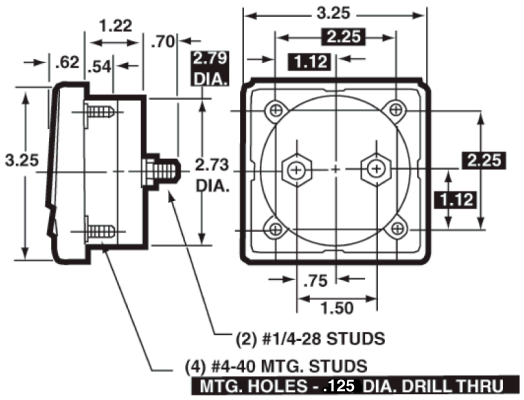

Общество с ограниченной ответственностью «МосЧип» ИНН 7719860671 / КПП 771901001
Адрес: 105318, г.Москва, ул.Щербаковская д.3, офис 1107

Данный компонент на территории Российской Федерации

Вы можете приобрести в компании MosChip.

Для оперативного оформления запроса Вам необходимо перейти по данной ссылке:

http://moschip.ru/get-element

Вы можете разместить у нас заказ для любого Вашего проекта, будь то серийное производство или разработка единичного прибора.

В нашем ассортименте представлены ведущие мировые производители активных и пассивных электронных компонентов.

Нашей специализацией является поставка электронной компонентной базы двойного назначения, продукции таких производителей как XILINX, Intel (ex.ALTERA), Vicor, Microchip, Texas Instruments, Analog Devices, Mini-Circuits, Amphenol, Glenair.

Сотрудничество с глобальными дистрибьюторами электронных компонентов, предоставляет возможность заказывать и получать с международных складов практически любой перечень компонентов в оптимальные для Вас сроки.

На всех этапах разработки и производства наши партнеры могут получить квалифицированную поддержку опытных инженеров.

Система менеджмента качества компании отвечает требованиям в соответствии с ГОСТ Р ИСО 9001, ГОСТ РВ 0015-002 и ЭС РД 009

Офис по работе с юридическими лицами:

105318, г.Москва, ул.Щербаковская д.3, офис 1107, 1118, ДЦ «Щербаковский»

Телефон: +7 495 668-12-70 (многоканальный)

Факс: +7 495 668-12-70 (доб.304)

E-mail: info@moschip.ru

Skype отдела продаж:
moschip.ru
moschip.ru_4
moschip.ru_6
moschip.ru_9