BAT54

Small signal Schottky diodes

Features

- Low conduction and reverse losses
- Negligible switching losses
- Low forward and reverse recovery times
- Extremely fast switching
- Surface mount device
- Low capacitance diode

Description

The BAT54 series uses 40 V Schottky barrier diodes packaged in SOD- 23, SOD-323, SOD-523, SOT-23, SOT-323, or SOT-666.

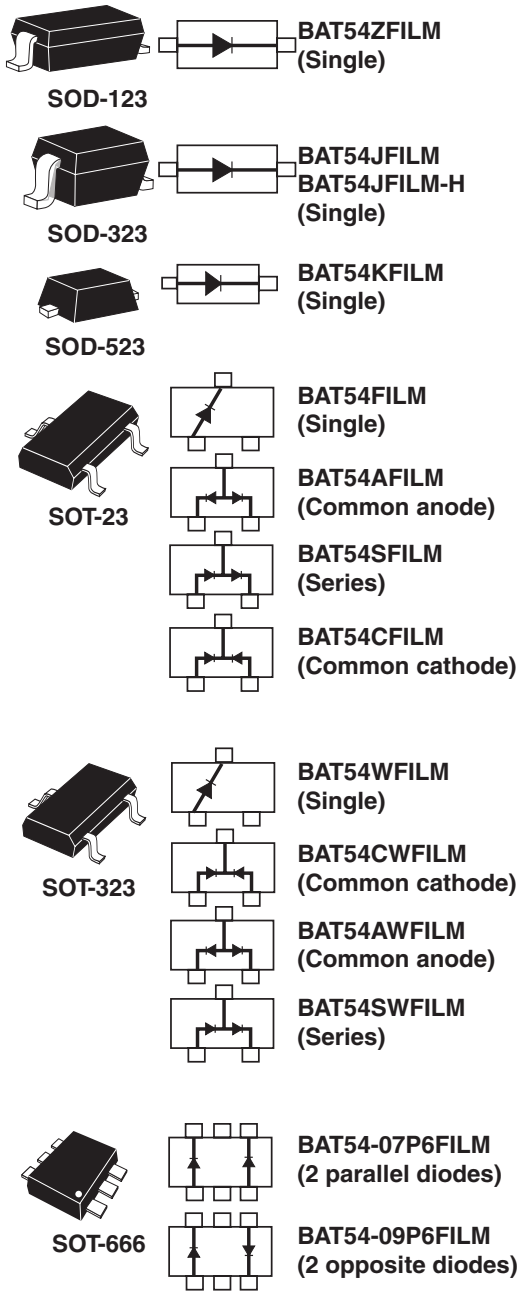

Configurations in top view

Table 1. Device summary

Symbol	Value
I_F	300 mA
V_{RRM}	40 V
C (typ)	7 pF
T_j (max)	150 °C

1 Characteristics

Table 2. Absolute ratings (limiting values at Tj = 25 °C, unless otherwise specified)

Symbol	Parameter		Value	Unit
V_{RRM}	Repetitive peak reverse voltage		40	V
I_F	Continuous forward current		300	mA
I_{FSM}	Surge non repetitive forward current	t_p = 10 ms Sinusoidal	1	A
T_{stg}	Storage temperature range		-65 to +150	°C
T_j	Operating junction temperature range		-40 to +150	°C
T_L	Maximum soldering temperature		260	°C

Table 3. Thermal parameters

Symbol	Parameter		Value	Unit
$R_{th(j-a)}$	Junction to ambient(1)	SOT-23, SOD-123	500	°C/W
		SOT-323, SOD-323,	550	
		SOD-523, SOT-666	600	

1. Epoxy printed circuit board with recommended pad layout

Table 4. Static electrical characteristics

Symbol	Parameter	Test conditions		Min.	Typ.	Max.	Unit
I_R(1)	Reverse leakage current	T_j = 25 °C	V_R = 30 V			1	µA
		T_j = 100 °C				100	
V_F(2)	Forward voltage drop	T_j = 25 °C	I_F = 0.1 mA			240	mV
			I_F = 1 mA			320	
			I_F = 10 mA			400	
			I_F = 30 mA			500	
			I_F = 100 mA			900	

1. Pulse test: t_p = 5 ms, $\delta < 2$ %
2. Pulse test: t_p = 380 µs, $\delta < 2$ %

Table 5. Dynamic characteristics

Symbol	Parameter	Test conditions	Min.	Typ.	Max.	Unit
C	Diode capacitance	V_R = 1 V, F = 1 MHz		7	10	pF
t_{rr}	Reverse recovery time	I_F = 10 mA, I_R = 10 mA, T_j = 25 °C I_{rr} = 1 mA, R_L = 100 Ω			5	ns

Figure 1. Average forward power dissipation versus average forward current

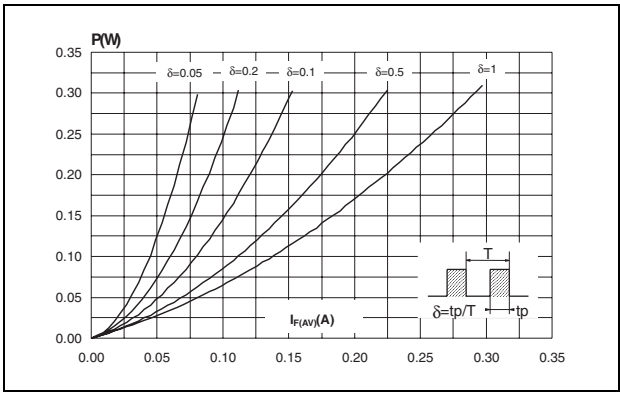

Figure 2. Average forward current versus ambient temperature (δ = 1)

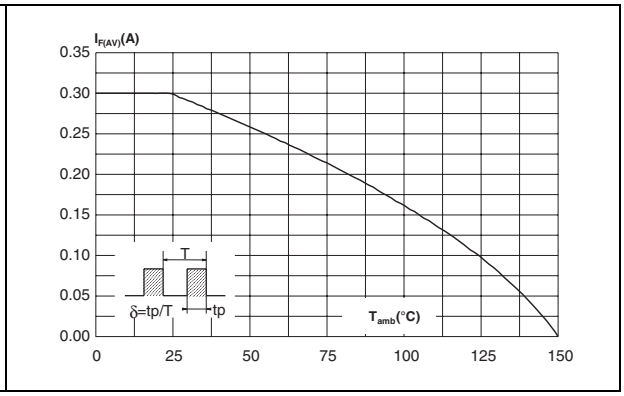

Figure 3. Reverse leakage current versus reverse applied voltage (typical values)

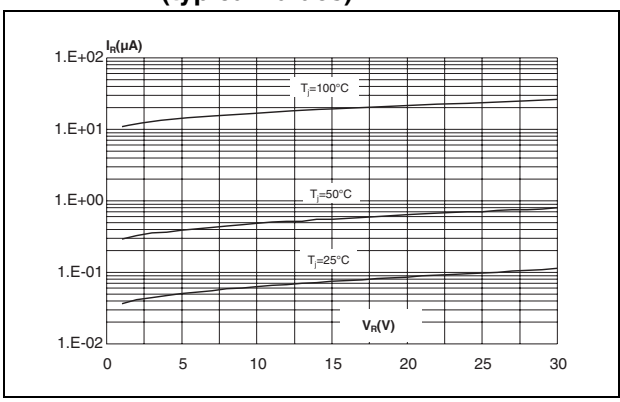

Figure 4. Reverse leakage current versus junction temperature

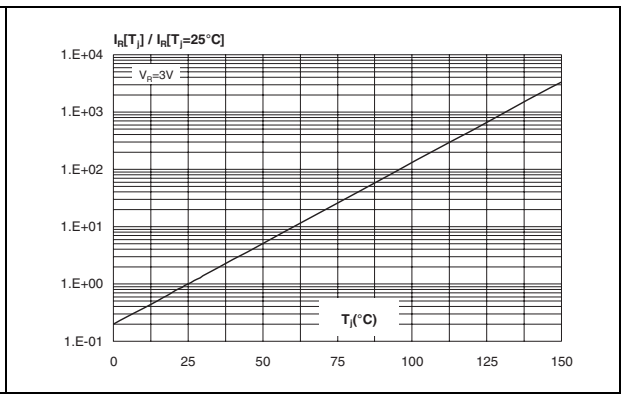

Figure 5. Junction capacitance versus reverse applied voltage (typical values)

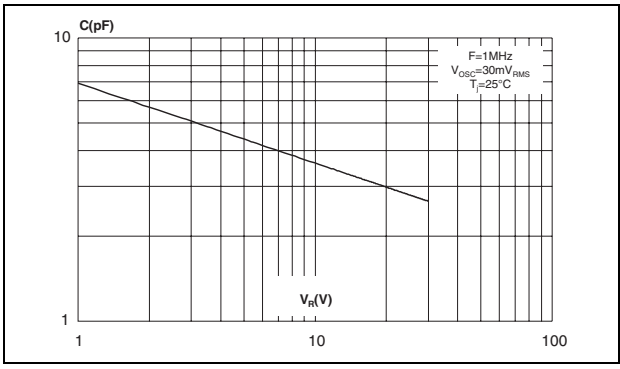

Figure 6. Forward voltage drop versus forward current (typical values)

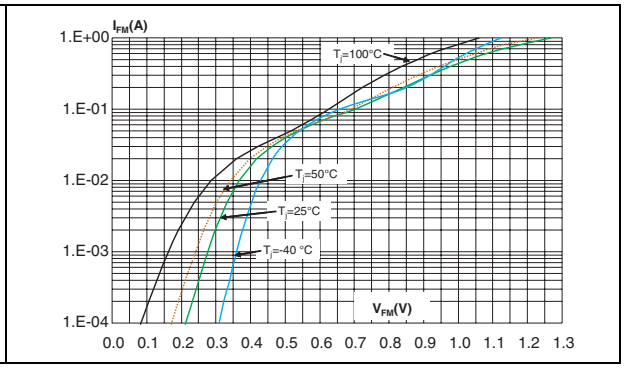

Figure 7. Thermal resistance junction to ambient versus copper surface under each lead (SOD-323)

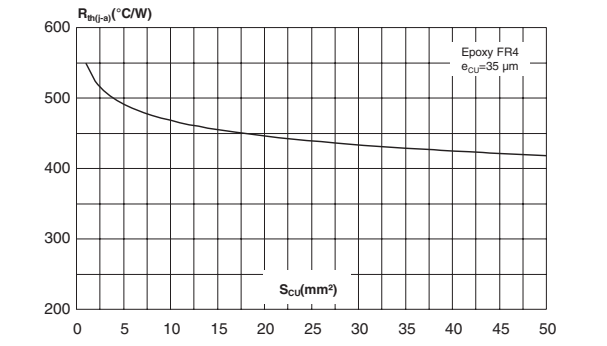

Figure 8. Relative variation of thermal impedance junction to ambient versus pulse duration (SOD-323)

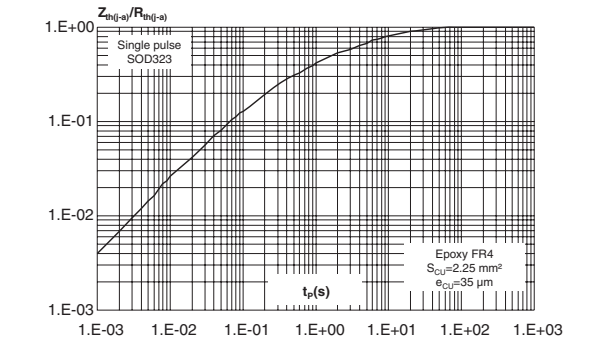

Figure 9. Relative variation of thermal impedance junction to ambient versus pulse duration (SOT-23)

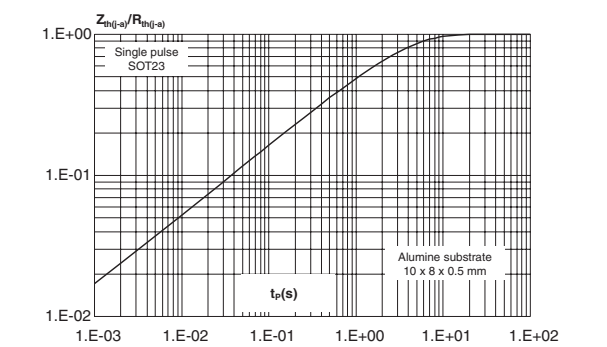

Figure 10. Relative variation of thermal impedance junction to ambient versus pulse duration (SOD-523)

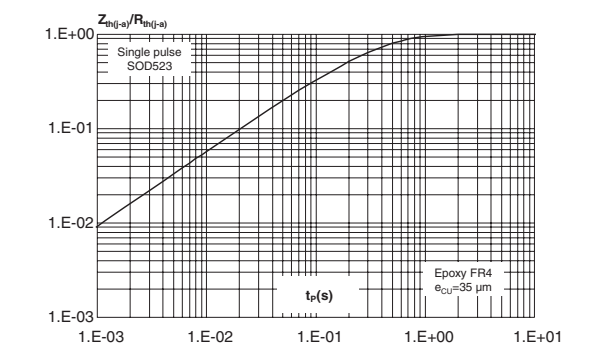

Figure 11. Relative variation of thermal impedance junction to ambient versus pulse duration

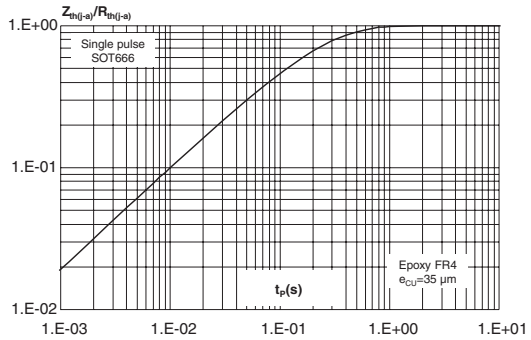

2 Ordering information scheme

Figure 12. Ordering information scheme

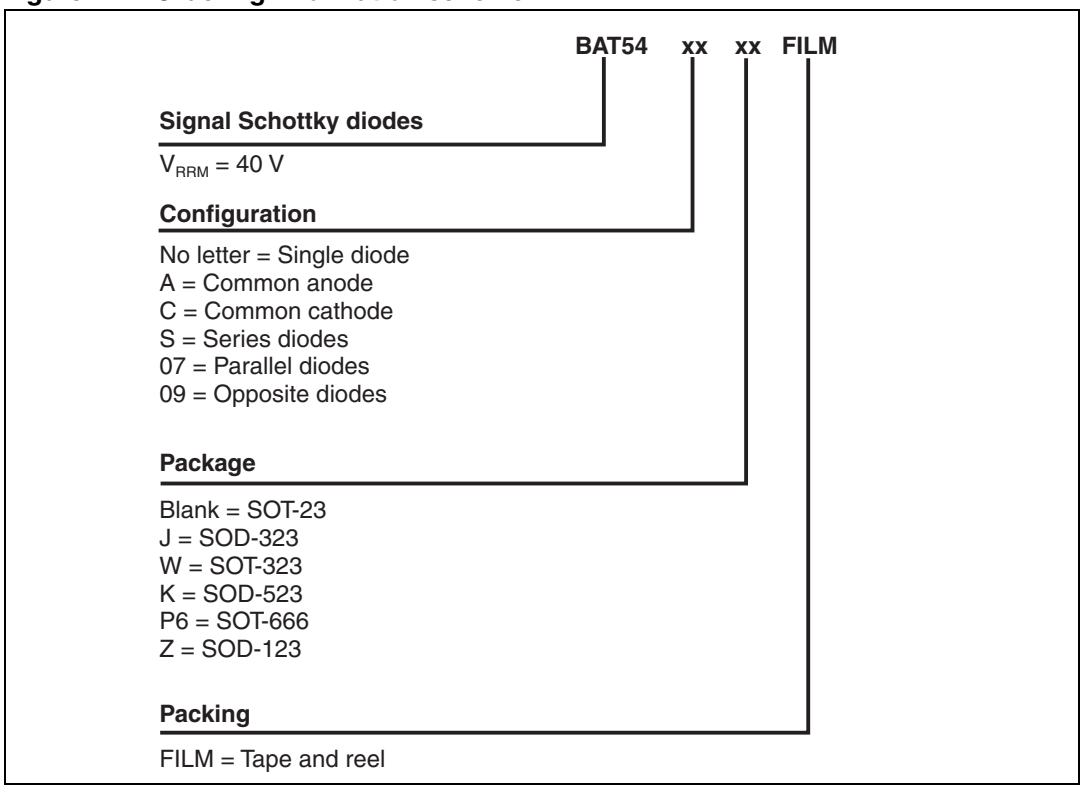

3 Package information

- Epoxy meets UL94, V0
- Lead-free packages

In order to meet environmental requirements, ST offers these devices in different grades of ECOPACK® packages, depending on their level of environmental compliance. ECOPACK® specifications, grade definitions and product status are available at: www.st.com. ECOPACK® is an ST trademark.

Table 6. SOD-123 dimensions

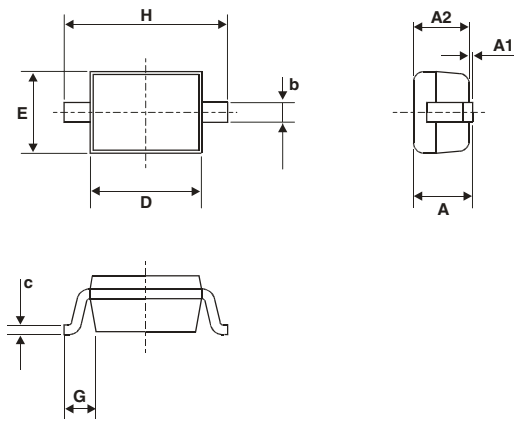

Ref.	Dimensions			
	Millimeters		Inches	
	Min.	Max.	Min.	Max.
A		1.45		0.057
A1	0	0.1	0	0.004
A2	0.85	1.35	0.033	0.053
b	0.55 Typ.		0.022 Typ.	
c	0.15 Typ.		0.039 Typ.	
D	2.55	2.85	0.1	0.112
E	1.4	1.7	0.055	0.067
G	0.25		0.01	
H	3.55	3.95	0.14	0.156

Figure 13. SOD-123 footprint (dimensions in mm)

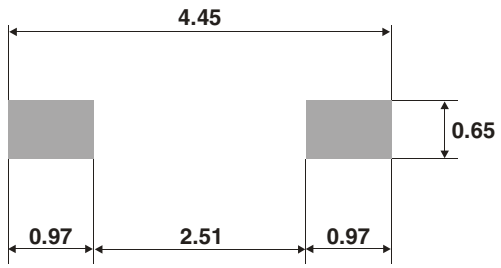

Table 7. SOD-323 dimensions

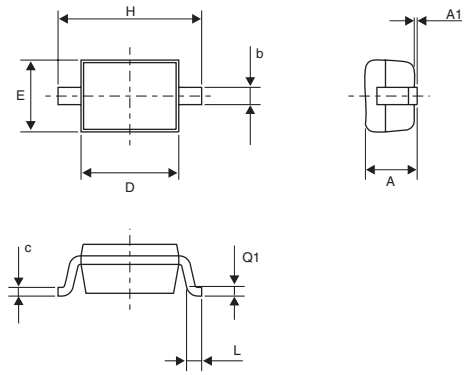

Ref.	Dimensions			
	Millimeters		Inches	
	Min.	Max.	Min.	Max.
A		1.17		0.046
A1	0	0.1	0	0.004
b	0.25	0.44	0.01	0.017
c	0.1	0.25	0.004	0.01
D	1.52	1.8	0.06	0.071
E	1.11	1.45	0.044	0.057
H	2.3	2.7	0.09	0.106
L	0.1	0.46	0.004	0.02
Q1	0.1	0.41	0.004	0.016

Figure 14. SOD-323 footprint (dimensions in mm)

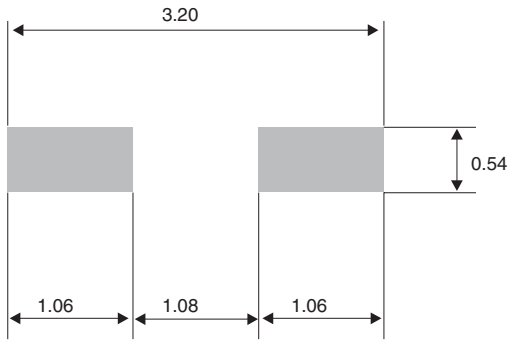

Table 8. SOD-523 dimensions

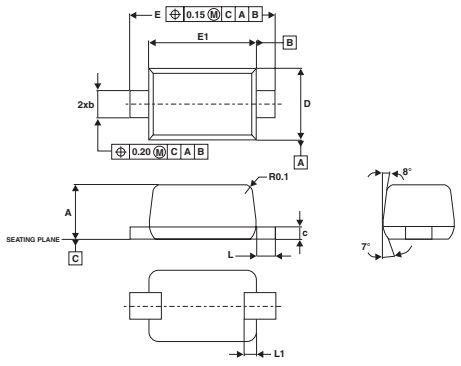

Ref.	Dimensions					
	Millimeters			Inches		
	Min.	Typ.	Max.	Min.	Typ.	Max.
A	0.50	0.60	0.70	0.020	0.024	0.028
E	1.50	1.60	1.70	0.059	0.063	0.067
E1	1.10	1.20	1.30	0.043	0.047	0.051
D	0.70	0.80	0.90	0.028	0.031	0.035
b	0.25		0.35	0.010		0.014
c	0.07		0.20	0.003		0.008
L	0.15	0.20	0.25	0.006	0.008	0.010
L1	0.05		0.20	0.002		0.008

Figure 15. SOD-523 footprint (dimensions in mm)

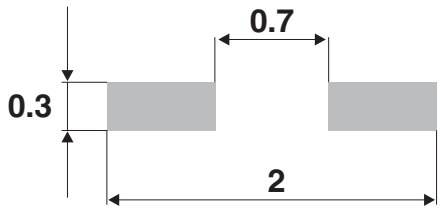

Table 9. SOT-23 dimensions

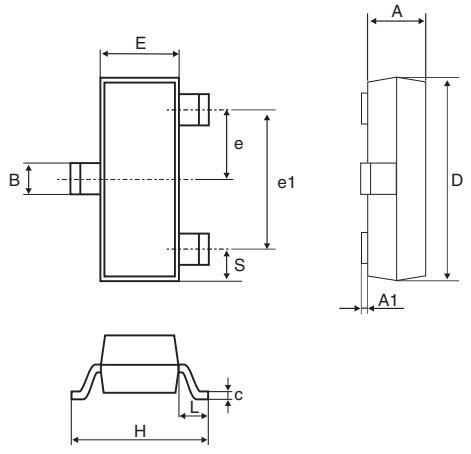

Ref.	Dimensions			
	Millimeters		Inches	
	Min.	Max.	Min.	Max.
A	0.89	1.4	0.035	0.055
A1	0	0.1	0	0.004
B	0.3	0.51	0.012	0.02
c	0.085	0.18	0.003	0.007
D	2.75	3.04	0.108	0.12
e	0.85	1.05	0.033	0.041
e1	1.7	2.1	0.067	0.083
E	1.2	1.6	0.047	0.063
H	2.1	2.75	0.083	0.108
L	0.6 typ.		0.024 typ.	
S	0.35	0.65	0.014	0.026

Figure 16. SOT-23 footprint (dimensions in mm)

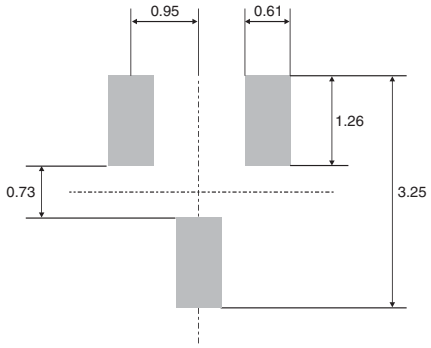

Table 10. SOT-323 dimensions

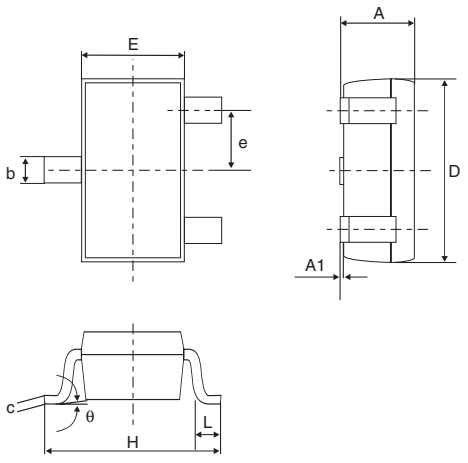

Ref.	Dimensions					
	Millimeters			Inches		
	Min.	Typ.	Max.	Min.	Typ.	Max.
A	0.8		1.1	0.031		0.043
A1	0.0		0.1	0.0		0.004
b	0.25		0.4	0.010		0.016
c	0.1		0.26	0.004		0.010
D	1.8	2.0	2.2	0.071	0.079	0.086
E	1.15	1.25	1.35	0.045	0.049	0.053
e		0.65			0.026	
H	1.8	2.1	2.4	0.071	0.083	0.094
L	0.1	0.2	0.3	0.004	0.008	0.012
q	0		30°	0		30°

Figure 17. SOT-323 footprint (dimensions in mm)

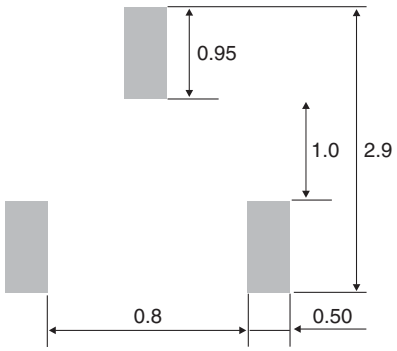

Table 11. SOT-666 dimensions

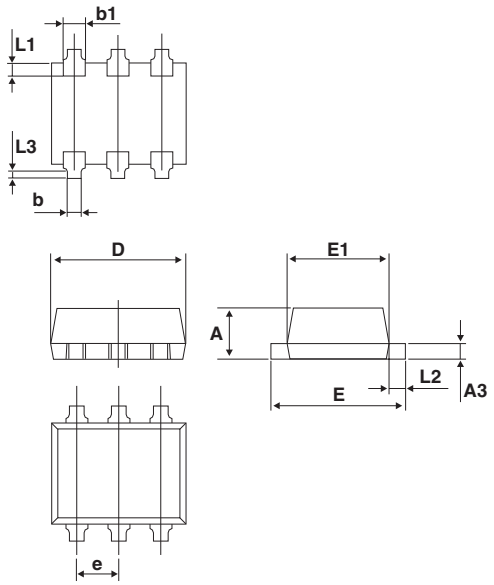

Ref.	Dimensions					
	Millimeters			Inches		
	Min.	Typ.	Max.	Min.	Typ.	Max.
A	0.45		0.60	0.018		0.024
A3	0.08		0.18	0.003		0.007
b	0.17		0.34	0.007		0.013
b1	0.19	0.27	0.34	0.007	0.011	0.013
D	1.50		1.70	0.059		0.067
E	1.50		1.70	0.059		0.067
E1	1.10		1.30	0.043		0.051
e		0.50			0.020	
L1		0.19			0.007	
L2	0.10		0.30	0.004		0.012
L3		0.10			0.004	

Figure 18. SOT-666 footprint (dimensions in mm)

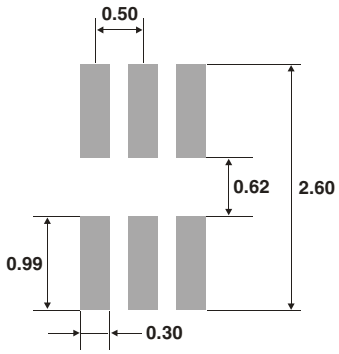

4 Ordering information

Table 12. Ordering information

Order code	Marking	Package	Weight	Base qty	Delivery mode
BAT54FILM	D86	SOT-23 Single	10 mg	3000	Tape and reel
BAT54SFILM	D88	SOT-23 Serial	10 mg	3000	Tape and reel
BAT54CFILM	D87	SOT-23 Common cathode	10 mg	3000	Tape and reel
BAT54AFILM	D84	SOT-23 Common anode	10 mg	3000	Tape and reel
BAT54WFILM	D73	SOT-323 Single	6 mg	3000	Tape and reel
BAT54SWFILM	D78	SOT-323 Serial	6 mg	3000	Tape and reel
BAT54CWFILM	D77	SOT-323 Common cathode	6 mg	3000	Tape and reel
BAT54AWFILM	D74	SOT-323 Common anode	6 mg	3000	Tape and reel
BAT54JFILM	86	SOD-323	5 mg	3000	Tape and reel
BAT54JFILM-H	86	SOD-323 ECOPACK®2 halogen-free	5 mg	3000	Tape and reel
BAT54KFILM	86	SOD-523	1.4 mg	3000	Tape and reel
BAT54-07P6FILM	P4	SOT-666 Parallel	2.9 mg	3000	Tape and reel
BAT54-09P6FILM	Q4	SOT-666 Opposite	2.9 mg	3000	Tape and reel
BAT54ZFILM	D72	SOD-123	10 mg	3000	Tape and reel

5 Revision history

Table 13. Document revision history

Date	Revision	Changes
Jun-1999	8	Last update.
24-Jul-2006	9	BAT54, A, C, S and BAT54J / W / AW / CW /SW datasheets merged. ECOPACK statement added. SOD-123, SOD-523 and SOT-666 packages added.
13-Oct-2009	10	Updated Table 8 quote “L1” from 0.10 to 0.05.

Please Read Carefully:

Information in this document is provided solely in connection with ST products. STMicroelectronics NV and its subsidiaries (“ST”) reserve the right to make changes, corrections, modifications or improvements, to this document, and the products and services described herein at any time, without notice.

All ST products are sold pursuant to ST’s terms and conditions of sale.

Purchasers are solely responsible for the choice, selection and use of the ST products and services described herein, and ST assumes no liability whatsoever relating to the choice, selection or use of the ST products and services described herein.

No license, express or implied, by estoppel or otherwise, to any intellectual property rights is granted under this document. If any part of this document refers to any third party products or services it shall not be deemed a license grant by ST for the use of such third party products or services, or any intellectual property contained therein or considered as a warranty covering the use in any manner whatsoever of such third party products or services or any intellectual property contained therein.

UNLESS OTHERWISE SET FORTH IN ST’S TERMS AND CONDITIONS OF SALE ST DISCLAIMS ANY EXPRESS OR IMPLIED WARRANTY WITH RESPECT TO THE USE AND/OR SALE OF ST PRODUCTS INCLUDING WITHOUT LIMITATION IMPLIED WARRANTIES OF MERCHANTABILITY, FITNESS FOR A PARTICULAR PURPOSE (AND THEIR EQUIVALENTS UNDER THE LAWS OF ANY JURISDICTION), OR INFRINGEMENT OF ANY PATENT, COPYRIGHT OR OTHER INTELLECTUAL PROPERTY RIGHT.

UNLESS EXPRESSLY APPROVED IN WRITING BY AN AUTHORIZED ST REPRESENTATIVE, ST PRODUCTS ARE NOT RECOMMENDED, AUTHORIZED OR WARRANTED FOR USE IN MILITARY, AIR CRAFT, SPACE, LIFE SAVING, OR LIFE SUSTAINING APPLICATIONS, NOR IN PRODUCTS OR SYSTEMS WHERE FAILURE OR MALFUNCTION MAY RESULT IN PERSONAL INJURY, DEATH, OR SEVERE PROPERTY OR ENVIRONMENTAL DAMAGE. ST PRODUCTS WHICH ARE NOT SPECIFIED AS "AUTOMOTIVE GRADE" MAY ONLY BE USED IN AUTOMOTIVE APPLICATIONS AT USER’S OWN RISK.

Resale of ST products with provisions different from the statements and/or technical features set forth in this document shall immediately void any warranty granted by ST for the ST product or service described herein and shall not create or extend in any manner whatsoever, any liability of ST.

ST and the ST logo are trademarks or registered trademarks of ST in various countries.

Information in this document supersedes and replaces all information previously supplied.

The ST logo is a registered trademark of STMicroelectronics. All other names are the property of their respective owners.

© 2009 STMicroelectronics - All rights reserved

STMicroelectronics group of companies

Australia - Belgium - Brazil - Canada - China - Czech Republic - Finland - France - Germany - Hong Kong - India - Israel - Italy - Japan - Malaysia - Malta - Morocco - Philippines - Singapore - Spain - Sweden - Switzerland - United Kingdom - United States of America

www.st.com

Общество с ограниченной ответственностью «МосЧип» ИНН 7719860671 / КПП 771901001
Адрес: 105318, г.Москва, ул.Щербаковская д.3, офис 1107

Данный компонент на территории Российской Федерации

Вы можете приобрести в компании MosChip.

Для оперативного оформления запроса Вам необходимо перейти по данной ссылке:

http://moschip.ru/get-element

Вы можете разместить у нас заказ для любого Вашего проекта, будь то серийное производство или разработка единичного прибора.

В нашем ассортименте представлены ведущие мировые производители активных и пассивных электронных компонентов.

Нашей специализацией является поставка электронной компонентной базы двойного назначения, продукции таких производителей как XILINX, Intel (ex.ALTERA), Vicor, Microchip, Texas Instruments, Analog Devices, Mini-Circuits, Amphenol, Glenair.

Сотрудничество с глобальными дистрибьюторами электронных компонентов, предоставляет возможность заказывать и получать с международных складов практически любой перечень компонентов в оптимальные для Вас сроки.

На всех этапах разработки и производства наши партнеры могут получить квалифицированную поддержку опытных инженеров.

Система менеджмента качества компании отвечает требованиям в соответствии с ГОСТ Р ИСО 9001, ГОСТ РВ 0015-002 и ЭС РД 009

Офис по работе с юридическими лицами:

105318, г.Москва, ул.Щербаковская д.3, офис 1107, 1118, ДЦ «Щербаковский»

Телефон: +7 495 668-12-70 (многоканальный)

Факс: +7 495 668-12-70 (доб.304)

E-mail: info@moschip.ru

Skype отдела продаж:
moschip.ru
moschip.ru_4
moschip.ru_6
moschip.ru_9