CD54/74AC240/241/244
CD54/74ACT240/241/244

Advance Information

TEXAS INSTRUMENTS

Data sheet acquired from Harris Semiconductor
SCHS287B – Revised January 2004

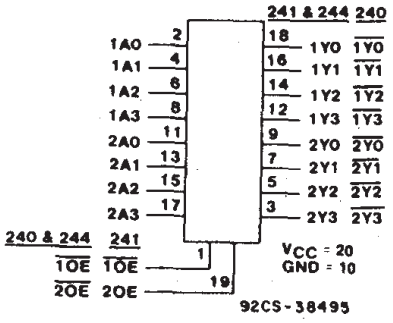

FUNCTIONAL DIAGRAM & TERMINAL ASSIGNMENT

Octal Buffer/Line Drivers, 3-State

CD54/74AC/ACT240 - Inverting
CD54/74AC/ACT241 - Non-Inverting
CD54/74AC/ACT244 - Non-Inverting

Type Features:

- *Buffered inputs*
- *Typical propagation delay:*
  3.6 ns @ V_{CC} = 5 V, T_A = 25°C, C_L = 50 pF

The RCA CD54/74AC240, CD54/74AC241, and CD54/74AC244 and the CD54/74ACT240, CD54/74ACT241, and CD54/74ACT244 3-state octal buffer/line drivers use the RCA ADVANCED CMOS technology. The CD54/74AC/ACT240 and CD54/74AC/ACT244 have active-LOW output enables ($\overline{1OE}$, $\overline{2OE}$). The CD54/74AC/ACT241 has one active-LOW ($\overline{1OE}$) and one active-HIGH (2OE) output enable.

The CD74AC240 and CD74ACT240 are supplied in 20-lead dual-in-line plastic packages (E suffix) and 20-lead small-outline packages (M and M96 suffixes). The CD74AC241 is supplied in 20-lead dual-in-line plastic packages (E suffix) and the CD74ACT241 is supplied in 20-lead dual-in-line plastic packages (E suffix) and 20-lead small-outline packages (M96 suffix). The CD74AC244 and CD74ACT244 are supplied in 20-lead dual-in-line plastic packages (E suffix), 20-lead small-outline packages (M and M96 suffixes), and 20-lead shrink small-outline packages (SM96 suffix). These package types are operable over the following temperature ranges: Commerical (0 to 70°C); Industrial (−40 to +85°C); and Extended Industrial/Military (−55 to + 125°C).

The CD54AC240 and CD54AC244 and the CD54ACT240, CD54ACT241, and CD54ACT244 are supplied in 20-lead hermetic dual-in-line ceramic packages (F3A suffix) and are operable over the −55 to +125°C temperature range.

Family Features:

- *Exceeds 2-kV ESD Protection - MIL-STD-883, Method 3015*
- *SCR-Latch-up-resistant CMOS process and circuit design*
- *Speed of bipolar FAST*/AS/S with significantly reduced power consumption*
- *Balanced propagation delays*
- *AC types feature 1.5-V to 5.5-V operation and balanced noise immunity at 30% of the supply*
- *± 24-mA output drive current*
  - *Fanout to 15 FAST* ICs*
  - *Drives 50-ohm transmission lines*

**FAST is a Registered Trademark of Fairchild Semiconductor Corp.*

TRUTH TABLES

INPUTS		OUTPUT
$\overline{10E}$, $\overline{20E}$	A	Y
L	L	H
L	H	L
H	X	Z

(AC/ACT240)

INPUTS		OUTPUT
$\overline{10E}$, $\overline{20E}$	A	Y
L	L	L
L	H	H
H	X	Z

(AC/ACT244)

INPUTS		OUTPUT	INPUTS		OUTPUT
$\overline{10E}$	1A	1Y	20E	2A	2Y
L	L	L	L	X	Z
L	H	H	H	L	L
H	X	Z	H	H	H

(AC/ACT241)

H = HIGH Voltage Level
L = LOW Voltage Level
X = Immaterial
Z = HIGH Impedance

This data sheet is applicable to the CD54/74AC240, CD54ACT240, and CD54/74ACT241. The CD54/74AC241 were not acquired from Harris Semiconductor. See SCHS244 for information on the CD74ACT240, CD74AC244, and CD74ACT244.

Copyright © 2004, Texas Instruments Incorporated

CD54/74AC240/241/244
CD54/74ACT240/241/244

MAXIMUM RATINGS, *Absolute-Maximum Values:*

DC SUPPLY-VOLTAGE (V_{CC}) ..... -0.5 to 6 V
DC INPUT DIODE CURRENT, I_{IK} (for $V_I < -0.5$ V or $V_I > V_{CC} + 0.5$ V) ..... ±20 mA
DC OUTPUT DIODE CURRENT, I_{OK} (for $V_O < -0.5$ V or $V_O > V_{CC} + 0.5$ V) ..... ±50 mA
DC OUTPUT SOURCE OR SINK CURRENT per Output Pin, I_O (for $V_O > -0.5$ V or $V_O < V_{CC} + 0.5$ V) ..... ±50 mA
DC V_{CC} or GROUND CURRENT (I_{CC} or I_{GND}) ..... ±100 mA*
POWER DISSIPATION PER PACKAGE (P_D):
For T_A = -40 to +85°C (Package Type E) ..... 500 mW
For T_A = -40 to +70°C (Package Type M) ..... 400 mW
For T_A = +70 to +85°C (Package Type M) ..... Derate Linearly at 6 mW/°C to 310 mW
OPERATING-TEMPERATURE RANGE (T_A): CD54 ..... -55 to +125°C
CD74 ..... -40 to +85°C
STORAGE TEMPERATURE (T_{stg}) ..... -65 to +150°C
LEAD TEMPERATURE (DURING SOLDERING):
At distance 1/16 ± 1/32 in. (1.59 ± 0.79 mm) from case for 10 s maximum. ..... +265°C
Unit inserted into PC board min. thickness 1/16 in. (1.59 mm) with solder contacting lead tips only. ..... +300°C

* For up to 4 outputs per device: add ± 25 mA for each additional output.

RECOMMENDED OPERATING CONDITIONS:
For maximum reliability, normal operating conditions should be selected so that operation is always within the following ranges:

CHARACTERISTIC		LIMITS MIN.	LIMITS MAX.	UNITS
Supply-Voltage Range, V_{CC}*: (For T_A = Full Package-Temperature Range)				
AC Types		1.5	5.5	V
ACT Types		4.5	5.5	V
DC Input or Output Voltage, V_I, V_O		0	V_{CC}	V
Operating Temperature, T_A	CD54	-55	+125	°C
	CD74	-40	+85	
Input Rise and Fall Slew Rate, dt/dv				
at 1.5 V to 3 V (AC Types)		0	50	ns/V
at 3.6 v to 5.5 V (AC Types)		0	20	ns/V
at 4.5 V to 5.5 V (ACT Types)		0	10	ns/V

* Unless otherwise specified, all voltages are referenced to ground.

9

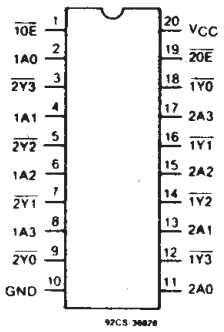

CD54/74AC, ACT240 TYPES
TERMINAL ASSIGNMENT

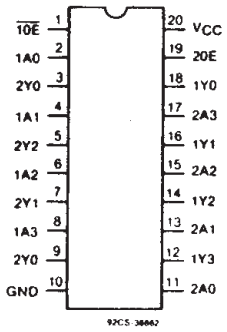

CD54/74AC, ACT241 TYPES
TERMINAL ASSIGNMENT

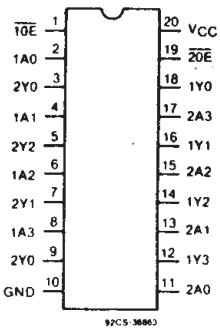

CD54/74AC, ACT244 TYPES
TERMINAL ASSIGNMENT

CD54/74AC240/241/244
CD54/74ACT240/241/244

STATIC ELECTRICAL CHARACTERISTICS: AC Series

CHARACTERISTICS	TEST CONDITIONS		V_{CC} (V)	AMBIENT TEMPERATURE (T_A) - °C						UNITS
				+25		-40 to +85		-55 to +125		
	V_I (V)	I_O (mA)		MIN.	MAX.	MIN.	MAX.	MIN.	MAX.	
High-Level Input Voltage V_{IH}			1.5	1.2	—	1.2	—	1.2	—	V
			3	2.1	—	2.1	—	2.1	—	
			5.5	3.85	—	3.85	—	3.85	—	
Low-Level Input Voltage V_{IL}			1.5	—	0.3	—	0.3	—	0.3	V
			3	—	0.9	—	0.9	—	0.9	
			5.5	—	1.65	—	1.65	—	1.65	
High-Level Output Voltage V_{OH}	V_{IH} or V_{IL}	-0.05	1.5	1.4	—	1.4	—	1.4	—	V
		-0.05	3	2.9	—	2.9	—	2.9	—	
		-0.05	4.5	4.4	—	4.4	—	4.4	—	
		-4	3	2.58	—	2.48	—	2.4	—	
		-24	4.5	3.94	—	3.8	—	3.7	—	
	#, *	-75	5.5	—	—	3.85	—	—	—	
		-50	5.5	—	—	—	—	3.85	—	
Low-Level Output Voltage V_{OL}	V_{IH} or V_{IL}	0.05	1.5	—	0.1	—	0.1	—	0.1	V
		0.05	3	—	0.1	—	0.1	—	0.1	
		0.05	4.5	—	0.1	—	0.1	—	0.1	
		12	3	—	0.36	—	0.44	—	0.5	
		24	4.5	—	0.36	—	0.44	—	0.5	
	#, *	75	5.5	—	—	—	1.65	—	—	
		50	5.5	—	—	—	—	—	1.65	
Input Leakage Current I_I	V_{CC} or GND		5.5	—	±0.1	—	±1	—	±1	μA
3-State Leakage Current I_{OZ}	V_{IH} or V_{IL} V_O = V_{CC} or GND		5.5	—	±0.5	—	±5	—	±10	μA
Quiescent Supply Current, MSI I_{CC}	V_{CC} or GND	0	5.5	—	8	—	80	—	160	μA

#Test one output at a time for a 1-second maximum duration. Measurement is made by forcing current and measuring voltage to minimize power dissipation.

*Test verifies a minimum 50-ohm transmission-line-drive capability at +85°C, 75 ohms at +125°C.

CD54/74AC240/241/244
CD54/74ACT240/241/244

STATIC ELECTRICAL CHARACTERISTICS: ACT Series

CHARACTERISTICS		TEST CONDITIONS V_I (V)	TEST CONDITIONS I_O (mA)	V_{CC} (V)	AMBIENT TEMPERATURE (T_A) - °C +25 MIN.	+25 MAX.	-40 to +85 MIN.	-40 to +85 MAX.	-55 to +125 MIN.	-55 to +125 MAX.	UNITS
High-Level Input Voltage	V_{IH}			4.5 to 5.5	2	—	2	—	2	—	V
Low-Level Input Voltage	V_{IL}			4.5 to 5.5	—	0.8	—	0.8	—	0.8	V
High-Level Output Voltage	V_{OH}	V_{IH} or V_{IL}	-0.05	4.5	4.4	—	4.4	—	4.4	—	V
		#, *	-24	4.5	3.94	—	3.8	—	3.7	—	V
			-75	5.5	—	—	3.85	—	—	—	V
			-50	5.5	—	—	—	—	3.85	—	V
Low-Level Output Voltage	V_{OL}	V_{IH} or V_{IL}	0.05	4.5	—	0.1	—	0.1	—	0.1	V
		#, *	24	4.5	—	0.36	—	0.44	—	0.5	V
			75	5.5	—	—	—	1.65	—	—	V
			50	5.5	—	—	—	—	—	1.65	V
Input Leakage Current	I_I	V_{CC} or GND		5.5	—	±0.1	—	±1	—	±1	μA
3-State Leakage Current	I_{OZ}	V_{IH} or V_{IL} V_O = V_{CC} or GND		5.5	—	±0.5	—	±5	—	±10	μA
Quiescent Supply Current, MSI	I_{CC}	V_{CC} or GND	0	5.5	—	8	—	80	—	160	μA
Additional Quiescent Supply Current per Input Pin TTL Inputs High 1 Unit Load	ΔI_{CC}	V_{CC}-2.1		4.5 to 5.5	—	2.4	—	2.8	—	3	mA

#Test one output at a time for a 1-second maximum duration. Measurement is made by forcing current and measuring voltage to minimize power dissipation.

*Test verifies a minimum 50-ohm transmission-line-drive capability at +85°C, 75 ohms at +125°C.

ACT INPUT LOADING TABLES

CD54/74ACT240	
INPUT	UNIT LOADS*
nA0 - A3	1.42
$\overline{10E}$	0.83
$\overline{20E}$	0.83

CD54/74ACT241	
INPUT	UNIT LOADS*
nA0 - A3	0.5
$\overline{10E}$	0.83
20E	1.67

CD54/74ACT244	
INPUT	UNIT LOADS*
nA0 - A3	0.5
$\overline{10E}$	0.83
$\overline{20E}$	0.83

*Unit load is ΔI_{CC} limit specified in Static Characteristics Chart, e.g., 2.4 mA max. @ 25°C.

9

CD54/74AC240/241/244
CD54/74ACT240/241/244

SWITCHING CHARACTERISTICS: AC Series; t_r, t_f = 3 ns, C_L = 50 pF

CHARACTERISTICS	SYMBOL	V_{CC} (V)	AMBIENT TEMPERATURE (T_A) - °C				UNITS
			-40 to +85		-55 to +125		
			MIN.	MAX.	MIN.	MAX.	
Propagation Delays: Data to Outputs AC240	t_{PLH} t_{PHL}	1.5	—	82	—	90	ns
		3.3*	2.6	9.2	2.5	10.1	
		5†	1.9	6.5	1.8	7.2	
AC241, 244	t_{PLH} t_{PHL}	1.5	—	93	—	103	ns
		3.3	3	10.5	2.9	11.5	
		5	2.2	7.5	2.1	8.2	
Output Enable Times	t_{PZL} t_{PZH}	1.5	—	136	—	150	ns
		3.3	4.6	16.4	4.5	18	
		5	3.1	10.9	3	12	
Output Disable Times	t_{PLZ} t_{PHZ}	1.5	—	136	—	150	ns
		3.3	3.9	13.6	3.8	15	
		5	3.1	10.9	3	12	
Power Dissipation Capacitance AC240	C_{PD}§	—	65 Typ.		65 Typ.		pF
AC241, 244		—	71 Typ.		71 Typ.		
Min. (Valley) V_{OH} During Switching of Other Outputs (Output Under Test Not Switching)	V_{OHV} See Fig. 1	5	4 Typ. @ 25°C				V
Max. (Peak) V_{OL} During Switching of Other Outputs (Output Under Test Not Switching)	V_{OLP} See Fig. 1	5	1 Typ. @ 25°C				V
Input Capacitance	C_I	—	—	10	—	10	pF
3-State Output Capacitance	C_O	—	—	15	—	15	pF

SWITCHING CHARACTERISTICS: ACT Series; t_r, t_f = 3 ns, C_L = 50 pF

CHARACTERISTICS	SYMBOL	V_{CC} (V)	AMBIENT TEMPERATURE (T_A) - °C				UNITS
			-40 to +85		-55 to +125		
			MIN.	MAX.	MIN.	MAX.	
Propagation Delays: Data to Outputs ACT240	t_{PLH} t_{PHL}	5†	2.3	7.8	2.2	8.6	ns
ACT241, 244	t_{PLH} t_{PHL}	5	2.5	8.7	2.4	9.6	ns
Output Enable Times	t_{PZL} t_{PZH}	5	3.5	12.2	3.4	13.4	ns
Output Disable Times	t_{PLZ} t_{PHZ}	5	3.5	12.2	3.4	13.4	ns
Power Dissipation Capacitance ACT240	C_{PD}§	—	65 Typ.		65 Typ.		pF
ACT241, 244		—	71 Typ.		71 Typ.		
Min. (Valley) V_{OH} During Switching of Other Outputs (Output Under Test Not Switching)	V_{OHV} See Fig. 1	5	4 Typ. @ 25°C				V
Max. (Peak) V_{OL} During Switching of Other Outputs (Output Under Test Not Switching)	V_{OLP} See Fig. 1	5	1 Typ. @ 25°C				V
Input Capacitance	C_I	—	—	10	—	10	pF
3-State Output Capacitance	C_O	—	—	15	—	15	pF

*3.3 V: min. is @ 3.6 V
max. is @ 3 V

†5 V: min. is @ 5.5 V
max. is @ 4.5 V

‡C_{PD} is used to determine the dynamic power consumption, per package.
For AC series: $P_D = V_{CC}^2 f_i (C_{PD} + C_L)$
For ACT series: $P_D = V_{CC}^2 f_i (C_{PD} + C_L) + V_{CC} \Delta I_{CC}$ where f_i = input frequency
C_L = output load capacitance
V_{CC} = supply voltage

PARAMETER MEASUREMENT INFORMATION

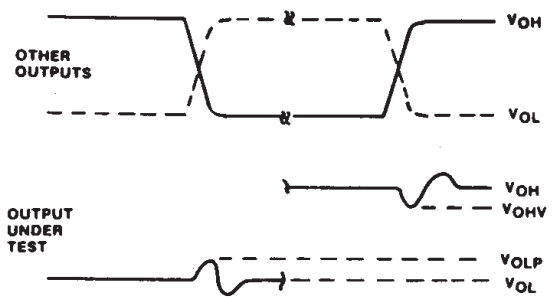

NOTES:
1. V_{OHV} AND V_{OLP} ARE MEASURED WITH RESPECT TO A GROUND REFERENCE NEAR THE OUTPUT UNDER TEST.
2. INPUT PULSES HAVE THE FOLLOWING CHARACTERISTICS: PRR ≤ 1 MHz, t_r = 3 ns, t_f = 3 ns, SKEW 1 ns.
3. R.F. FIXTURE WITH 700-MHz DESIGN RULES REQUIRED. IC SHOULD BE SOLDERED INTO TEST BOARD AND BYPASSED WITH 0.1 μF CAPACITOR. SCOPE AND PROBES REQUIRE 700-MHz BANDWIDTH.

92CS-42406

Fig. 1 - Simultaneous switching transient waveforms.

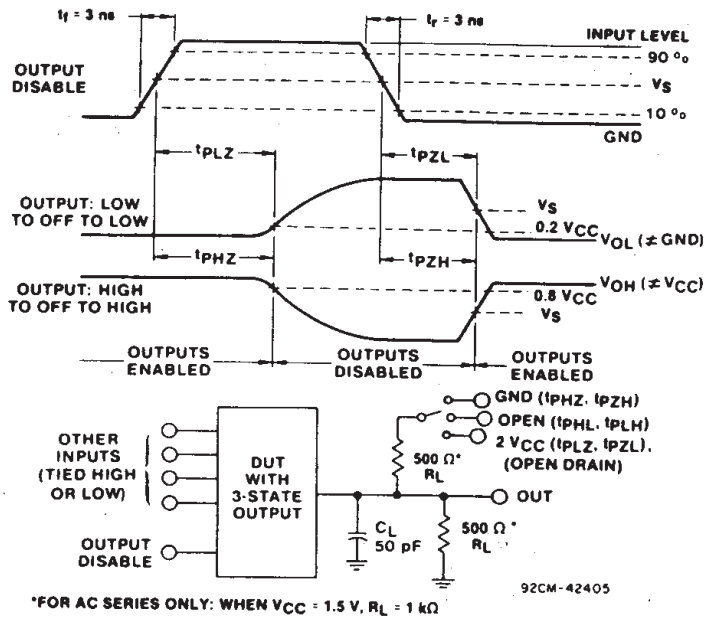

*FOR AC SERIES ONLY: WHEN V_{CC} = 1.5 V, R_L = 1 kΩ

Fig. 2 - Three-state propagation delay times and test circuit.

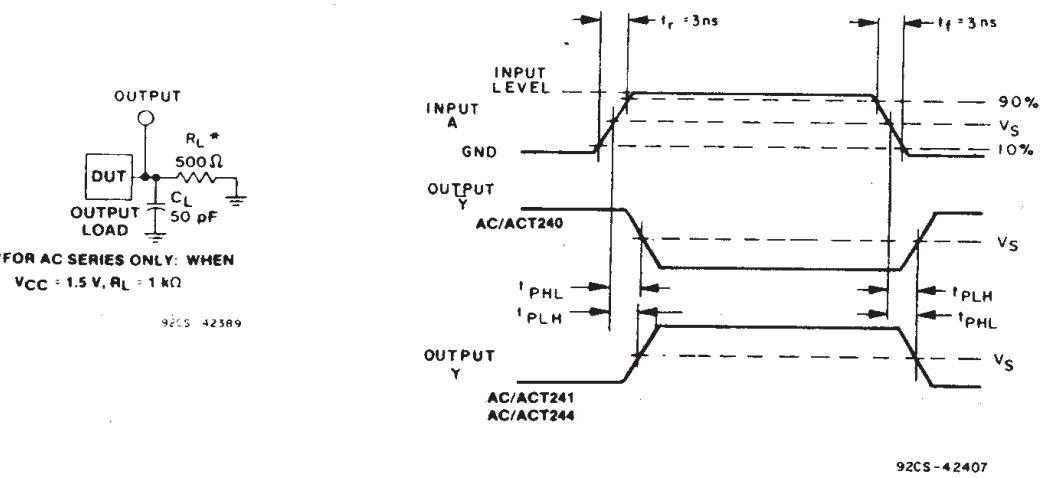

*FOR AC SERIES ONLY: WHEN V_{CC} = 1.5 V, R_L = 1 kΩ

92CS-42389

Fig. 3 - Propagation delay times and test circuit.

	CD54/74AC	CD54/74ACT
Input Level	V_{CC}	3 V
Input Switching Voltage, V_S	0.5 V_{CC}	1.5 V
Output Switching Voltage, V_S	0.5 V_{CC}	0.5 V_{CC}

9

PACKAGING INFORMATION

Orderable Device	Status (1)	Package Type	Package Drawing	Pins	Package Qty	Eco Plan (2)	Lead/Ball Finish	MSL Peak Temp (3)
CD54AC240F3A	ACTIVE	CDIP	J	20	1	TBD	A42	N / A for Pkg Type
CD54AC244F3A	ACTIVE	CDIP	J	20	1	TBD	A42	N / A for Pkg Type
CD54ACT240F3A	ACTIVE	CDIP	J	20	1	TBD	A42	N / A for Pkg Type
CD54ACT241F3A	ACTIVE	CDIP	J	20	1	TBD	A42	N / A for Pkg Type
CD54ACT244F3A	ACTIVE	CDIP	J	20	1	TBD	A42	N / A for Pkg Type
CD74AC240E	ACTIVE	PDIP	N	20	20	Pb-Free (RoHS)	CU NIPDAU	N / A for Pkg Type
CD74AC240EE4	ACTIVE	PDIP	N	20	20	Pb-Free (RoHS)	CU NIPDAU	N / A for Pkg Type
CD74AC240M	ACTIVE	SOIC	DW	20	25	Green (RoHS & no Sb/Br)	CU NIPDAU	Level-1-260C-UNLIM
CD74AC240M96	ACTIVE	SOIC	DW	20	2000	Green (RoHS & no Sb/Br)	CU NIPDAU	Level-1-260C-UNLIM
CD74AC240M96E4	ACTIVE	SOIC	DW	20	2000	Green (RoHS & no Sb/Br)	CU NIPDAU	Level-1-260C-UNLIM
CD74AC240M96G4	ACTIVE	SOIC	DW	20	2000	Green (RoHS & no Sb/Br)	CU NIPDAU	Level-1-260C-UNLIM
CD74AC240ME4	ACTIVE	SOIC	DW	20	25	Green (RoHS & no Sb/Br)	CU NIPDAU	Level-1-260C-UNLIM
CD74AC240MG4	ACTIVE	SOIC	DW	20	25	Green (RoHS & no Sb/Br)	CU NIPDAU	Level-1-260C-UNLIM
CD74AC244E	ACTIVE	PDIP	N	20	20	Pb-Free (RoHS)	CU NIPDAU	N / A for Pkg Type
CD74AC244EE4	ACTIVE	PDIP	N	20	20	Pb-Free (RoHS)	CU NIPDAU	N / A for Pkg Type
CD74AC244M	ACTIVE	SOIC	DW	20	25	Green (RoHS & no Sb/Br)	CU NIPDAU	Level-1-260C-UNLIM
CD74AC244M96	ACTIVE	SOIC	DW	20	2000	Green (RoHS & no Sb/Br)	CU NIPDAU	Level-1-260C-UNLIM
CD74AC244M96E4	ACTIVE	SOIC	DW	20	2000	Green (RoHS & no Sb/Br)	CU NIPDAU	Level-1-260C-UNLIM
CD74AC244M96G4	ACTIVE	SOIC	DW	20	2000	Green (RoHS & no Sb/Br)	CU NIPDAU	Level-1-260C-UNLIM
CD74AC244ME4	ACTIVE	SOIC	DW	20	25	Green (RoHS & no Sb/Br)	CU NIPDAU	Level-1-260C-UNLIM
CD74AC244MG4	ACTIVE	SOIC	DW	20	25	Green (RoHS & no Sb/Br)	CU NIPDAU	Level-1-260C-UNLIM
CD74AC244SM96	ACTIVE	SSOP	DB	20	2000	Green (RoHS & no Sb/Br)	CU NIPDAU	Level-1-260C-UNLIM
CD74AC244SM96E4	ACTIVE	SSOP	DB	20	2000	Green (RoHS & no Sb/Br)	CU NIPDAU	Level-1-260C-UNLIM
CD74AC244SM96G4	ACTIVE	SSOP	DB	20	2000	Green (RoHS & no Sb/Br)	CU NIPDAU	Level-1-260C-UNLIM
CD74ACT240E	ACTIVE	PDIP	N	20	20	Pb-Free (RoHS)	CU NIPDAU	N / A for Pkg Type
CD74ACT240EE4	ACTIVE	PDIP	N	20	20	Pb-Free (RoHS)	CU NIPDAU	N / A for Pkg Type
CD74ACT240M	ACTIVE	SOIC	DW	20	25	Green (RoHS & no Sb/Br)	CU NIPDAU	Level-1-260C-UNLIM

Orderable Device	Status [1]	Package Type	Package Drawing	Pins	Package Qty	Eco Plan [2]	Lead/Ball Finish	MSL Peak Temp [3]
CD74ACT240M96	ACTIVE	SOIC	DW	20	2000	Green (RoHS & no Sb/Br)	CU NIPDAU	Level-1-260C-UNLIM
CD74ACT240M96E4	ACTIVE	SOIC	DW	20	2000	Green (RoHS & no Sb/Br)	CU NIPDAU	Level-1-260C-UNLIM
CD74ACT240M96G4	ACTIVE	SOIC	DW	20	2000	Green (RoHS & no Sb/Br)	CU NIPDAU	Level-1-260C-UNLIM
CD74ACT240ME4	ACTIVE	SOIC	DW	20	25	Green (RoHS & no Sb/Br)	CU NIPDAU	Level-1-260C-UNLIM
CD74ACT240MG4	ACTIVE	SOIC	DW	20	25	Green (RoHS & no Sb/Br)	CU NIPDAU	Level-1-260C-UNLIM
CD74ACT241E	ACTIVE	PDIP	N	20	20	Pb-Free (RoHS)	CU NIPDAU	N / A for Pkg Type
CD74ACT241EE4	ACTIVE	PDIP	N	20	20	Pb-Free (RoHS)	CU NIPDAU	N / A for Pkg Type
CD74ACT241M96	ACTIVE	SOIC	DW	20	2000	Green (RoHS & no Sb/Br)	CU NIPDAU	Level-1-260C-UNLIM
CD74ACT241M96E4	ACTIVE	SOIC	DW	20	2000	Green (RoHS & no Sb/Br)	CU NIPDAU	Level-1-260C-UNLIM
CD74ACT241M96G4	ACTIVE	SOIC	DW	20	2000	Green (RoHS & no Sb/Br)	CU NIPDAU	Level-1-260C-UNLIM
CD74ACT244E	ACTIVE	PDIP	N	20	20	Pb-Free (RoHS)	CU NIPDAU	N / A for Pkg Type
CD74ACT244EE4	ACTIVE	PDIP	N	20	20	Pb-Free (RoHS)	CU NIPDAU	N / A for Pkg Type
CD74ACT244M	ACTIVE	SOIC	DW	20	25	Green (RoHS & no Sb/Br)	CU NIPDAU	Level-1-260C-UNLIM
CD74ACT244M96	ACTIVE	SOIC	DW	20	2000	Green (RoHS & no Sb/Br)	CU NIPDAU	Level-1-260C-UNLIM
CD74ACT244M96E4	ACTIVE	SOIC	DW	20	2000	Green (RoHS & no Sb/Br)	CU NIPDAU	Level-1-260C-UNLIM
CD74ACT244M96G4	ACTIVE	SOIC	DW	20	2000	Green (RoHS & no Sb/Br)	CU NIPDAU	Level-1-260C-UNLIM
CD74ACT244ME4	ACTIVE	SOIC	DW	20	25	Green (RoHS & no Sb/Br)	CU NIPDAU	Level-1-260C-UNLIM
CD74ACT244MG4	ACTIVE	SOIC	DW	20	25	Green (RoHS & no Sb/Br)	CU NIPDAU	Level-1-260C-UNLIM
CD74ACT244SM96	ACTIVE	SSOP	DB	20	2000	Green (RoHS & no Sb/Br)	CU NIPDAU	Level-1-260C-UNLIM
CD74ACT244SM96E4	ACTIVE	SSOP	DB	20	2000	Green (RoHS & no Sb/Br)	CU NIPDAU	Level-1-260C-UNLIM
CD74ACT244SM96G4	ACTIVE	SSOP	DB	20	2000	Green (RoHS & no Sb/Br)	CU NIPDAU	Level-1-260C-UNLIM

[1] The marketing status values are defined as follows:
ACTIVE: Product device recommended for new designs.
LIFEBUY: TI has announced that the device will be discontinued, and a lifetime-buy period is in effect.
NRND: Not recommended for new designs. Device is in production to support existing customers, but TI does not recommend using this part in a new design.
PREVIEW: Device has been announced but is not in production. Samples may or may not be available.
OBSOLETE: TI has discontinued the production of the device.

[2] Eco Plan - The planned eco-friendly classification: Pb-Free (RoHS), Pb-Free (RoHS Exempt), or Green (RoHS & no Sb/Br) - please check http://www.ti.com/productcontent for the latest availability information and additional product content details.

TBD: The Pb-Free/Green conversion plan has not been defined.
Pb-Free (RoHS): TI's terms "Lead-Free" or "Pb-Free" mean semiconductor products that are compatible with the current RoHS requirements for all 6 substances, including the requirement that lead not exceed 0.1% by weight in homogeneous materials. Where designed to be soldered at high temperatures, TI Pb-Free products are suitable for use in specified lead-free processes.
Pb-Free (RoHS Exempt): This component has a RoHS exemption for either 1) lead-based flip-chip solder bumps used between the die and package, or 2) lead-based die adhesive used between the die and leadframe. The component is otherwise considered Pb-Free (RoHS compatible) as defined above.
Green (RoHS & no Sb/Br): TI defines "Green" to mean Pb-Free (RoHS compatible), and free of Bromine (Br) and Antimony (Sb) based flame retardants (Br or Sb do not exceed 0.1% by weight in homogeneous material)

(3) MSL, Peak Temp. -- The Moisture Sensitivity Level rating according to the JEDEC industry standard classifications, and peak solder temperature.

Important Information and Disclaimer: The information provided on this page represents TI's knowledge and belief as of the date that it is provided. TI bases its knowledge and belief on information provided by third parties, and makes no representation or warranty as to the accuracy of such information. Efforts are underway to better integrate information from third parties. TI has taken and continues to take reasonable steps to provide representative and accurate information but may not have conducted destructive testing or chemical analysis on incoming materials and chemicals. TI and TI suppliers consider certain information to be proprietary, and thus CAS numbers and other limited information may not be available for release.

In no event shall TI's liability arising out of such information exceed the total purchase price of the TI part(s) at issue in this document sold by TI to Customer on an annual basis.

TAPE AND REEL INFORMATION

REEL DIMENSIONS

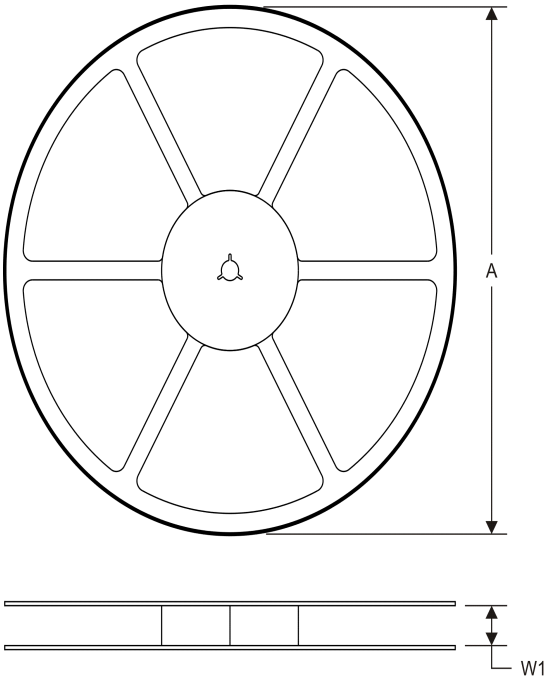

TAPE DIMENSIONS

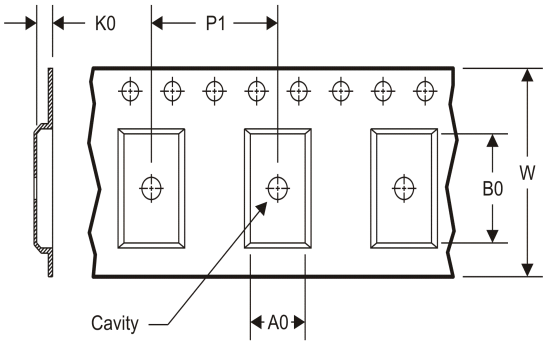

A0	Dimension designed to accommodate the component width
B0	Dimension designed to accommodate the component length
K0	Dimension designed to accommodate the component thickness
W	Overall width of the carrier tape
P1	Pitch between successive cavity centers

TAPE AND REEL INFORMATION

*All dimensions are nominal

Device	Package Type	Package Drawing	Pins	SPQ	Reel Diameter (mm)	Reel Width W1 (mm)	A0 (mm)	B0 (mm)	K0 (mm)	P1 (mm)	W (mm)	Pin1 Quadrant
CD74AC240M96	SOIC	DW	20	2000	330.0	24.4	10.8	13.0	2.7	12.0	24.0	Q1
CD74AC244M96	SOIC	DW	20	2000	330.0	24.4	10.8	13.0	2.7	12.0	24.0	Q1
CD74AC244SM96	SSOP	DB	20	2000	330.0	16.4	8.2	7.5	2.5	12.0	16.0	Q1
CD74ACT240M96	SOIC	DW	20	2000	330.0	24.4	10.8	13.0	2.7	12.0	24.0	Q1
CD74ACT241M96	SOIC	DW	20	2000	330.0	24.4	10.8	13.0	2.7	12.0	24.0	Q1
CD74ACT244M96	SOIC	DW	20	2000	330.0	24.4	10.8	13.0	2.7	12.0	24.0	Q1
CD74ACT244SM96	SSOP	DB	20	2000	330.0	16.4	8.2	7.5	2.5	12.0	16.0	Q1

TAPE AND REEL BOX DIMENSIONS

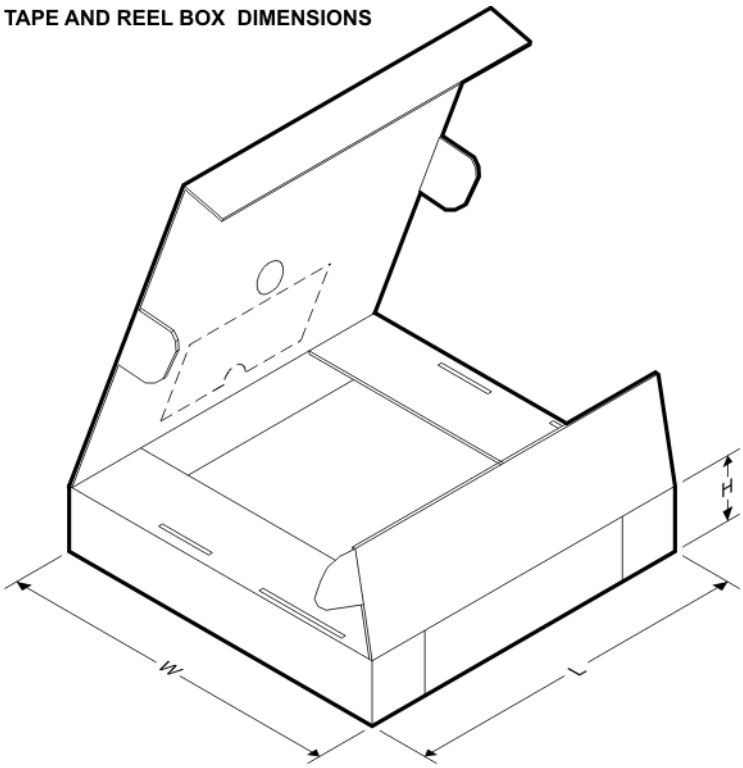

*All dimensions are nominal

Device	Package Type	Package Drawing	Pins	SPQ	Length (mm)	Width (mm)	Height (mm)
CD74AC240M96	SOIC	DW	20	2000	367.0	367.0	45.0
CD74AC244M96	SOIC	DW	20	2000	367.0	367.0	45.0
CD74AC244SM96	SSOP	DB	20	2000	367.0	367.0	38.0
CD74ACT240M96	SOIC	DW	20	2000	367.0	367.0	45.0
CD74ACT241M96	SOIC	DW	20	2000	367.0	367.0	45.0
CD74ACT244M96	SOIC	DW	20	2000	367.0	367.0	45.0
CD74ACT244SM96	SSOP	DB	20	2000	367.0	367.0	38.0

J (R–GDIP–T**) CERAMIC DUAL IN–LINE PACKAGE

14 LEADS SHOWN

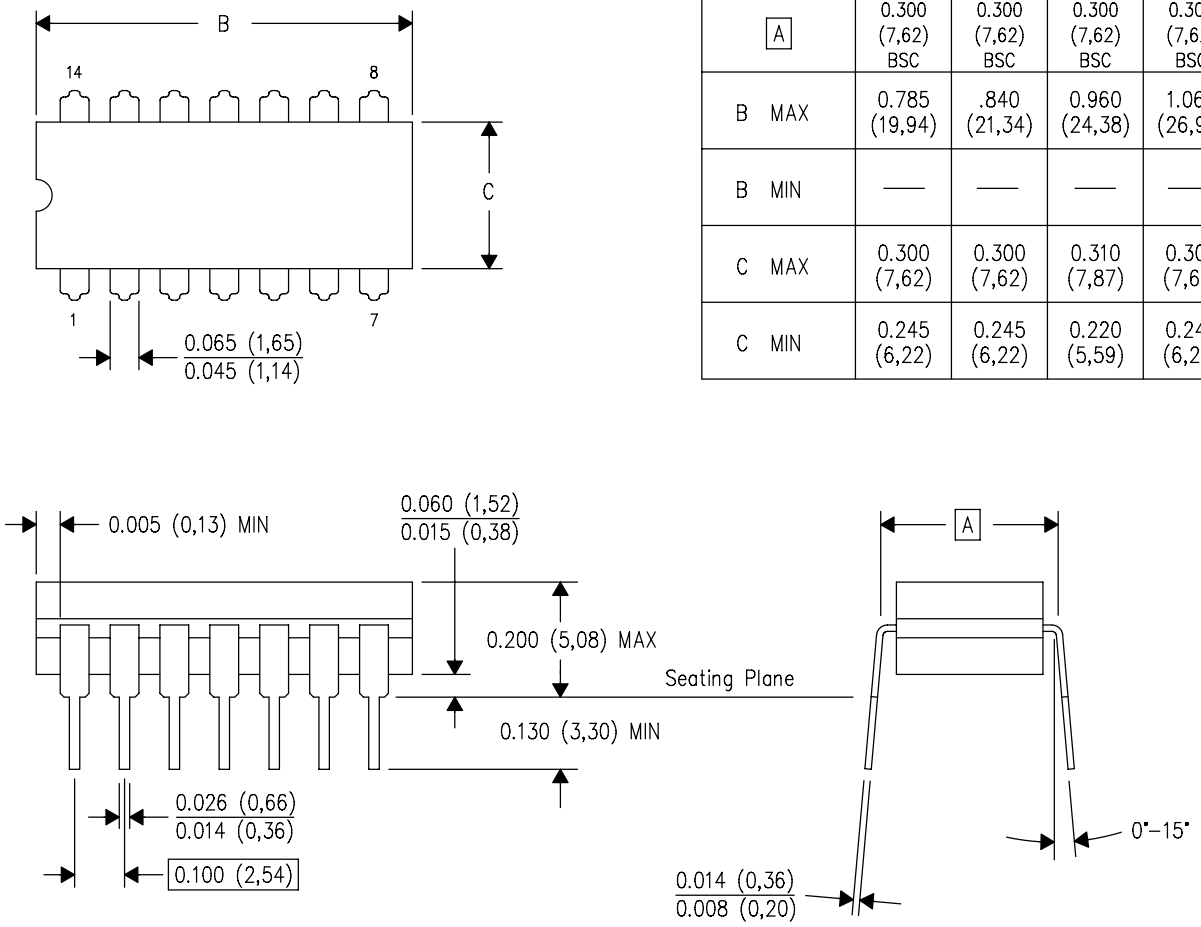

DIM \ PINS **	14	16	18	20
A	0.300 (7,62) BSC	0.300 (7,62) BSC	0.300 (7,62) BSC	0.300 (7,62) BSC
B MAX	0.785 (19,94)	.840 (21,34)	0.960 (24,38)	1.060 (26,92)
B MIN	—	—	—	—
C MAX	0.300 (7,62)	0.300 (7,62)	0.310 (7,87)	0.300 (7,62)
C MIN	0.245 (6,22)	0.245 (6,22)	0.220 (5,59)	0.245 (6,22)

4040083/F 03/03

NOTES:
- A. All linear dimensions are in inches (millimeters).
- B. This drawing is subject to change without notice.
- C. This package is hermetically sealed with a ceramic lid using glass frit.
- D. Index point is provided on cap for terminal identification only on press ceramic glass frit seal only.
- E. Falls within MIL STD 1835 GDIP1–T14, GDIP1–T16, GDIP1–T18 and GDIP1–T20.

N (R–PDIP–T**) PLASTIC DUAL–IN–LINE PACKAGE

16 PINS SHOWN

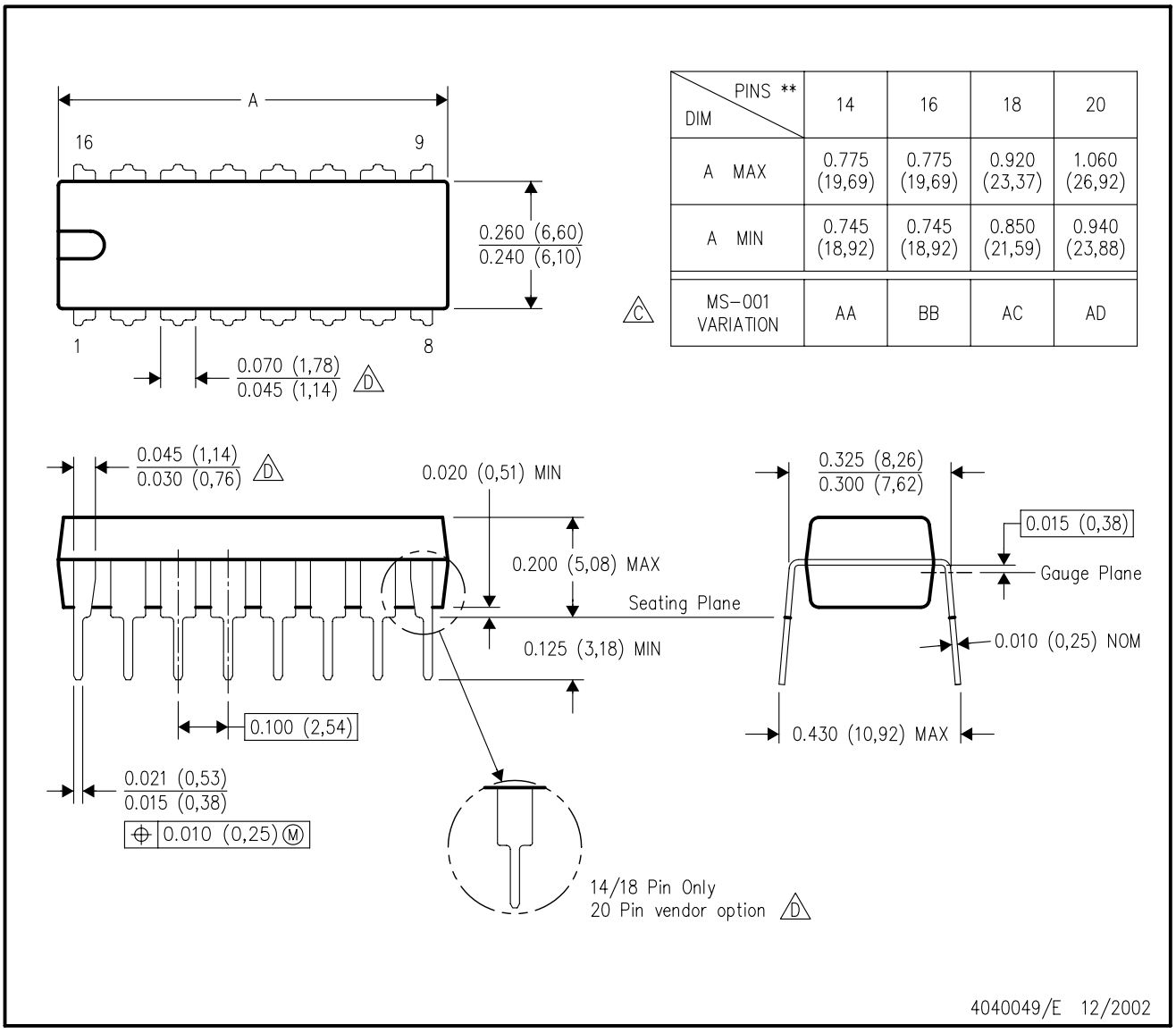

DIM \ PINS **	14	16	18	20
A MAX	0.775 (19,69)	0.775 (19,69)	0.920 (23,37)	1.060 (26,92)
A MIN	0.745 (18,92)	0.745 (18,92)	0.850 (21,59)	0.940 (23,88)
MS–001 VARIATION (C)	AA	BB	AC	AD

NOTES:
A. All linear dimensions are in inches (millimeters).
B. This drawing is subject to change without notice.
C. Falls within JEDEC MS–001, except 18 and 20 pin minimum body length (Dim A).
D. The 20 pin end lead shoulder width is a vendor option, either half or full width.

DW (R–PDSO–G20) PLASTIC SMALL OUTLINE

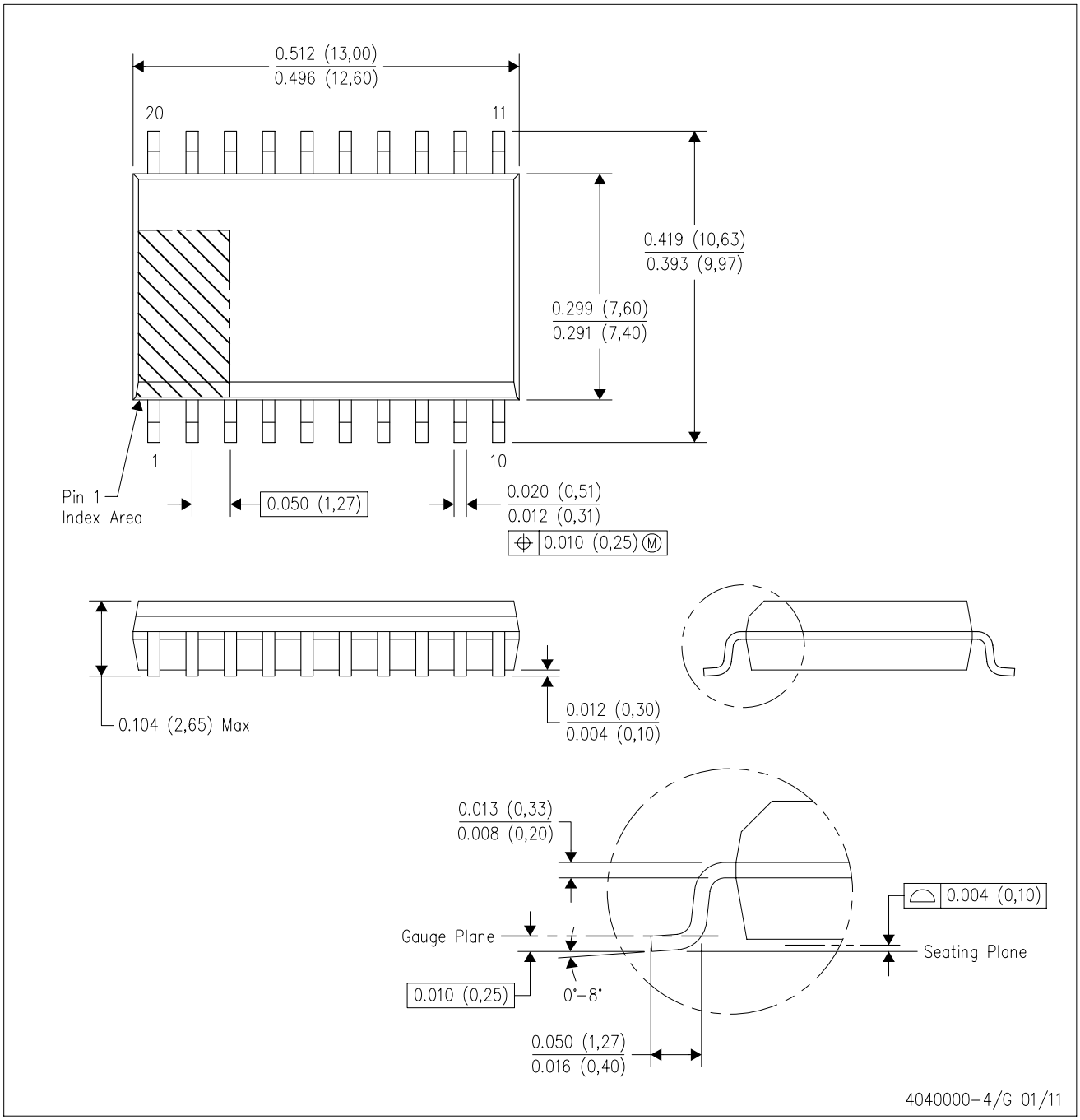

NOTES:
A. All linear dimensions are in inches (millimeters). Dimensioning and tolerancing per ASME Y14.5M–1994.
B. This drawing is subject to change without notice.
C. Body dimensions do not include mold flash or protrusion not to exceed 0.006 (0,15).
D. Falls within JEDEC MS–013 variation AC.

DW (R–PDSO–G20) PLASTIC SMALL OUTLINE

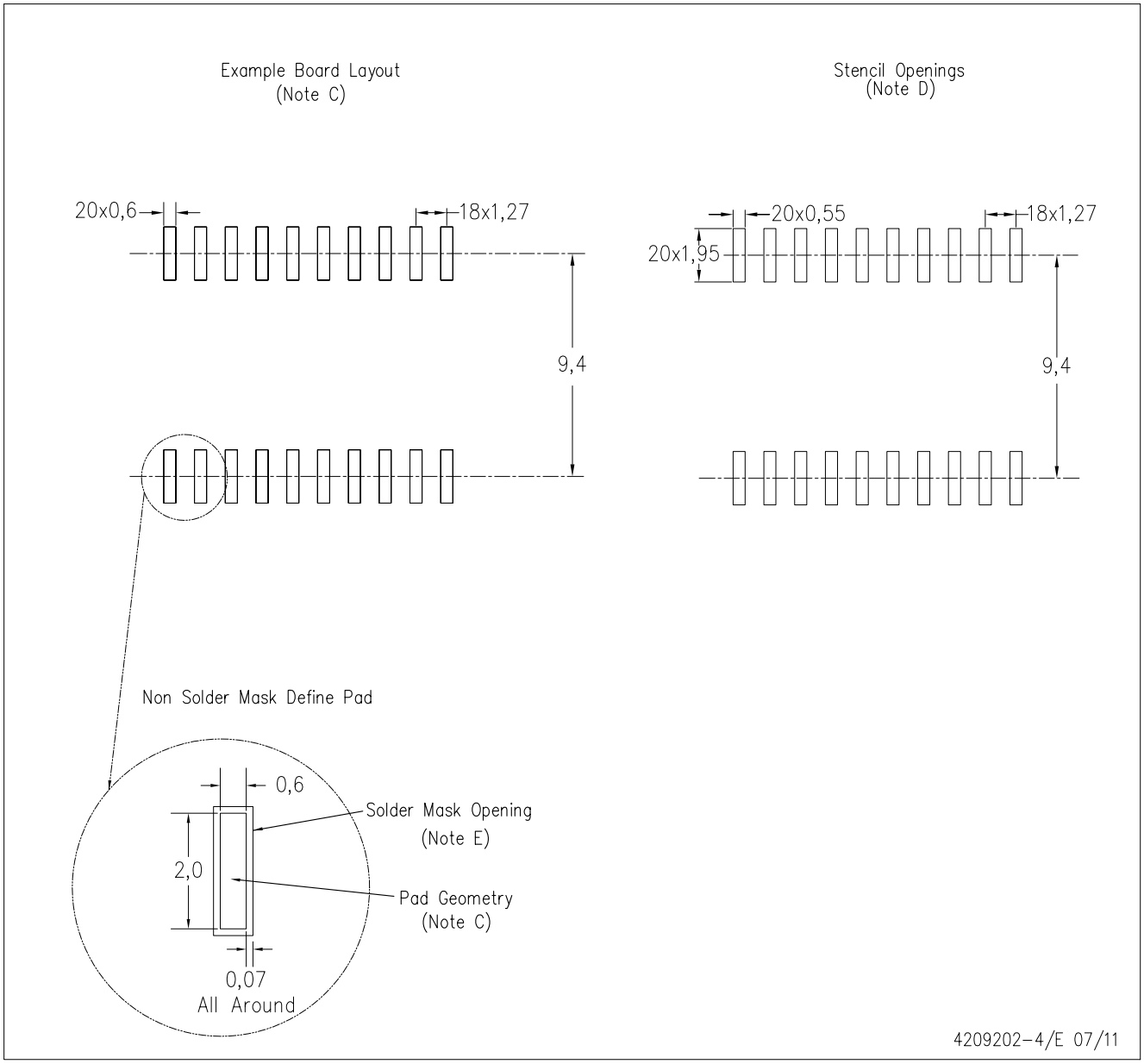

NOTES:
A. All linear dimensions are in millimeters.
B. This drawing is subject to change without notice.
C. Refer to IPC7351 for alternate board design.
D. Laser cutting apertures with trapezoidal walls and also rounding corners will offer better paste release. Customers should contact their board assembly site for stencil design recommendations. Refer to IPC–7525
E. Customers should contact their board fabrication site for solder mask tolerances between and around signal pads.

DB (R-PDSO-G)** **PLASTIC SMALL-OUTLINE**

28 PINS SHOWN

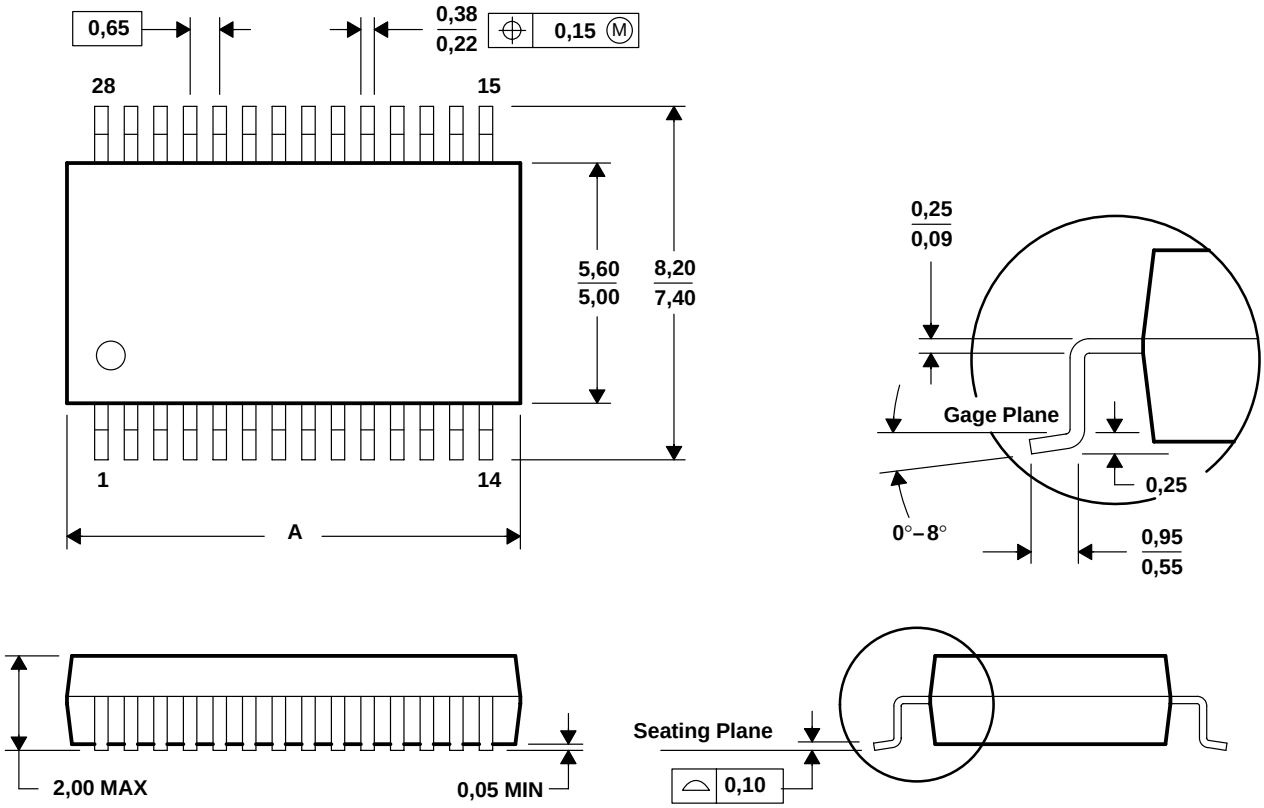

DIM \ PINS **	14	16	20	24	28	30	38
A MAX	6,50	6,50	7,50	8,50	10,50	10,50	12,90
A MIN	5,90	5,90	6,90	7,90	9,90	9,90	12,30

4040065 /E 12/01

NOTES: A. All linear dimensions are in millimeters.
B. This drawing is subject to change without notice.
C. Body dimensions do not include mold flash or protrusion not to exceed 0,15.
D. Falls within JEDEC MO-150

IMPORTANT NOTICE

Texas Instruments Incorporated and its subsidiaries (TI) reserve the right to make corrections, enhancements, improvements and other changes to its semiconductor products and services per JESD46C and to discontinue any product or service per JESD48B. Buyers should obtain the latest relevant information before placing orders and should verify that such information is current and complete. All semiconductor products (also referred to herein as “components”) are sold subject to TI’s terms and conditions of sale supplied at the time of order acknowledgment.

TI warrants performance of its components to the specifications applicable at the time of sale, in accordance with the warranty in TI’s terms and conditions of sale of semiconductor products. Testing and other quality control techniques are used to the extent TI deems necessary to support this warranty. Except where mandated by applicable law, testing of all parameters of each component is not necessarily performed.

TI assumes no liability for applications assistance or the design of Buyers’ products. Buyers are responsible for their products and applications using TI components. To minimize the risks associated with Buyers’ products and applications, Buyers should provide adequate design and operating safeguards.

TI does not warrant or represent that any license, either express or implied, is granted under any patent right, copyright, mask work right, or other intellectual property right relating to any combination, machine, or process in which TI components or services are used. Information published by TI regarding third-party products or services does not constitute a license to use such products or services or a warranty or endorsement thereof. Use of such information may require a license from a third party under the patents or other intellectual property of the third party, or a license from TI under the patents or other intellectual property of TI.

Reproduction of significant portions of TI information in TI data books or data sheets is permissible only if reproduction is without alteration and is accompanied by all associated warranties, conditions, limitations, and notices. TI is not responsible or liable for such altered documentation. Information of third parties may be subject to additional restrictions.

Resale of TI components or services with statements different from or beyond the parameters stated by TI for that component or service voids all express and any implied warranties for the associated TI component or service and is an unfair and deceptive business practice. TI is not responsible or liable for any such statements.

Buyer acknowledges and agrees that it is solely responsible for compliance with all legal, regulatory and safety-related requirements concerning its products, and any use of TI components in its applications, notwithstanding any applications-related information or support that may be provided by TI. Buyer represents and agrees that it has all the necessary expertise to create and implement safeguards which anticipate dangerous consequences of failures, monitor failures and their consequences, lessen the likelihood of failures that might cause harm and take appropriate remedial actions. Buyer will fully indemnify TI and its representatives against any damages arising out of the use of any TI components in safety-critical applications.

In some cases, TI components may be promoted specifically to facilitate safety-related applications. With such components, TI’s goal is to help enable customers to design and create their own end-product solutions that meet applicable functional safety standards and requirements. Nonetheless, such components are subject to these terms.

No TI components are authorized for use in FDA Class III (or similar life-critical medical equipment) unless authorized officers of the parties have executed a special agreement specifically governing such use.

Only those TI components which TI has specifically designated as military grade or “enhanced plastic” are designed and intended for use in military/aerospace applications or environments. Buyer acknowledges and agrees that any military or aerospace use of TI components which have ***not*** been so designated is solely at the Buyer's risk, and that Buyer is solely responsible for compliance with all legal and regulatory requirements in connection with such use.

TI has specifically designated certain components which meet ISO/TS16949 requirements, mainly for automotive use. Components which have not been so designated are neither designed nor intended for automotive use; and TI will not be responsible for any failure of such components to meet such requirements.

Products		**Applications**	
Audio	www.ti.com/audio	Automotive and Transportation	www.ti.com/automotive
Amplifiers	amplifier.ti.com	Communications and Telecom	www.ti.com/communications
Data Converters	dataconverter.ti.com	Computers and Peripherals	www.ti.com/computers
DLP® Products	www.dlp.com	Consumer Electronics	www.ti.com/consumer-apps
DSP	dsp.ti.com	Energy and Lighting	www.ti.com/energy
Clocks and Timers	www.ti.com/clocks	Industrial	www.ti.com/industrial
Interface	interface.ti.com	Medical	www.ti.com/medical
Logic	logic.ti.com	Security	www.ti.com/security
Power Mgmt	power.ti.com	Space, Avionics and Defense	www.ti.com/space-avionics-defense
Microcontrollers	microcontroller.ti.com	Video and Imaging	www.ti.com/video
RFID	www.ti-rfid.com		
OMAP Mobile Processors	www.ti.com/omap	**TI E2E Community**	e2e.ti.com
Wireless Connectivity	www.ti.com/wirelessconnectivity		

Mailing Address: Texas Instruments, Post Office Box 655303, Dallas, Texas 75265
Copyright © 2012, Texas Instruments Incorporated

Общество с ограниченной ответственностью «МосЧип» ИНН 7719860671 / КПП 771901001
Адрес: 105318, г.Москва, ул.Щербаковская д.3, офис 1107

Данный компонент на территории Российской Федерации

Вы можете приобрести в компании MosChip.

Для оперативного оформления запроса Вам необходимо перейти по данной ссылке:

http://moschip.ru/get-element

Вы можете разместить у нас заказ для любого Вашего проекта, будь то серийное производство или разработка единичного прибора.

В нашем ассортименте представлены ведущие мировые производители активных и пассивных электронных компонентов.

Нашей специализацией является поставка электронной компонентной базы двойного назначения, продукции таких производителей как XILINX, Intel (ex.ALTERA), Vicor, Microchip, Texas Instruments, Analog Devices, Mini-Circuits, Amphenol, Glenair.

Сотрудничество с глобальными дистрибьюторами электронных компонентов, предоставляет возможность заказывать и получать с международных складов практически любой перечень компонентов в оптимальные для Вас сроки.

На всех этапах разработки и производства наши партнеры могут получить квалифицированную поддержку опытных инженеров.

Система менеджмента качества компании отвечает требованиям в соответствии с ГОСТ Р ИСО 9001, ГОСТ РВ 0015-002 и ЭС РД 009

Офис по работе с юридическими лицами:

105318, г.Москва, ул.Щербаковская д.3, офис 1107, 1118, ДЦ «Щербаковский»

Телефон: +7 495 668-12-70 (многоканальный)

Факс: +7 495 668-12-70 (доб.304)

E-mail: info@moschip.ru

Skype отдела продаж:
moschip.ru
moschip.ru_4
moschip.ru_6
moschip.ru_9