Amphenol Information, Communications, and Commercial

# Amphenol

# Modular Jacks

## PRODUCT CATALOGUE

## The Company

Amphenol Commercial Products Group of Amphenol Canada Corp., a subsidiary of Amphenol Corporation, is an ISO 9001 certified facility located in Toronto, Canada. Our activities are dedicated to the design, development, and manufacturing of interconnect products intended for use in the data communications and telecommunications markets. Our expertise in understanding and supporting our customers' interconnect needs has earned Amphenol Canada a reputation of quality and excellence among the world's leading users of electronic components.

## About the Catalogue

This modular jack catalogue represents some of our more popular products within this product category. Other product categories include, but are not limited to: D-Sub, Micro-Ribbon, USB, Headers and Sockets, CoolPower connectors, VHDCI, Capacitively Decoupled BNC, filtered connectors (D-Subs and micro-ribbon), and rugged connectors (RJ, USB, D-Subs, and bulkhead adapters).

All of our modular jacks are RoHS compliant.
All drawings in this document are measured in inches [mm], unless otherwise indicated.

**Notice:** Specifications are subject to change without notice. Contact your nearest Amphenol sales office for the latest specifications. All statements, information, and data given herein are believed to be accurate and reliable, but are presented without guarantee, warranty, or responsibility of any kind, expressed, or implied. Statements or suggestions concerning possible use of our products are made without representation or warranty that any such use is free of patent infringement, and are not recommended to infringe any patent. The user should not assume that all safety measures are indicated or that other measures may not be required. Amphenol and RJ vista are registered trademarks.

# CONTENTS

## Right Angle (Side Entry)


### THROUGH-HOLE

| | | |
|---|---|---|
| RJHSE | Tab Up, Multiport | 5-8 |
| RJESE | Tab Up, Standard Profile | 9-11 |
| RJE29 | Tab Up, Slim Profile | 12-13 |
| RJE37 | Tab Up, Single Port, Low Profile | 14-15 |
| RJE39 | Tab Up, Narrow, 2 and 8 Port | 16-17 |
| RJE01 | Tab Up, RJ11 (Six Position) | 18-19 |
| RJSBE | Tab Down, 1, 2 and 4 Port | 20-22 |
| FRJAE | Tab Down, Filtered and Shielded | 23-25 |
| RJE02 | Tab Down, Single Port, High Profile | 26-27 |
| RJE03 | Tab Down, Single Port, Low Profile | 28-29 |
| RJE05 | Tab Down, Ultra Low Profile | 30-31 |
| RJE09 | Tab Down, Standard Profile | 32-34 |
| RJULE | Tab Down, Recessed, Low Profile | 35-36 |
| RJE73 | Tab Down, Single Port, Low Profile | 37-38 |

### SURFACE MOUNT

| | | |
|---|---|---|
| RJSSE | Tab Up, with Light Pipes | 39-40 |
| RJCSE | Tab Up, Standard Profile | 42-43 |
| RJLSE | Tab Down, Ultra Low Profile | 45-46 |
| RJE07 | Tab Down, Single Port | 46-47 |
| RJE15 | Tab Down, Single Port, Low Profile | 48-49 |

### PRESS FIT

| | | |
|---|---|---|
| RJE56 | Tab Down, RJ45 | 50-51 |

### STACKED

| | | |
|---|---|---|
| RJE36 | Stacked, RJ45 Over USB | 66-67 |
| RJSAE | Stacked, 2, 4 and 8 Ports | 68-69 |
| RJSNE | Stacked, 4 over 4 Ports | 70-71 |


## Additional Products


| | | |
|---|---|---|
| RJE17 | RJ45 Coupler | 99-100 |
| Coming Soon & Other | | 100-103 |


## Vertical (Top Entry)


### THROUGH-HOLE

| | | |
|---|---|---|
| RJHSE | Multiport, Standard Profile | 5-8 |
| RJE06 | Single Port, Slim Profile | 52-53 |
| RJE08 | Single/Dual Port, Standard Profile | 54-55 |
| RJE74 | Single Port, Standard Profile | 56-57 |
| RJE88 | Single Port, Low Profile | 58-59 |
| RJE1J | Single Port, Narrow Profile | 60-61 |
| RJE4N | Vertical, 2x4 Port | 62-63 |

### SURFACE MOUNT

| | | |
|---|---|---|
| RJE23 | Single Port, Surface Mount | 64-65 |


## Category 5e (1G, 2.5G)


| | | |
|---|---|---|
| RJE48 | Right Angle, Low Profile | 72-73 |
| RJE58 | Right Angle, Standard Profile | 74-76 |
| RJE72 | Right Angle, Recessed, Low Profile | 77-78 |
| RJSGE | Stacked, Press Fit, 2 over 2 Ports | 79-80 |
| RJE1R | Stacked, 1 over 1 Ports | 90-91 |


## Category 6 (5G, 10G)


| | | |
|---|---|---|
| RJE45 | Vertical, Single Port, Low Profile | 81-82 |
| RJE49 | Right Angle, Low Profile | 83-84 |
| RJE59 | Right Angle, Standard Profile | 85-87 |
| RJE71 | Right Angle, Recessed, Low Profile | 88-89 |
| RJE1R | Stacked, 1 over 1 Ports | 90-91 |


## Category 6A (10G)


| | | |
|---|---|---|
| RJE4A | Vertical, Single Port, Low Profile | 92-93 |
| RJE7B | Right Angle, Recessed, Low Profile | 94-95 |
| RJE60 | Right Angle, Standard Profile | 96-97 |

LED OPTIONS 3


**Note:** Denotes LEDs are available for connectors in the series

# LED OPTIONS

## LED Designation

| LED Code | LED 2 Left | | LED 1 Right | |
|---|---|---|---|---|
| 0 | Blocked | | Blocked | |
| 1 | Yellow | | Green | |
| 2 | Blocked | | Green | |
| 3 | Yellow | | Blocked | |
| 4 | Green | | Yellow | |
| 5 | Green | | Green | |
| 6 | Yellow | | Yellow | |
| 7 | Red | | Green | |
| 8 | Green | | Red | |
| 9 | Green | | Blocked | |
| A | Green | Yellow | Green | Yellow |
| B | Red | Green | Red | Green |
| C | Red | Green | Green | Yellow |
| D | Green | | Green | Yellow |
| E | Yellow | | Green | Yellow |
| F | Green | Yellow | Yellow | |
| G | Green | Orange | Green | Orange |
| H | Green | Yellow | Green | |
| J | Red | Green | Yellow | |
| K | Yellow | | Green | Orange |
| L | Green | Yellow | Red | |
| M | Red | | Yellow | |
| N | Green | Red | Green | Yellow |
| P | Green | | Red | Green |
| R | Green | Orange | Green | |
| T | Red | | Red | |
| V | Red | Green | Green | |

**Ex. RJHSE - 538X***

***LED Designation Code**

Note: A black X in the part number refers to the LED designation code for all drawings in this catalogue.

**Tab Up Connectors:**

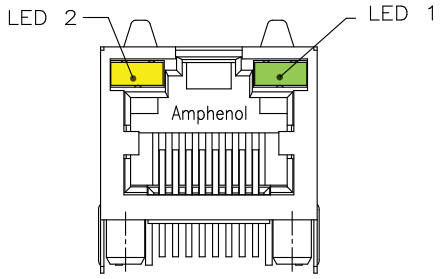


**Tab Down Connectors:**

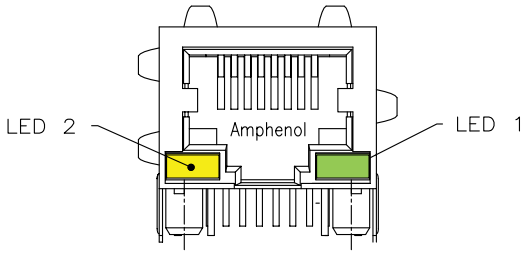


**Stacked Connectors:**

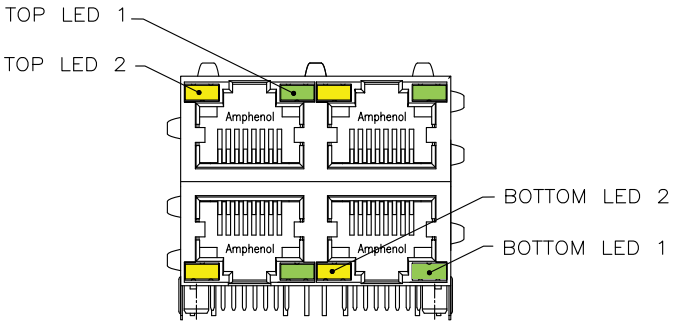


**Other LED options are available.** If you do not see what you're looking for, please email sales@amphenolcanada.com to request the complete the LED ordering options.

Click to Return to Table of Contents

# WAVE SOLDER PROFILE

## Typical Wave Solder Profile for Leaded and Lead-Free Through-Hole Package

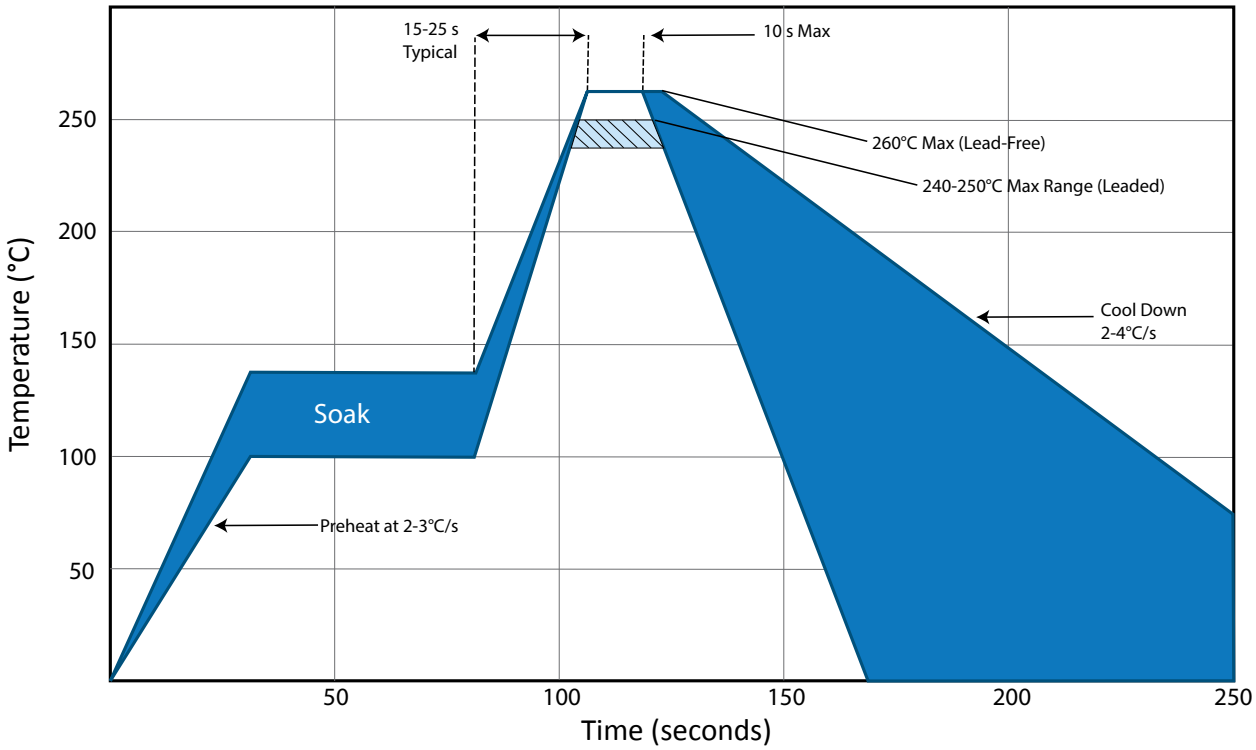


Click to Return to Table of Contents

# RJHSE

TAB UP, MULTIPORT, WITH LEDs

## TAB UP, MULTIPORT, WITH LEDs

A series of EMI Quiet Modular Jack connectors with built-in LEDs. This product is ideal for LAN applications such as adapter cards and routers. Shielded and non-shielded versions are available, with a variety of LED colors and ports.

## SPECIFICATIONS

### Material

| | |
|---|---|
| **Insulator:** | High temp. thermoplastic; Complies with UL 94V-0; Black |
| **Contacts:** | Phosphor bronze hard temper with gold thickness options (6µ", 15µ", 30µ", 50µ") over 50µ" min. nickel on contact mating area; 100µ" min. matte tin plating on soldering tail |
| **Shield:** | Stainless steel with tin dipped tails |
| **LED:** | Tin plating on LED tails |

### Mechanical

| | |
|---|---|
| **Insertion Force:** | 5 lbs max. |
| **Pull Retention Force:** | 20 lbs min. |
| **Durability:** | 750 mating & unmating cycles |
| **Recommended Soldering Temperature:** | Wave soldering peaked at 260°C for 5 secs max. |
| **Operating Temperature:** | -55°C to + 85°C |
| **UL File #:** | E135615 |
| **CSA File #:** | LR685398 |

*Note: Connectors without LEDs are suitable for IR Reflow*

### Electrical

| | |
|---|---|
| **Contact Resistance:** | 20 mΩ max. |
| **Insulation resistance:** | 500 MΩ min. at 500V DC for 2 mins max. |
| **Current Rating:** | 1.5 Amps per contact |
| **Voltage Rating:** | 125 Volts AC |
| **DWV:** | 1000 VAC, 60 Hz. 1 min. |
| **Standard LEDs:** | For 5.0 V Systems |
| **Forward Voltage:** | 2.1 Volts typical |
| **Reverse Voltage:** | 6 Volts min. |
| **Luminous Intensity:** | 0.5 mcd min. at 2mA |
| **Low Current LEDs:** | For 3.3 V Systems |
| **Forward Voltage:** | 2 Volts typical |
| **Reverse Voltage:** | 6 Volts min. |
| **Luminous Intensity:** | 1 mcd min. at 2mA |

**Note:** Vertical version is only available in single port

## ORDERING INFORMATION

RJHSE - X X X X - XX

**Version**

3 - Vertical mount, 8 positions, 30µ" gold plating
5 - Right angle, 8 positions, 50µ" gold plating
7 - Right angle, 6 positions, 50µ" gold plating
L - Right angle, low profile, 8 positions, 50µ" gold plating
N - Vertical mount, 8 positions, 50µ" gold plating

**Shield Options**

0 - No shield
3 - Shield with top and side tabs (single port has top tabs only)
4 - For single port only: Shield with top and side tabs
F - Shield without top, side or bottom tabs
P - Shield with top & bottom tabs, for vertical mount connector

**Number of Ports**

Blank - 1 Port
02 - 2 Ports
03 - 3 Ports
04 - 4 Ports
06 - 6 Ports
08 - 8 Ports

**LED Options**

Click to view page 3 for options

**Number of Contacts**

4 - 4 Contacts
6 - 6 Contacts
8 - 8 Contacts

**Didn't find what you were looking for?**
Please contact sales@amphenolcanada.com and let us know what you need.

Click to Return to Table of Contents


Amphenol Commercial Products - Amphenol Canada Corp. | Telephone: (416) 291-4401 | Fax: (416) 754-8668 | Email: sales@amphenolcanada.com
All specifications are subject to change without notice. Catalogue is updated regularly. Please refer to www.amphenolcanada.com for the most recent edition.

# RJHSE

TAB UP, MULTIPORT, WITH LEDs

## Single Port

**RJHSE-508X**

### Non-Shielded

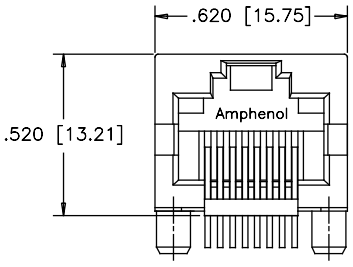


FRONT VIEW

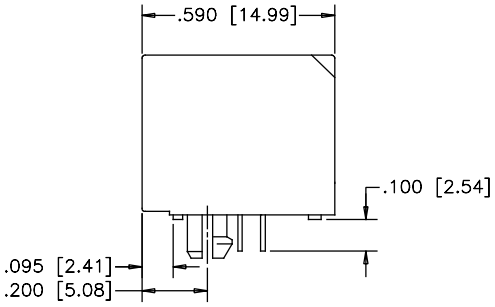


SIDE VIEW

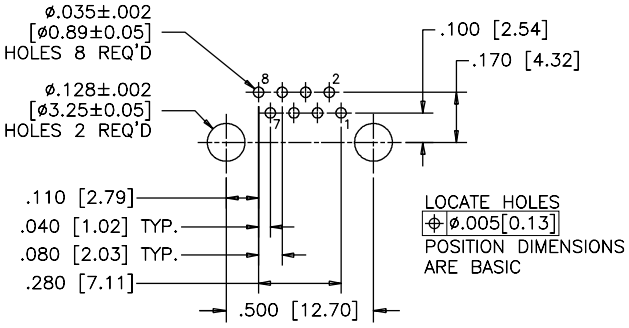


RECOMMENDED PCB LAYOUT

## Shielded - With Top & Side Ground Tabs

**RJHSE-548X**

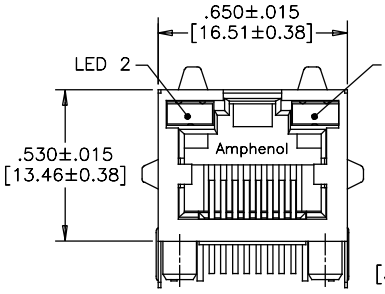


FRONT VIEW

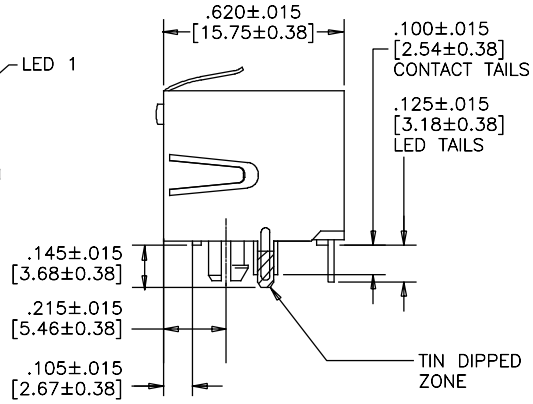


SIDE VIEW

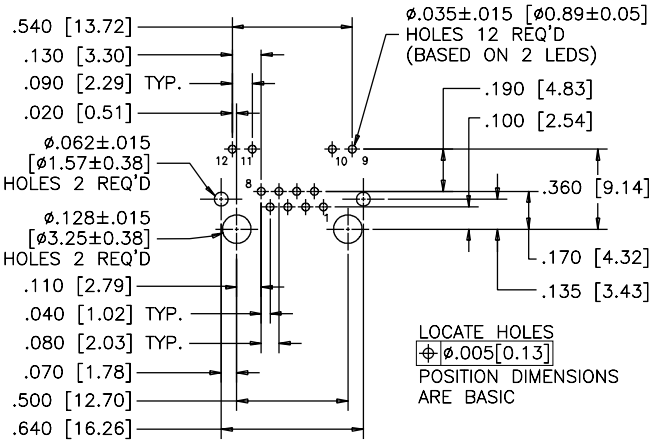


RECOMMENDED PCB LAYOUT

## Vertical Mount

**RJHSE-338X**

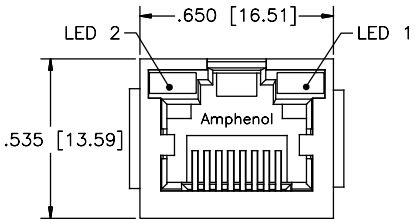


FRONT VIEW

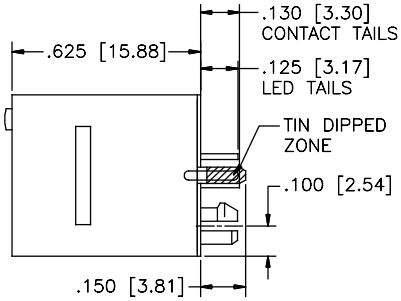


SIDE VIEW

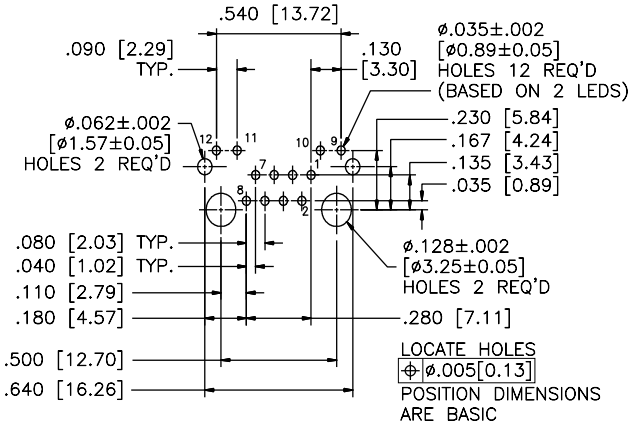


RECOMMENDED PCB LAYOUT

# RJHSE

TAB UP, MULTIPORT, WITH LEDs

## Single Port

**RJHSE-L38X**

### Shielded - Low Profile

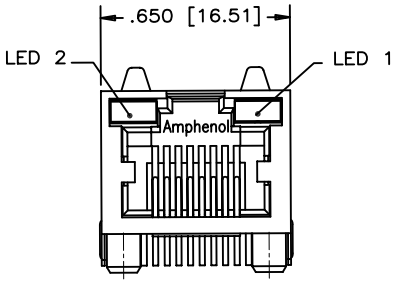


FRONT VIEW

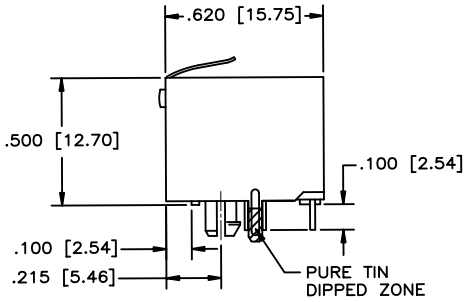


SIDE VIEW

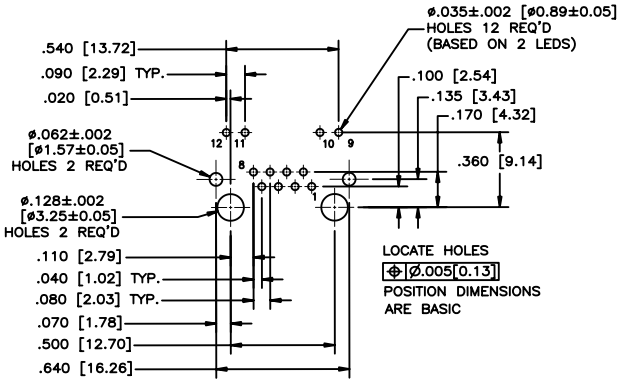


RECOMMENDED PCB LAYOUT

## Multi Port

**RJHSE-508X-04**

### Non-Shielded

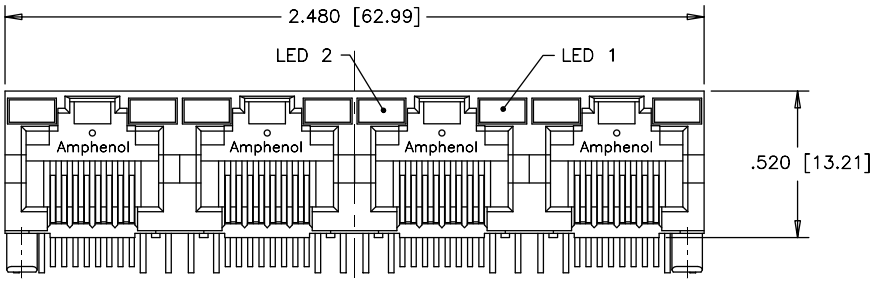


FRONT VIEW

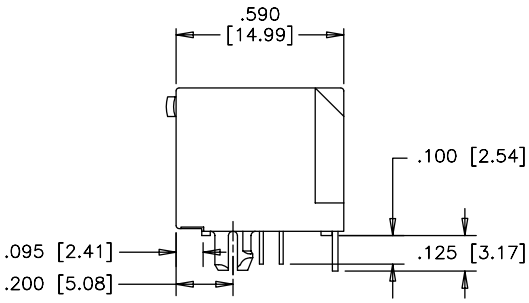


SIDE VIEW

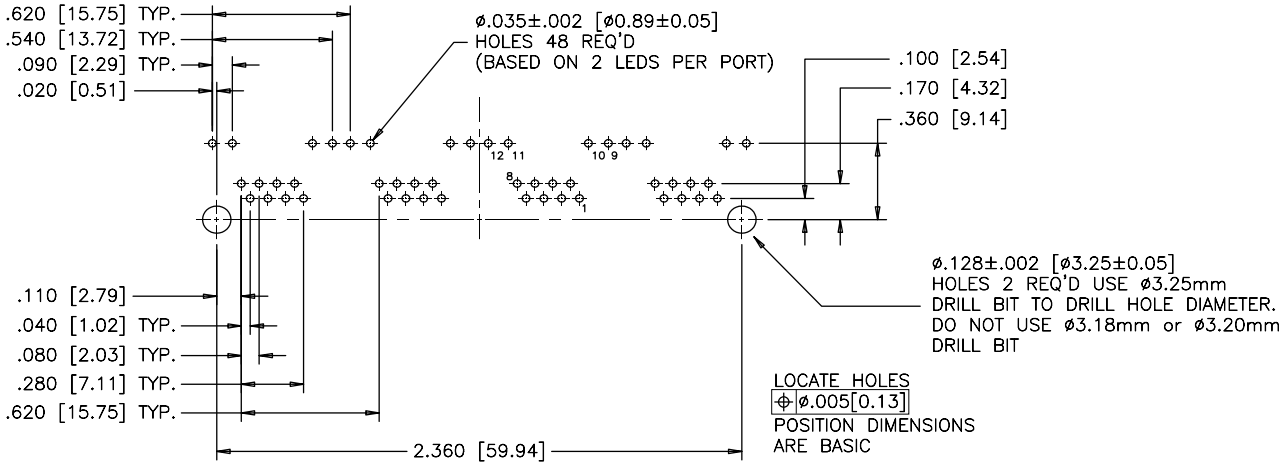


RECOMMENDED PCB LAYOUT


Amphenol Commercial Products - Amphenol Canada Corp. | Telephone: (416) 291-4401 | Fax: (416) 754-8668 | Email: sales@amphenolcanada.com
All specifications are subject to change without notice. Catalogue is updated regularly. Please refer to www.amphenolcanada.com for the most recent edition.

# Multi Port

## Shielded

**RJHSE-538X-04**

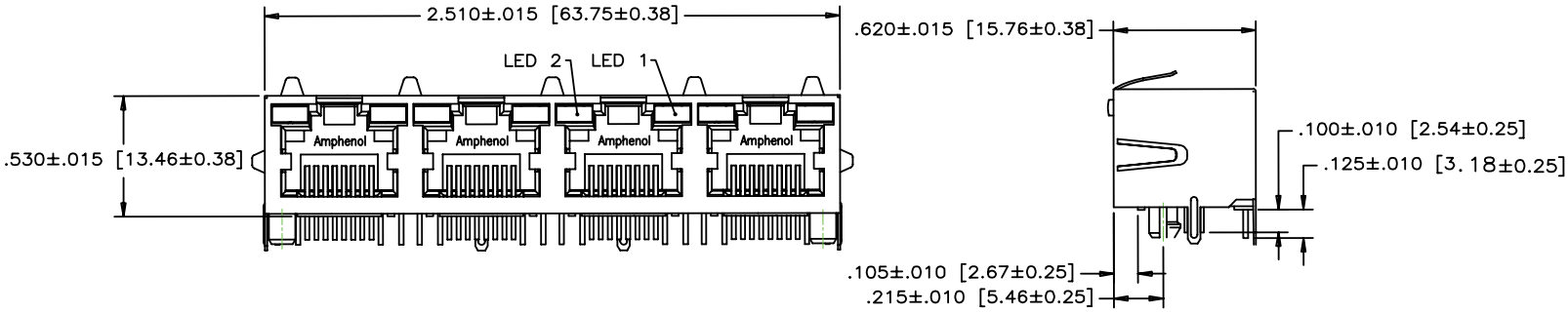


FRONT VIEW

SIDE VIEW

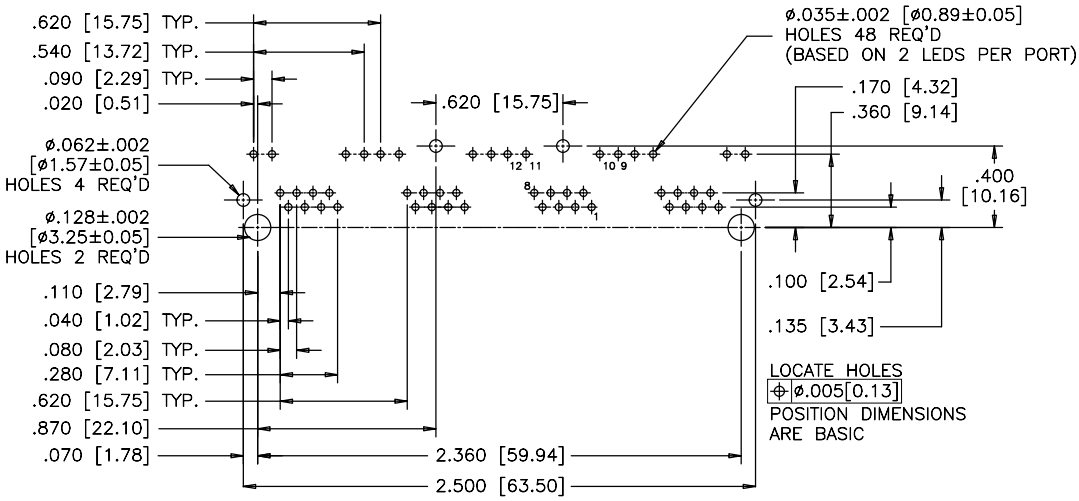


RECOMMENDED PCB LAYOUT

### *Notes*

# RJESE

TAB UP, RJ45 & RJ11, STANDARD PROFILE

## TAB UP, RJ45 & RJ11, STANDARD PROFILE

This family of EMI quiet modular jack connectors with integrated LEDs features the same data transfer capabilities as our existing series of LED-integrated modular jacks. This product is an economical solution ideal for LAN applications and is intended for use with low temperature soldering processes. Shielded and non-shielded versions are available with a variety of LED options. Also offered in both single and multi port configurations.

## SPECIFICATIONS

### Material

| | |
|---|---|
| **Insulator:** | Engineering thermoplastic;<br>Complies with UL 94V-0; Black |
| **Contacts:** | Phosphor bronze hard temper with gold thickness options (6µ", 15µ", 30µ", 50µ") over 50µ" min. nickel on contact mating area; 100µ" min. matte tin plating on soldering tail |
| **Shield:** | Stainless steel with tin dipped tails |
| **LED:** | Tin plating on LED tails |

### Mechanical

| | |
|---|---|
| **Insertion Force:** | 5 lbs max. |
| **Pull Retention Force:** | 20 lbs min. |
| **Durability:** | 750 mating & unmating cycles |
| **Recommended Soldering Temperature:** | Wave soldering peaked at 260°C for 5 secs max. |
| **Operating Temperature:** | -55°C to + 85°C |
| **UL File:** | E135615 |

### Electrical

| | |
|---|---|
| **Contact Resistance:** | 20 mΩ max. |
| **Insulation resistance:** | 500 MΩ min. at 500V DC for 2 mins max. |
| **Current Rating:** | 1.5 Amps per contact |
| **Voltage Rating:** | 125 Volts AC |
| **DWV:** | 1000 VAC, 60 Hz. 1 min. |
| **LED Forward DC Current:** | 20mA typical |
| **LED Forward Voltage:** | 1.9 Volts max. at 2mA (for single colours)<br>2.6 Volts max. at 2mA (for bicolours) |
| **LED Reverse Voltage:** | 5 Volts min. |
| **LED Light Intensity:** | 0.4 to 1.5 mcd min. at 2mA (for single colours)<br>0.5 mcd min. at 2mA (for bicolours) |
| **LED Wave Length:** | Yellow: 587 ± 7 nm measured at 20mA<br>Green: 565 ± 6 nm measured at 20mA<br>Red: 625 ± 5 nm measured at 20mA |

## ORDERING INFORMATION

RJESE - X X X X - X X XX

**Version**
- 3 - Vertical mount, 8 positions, with panel stops
- 7 - Right angle, 6 positions
- 8 - Right angle, 8 positions

**Shield Options**
- 0 - No shield
- 3 - Standard shield, 1 to 8 port (single port without side tabs)
- 4 - Single port shield, top and side tabs

**Number of Contacts**
- 4 - 4 Contacts
- 6 - 6 Contacts
- 8 - 8 Contacts

**LED Options**
- Click to view page 3 for options

**Special Identifier**
- Blank - Standard black housing
- 02 - Yellow housing colour
- 03 - Red housing colour

**Number of Ports**
- 1 -1 Port
- 2 - 2 Ports
- 4 - 4 Ports

**Contact Plating**
- 0 - 6µ" gold plating
- 1 - 15µ" gold plating
- 2 - 30µ" gold plating
- 3 - 50µ" gold plating
- F - 1~3µ" gold plating

Click to Return to Table of Contents


Amphenol Commercial Products - Amphenol Canada Corp. | Telephone: (416) 291-4401 | Fax: (416) 754-8668 | Email: sales@amphenolcanada.com
All specifications are subject to change without notice. Catalogue is updated regularly. Please refer to www.amphenolcanada.com for the most recent edition.

# RJESE

TAB UP, RJ45 & RJ11, STANDARD PROFILE

## Single Port

### Non-Shielded

**RJESE-808X-X1**

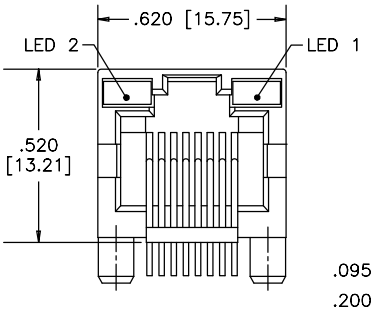


FRONT VIEW

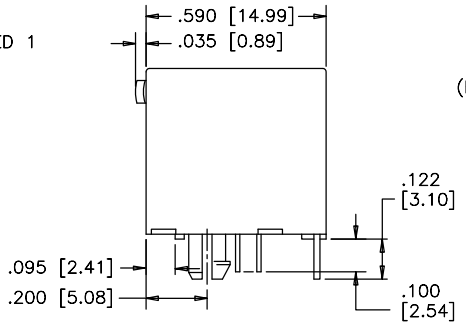


SIDE VIEW

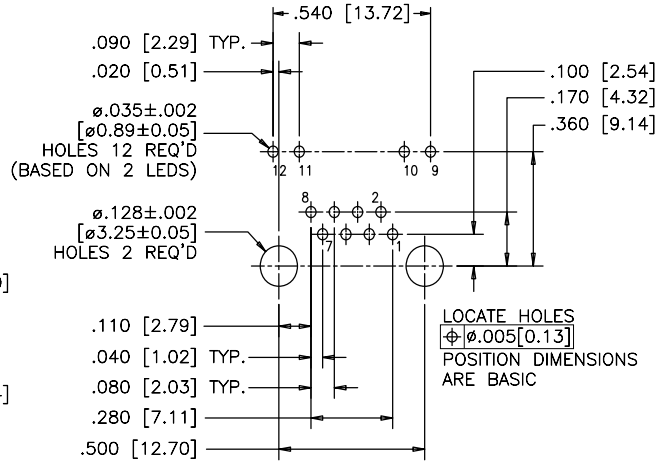


RECOMMENDED PCB LAYOUT

## Shielded

**RJESE-848X-X1**

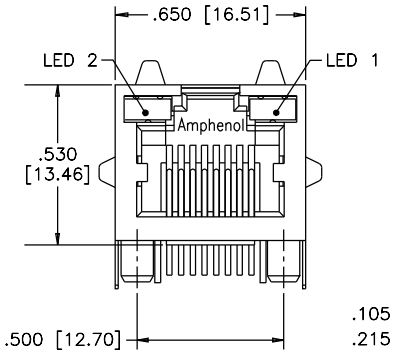


FRONT VIEW

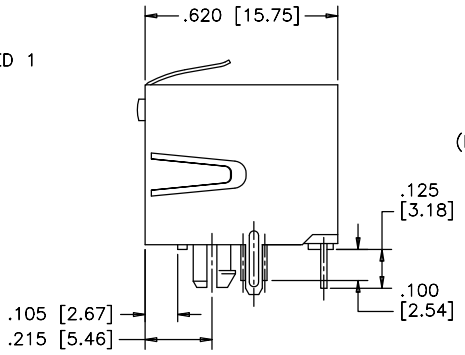


SIDE VIEW

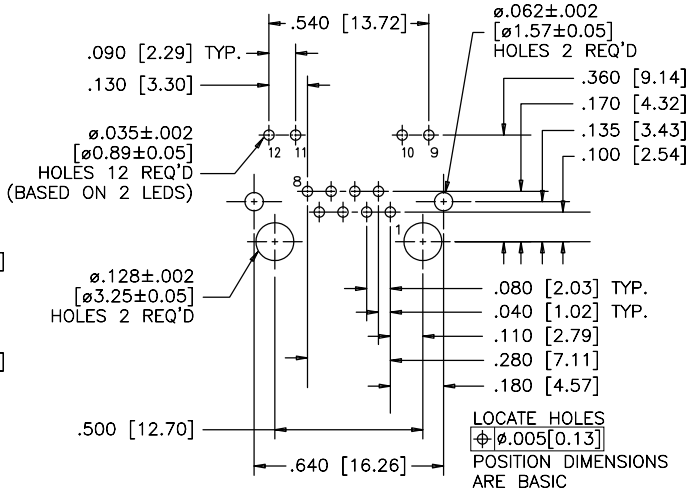


RECOMMENDED PCB LAYOUT

**Didn't find what you were looking for?**
Please contact sales@amphenolcanada.com and let us know what you need.

# RJESE

TAB UP, RJ45 & RJ11, STANDARD PROFILE

## Multi Port

**RJESE-808X-X4**

### Non-Shielded

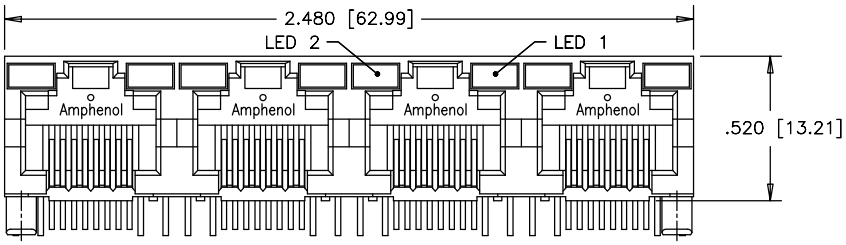


FRONT VIEW

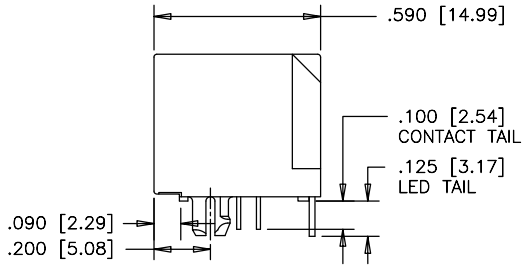


SIDE VIEW

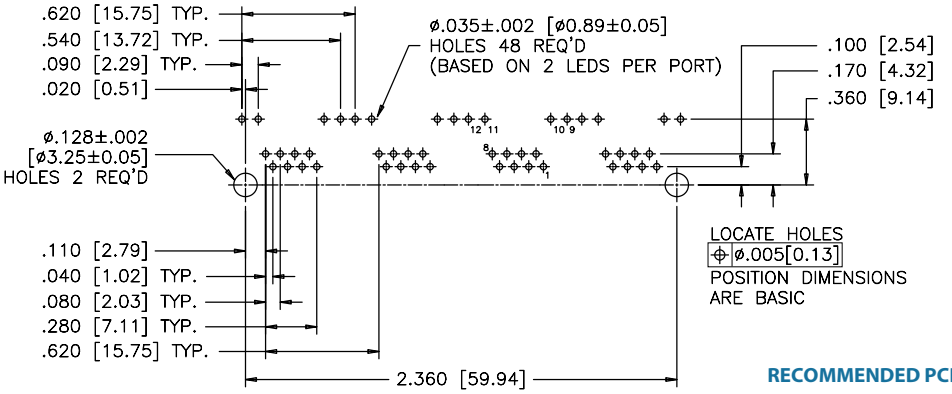


RECOMMENDED PCB LAYOUT

### Shielded

**RJESE-838X-X4**

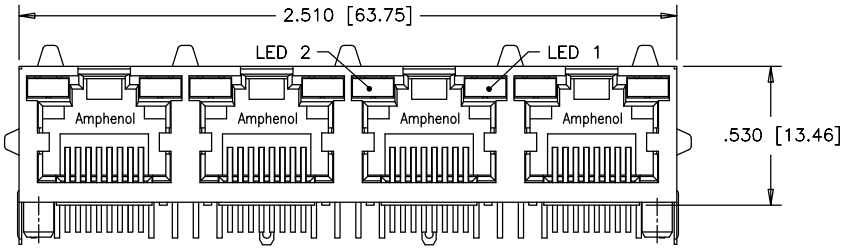


FRONT VIEW

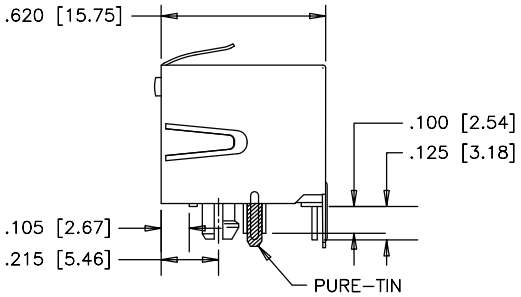


SIDE VIEW

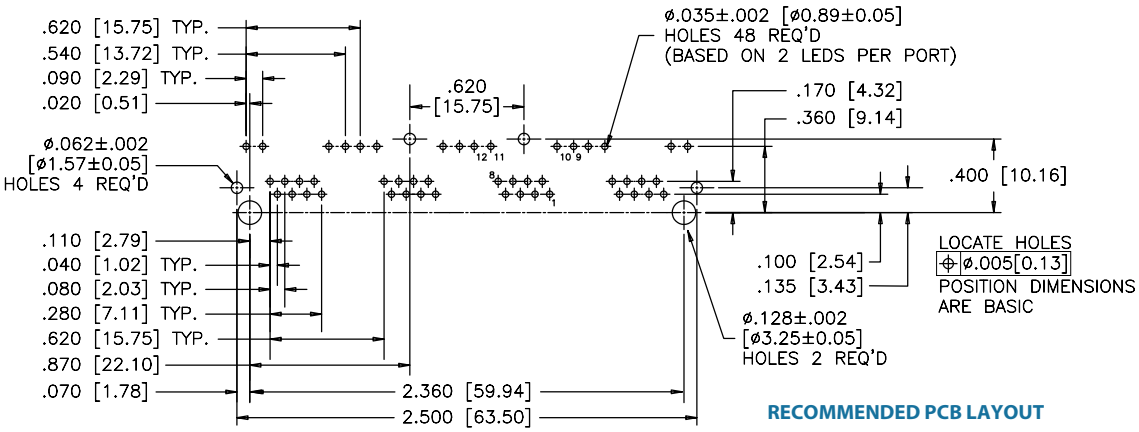


RECOMMENDED PCB LAYOUT


Amphenol Commercial Products - Amphenol Canada Corp. | Telephone: (416) 291-4401 | Fax: (416) 754-8668 | Email: sales@amphenolcanada.com
All specifications are subject to change without notice. Catalogue is updated regularly. Please refer to www.amphenolcanada.com for the most recent edition.

# RJE29

TAB UP, SLIM PROFILE

## TAB UP, SLIM PROFILE

RJE29 series is designed to meet a wide variety of applications. Available in multiple positions and contacts to support basic telecom and Ethernet protocols. Shielding is available for increased EMI performance.

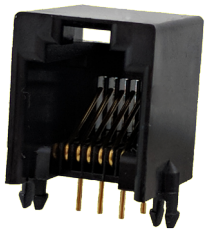

## SPECIFICATIONS

### Material

| | |
|---|---|
| **Insulator:** | High temp. thermoplastic;<br>Complies with UL 94V-0; Black |
| **Contacts:** | Phosphor bronze hard temper with gold thickness options (6µ", 15µ", 30µ", 50µ") over 50µ" min. nickel on contact mating area; 100µ" min. matte tin plating on soldering tail |
| **Shield:** | Stainless steel with tin dipped tails |
| **LED:** | Tin plating on LED tails |

### Electrical

| | |
|---|---|
| **Contact Resistance:** | 40 mΩ max. |
| **Insulation resistance:** | 500 MΩ min. at 100V DC |
| **Current Rating:** | 1.5 Amps |
| **Voltage Rating:** | 150 Volts AC |
| **DWV:** | 1000 VAC, 60 Hz. 1 min. |

### Mechanical

| | |
|---|---|
| **Insertion Force:** | 4 contacts: 1.8 Kgf Max<br>6 contacts: 2.1 Kgf Max<br>8 contacts: 2.3 Kgf Max<br>10 contacts: 2.5Kgf Max |
| **Pull Retention Force:** | 20 lbs min. |
| **Durability:** | 750 mating & unmating cycles with 50u" |
| **Recommended Soldering Temperature:** | Wave soldering peaked at 260°C for 5 secs max. |
| **Operating Temperature:** | -40°C to + 85°C |
| **UL File Number:** | E136228 |

## ORDERING INFORMATION

RJE29 - 1 X X - X X X X

**Number of Ports**
1 - 1 Port

**Number of Positions**
4 - 4 Positions
6 - 6 Positions
8 - 8 Positions

**Number of Contacts**
4 - 4 Positions
6 - 6 Positions
8 - 8 Positions

**Modifier**
0 - Standard product
1 - 15mm housing depth

**Panel Stop Options**
1 - Without panel stops
2 - With panel stops

**Contact Plating**
1 - 6µ" gold plating
2 - 15µ" gold plating
3 - 30µ" gold plating
4 - 50µ" gold plating

**Shield Options**
0 - No shield
1 - Shield with no EMI tabs

**Didn't find what you were looking for?**
Please contact sales@amphenolcanada.com and let us know what you need.

Click to Return to Table of Contents

# RJE29

TAB UP, SLIM PROFILE

## Single Port

### Non-Shielded

**RJE29-144-0X10**

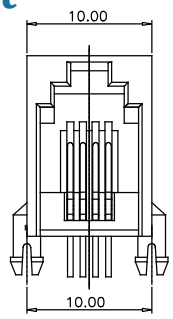


FRONT VIEW

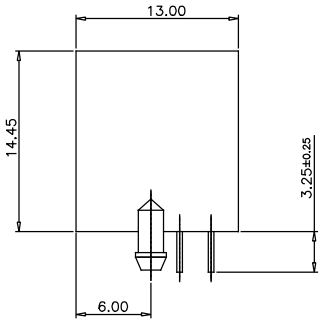


SIDE VIEW

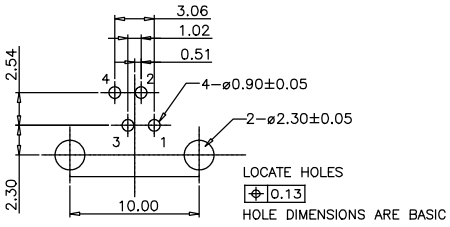


RECOMMENDED PCB LAYOUT

### Non-Shielded

**RJE29-166-0X10**

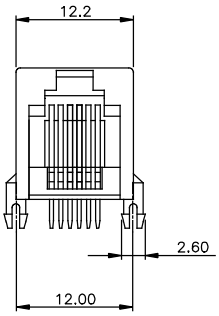


FRONT VIEW

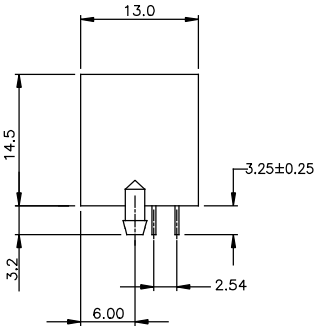


SIDE VIEW

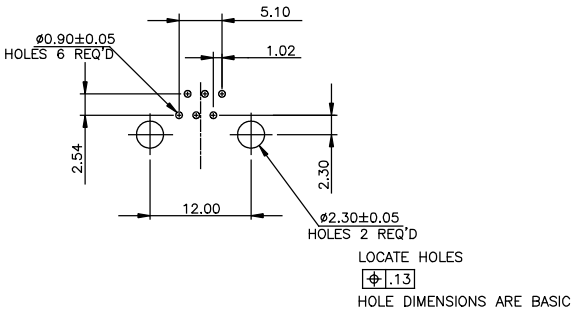


RECOMMENDED PCB LAYOUT

### Non-Shielded

**RJE29-188-0X10**

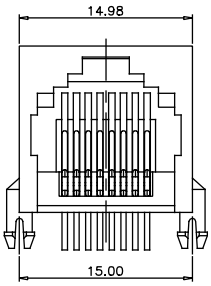


FRONT VIEW

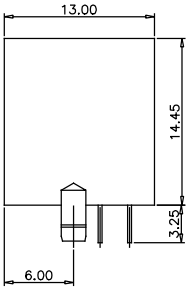


SIDE VIEW

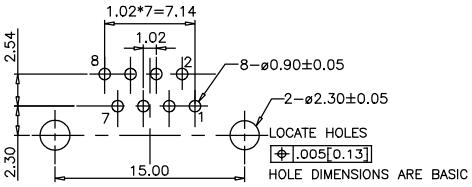


RECOMMENDED PCB LAYOUT

### Shielded

**RJE29-188-1X10**

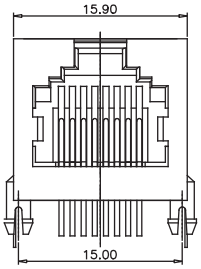


FRONT VIEW

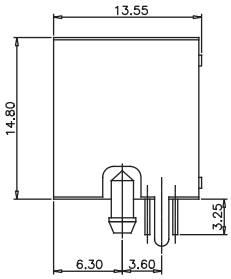


SIDE VIEW

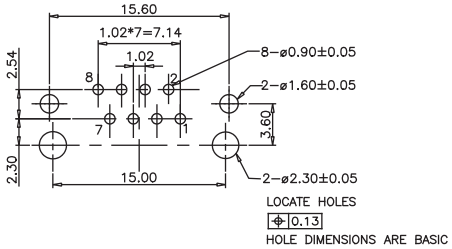


RECOMMENDED PCB LAYOUT


Amphenol Commercial Products - Amphenol Canada Corp. | Telephone: (416) 291-4401 | Fax: (416) 754-8668 | Email: sales@amphenolcanada.com
All specifications are subject to change without notice. Catalogue is updated regularly. Please refer to www.amphenolcanada.com for the most recent edition.

# RJE37

TAB UP, SINGLE PORT, LOW PROFILE, WITH LEDs

## TAB UP, SINGLE PORT, LOW PROFILE, WITH LEDs

Single port through-hole (THT) series with multiple shield and LED options. Similar to our single port RJHSE series, but with a slightly lower profile and longer body. Inverted latch orientation for easy mating with industry standard plugs.

## SPECIFICATIONS

### Material

| | |
|---|---|
| **Insulator:** | High temp. thermoplastic;<br>Complies with UL 94V-0; Black |
| **Contacts:** | Phosphor bronze hard temper with gold thickness options (6µ", 15µ", 30µ", 50µ") over 50µ" min. nickel on contact mating area; 100µ" min. matte tin plating on soldering tail |
| **Shield:** | Stainless steel with tin dipped tails |
| **LED:** | Tin plating on LED tails |

### Mechanical

| | |
|---|---|
| **Insertion Force:** | 5 lbs max. |
| **Pull Retention Force:** | 20 lbs min. |
| **Durability:** | 750 mating & unmating cycles |
| **Recommended Soldering Temperature:** | Wave soldering peaked at 260°C for 5 secs max. |
| **Operating Temperature:** | -55°C to + 85°C |
| **UL File Number:** | E135615 |

*Note: Connectors without LEDs are suitable for IR Reflow*

### Electrical

| | |
|---|---|
| **Contact Resistance:** | 20 mΩ max. |
| **Insulation resistance:** | 500 MΩ min. at 500V DC for 2 mins max. |
| **Current Rating:** | 1.5 Amps per contact |
| **Voltage Rating:** | 125 Volts AC |
| **DWV:** | 1000 VAC, 60 Hz. 1 min. |
| **LED Forward DC Current :** | 20mA typical |
| **LED Forward Voltage:** | 2.6 Volts max. at 2mA |
| **LED Reverse Voltage:** | 5 Volts min. |
| **LED Light Intensity:** | 0.4 to 1.5 mcd min. at 2mA (for single colours)<br>0.5 mcd min. at 2mA (for bicolours) |
| **LED Wave Length:** | Yellow: 585 ± 7 nm measured at 20mA<br>Green: 568 ± 6 nm measured at 20mA<br>Red: 640 ± 5 nm measured at 20mA |

## ORDERING INFORMATION

RJE37 - 1 8 8 - X X X 0

**Number of Ports**
1 - 1 Port

**Number of Positions**
8 - 8 Positions

**Number of Contacts**
8 - 8 Contacts

**Shield Options**
0 - No shield
1 - Shield with top and side tabs
2- Shield with top tabs only

**Modifier**
0 - Standard product

**LED Options**
Click to view page 3 for options

**Contact Plating**
1 - 6µ" gold plating
2 - 15µ" gold plating
3 - 30µ" gold plating
4 - 50µ" gold plating

**Didn't find what you were looking for?**
Please contact sales@amphenolcanada.com and let us know what you need.

Click to Return to Table of Contents

# RJE37

TAB UP, SINGLE PORT, LOW PROFILE, WITH LEDs

## Single Port

### Non-Shielded

**RJE37-188-0XX0**

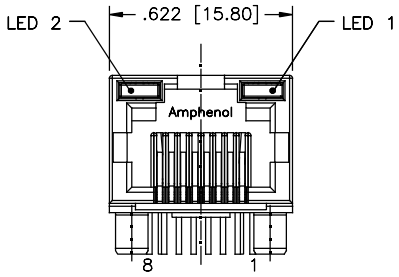


FRONT VIEW

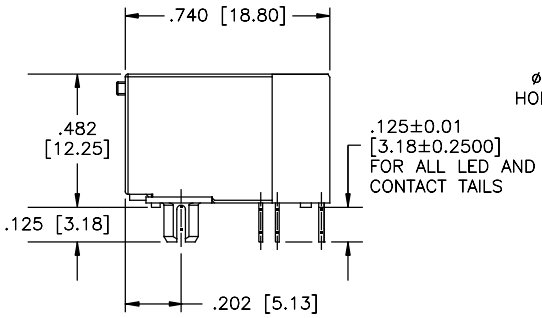


SIDE VIEW

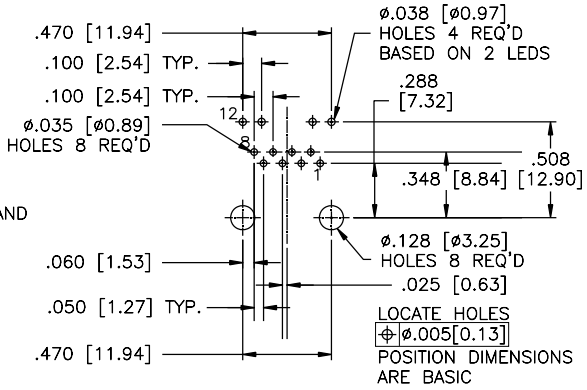


RECOMMENDED PCB LAYOUT

### Shielded - With Full Tabs

**RJE37-188-1XX0**

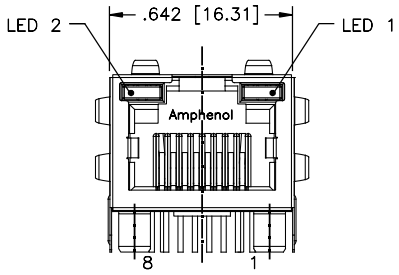


FRONT VIEW

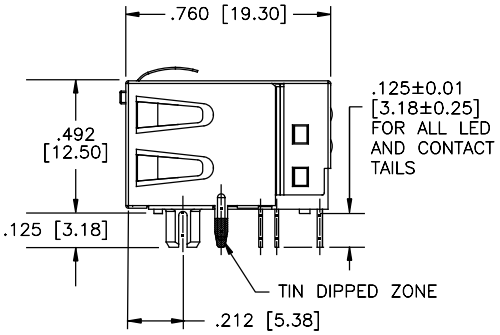


SIDE VIEW

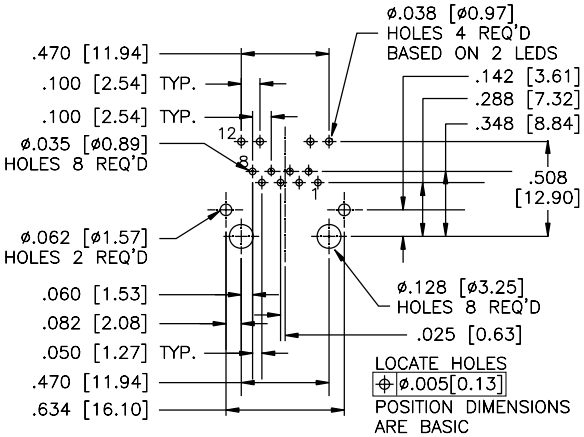


RECOMMENDED PCB LAYOUT

### Shielded - With Top Tabs Only

**RJE37-188-2XX0**

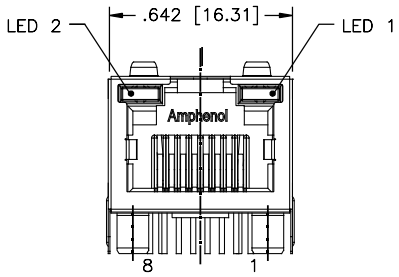


FRONT VIEW

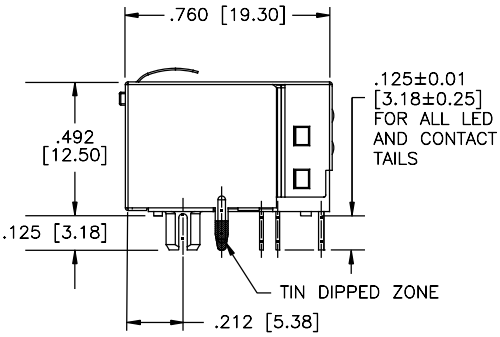


SIDE VIEW

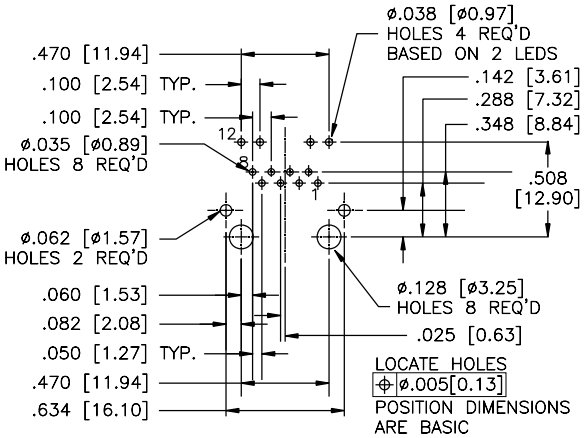


RECOMMENDED PCB LAYOUT


Amphenol Commercial Products - Amphenol Canada Corp. | Telephone: (416) 291-4401 | Fax: (416) 754-8668 | Email: sales@amphenolcanada.com
All specifications are subject to change without notice. Catalogue is updated regularly. Please refer to www.amphenolcanada.com for the most recent edition.

# RJE39

TAB UP, NARROW, TWO AND EIGHT PORT

## TAB UP, NARROW, TWO AND EIGHT PORT

Single and eight port through-hole (THT) series with multiple shield and LED options. Similar to the RJHSE series, but with a narrower profile. This series is ideal for programs that need multiple connectors, but have limited PCB space.

## SPECIFICATIONS

### Material

| | |
|---|---|
| **Insulator:** | High temp. thermoplastic; Complies with UL 94V-0; Black |
| **Contacts:** | Phosphor bronze hard temper with gold thickness options (6µ", 15µ", 30µ", 50µ") over 50µ" min. nickel on contact mating area; 100µ" min. matte tin plating on soldering tail |
| **Shield:** | Stainless steel with tin dipped tails |
| **LED:** | Tin plating on LED tails |

### Mechanical

| | |
|---|---|
| **Insertion Force:** | 5 lbs max. |
| **Pull Retention Force:** | 20 lbs min. |
| **Durability:** | 750 mating & unmating cycles |
| **Recommended Soldering Temperature:** | Wave soldering peaked at 260°C for 5 secs max. |
| **Operating Temperature:** | -55°C to + 85°C |
| **UL File Number:** | E135615 |

*Note: Connectors without LEDs are suitable for IR Reflow*

### Electrical

| | |
|---|---|
| **Contact Resistance:** | 20 mΩ max. |
| **Insulation resistance:** | 500 MΩ min. at 500V DC for 2 mins max. |
| **Current Rating:** | 1.5 Amps per contact |
| **Voltage Rating:** | 125 Volts AC |
| **DWV:** | 1000 VAC, 60 Hz. 1 min. |
| **LED Forward DC Current:** | 20mA typical |
| **LED Forward Voltage:** | 2.6 Volts max. at 2mA (for single colour) |
| **LED Reverse Voltage:** | 5 Volts min. |
| **LED Light Intensity:** | 4.5 to 6.0 mcd min. at 20mA (for single colours) |
| **LED Wave Length:** | Yellow: 588 ± 7 nm measured at 20mA<br>Green: 570 ± 6 nm measured at 20mA<br>Red: 628 ± 5 nm measured at 20mA |

## ORDERING INFORMATION

RJE39 - X 8 8 - X X X 0

**Number of Ports**
2 - 2 Port
8 - 8 Port

**Number of Positions**
8 - 8 Positions

**Number of Contacts**
8 -8 Contacts

**Shield Options**
0 - No shield
1 - Shield with top and side tabs

**Modifier**
0 - Standard product

**LED Options**
Click to view page 3 for options

**Contact Plating**
1 - 6µ" gold plating
2 - 15µ" gold plating
3 - 30µ" gold plating
4 - 50µ" gold plating

**Didn't find what you were looking for?**
Please contact sales@amphenolcanada.com and let us know what you need.

Click to Return to Table of Contents

# RJE39

TAB UP, NARROW, TWO AND EIGHT PORT

## Two Port

### Shielded

**RJE39-288-1XX0**

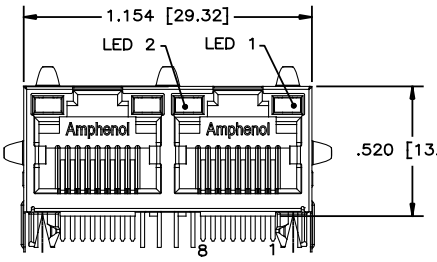


FRONT VIEW

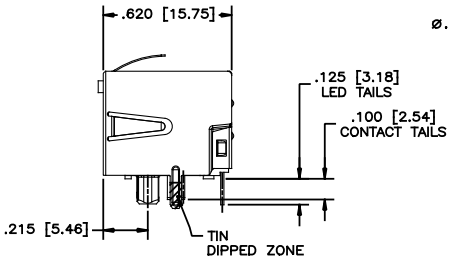


SIDE VIEW

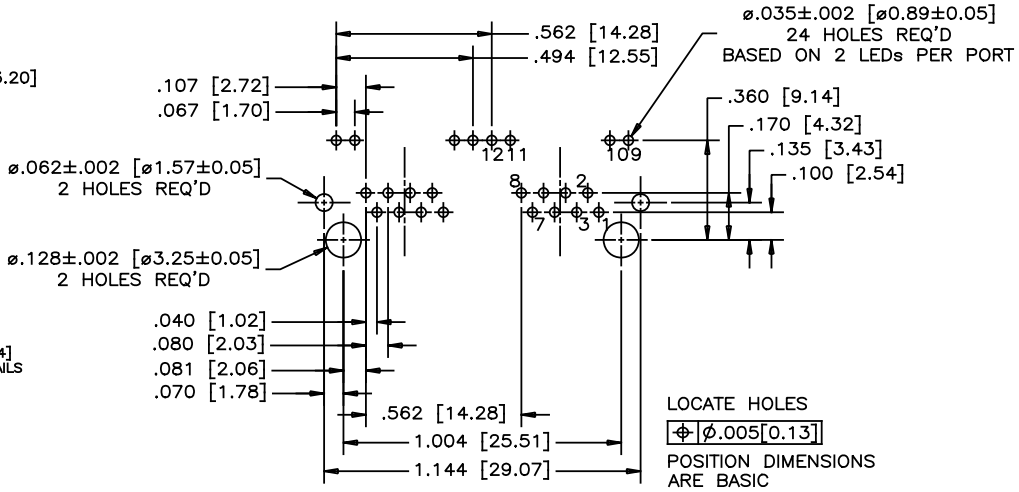


RECOMMENDED PCB LAYOUT

## Eight Port

### Shielded

**RJE39-888-1XX0**

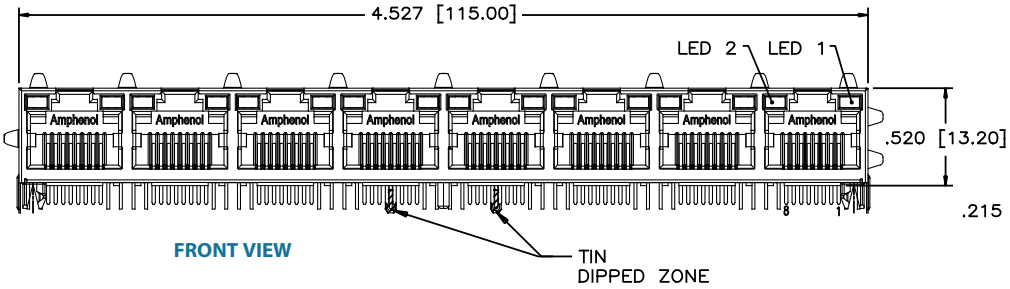


FRONT VIEW

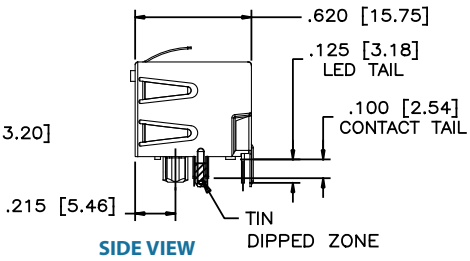


SIDE VIEW

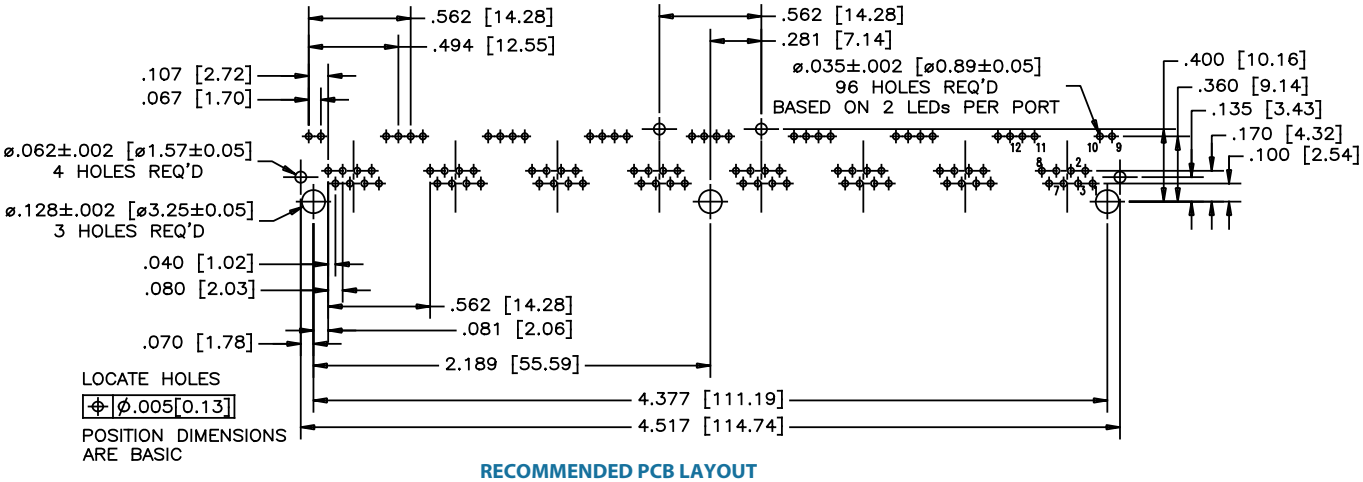


RECOMMENDED PCB LAYOUT


Amphenol Commercial Products - Amphenol Canada Corp. | Telephone: (416) 291-4401 | Fax: (416) 754-8668 | Email: sales@amphenolcanada.com
All specifications are subject to change without notice. Catalogue is updated regularly. Please refer to www.amphenolcanada.com for the most recent edition.

# RJE01

TAB UP, RJ11 (SIX POSITION)

## TAB UP, RJ11 (SIX POSITION)

The RJE01 series of 6-position jacks are designed for superior EMI performance. The inverted connector provides shorter leads, eliminating the EMI antenna effect of the standard connector footprint. Typical performance improvement over their standard connector counterparts is 5-10 dB over the frequency range.

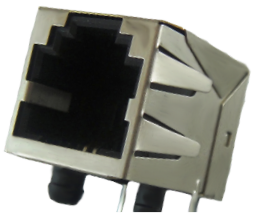

## SPECIFICATIONS

### Material

| | |
|---|---|
| **Insulator:** | High temp. thermoplastic; Complies with UL 94V-0; Black |
| **Contacts:** | Phosphor bronze hard temper with gold thickness options (6µ", 15µ", 30µ", 50µ") over 50µ" min. nickel on contact mating area; 100µ" min. matte tin plating on soldering tail |
| **Shield:** | Stainless steel with tin dipped tails |

### Electrical

| | |
|---|---|
| **Contact Resistance:** | 20 mΩ max. |
| **Insulation resistance:** | 500 MΩ min. at 500V DC for 2 mins max. |
| **Current Rating:** | 1.5 Amps per contact |
| **Voltage Rating:** | 125 Volts AC |
| **DWV:** | 1000 VAC, 60 Hz. 1 min. |

### Mechanical

| | |
|---|---|
| **Insertion Force:** | 5 lbs max. |
| **Pull Retention Force:** | 20 lbs min. |
| **Durability:** | 750 mating & unmating cycles |
| **Recommended Soldering Temperature:** | Wave soldering peaked at 260°C for 5 secs max. |
| **Operating Temperature:** | -55°C to + 85°C |
| **UL File #:** | E135615 |
| **CSA File #:** | LR685398 |

## ORDERING INFORMATION

RJE01 - X X X - XX

**Contact Plating**
- 1 - 6µ" gold plating
- G -15µ" gold plating
- J - 30µ" gold plating
- 6 - 50µ" gold plating

**Number of Contacts**
- 2 - 2 Contacts
- 4 - 4 Contacts
- 6 - 6 Contacts

**Number of Ports**
- 01 - 1 Port
- 02 - 2 Port

**Shield Options**
- 0 - No Shield
- 1 - Shield with top and side EMI tabs
- 2 - Shield with side & PCB tails
- 4 - Shield without tabs & PCB tails
- 5 - Shield without tabs, with rear PCB tails

**Didn't find what you were looking for?**
Please contact sales@amphenolcanada.com and let us know what you need.

Click to Return to Table of Contents

# RJE01

TAB UP, RJ11 (SIX POSITION)

## Single Port

### Non-Shielded

**RJE01-X60-01**

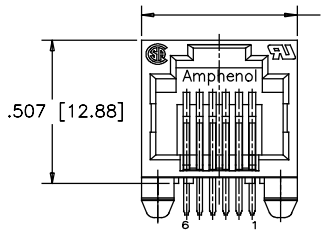


FRONT VIEW

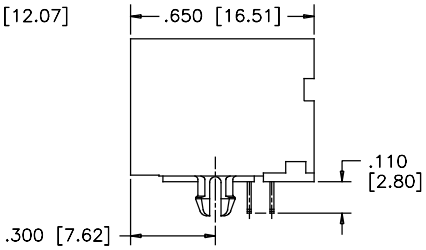


SIDE VIEW

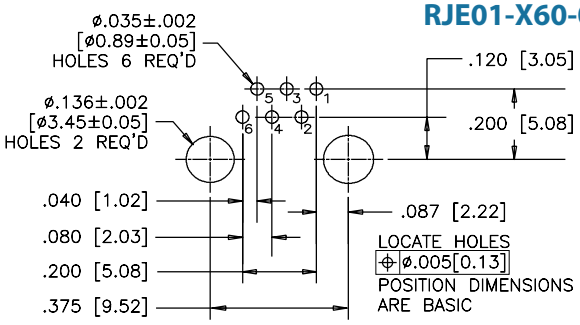


RECOMMENDED PCB LAYOUT

### Shielded

**RJE01-X62-01**

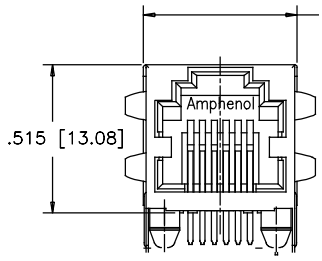


FRONT VIEW

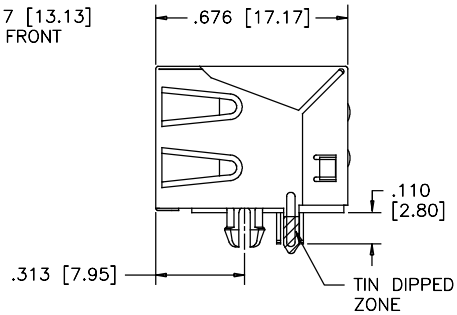


SIDE VIEW

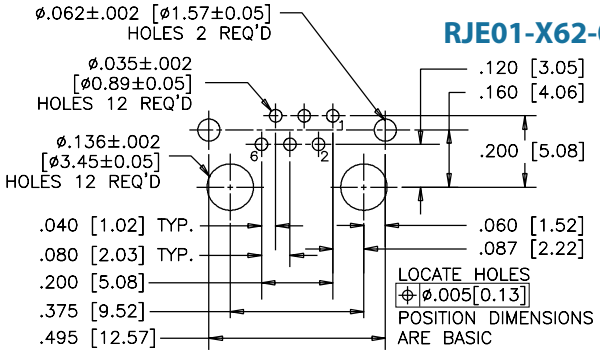


RECOMMENDED PCB LAYOUT

## Multi Port

### Non-Shielded

**RJE01-X60-02**

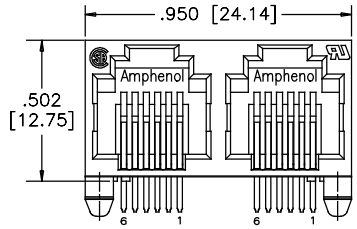


FRONT VIEW

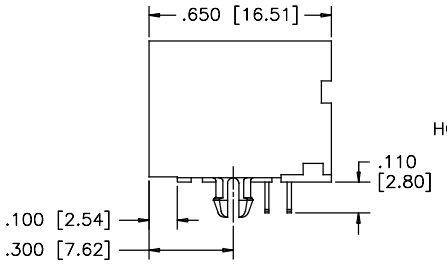


SIDE VIEW

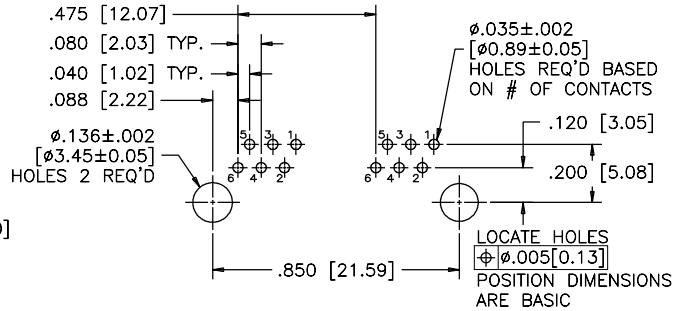


RECOMMENDED PCB LAYOUT

### Shielded

**RJE01-X62-02**

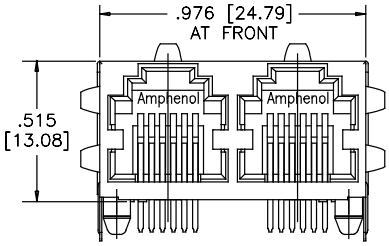


FRONT VIEW

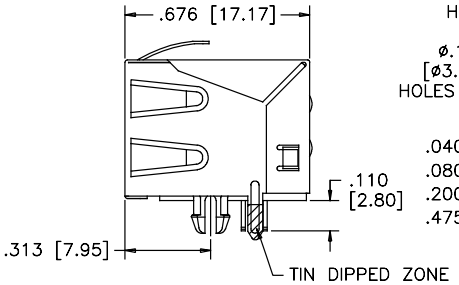


SIDE VIEW

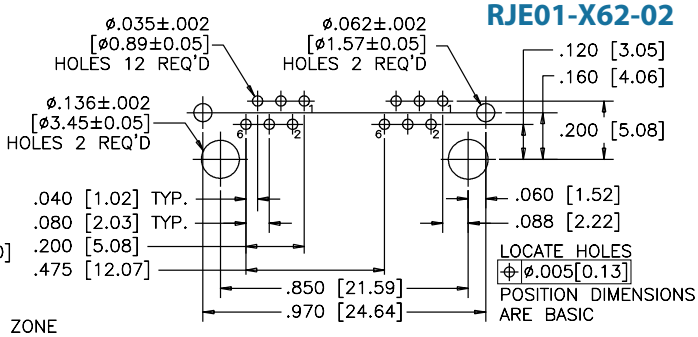


RECOMMENDED PCB LAYOUT


Amphenol Commercial Products - Amphenol Canada Corp. | Telephone: (416) 291-4401 | Fax: (416) 754-8668 | Email: sales@amphenolcanada.com
All specifications are subject to change without notice. Catalogue is updated regularly. Please refer to www.amphenolcanada.com for the most recent edition.

# RJSBE

TAB DOWN, 1, 2 AND 4 PORT WITH LEDs

## TAB DOWN, 1, 2 AND 4 PORT WITH LEDs

The RJSBE series of modular jacks supports Ethernet Protocols. Shielding is available with or without a ferrite filter for increased EMI performance and LEDs for link activity and network speed verification.

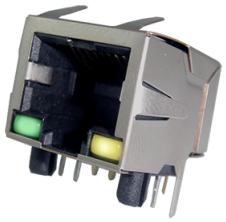

## SPECIFICATIONS

### Material

| | |
|---|---|
| **Insulator:** | High temp. thermoplastic;<br>Complies with UL 94V-0; Black |
| **Contacts:** | Phosphor bronze hard temper with gold thickness options (6µ", 15µ", 30µ", 50µ") over 50µ" min. nickel on contact mating area; 100µ" min. matte tin plating on soldering tail |
| **Shield:** | Copper alloy; nickel plated with tin dipped tails |
| **LED:** | Tin plating on LED tails |

### Mechanical

| | |
|---|---|
| **Insertion Force:** | 5 lbs max. |
| **Pull Retention Force:** | 20 lbs min. |
| **Durability:** | 750 mating & unmating cycles |
| **Recommended Soldering Temperature:** | Wave soldering peaked at 260°C for 5 secs max. |
| **Operating Temperature:** | -55°C to + 85°C |
| **UL File #:** | E135615 |
| **CSA File #:** | LR685398 |

*Note: Connectors without LEDs are suitable for IR Reflow*

### Electrical

| | |
|---|---|
| **Contact Resistance:** | 20 mΩ max. |
| **Insulation resistance:** | 500 MΩ min. at 500V DC for 2 mins max. |
| **Current Rating:** | 1.5 Amps per contact |
| **Voltage Rating:** | 125 Volts AC |
| **DWV:** | 1000 VAC, 60 Hz. 1 min. |
| **LED Forward DC Current:** | 20mA typical |
| **LED Forward Voltage:** | 1.9 Volts max. at 2mA (for single colours)<br>2.6 Volts max. at 2mA (for bicolours) |
| **LED Reverse Voltage:** | 5 Volts min. |
| **LED Light Intensity:** | 0.4 to 1.5 mcd min. at 2mA (for single colours)<br>0.5 mcd min. at 2mA (for bicolours) |
| **LED Wave Length:** | Yellow: 587 ± 7 nm measured at 20mA<br>Green: 565 ± 6 nm measured at 20mA<br>Red: 625 ± 5 nm measured at 20mA |

## ORDERING INFORMATION

RJSBE - X X X X - C X

**Version**
- 5 - 8 Positions, 50µ" gold plating
- 7 - 6 Positions, 50µ" gold plating
- D - 8 Positions, 6µ" gold plating
- G - 8 Positions, 15µ" gold plating
- J - 8 Positions, 30µ" gold plating

**Shield Options**
- 0 - No shield
- 2 - Shield with top and side tabs, filtered
- 3 - Shield with top and side tabs, no filter
- F - Shield with no tabs, no filter

**Number of Ports**
- Blank - 1 Port
- 02 - 2 Ports
- 04 - 4 Ports

**LED Options**
- Click to view page 3 for options

**Number of Contacts**
- 4 - 4 Contacts
- 6 - 6 Contacts
- 8 - 8 Contacts

**Didn't find what you were looking for?**
Please contact sales@amphenolcanada.com and let us know what you need.

Click to Return to Table of Contents

# RJSBE

TAB DOWN, 1, 2 AND 4 PORT WITH LEDs

## Single Port

**RJSBE-508X-C1**

### Non-Shielded

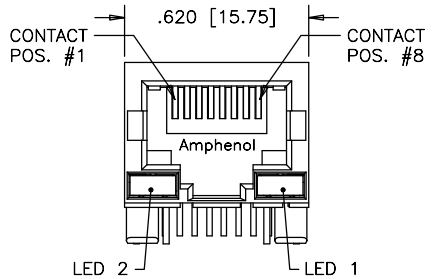


FRONT VIEW

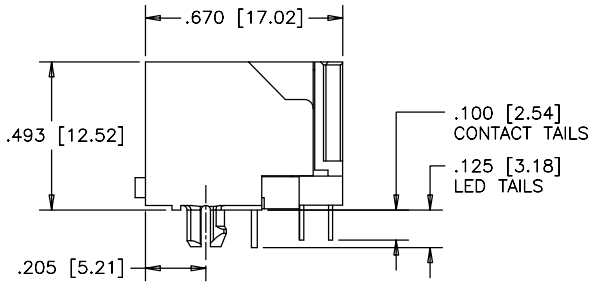


SIDE VIEW

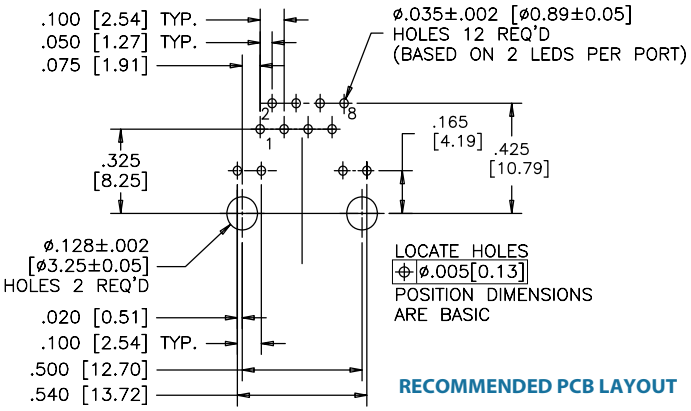


RECOMMENDED PCB LAYOUT

## Shielded

**RJSBE-538X-C1**

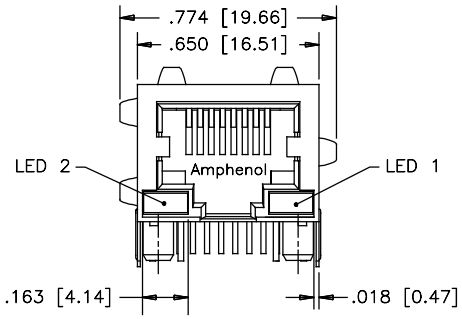


FRONT VIEW

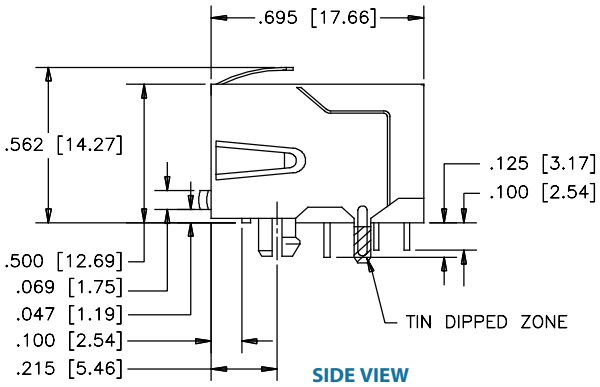


SIDE VIEW

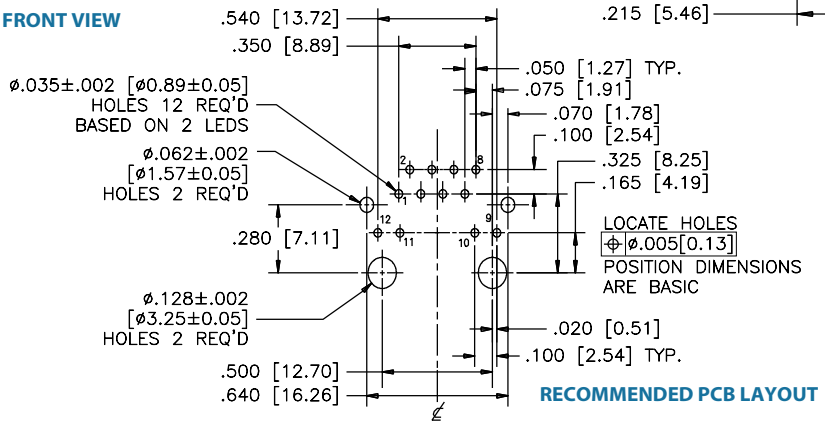


RECOMMENDED PCB LAYOUT


Amphenol Commercial Products - Amphenol Canada Corp. | Telephone: (416) 291-4401 | Fax: (416) 754-8668 | Email: sales@amphenolcanada.com
All specifications are subject to change without notice. Catalogue is updated regularly. Please refer to www.amphenolcanada.com for the most recent edition.

# RJSBE

TAB DOWN, 1, 2 AND 4 PORT WITH LEDs

## Multi Port

### Non-Shielded

**RJSBE-508X-C4**

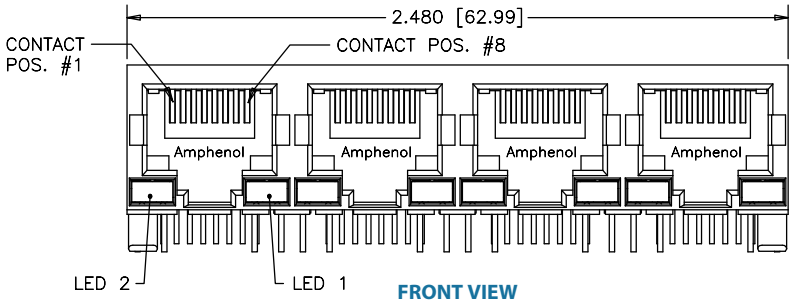


FRONT VIEW

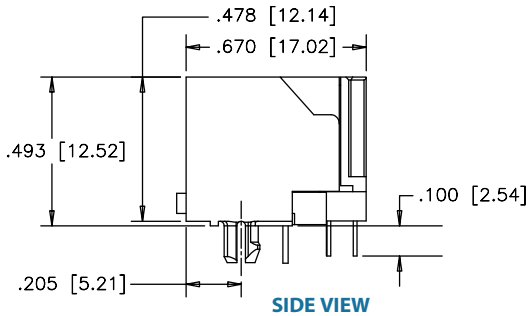


SIDE VIEW

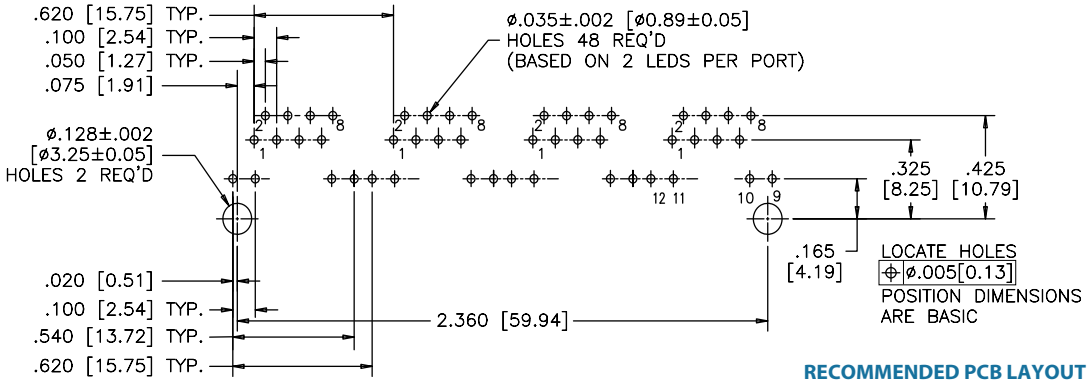


RECOMMENDED PCB LAYOUT

## Multi Port

### Shielded

**RJSBE-538X-C4**

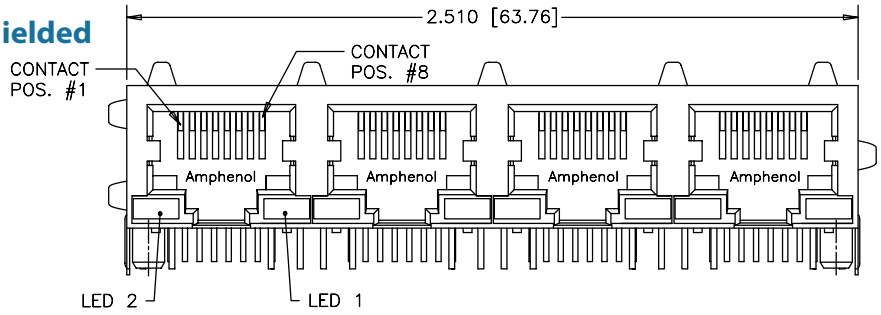


FRONT VIEW

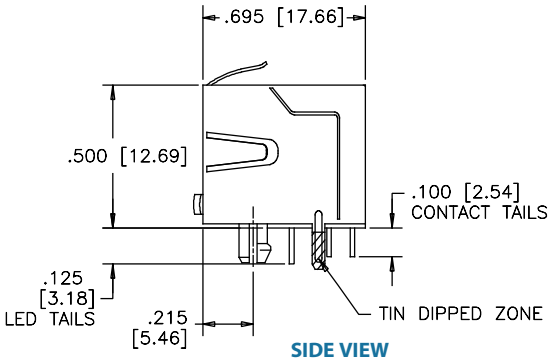


SIDE VIEW

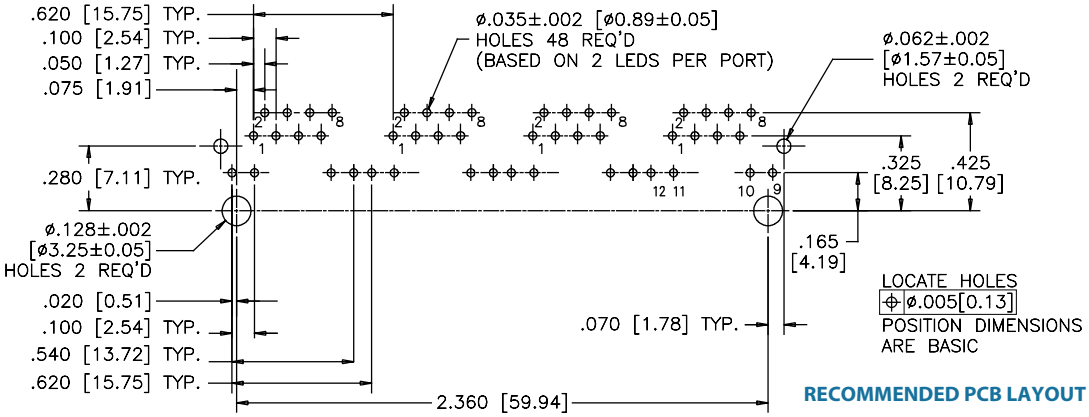


RECOMMENDED PCB LAYOUT

# FRJAE

TAB DOWN, FILTERED AND SHIELDED

## TAB DOWN, FILTERED AND SHIELDED

The FRJAE series of shielded and filtered modular jacks offer low cost and effective EMC control within standard RJ11 & RJ45 connector footprints. EMC control is offered by a completely shielded connector and/or with the use of a high resistivity, high impedance ferrite filter. No board layout changes are required for its use. Simply replace the standard non-filtered connector for superior EMC performance.

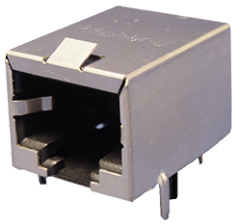

## SPECIFICATIONS

### Material

| | |
|---|---|
| **Insulator:** | High temp. thermoplastic; Complies with UL 94V-0; Black |
| **Contacts:** | Phosphor bronze hard temper with gold thickness options (6µ", 15µ", 30µ", 50µ") over 50µ" min. nickel on contact mating area; 100µ" min. matte tin plating on soldering tail |
| **Shield:** | Copper alloy; nickel plated with tin dipped tails |
| **Filter:** | High impedance, high resistivity ferrite filter |

### IMPEDANCE CHARACTERISTICS

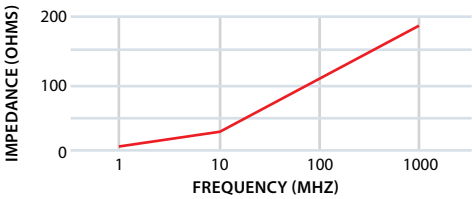


### Electrical

| | |
|---|---|
| **Contact Resistance:** | 20 mΩ max. |
| **Insulation resistance:** | 500 MΩ min. at 500V DC for 2 mins max. |
| **Current Rating:** | 1.5 Amps per contact |
| **Voltage Rating:** | 125 Volts AC |
| **DWV:** | 1000 VAC, 60 Hz. 1 min. |

### Mechanical

| | |
|---|---|
| **Insertion Force:** | 5 lbs max. |
| **Pull Retention Force:** | 20 lbs min. |
| **Durability:** | 750 mating & unmating cycles |
| **Recommended Soldering Temperature:** | Wave soldering peaked at 260°C for 5 secs max. |
| **Operating Temperature:** | -55°C to + 85°C |
| **UL File #:** | E135615 |
| **CSA File #:** | LR68598 |

## ORDERING INFORMATION

**FRJAE - X X X - XX**

**Version**
- 4 - 8 Positions
- 6 - 6 Positions

**Shield Options**
- 0 - Non-filtered without shield
- 1 - Filtered with front tab shield
- 3 - Non-filtered with front tab shield
- 4 - Filtered without shield
- 6 - Filtered with rear tab shield
- 7 - Filtered without PCB tails shield
- 8 - Non-filtered with rear tab shield

**Number of Ports**
- Blank - 1 Port
- 02 - 2 Ports
- 04 - 4 Ports
- 06 - 6 Ports
- 08 - 8 Ports

**Number of Contacts**
- 2 - 2 Contacts
- 4 - 4 Contacts
- 6 - 6 Contacts
- 8 - 8 Contacts

**Didn't find what you were looking for?**
Please contact sales@amphenolcanada.com and let us know what you need.

Click to Return to Table of Contents


Amphenol Commercial Products - Amphenol Canada Corp. | Telephone: (416) 291-4401 | Fax: (416) 754-8668 | Email: sales@amphenolcanada.com
All specifications are subject to change without notice. Catalogue is updated regularly. Please refer to www.amphenolcanada.com for the most recent edition.

# FRJAE

TAB DOWN, FILTERED AND SHIELDED

## Single Port

### Non-Shielded

**FRJAE-A408**

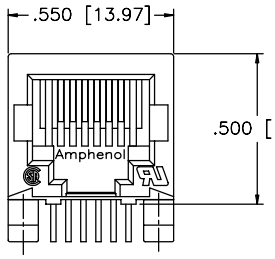


FRONT VIEW

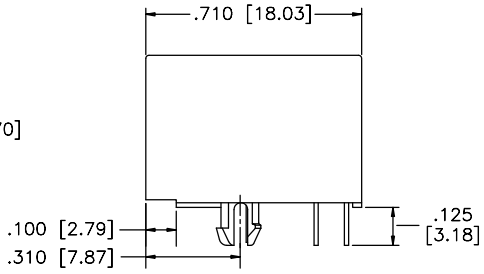


SIDE VIEW

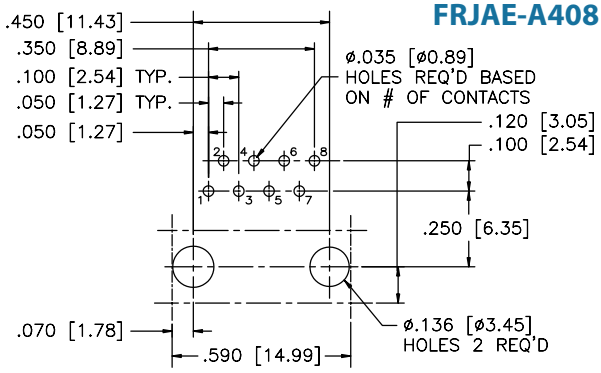


RECOMMENDED PCB LAYOUT

### Shielded

**FRJAE-438**

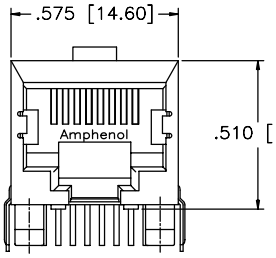


FRONT VIEW

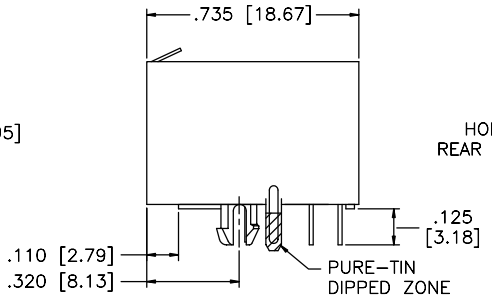


SIDE VIEW

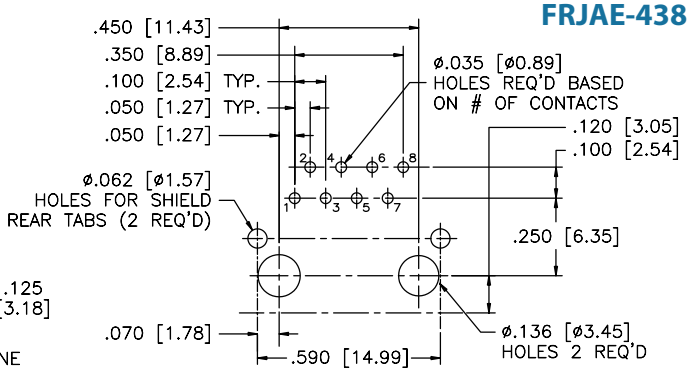


RECOMMENDED PCB LAYOUT

## Multi Port

### Non-Shielded

**FRJAE-4X8-0X**

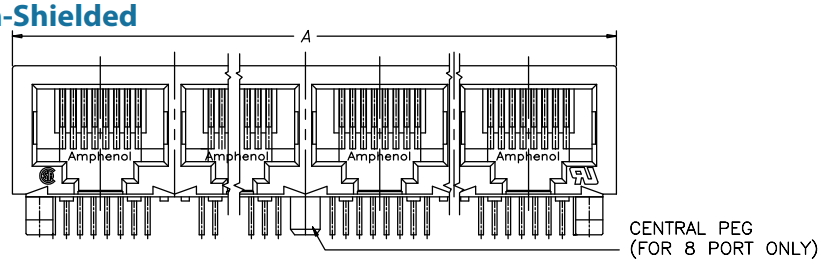


FRONT VIEW

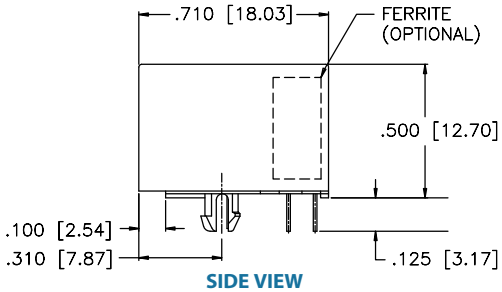


SIDE VIEW

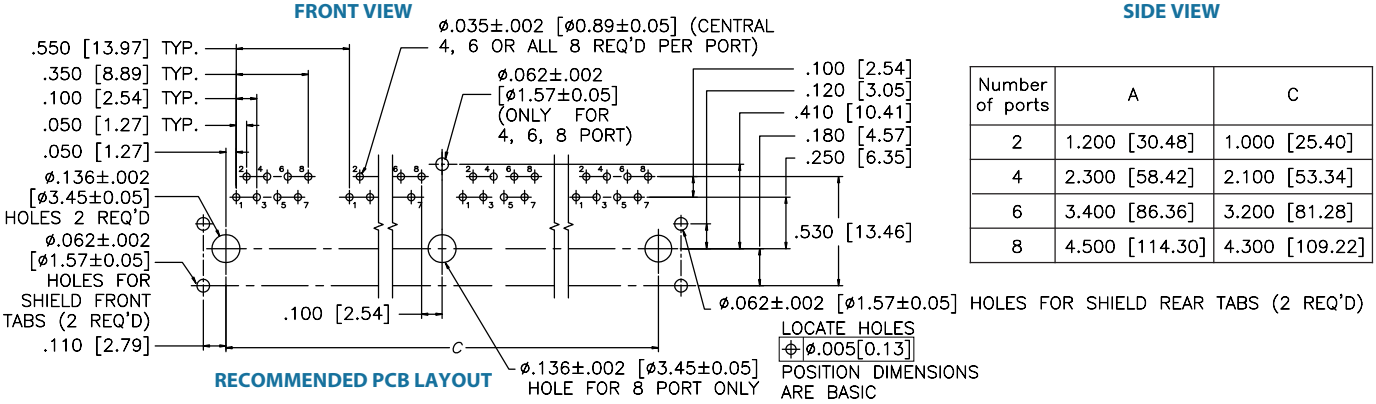


RECOMMENDED PCB LAYOUT

| Number of ports | A | C |
|---|---|---|
| 2 | 1.200 [30.48] | 1.000 [25.40] |
| 4 | 2.300 [58.42] | 2.100 [53.34] |
| 6 | 3.400 [86.36] | 3.200 [81.28] |
| 8 | 4.500 [114.30] | 4.300 [109.22] |

# FRJAE

TAB DOWN, FILTERED AND SHIELDED

## Multi Port

**FRJAE-418-0X**

### Shielded

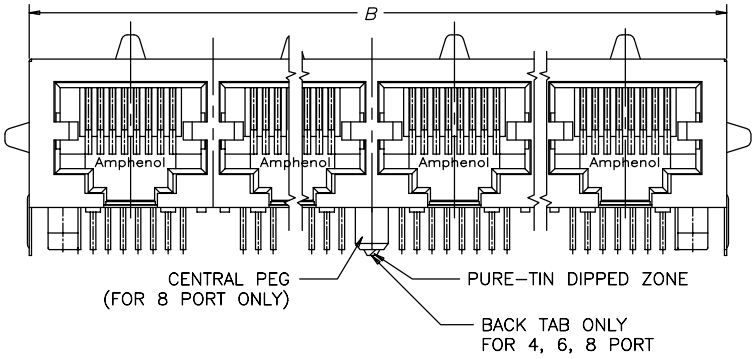


FRONT VIEW

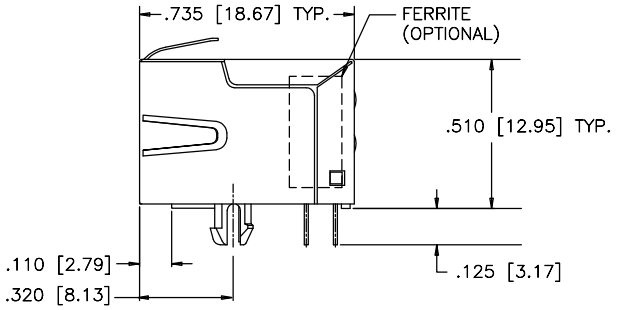


SIDE VIEW

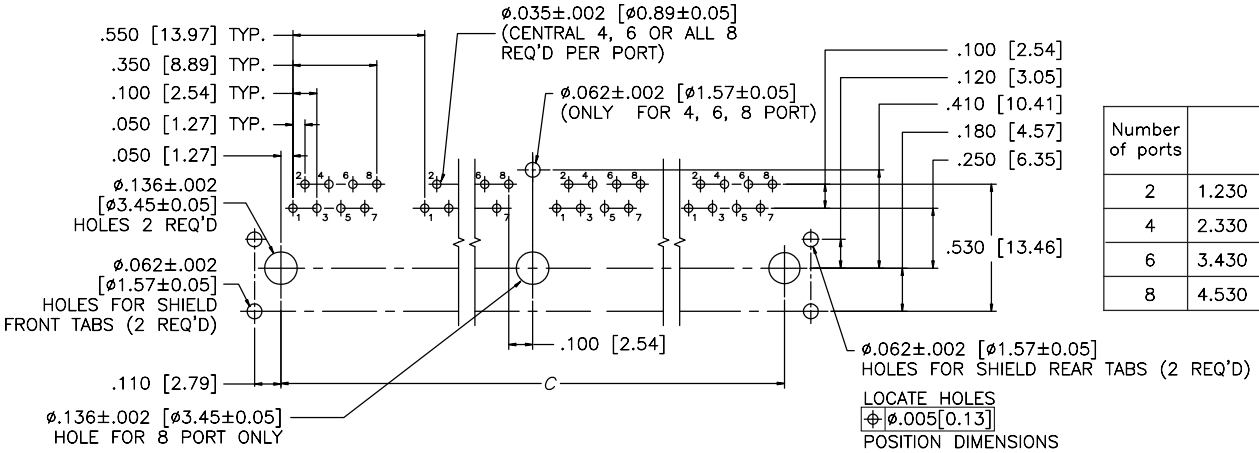


RECOMMENDED PCB LAYOUT

| Number of ports | B | C |
|---|---|---|
| 2 | 1.230 [31.24] | 1.000 [25.40] |
| 4 | 2.330 [59.18] | 2.100 [53.34] |
| 6 | 3.430 [87.12] | 3.200 [81.28] |
| 8 | 4.530 [115.06] | 4.300 [109.22] |

### *Notes*


**Amphenol Commercial Products - Amphenol Canada Corp.** | **Telephone: (416) 291-4401** | **Fax: (416) 754-8668** | **Email:** sales@amphenolcanada.com
All specifications are subject to change without notice. Catalogue is updated regularly. Please refer to www.amphenolcanada.com for the most recent edition.

# RJE02

TAB DOWN, SINGLE PORT, HIGH PROFILE

## TAB DOWN, SINGLE PORT, HIGH PROFILE

RJE02 series is a group of products within a family of standard modular jacks designed to meet requirements for a variety of applications options within the RJE02 family include options with and without a panel stops, and RJ11 & RJ45 configurations.

## SPECIFICATIONS

### Material

| | |
|---|---|
| **Insulator:** | High temp. thermoplastic; Complies with UL 94V-0; Black |
| **Contacts:** | Phosphor bronze hard temper with gold thickness options (6µ", 15µ", 30µ", 50µ") over 50µ" min. nickel on contact mating area; 100µ" min. matte tin plating on soldering tail |
| **Shield:** | Copper alloy; nickel plated with tin dipped tail |

### Electrical

| | |
|---|---|
| **Contact Resistance:** | 20 mΩ max. |
| **Insulation resistance:** | 500 MΩ min. at 500V DC for 2 mins max. |
| **Current Rating:** | 1.5 Amps per contact |
| **Voltage Rating:** | 125 Volts AC |
| **DWV:** | 1500 VAC, 60 Hz. 1 min. |

### Mechanical

| | |
|---|---|
| **Insertion Force:** | 5 lbs max. |
| **Pull Retention Force:** | 20 lbs min. |
| **Durability:** | 750 mating & unmating cycles |
| **Recommended Soldering Temperature:** | Wave soldering peaked at 260°C for 5 secs max. |
| **Operating Temperature:** | - 40°C to + 85°C |
| **UL File Number:** | E136228 |

*Note: Connectors with high temp. material are suitable for IR Reflow*

## ORDERING INFORMATION

**RJE02 - 1 X X - 0 X X 0**

**Number of Ports**
1 - 1 Port

**Number of Positions**
4 - 4 Positions
6 - 6 Positions
8 - 8 Positions

**Number of Contacts**
2 - 2 Contacts
4 - 4 Contacts
6 - 6 Contacts

**Modifier**
0 - Standard product

**Panel Stop Options**
1 - Without panel stop
2 - With panel stop

**Contact Plating**
1 - 6µ" gold plating
2 - 15µ" gold plating
3 - 30µ" gold plating
4 - 50µ" gold plating

**Shield Options**
0 - No Shield

**Didn't find what you were looking for?**
Please contact sales@amphenolcanada.com and let us know what you need.

Click to Return to Table of Contents

# RJE02

TAB DOWN, SINGLE PORT, HIGH PROFILE

## Single Port

**RJE02-1XX-0X20**

### Non-Shielded

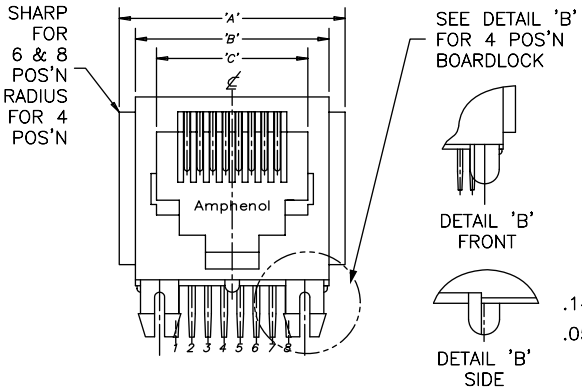


FRONT VIEW

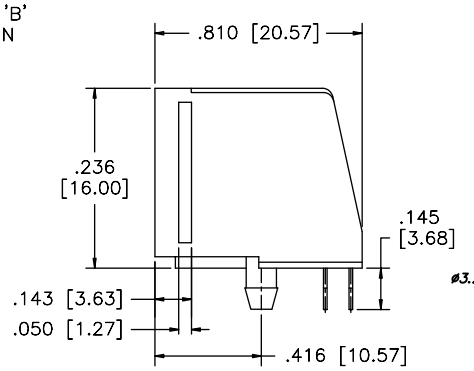


SIDE VIEW

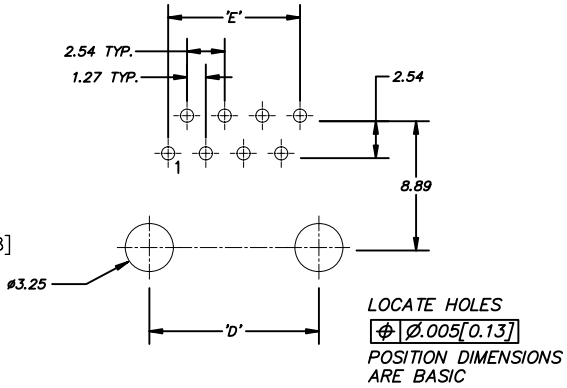


RECOMMENDED PCB LAYOUT

| Part # | No. of Positions | No. of Contacts | Dimensions | | | | |
|---|---|---|---|---|---|---|---|
| | | | A | B | C | D | E |
| RJE02–142–0X20 | 4 | 2 | .540 [13.72] | .440 [11.18] | .309 [7.85] | .300 [7.62] | .050 [1.27] |
| RJE02–144–0X20 | 4 | 4 | .540 [13.72] | .440 [11.18] | .309 [7.85] | .300 [7.62] | .150 [3.81] |
| RJE02–162–0X20 | 6 | 2 | .620 [15.75] | .520 [13.21] | .389 [9.88] | .400 [10.16] | .050 [1.27] |
| RJE02–164–0X20 | 6 | 4 | .620 [15.75] | .520 [13.21] | .389 [9.88] | .400 [10.16] | .150 [3.81] |
| RJE02–166–0X20 | 6 | 6 | .620 [15.75] | .520 [13.21] | .389 [9.88] | .400 [10.16] | .150 [3.81] |
| RJE02–188–0X20 | 8 | 8 | .700 [17.78] | .600 [15.24] | .469 [11.91] | .450 [11.43] | .350 [8.89] |

### *Notes*


**Amphenol Commercial Products - Amphenol Canada Corp.** | **Telephone: (416) 291-4401** | **Fax: (416) 754-8668** | **Email:** sales@amphenolcanada.com
All specifications are subject to change without notice. Catalogue is updated regularly. Please refer to www.amphenolcanada.com for the most recent edition.

# RJE03

TAB DOWN, SINGLE PORT, LOW PROFILE

## TAB DOWN, SINGLE PORT, LOW PROFILE

RE03 series is a group of products within a family of standard modular jacks designed to meet requirements for a variety of applications. Options within the RJE03 family include shielded and non-shielded, and RJ11 & RJ45 configurations.

## SPECIFICATIONS

### Material

| | |
|---|---|
| **Insulator:** | High temp. thermoplastic; Complies with UL 94V-0; Black |
| **Contacts:** | Phosphor bronze hard temper with gold thickness options (6µ", 15µ", 30µ", 50µ") over 50µ" min. nickel on contact mating area; 100µ" min. matte tin plating on soldering tail |
| **Shield:** | Copper alloy; nickel plated with tin dipped tail |

### Electrical

| | |
|---|---|
| **Contact Resistance:** | 20 mΩ max. |
| **Insulation resistance:** | 500 MΩ min. at 500V DC for 2 mins max. |
| **Current Rating:** | 1.5 Amps per contact |
| **Voltage Rating:** | 125 Volts AC |
| **DWV:** | 1000 VAC, 60 Hz. 1 min. |

### Mechanical

| | |
|---|---|
| **Insertion Force:** | 5 lbs max. |
| **Pull Retention Force:** | 20 lbs min. |
| **Durability:** | 750 mating & unmating cycles |
| **Recommended Soldering Temperature:** | Wave soldering peaked at 260°C for 5 secs max. |
| **Operating Temperature:** | - 40°C to + 85°C |
| **UL File Number:** | E136228 |

*Note: Connectors with high temp. material are suitable for IR Reflow*

## ORDERING INFORMATION

**RJE03 - 1 X X - X X X 0**

**Number of Ports**
1 - 1 Port

**Number of Positions**
4 - 4 Positions
6 - 6 Positions

**Number of Contacts**
2 - 2 Contacts
4 - 4 Contacts
6 - 6 Contacts
8 - 8 Contacts

**Shield Options**
0 - No Shield
2 - Partial shield (must have panel stop)

**Modifier**
0 - Standard product

**Panel Stop Options**
1 - Without panel stop
2 - With panel stop

**Contact Plating**
1 - 6µ" gold plating
2 - 15µ" gold plating
3 - 30µ" gold plating
4 - 50µ" gold plating

**Didn't find what you were looking for?**
Please contact sales@amphenolcanada.com and let us know what you need.

Click to Return to Table of Contents

# RJE03

TAB DOWN, SINGLE PORT, LOW PROFILE

## Single Port

### Non-Shielded

**RJE03-188-0X10**

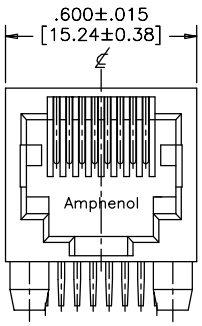


FRONT VIEW

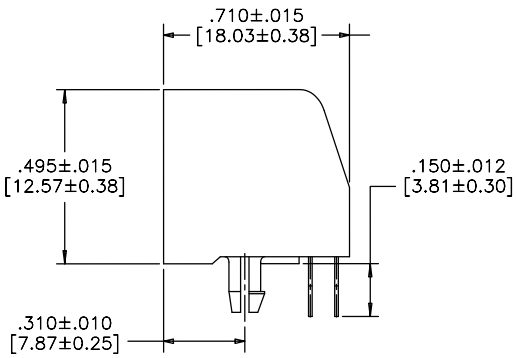


SIDE VIEW

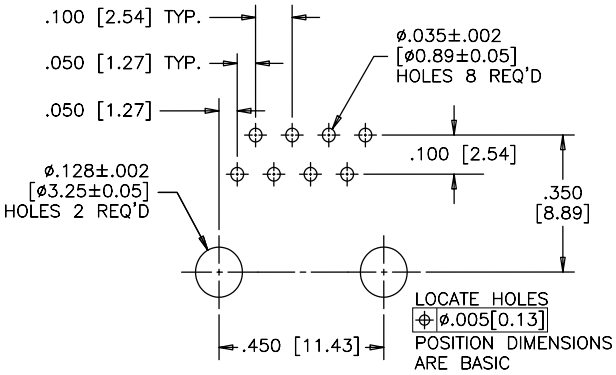


RECOMMENDED PCB LAYOUT

### Shielded with Panel Stop

**RJE03-188-2X20**

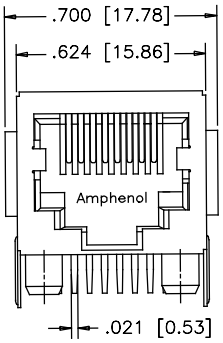


FRONT VIEW

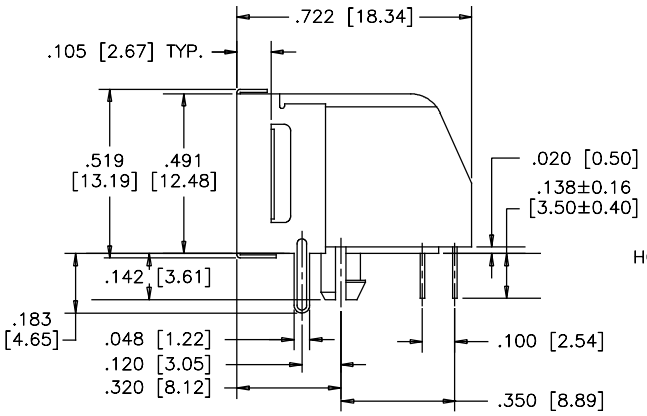


SIDE VIEW

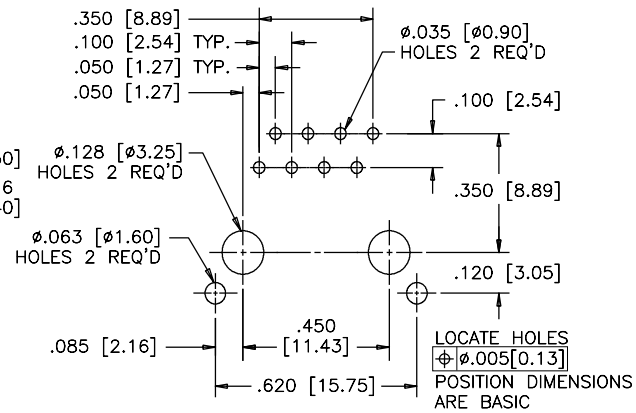


RECOMMENDED PCB LAYOUT

### *Notes*


**Amphenol Commercial Products - Amphenol Canada Corp.** | **Telephone: (416) 291-4401** | **Fax: (416) 754-8668** | **Email:** sales@amphenolcanada.com
All specifications are subject to change without notice. Catalogue is updated regularly. Please refer to www.amphenolcanada.com for the most recent edition.

# RJE05

TAB DOWN, ULTRA LOW PROFILE

## TAB DOWN, ULTRA LOW PROFILE

RJE05 series is a group of products within a family of standard modular jacks designed to meet requirements for a variety of applications. Options within the RJE05 family include shielded or non-shielded, and RJ11 & RJ45 configurations.

## SPECIFICATIONS

### Material

| | |
|---|---|
| **Insulator:** | High temp. thermoplastic; Complies with UL 94V-0; Black |
| **Contacts:** | Phosphor bronze hard temper with gold thickness options (6µ", 15µ", 30µ", 50µ") over 50µ" min. nickel on contact mating area; 100µ" min. matte tin plating on soldering tail |
| **Shield:** | Copper alloy; nickel plated with tin dipped tail |

### Electrical

| | |
|---|---|
| **Contact Resistance:** | 20 mΩ max. |
| **Insulation resistance:** | 500 MΩ min. at 500V DC for 2 mins max. |
| **Current Rating:** | 1.5 Amps per contact |
| **Voltage Rating:** | 125 Volts AC |
| **DWV:** | 1000 VAC, 60 Hz. 1 min. |

### Mechanical

| | |
|---|---|
| **Insertion Force:** | 5 lbs max. |
| **Pull Retention Force:** | 20 lbs min. |
| **Durability:** | 750 mating & unmating cycles |
| **Recommended Soldering Temperature:** | Wave soldering peaked at 260°C for 5 secs max. |
| **Operating Temperature:** | - 40°C to + 85°C |
| **UL File #:** | E135615 |

*Note: Connectors with high temp material are suitable for IR Reflow*

## ORDERING INFORMATION

**RJE05 - 1 X X - X X 1 0**

**Number of Ports**
1 - 1 Port

**Number of Positions**
4 - 4 Positions
6 - 6 Positions
8 - 8 Positions
A - 10 Positions

**Number of Contacts**
2 - 2 Contacts
4 - 4 Contacts
6 - 6 Contacts
8 - 8 Contacts
A - 10 Contacts

**Modifier**
0 - Standard product

**Panel Stop Options**
1 - No panel stop

**Contact Plating**
1 - 6µ" gold plating
2 - 15µ" gold plating
3 - 30µ" gold plating
4 - 50µ" gold plating

**Shield Options**
0 - No shield
1 - Shield with front PCB tabs, no top or side tabs
5 - Shield with top, side, and front PCB tabs
8 - Shield with rear PCB tabs, no top or side tabs

**Didn't find what you were looking for?**
Please contact sales@amphenolcanada.com and let us know what you need.

Click to Return to Table of Contents

# RJE05

TAB DOWN, ULTRA LOW PROFILE

## Single Port

### Non-Shielded

**RJE05-188-0X10**

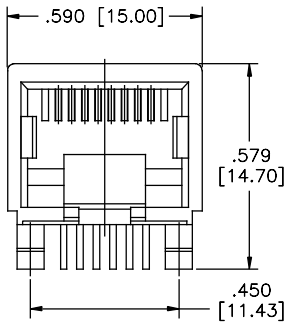


FRONT VIEW

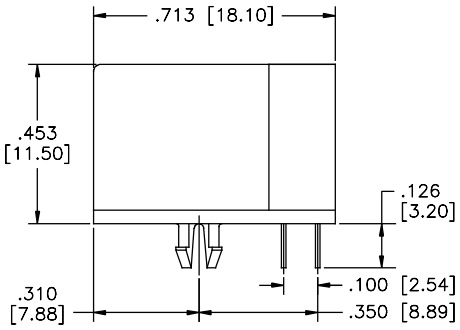


SIDE VIEW

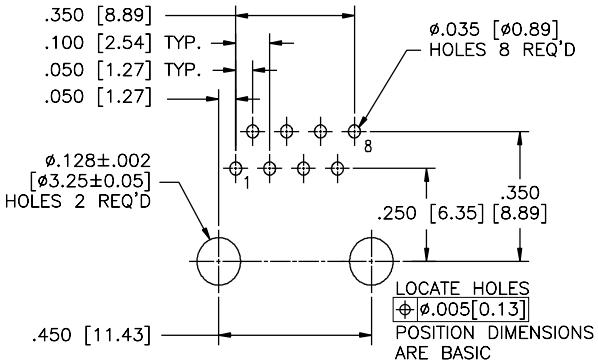


RECOMMENDED PCB LAYOUT

### Shielded with Front PCB Tabs

**RJE05-188-1X10**

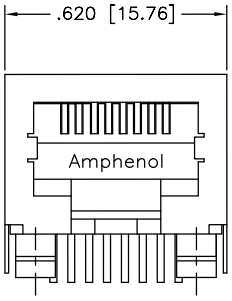


FRONT VIEW

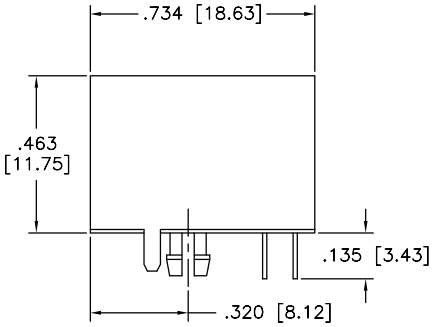


SIDE VIEW

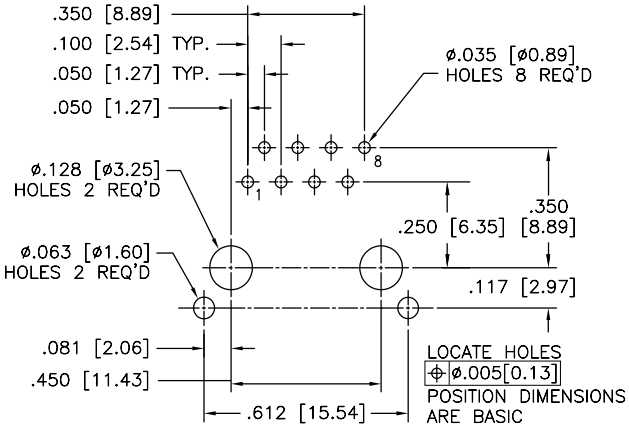


RECOMMENDED PCB LAYOUT

### Shielded with Top, Side, and Front PCB Tabs

**RJE05-188-5X10**

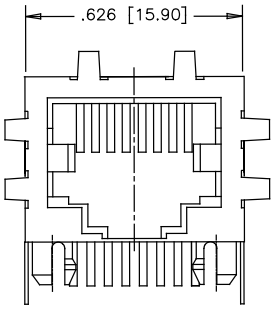


FRONT VIEW

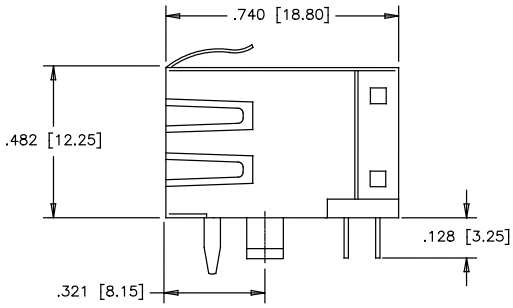


SIDE VIEW

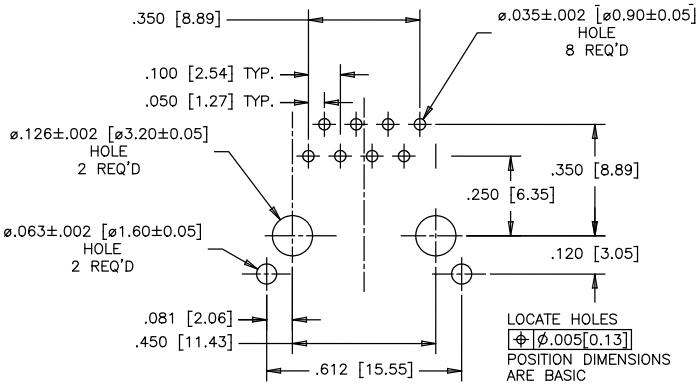


RECOMMENDED PCB LAYOUT


Amphenol Commercial Products - Amphenol Canada Corp. | Telephone: (416) 291-4401 | Fax: (416) 754-8668 | Email: sales@amphenolcanada.com
All specifications are subject to change without notice. Catalogue is updated regularly. Please refer to www.amphenolcanada.com for the most recent edition.

# RJE09

TAB DOWN, STANDARD PROFILE

## TAB DOWN, STANDARD PROFILE

RJE09 series is a group of products within a family of standard modular jacks designed to meet requirements for a variety of applications. Options with the RJE09 family include shielded & non-shielded, and RJ11 & RJ45.

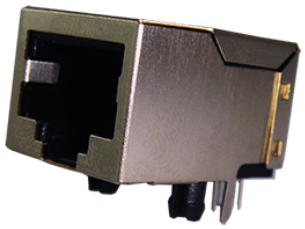

## SPECIFICATIONS

### Material

| | |
|---|---|
| **Insulator:** | High temp. thermoplastic; Complies with UL 94V-0; Black |
| **Contacts:** | Phosphor bronze hard temper with gold thickness options (6µ", 15µ", 30µ", 50µ") over 50µ" min. nickel on contact mating area; 100µ" min. matte tin or gold flash plating on soldering tail |
| **Shield:** | Copper alloy; nickel plated allover |

### Electrical

| | |
|---|---|
| **Contact Resistance:** | 20 mΩ max. |
| **Insulation resistance:** | 500 MΩ min. at 500V DC for 2 mins max. |
| **Current Rating:** | 1.5 Amps per contact |
| **Voltage Rating:** | 125 Volts AC |
| **DWV:** | 1000 VAC, 60 Hz. 1 min. |

### Mechanical

| | |
|---|---|
| **Insertion Force:** | 5 lbs max. |
| **Pull Retention Force:** | 20 lbs min. |
| **Durability:** | 750 mating & unmating cycles |
| **Recommended Soldering Temperature:** | Wave soldering peaked at 260°C for 5 to 8 secs max. |
| **Operating Temperature:** | - 40°C to + 70°C |
| **UL File #:** | E136228 |

## ORDERING INFORMATION

RJE09 - X X X - X X X 0

**Number of Ports**
- 1 -1 Port
- 2 - 2 Ports
- 4 - 4 Ports
- 6 - 6 Ports
- 8 - 8 Ports

**Number of Positions**
- 6 - 6 Positions
- 8 - 8 Positions
- A - 10 Positions

**Number of Contacts**
- 4 - 4 Contacts
- 6 - 6 Contacts
- 8 - 8 Contacts
- A - 10 Contacts

**Modifier**
- 0 - Standard product

**Panel Stop Options**
- 1 - No panel stop
- 2 - With panel stop

**Contact Plating**
- 1 - 6µ" gold plating
- 2 - 15µ" gold plating
- 3 - 30µ" gold plating
- 4 - 50µ" gold plating

**Shield Options**
- 0 - No shield
- 1 - Shield with rear PCB tabs, no top or side tabs
- 5 - Shield with top, side, and front PCB tabs
- 8 - Shield with front PCB tabs, no top or side tabs

**Didn't find what you were looking for?**
Please contact sales@amphenolcanada.com and let us know what you need.

Click to Return to Table of Contents

# RJE09

TAB DOWN, STANDARD PROFILE

## Single Port

### Non-Shielded

**RJE09-1AA-0X10**

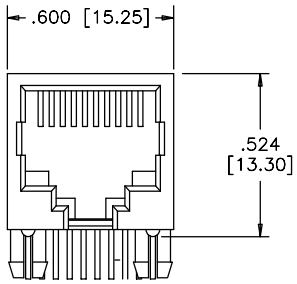


FRONT VIEW

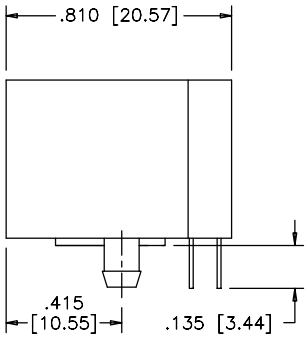


SIDE VIEW

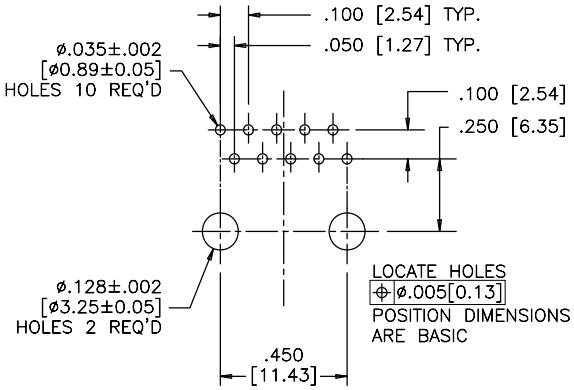


RECOMMENDED PCB LAYOUT

### Shielded

**RJE09-188-1X10**

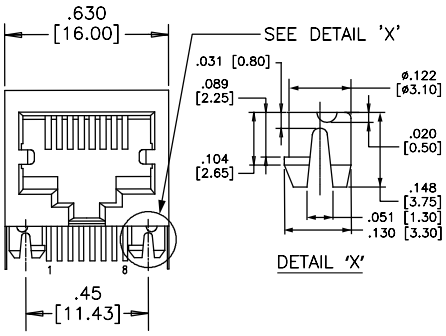


FRONT VIEW

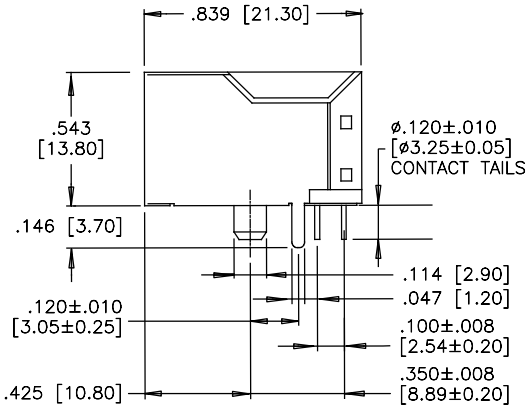


SIDE VIEW

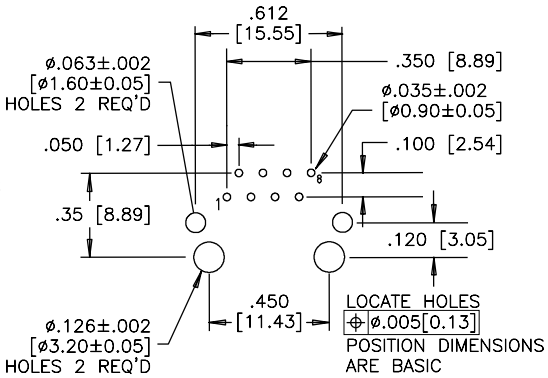


RECOMMENDED PCB LAYOUT

### Shielded

**RJE09-188-5X10**

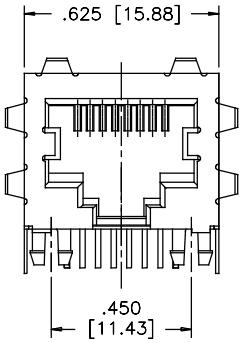


FRONT VIEW

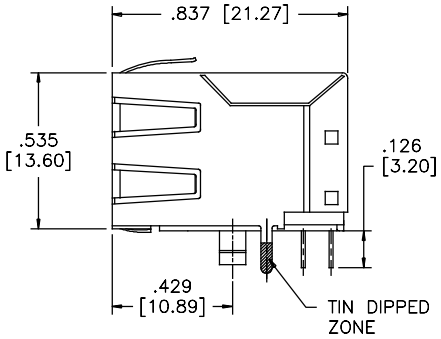


SIDE VIEW

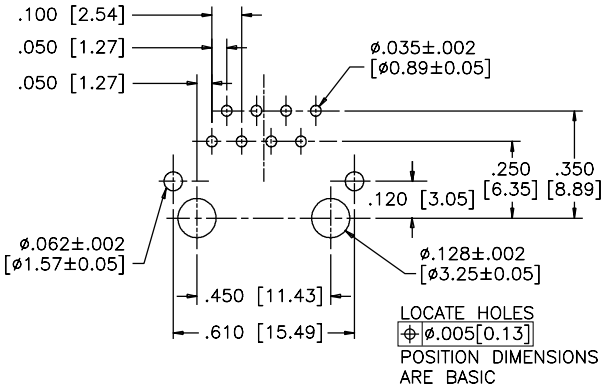


RECOMMENDED PCB LAYOUT


Amphenol Commercial Products - Amphenol Canada Corp. | Telephone: (416) 291-4401 | Fax: (416) 754-8668 | Email: sales@amphenolcanada.com
All specifications are subject to change without notice. Catalogue is updated regularly. Please refer to www.amphenolcanada.com for the most recent edition.

# RJE09

TAB DOWN, STANDARD PROFILE

## Multi Port

### Non-Shielded

**RJE09-288-0X10**

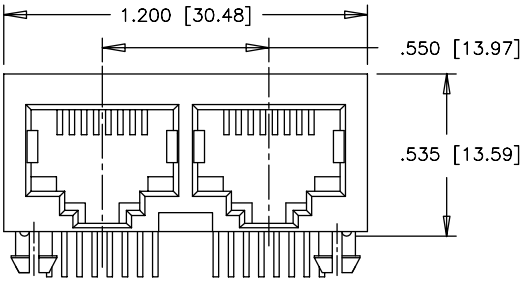


FRONT VIEW

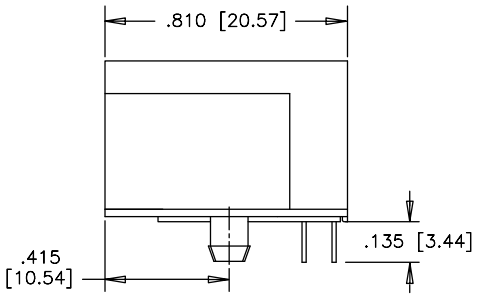


SIDE VIEW

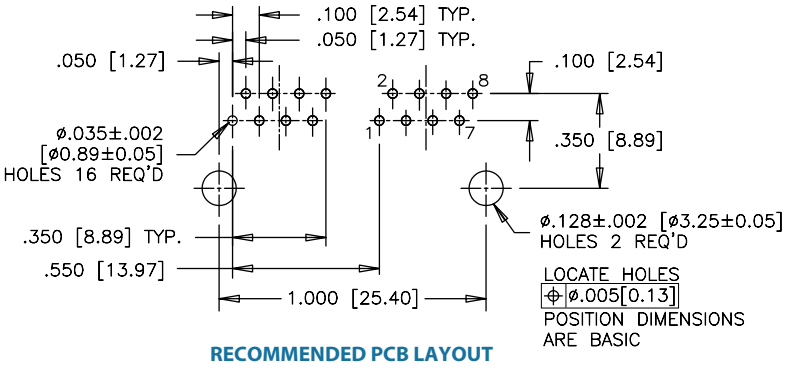


RECOMMENDED PCB LAYOUT

### Shielded

**RJE09-888-1X10**

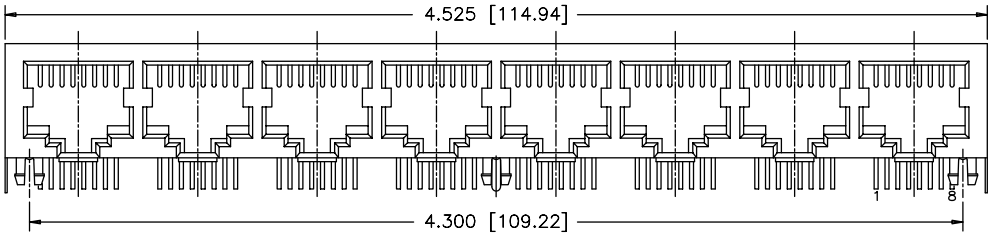


FRONT VIEW

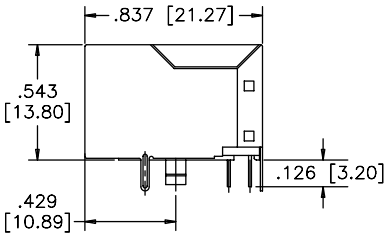


SIDE VIEW

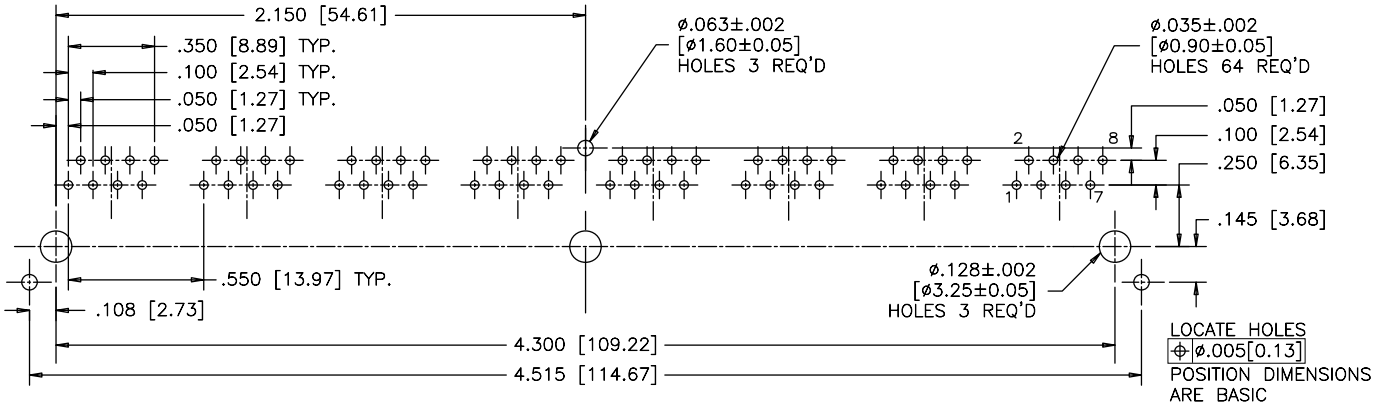


RECOMMENDED PCB LAYOUT

# RJULE

TAB DOWN, RECESSED, LOW PROFILE

## TAB DOWN, RECESSED, LOW PROFILE

RJULE is a series of single port RJ45 modular jacks designed for slim profile applications. With a profile height of less than 10 millimeters, this connector is perfect where vertical space is limited. Standard and rear mount shield options for superior EMI performance makes this part ideal for LAN and router applications.

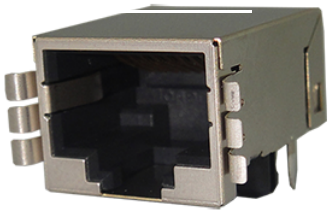

## SPECIFICATIONS

### Material

| | |
|---|---|
| **Housing:** | High temp. thermoplastic; Flammability rating UL94-0; RoSH compliant |
| **Contacts:** | Phosphor bronze |
| **Plating:** | Gold plated on mating surfaces over 50µ" (1.27 microns) min. nickel under plate; 100µ" (2.54 microns) min. matte tin on contact tails |
| **Shield:** | Copper alloy; nickel plated |

### Electrical

| | |
|---|---|
| **Contact Resistance:** | 20 mΩ max. |
| **Insulation resistance:** | 500 MΩ min. at 500V DC for 2 mins max. |
| **Current Rating:** | 1.5 Amps per contact |
| **Voltage Rating:** | 125 Volts AC |
| **DWV:** | 1000 VAC, 60 Hz. 1 min. |

### Mechanical

| | |
|---|---|
| **Insertion Force:** | 5 lbs max. |
| **Pull Retention Force:** | 20 lbs min. |
| **Durability:** | 750 mating & unmating cycles |
| **Recommended Soldering Temperature:** | Wave soldering peaked at 260°C for 5 secs max. |
| **Operating Temperature:** | -55°C to + 85°C |
| **UL File #:** | E135615 |

*Note: Suitable for IR Reflow*

## ORDERING INFORMATION

RJULE - 4 X X X X - 01 X

**Number of Positions**
- 4 - 8 Positions

**Contact Plating**
- 0 - 1~3µ" gold plating
- 1 - 15µ" gold plating
- 2 - 30µ" gold plating
- 3 - 50µ" gold plating

**Housing Options**
- 1 - Black
- 2 - Yellow
- 3 - Red

**Number of Contacts**
- 4 - 4 Contacts
- 6 - 6 Contacts
- 8 - 8 Contacts

**Packaging**
- Blank - Tray
- T - Tape & Reel

**Number of Ports**
- 01- 1 Port

**Shield Options**
- 0 - No shield
- 1 - Shield with top, side, and rear PCB tabs
- 2 - Shield with flared side tabs
- 3 - Shield with rear PCB, no top or side tabs

**Didn't find what you were looking for?**
Please contact sales@amphenolcanada.com and let us know what you need.

Click to Return to Table of Contents

# RJULE

TAB DOWN, RECESSED, LOW PROFILE

## Single Port

### Non-Shielded

**RJULE-4X180-01**

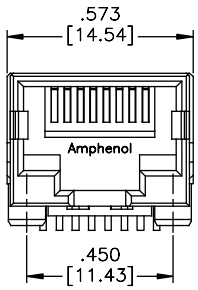


FRONT VIEW

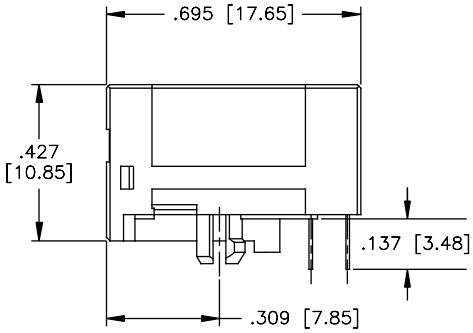


SIDE VIEW

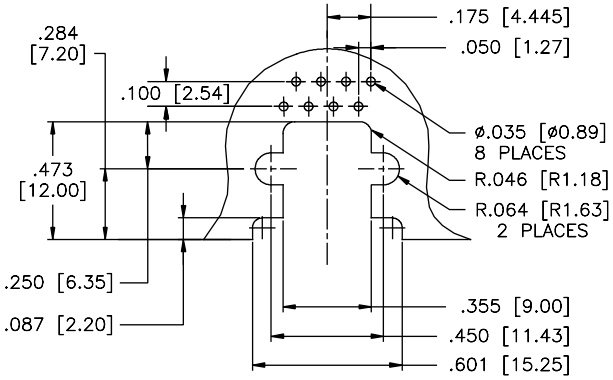


RECOMMENDED PCB LAYOUT

### Shielded with Side Ground Tabs

**RJULE-4X182-01**

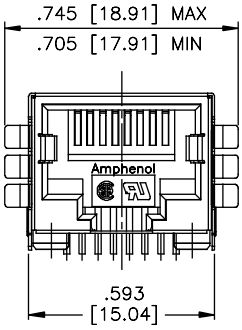


FRONT VIEW

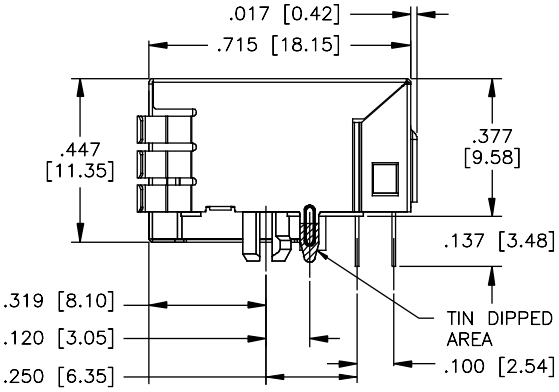


SIDE VIEW

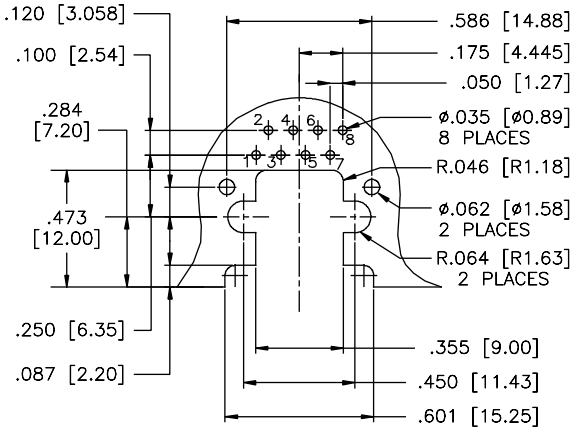


RECOMMENDED PCB LAYOUT

### Standard Shield

**RJULE-4X181-01**

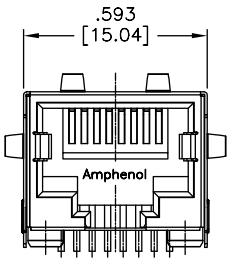


FRONT VIEW

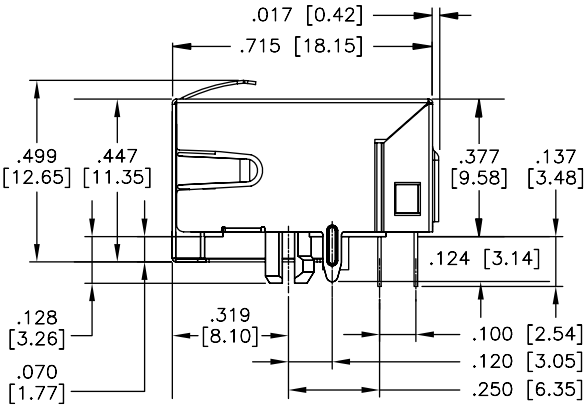


SIDE VIEW

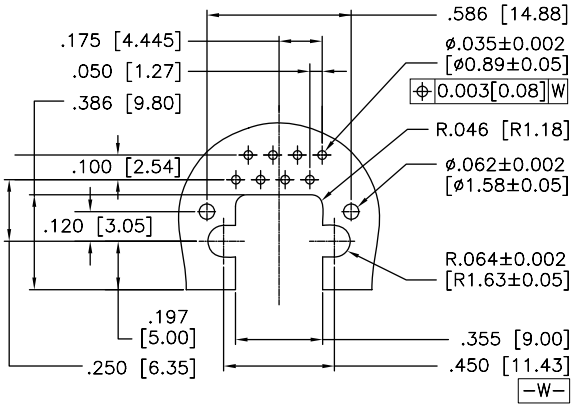


RECOMMENDED PCB LAYOUT

# RJE73

TAB DOWN, SINGLE PORT, LOW PROFILE, WITH LEDs

## TAB DOWN, SINGLE PORT, LOW PROFILE

The RJE73 modular jack is a low profile RJ45 with LEDs and superior EMI shielding with a small footprint for space sensitive designs. This connector features built-in LEDs that provide link activity and network verification. This product is ideal for LAN applications such as adapter cards and routers.

## SPECIFICATIONS

### Material

| | |
|---|---|
| **Insulator:** | High temp. thermoplastic; Complies with UL94-0; Black |
| **Contacts:** | Phosphor bronze hard temper with gold plating options over 50µ" min. nickel on contact mating area; 100µ" min. matte tin plating on solder tails |
| **Shield:** | Stainless steel with tin dipped tails |
| **LED:** | Tin plating on LED tails |

### Mechanical

| | |
|---|---|
| **Insertion Force:** | 5 lbs max. |
| **Pull Retention Force:** | 20 lbs min. |
| **Durability:** | 750 mating & unmating cycles |
| **Recommended Soldering Temperature:** | Wave soldering peaked at 245°C for 8 to 10 secs max. |
| **Operating Temperature:** | -55°C to + 85°C |
| **UL File #:** | E135615 |

### Electrical

| | |
|---|---|
| **Contact Resistance:** | 20 mΩ max. |
| **Insulation resistance:** | 500 MΩ min. at 500V DC for 2 mins max. |
| **Current Rating:** | 1.0 Amps per contact |
| **Voltage Rating:** | 125 Volts AC |
| **DWV:** | 1000 VAC, 60 Hz. 1 min. |
| **LED Forward DC Current:** | 20mA typical |
| **LED Forward Voltage:** | 1.9 Volts max. at 2mA (for single colours)<br>2.6 Volts max. at 2mA (for bicolours) |
| **LED Reverse Voltage:** | 5 Volts min. |
| **LED Light Intensity:** | 0.4 to 1.5 mcd min. at 2mA (for single colours)<br>0.5 mcd min. at 2mA (for bicolours) |
| **LED Wave Length:** | Yellow: 587 ± 7 nm measured at 20mA<br>Green: 565 ± 6 nm measured at 20mA<br>Red: 625 ± 5 nm measured at 20mA |

## ORDERING INFORMATION

RJE73 - 1 8 8 - 0 0 X X X

**Number of Ports**
1- 1 Port

**Number of Positions**
8 - 8 Positions

**Number of Contacts**
8 - 8 Contacts

**Shield Options**
0 - Shield without tabs
1 - Shield with side and top tabs
N - No Shield

**LED Options**
Click to view page 3 for options

**Contact Plating**
1 - 6µ" gold plating
2 - 15µ" gold plating
3 - 30µ" gold plating
4 - 50µ" gold plating

**Didn't find what you were looking for?**
Please contact sales@amphenolcanada.com and let us know what you need.

Click to Return to Table of Contents

# RJE73

TAB DOWN, SINGLE PORT, LOW PROFILE, WITH LEDs

## Single Port

**RJE73-188-00XX0**

### Shielded - No Top or Side Tabs

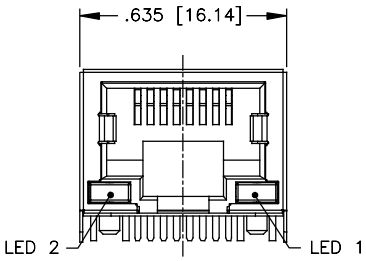


FRONT VIEW

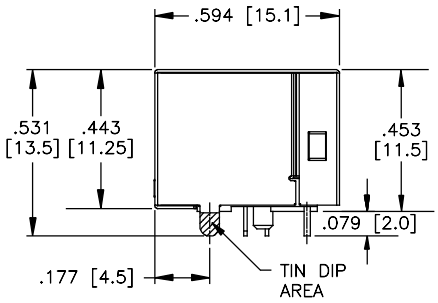


SIDE VIEW

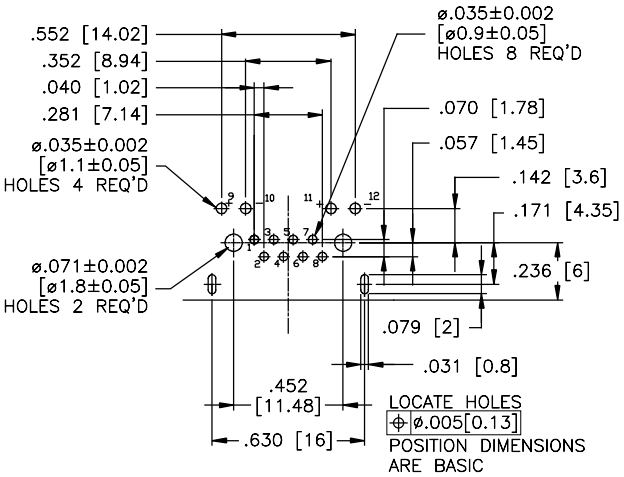


RECOMMENDED PCB LAYOUT

### Shielded - With Top and Side Tabs

**RJE73-188-00XX1**

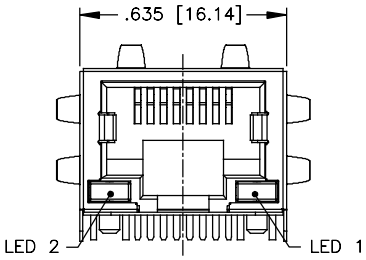


FRONT VIEW

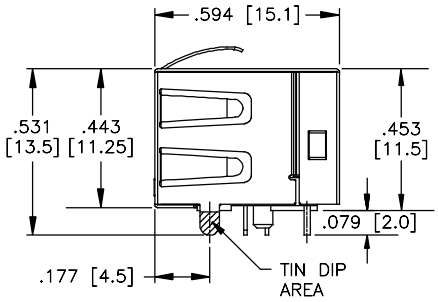


SIDE VIEW

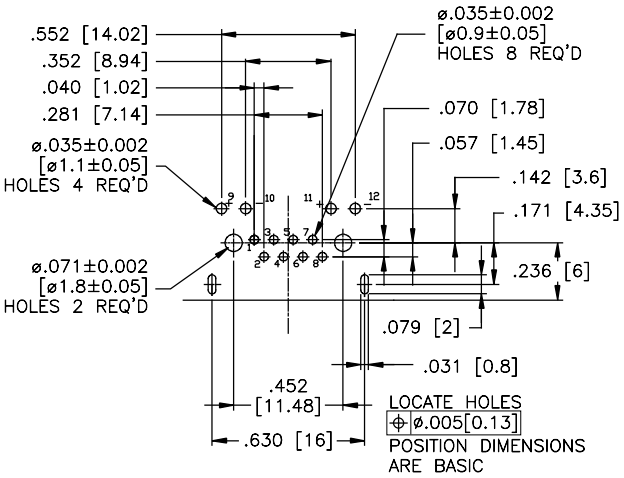


RECOMMENDED PCB LAYOUT

# RJSSE

TAB UP, WITH LIGHT PIPES

## TAB UP, WITH LIGHT PIPES

The RJSSE series represents an expansion of Amphenol Canada's current RJHSE series connector. The RJSSE offers all the benefits of the RJHSE series in SMT with light pipes. Shielded and non-shielded versions are available with or without light pipes.

## SPECIFICATIONS

### Material

| | |
|---|---|
| **Insulator:** | High temp. thermoplastic; Complies with UL94-0; Black |
| **Contacts:** | Phosphor bronze hard temper with gold plating options over 50µ" min. nickel on contact mating area; 100µ" min. matte tin plating on solder tails |
| **Shield:** | Copper alloy; nickel or matte tin plating |
| **Light Pipe:** | Optical polycarbonate; UL 94V-0 |

### Electrical

| | |
|---|---|
| **Contact Resistance:** | 20 mΩ max. |
| **Insulation resistance:** | 500 MΩ min. at 500V DC for 2 mins max. |
| **Current Rating:** | 1.5 Amps per contact |
| **Voltage Rating:** | 125 Volts AC |
| **DWV:** | 1500 VAC, 60 Hz. 1 min. |

### Mechanical

| | |
|---|---|
| **Insertion Force:** | 5 lbs max. |
| **Pull Retention Force:** | 20 lbs min. |
| **Durability:** | 750 mating & unmating cycles |
| **Recommended Soldering Temperature:** | IR Reflow peaked at 260°C for 5 to 10 secs max. |
| **Operating Temperature:** | -55°C to + 85°C |
| **UL File #:** | E135615 |

*Note: Light Pipes to be installed after soldering*

## ORDERING INFORMATION

RJSSE - X X X X - XX - X

**Version**
- 5 - 8 Positions, 20µ" gold plating
- 7 - 6 Positions, 20µ" gold plating

**Shield Options**
- 0 - No shield with hold-down bracket
- 3 - Shield with top tabs
- 5 - Shield with flattened bottom tab
- F - Shield without tabs and boardlock
- N - No shield, no hold-down bracket
- S - Shield with straight PCB

**Number of Contacts**
- 4 - 4 Contacts
- 6 - 6 Contacts
- 8 - 8 Contacts

**Packaging**
- Blank - Tray
- T - Tape & Reel

**Number of Ports**
- Blank - 1 Port
- 02 - 2 Ports
- 04 - 4 Ports

**Light Pipe Options**
- 0 - Blocked
- 1 - With light pipe
- 2 - Without light pipe, not blocked

**Note:** The light pipes are available to be purchased on their own.
Part Number: RJSSE-2485-01

**Didn't find what you were looking for?**
Please contact sales@amphenolcanada.com and let us know what you need.

Click to Return to Table of Contents

# RJSSE

TAB UP, WITH LIGHT PIPES

## Single Port

### Non-Shielded

### RJSSE-5080

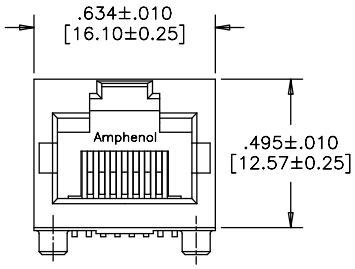


FRONT VIEW

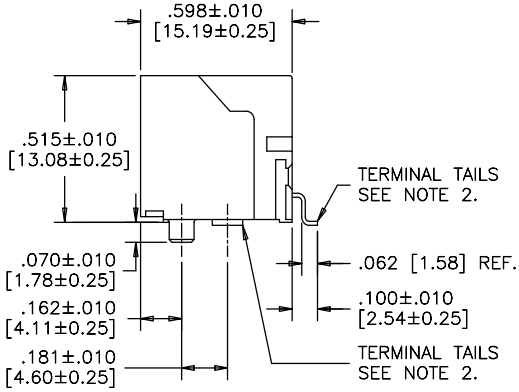


SIDE VIEW

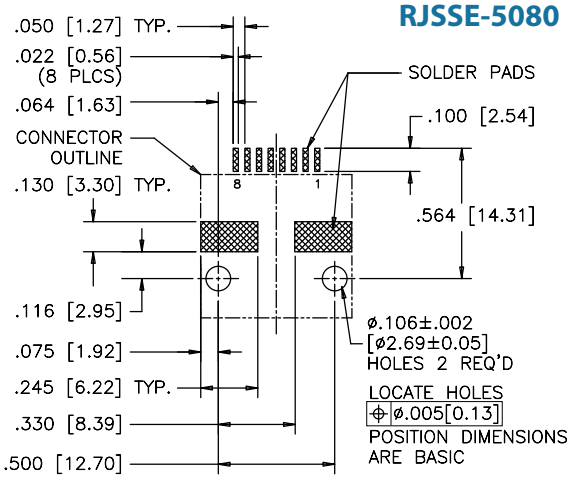


RECOMMENDED PCB LAYOUT

### Standard Shield - With Top & Side Ground Tabs

### RJSSE-5381

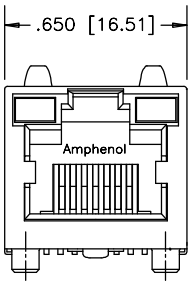


FRONT VIEW

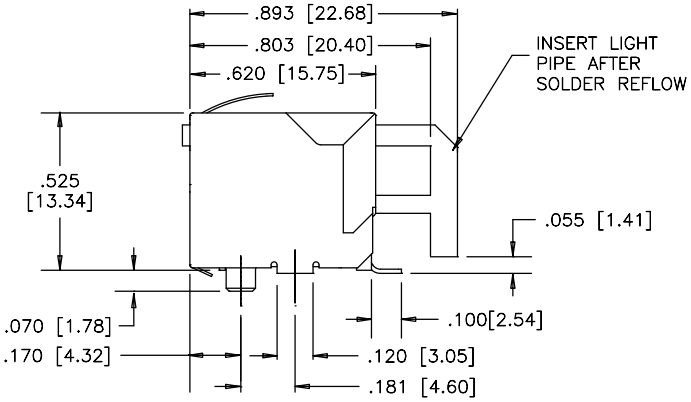


SIDE VIEW

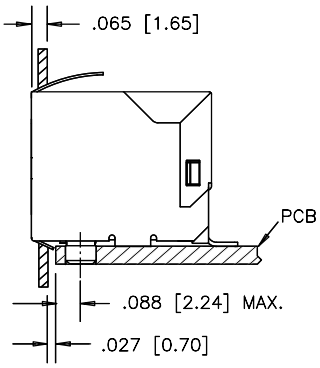


FOR REFERENCE

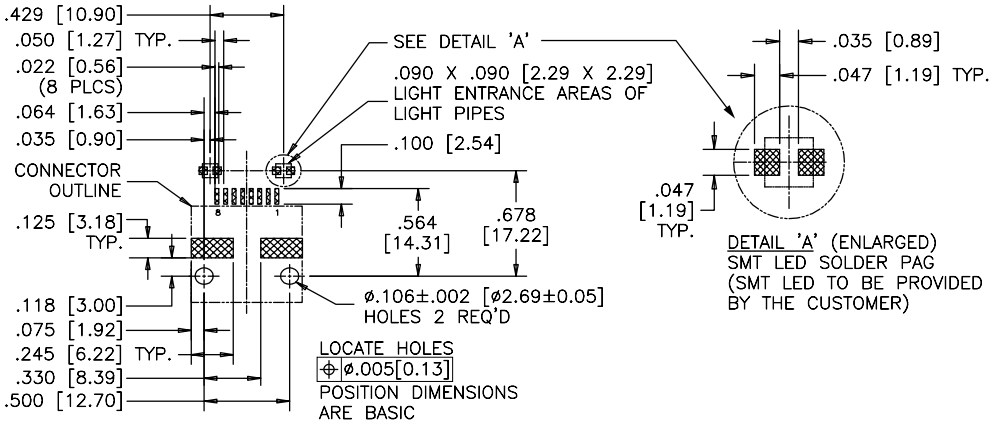


RECOMMENDED PCB LAYOUT

# RJSSE

TAB UP, WITH LIGHT PIPES

## Multi Port

### Non-Shielded

**RJSSE-5081-02**

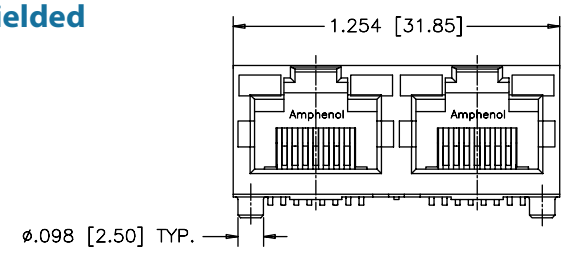


FRONT VIEW

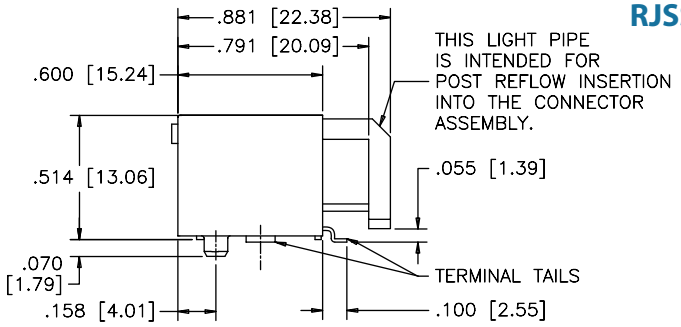


SIDE VIEW

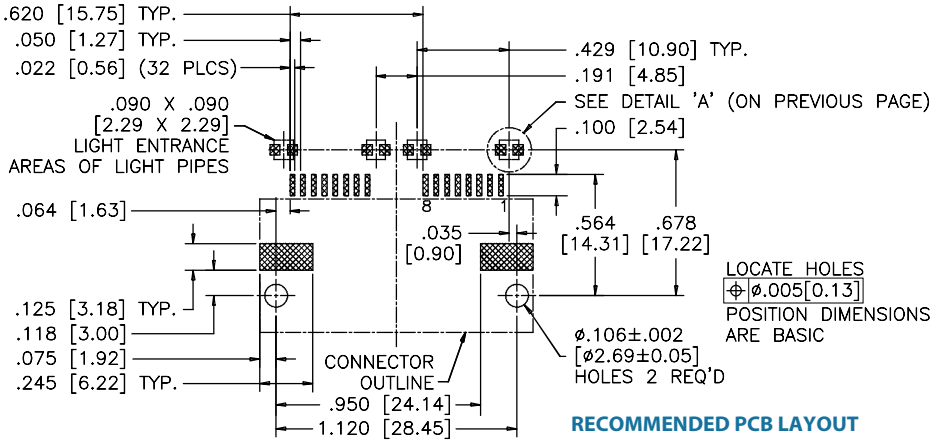


RECOMMENDED PCB LAYOUT

## Multi Port

### Shielded

**RJSSE-5381-02**

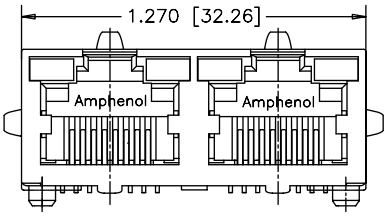


FRONT VIEW

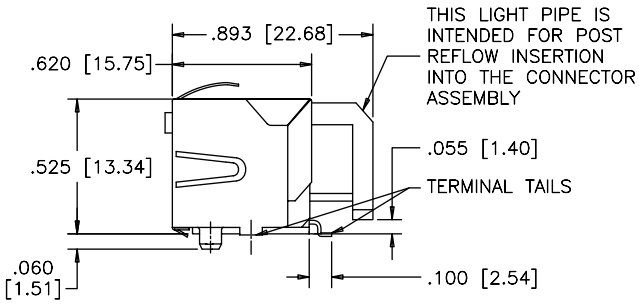


SIDE VIEW

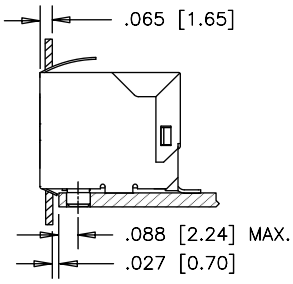


FOR REFERENCE

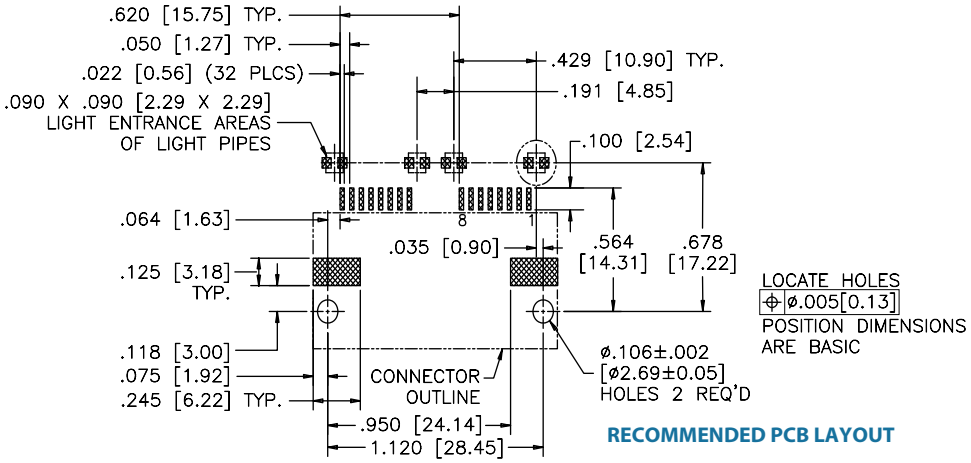


RECOMMENDED PCB LAYOUT


Amphenol Commercial Products - Amphenol Canada Corp. | Telephone: (416) 291-4401 | Fax: (416) 754-8668 | Email: sales@amphenolcanada.com
All specifications are subject to change without notice. Catalogue is updated regularly. Please refer to www.amphenolcanada.com for the most recent edition.

# RJCSE

TAB UP, STANDARD PROFILE, WITH LEDs

## TAB UP, STANDARD PROFILE, WITH LEDs

The RJCSE is a right angle surface mount connector. Shielding is available for increased EMI performance as well as built-in LEDs for link activity and network verification. This product is ideal for LAN applications such as adapter cards and routers.

## SPECIFICATIONS

### Material

| | |
|---|---|
| **Insulator:** | High temp. thermoplastic;<br>Complies with UL 94V-0; Black |
| **Contacts:** | Phosphor bronze hard temper with gold thickness options (6µ", 15µ", 30µ", 50µ") over 50µ" min. nickel on contact mating area; 100µ" min. matte tin plating on soldering tail |
| **Shield:** | Stainless steel with matte-tin plating |

### Mechanical

| | |
|---|---|
| **Insertion Force:** | 5 lbs max. |
| **Pull Retention Force:** | 20 lbs min. |
| **Durability:** | 750 mating & unmating cycles |
| **Recommended Soldering Temperature:** | Suitable for IR Reflow at 260°C for 10 secs max. |
| **Operating Temperature:** | - 55°C to + 85°C |
| **UL File #:** | E135615 |
| **CSA File #:** | LR685398 |

### Electrical

| | |
|---|---|
| **Contact Resistance:** | 20 mΩ max. |
| **Insulation resistance:** | 500 MΩ min. at 500V DC for 2 mins max. |
| **Current Rating:** | 1.5 Amps per contact |
| **Voltage Rating:** | 125 Volts AC |
| **DWV:** | 1000 VAC, 60 Hz. 1 min. |
| **LED Forward DC Current:** | 20mA typical |
| **LED Forward Voltage:** | 1.9 Volts max. at 2mA (for single colours)<br>2.6 Volts max. at 2mA (for bicolours) |
| **LED Reverse Voltage:** | 5 Volts min. |
| **LED Light Intensity:** | 0.4 to 1.5 mcd min. at 2mA (for single colours)<br>0.5 mcd min. at 2mA (for bicolours) |
| **LED Wave Length:** | Yellow: 587 ± 7 nm measured at 20mA<br>Green: 565 ± 6 nm measured at 20mA<br>Red: 625 ± 5 nm measured at 20mA |

## ORDERING INFORMATION

RJCSE - X X X X - 01

**Version**
- 3 - 8 Positions, 15µ" gold plating
- 4 - 8 Positions, 30µ" gold plating
- 5 - 8 Positions, 50µ" gold plating

**Shield Options**
- 0 - No shield
- 3 - Standard shield with top and side tabs
- 4 - Standard shield with no tabs

**Number of Ports**
- 01 - 1 Port

**LED Options**
- Click to view page 3 for options

**Number of Contacts**
- 2 - 2 Contacts
- 4 - 4 Contacts
- 6 - 6 Contacts
- 8 - 8 Contacts

**Didn't find what you were looking for?**
Please contact sales@amphenolcanada.com and let us know what you need.

Click to Return to Table of Contents

# RJCSE

TAB UP, STANDARD PROFILE, WITH LEDs

## Single Port

### Non-Shielded

**RJCSE-508X-01**

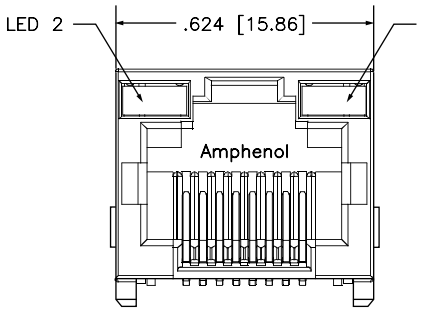


FRONT VIEW

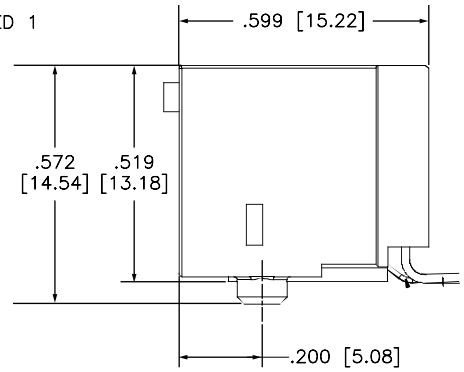


SIDE VIEW

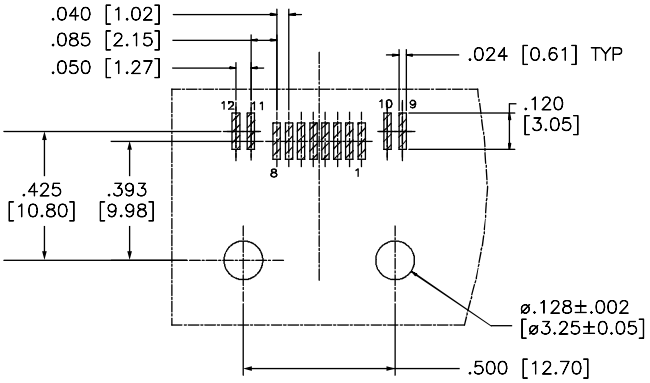


RECOMMENDED PCB LAYOUT

### Shielded

**RJCSE-538X-01**

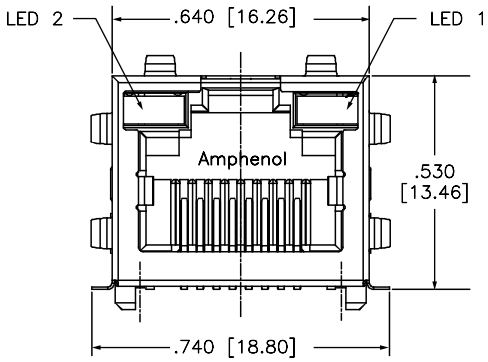


FRONT VIEW

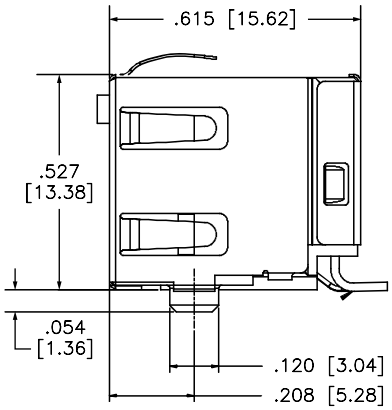


SIDE VIEW

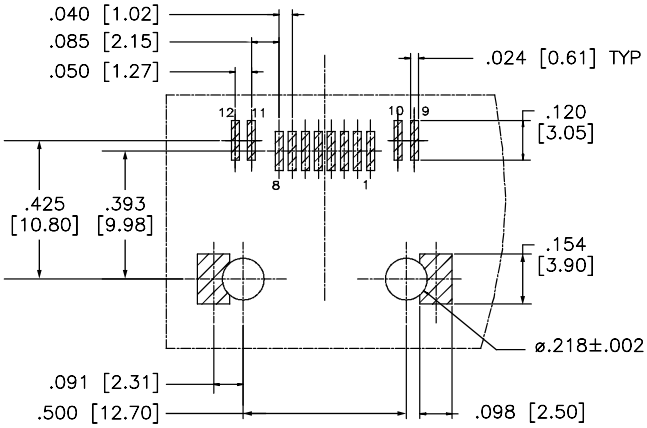


RECOMMENDED PCB LAYOUT


Amphenol Commercial Products - Amphenol Canada Corp. | Telephone: (416) 291-4401 | Fax: (416) 754-8668 | Email: sales@amphenolcanada.com
All specifications are subject to change without notice. Catalogue is updated regularly. Please refer to www.amphenolcanada.com for the most recent edition.

# RJLSE

TAB DOWN, ULTRA LOW PROFILE

## TAB DOWN, ULTRA LOW PROFILE

The RJLSE series contains surface mount modular jacks with superior EMI performance that supports Ethernet Protocols. This low profile connector is built to meet your high volume RJ requirements. This series is a true pick and place compatible SMT connector and is available with different shielding, contacts, gold plating thickness, and color options. This connector is built with high temperature engineering thermoplastic and suitable for the IR Reflow solder process.

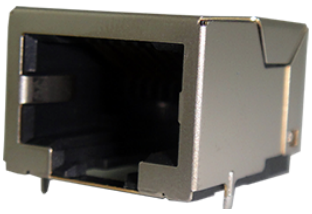

## SPECIFICATIONS

### Material

| | |
|---|---|
| **Insulator:** | High temp. thermoplastic; Complies with UL 94V-0; Black |
| **Contacts:** | Phosphor bronze hard temper with gold thickness options (6µ", 15µ", 30µ", 50µ") over 50µ" min. nickel on contact mating area; Gold flash over palladium nickel also available; 100µ" min. matte tin plating on soldering tail |
| **Shield:** | Copper alloy; nickel or matte tin plated |

*Note: Other insulator colour options available*

### Electrical

| | |
|---|---|
| **Contact Resistance:** | 20 mΩ max. |
| **Insulation resistance:** | 500 MΩ min. at 500V DC for 2 mins max. |
| **Current Rating:** | 1.5 Amps per contact |
| **Voltage Rating:** | 125 Volts AC |
| **DWV:** | 1000 VAC, 60 Hz. 1 min. |

### Mechanical

| | |
|---|---|
| **Insertion Force:** | 5 lbs max. |
| **Pull Retention Force:** | 20 lbs min. |
| **Durability:** | 750 mating & unmating cycles |
| **Recommended Soldering Temperature:** | Lead free reflow soldering up to 260°C for 10 secs max. 3 reflow passes max. |
| **Operating Temperature:** | - 55°C to + 85°C |
| **UL File #:** | E135615 |
| **CSA File #:** | LR685398 |

*Recommended reflow profile below*

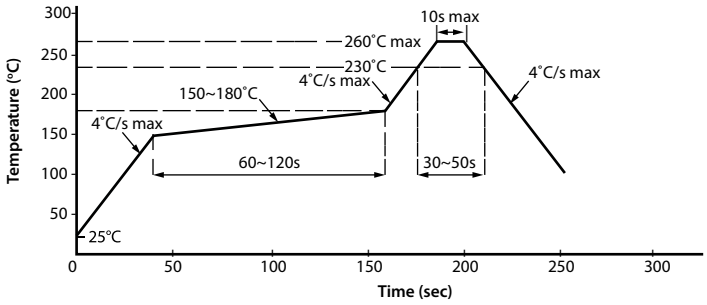


## ORDERING INFORMATION

RJLSE - X X X X X - 01 - X

**Version**
- 4 - 8 Positions
- 6 - 6 Positions

**Contact Plating**
- 0 - 1~3µ" gold plating
- 1 - 15µ" gold plating
- 2 - 30µ" gold plating
- 3 - 50µ" gold plating

**Shield Options**
- 0 - No shield with hold-down bracket
- 1 - Standard shield, SMT without PCB tabs
- 3 - Shield with PCB tabs

**Packaging**
- Blanks - Tray
- T - Tape & Reel

**Number of Ports**
- 01 - 1 Port

**Housing Options**
- 1 - Black
- 2 - Yellow
- 3 - Red

**Number of Contacts**
- 2 - 2 Contacts
- 4 - 4 Contacts
- 6 - 6 Contacts
- 8 - 8 Contacts

**Didn't find what you were looking for?**
Please contact sales@amphenolcanada.com and let us know what you need.

Click to Return to Table of Contents

# RJLSE

TAB DOWN, ULTRA LOW PROFILE

## Single Port

### Non-Shielded

**RJLSE-6X061-01**

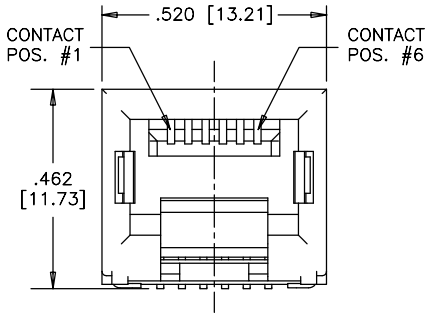


FRONT VIEW

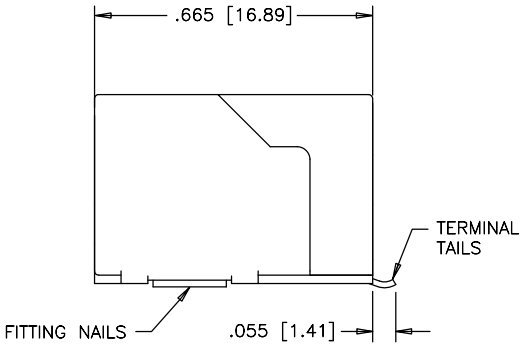


SIDE VIEW

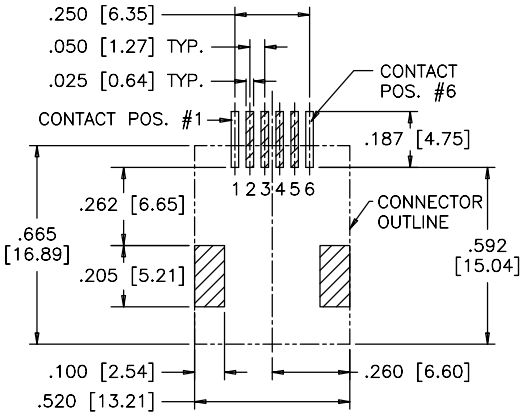


RECOMMENDED PCB LAYOUT

### Shielded

**RJLSE-4X381-01**

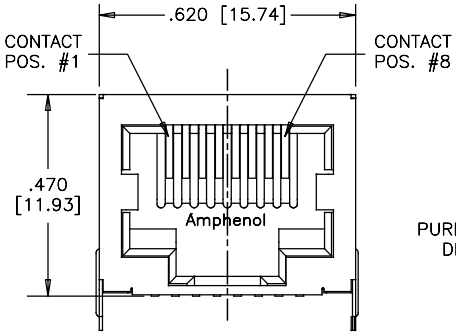


FRONT VIEW

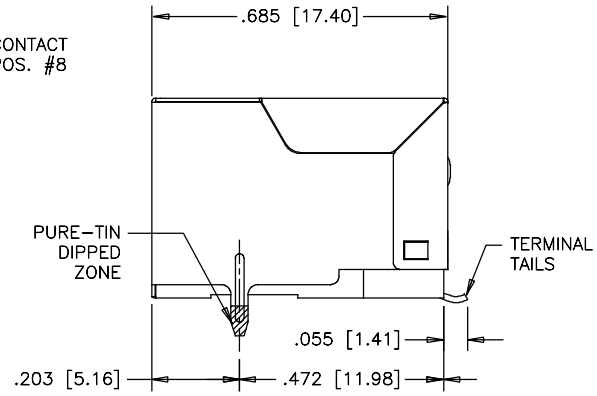


SIDE VIEW

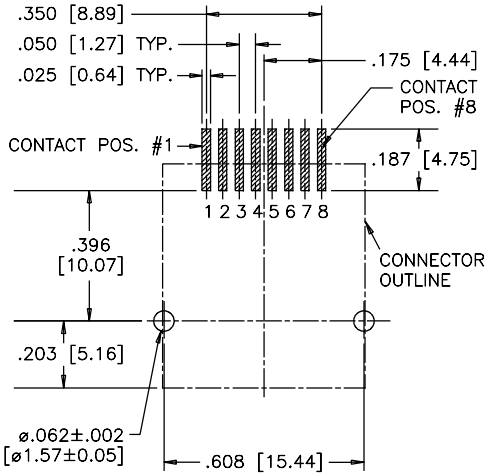


RECOMMENDED PCB LAYOUT


Amphenol Commercial Products - Amphenol Canada Corp. | Telephone: (416) 291-4401 | Fax: (416) 754-8668 | Email: sales@amphenolcanada.com
All specifications are subject to change without notice. Catalogue is updated regularly. Please refer to www.amphenolcanada.com for the most recent edition.

# RJE07

TAB DOWN, SINGLE PORT

## TAB DOWN, SINGLE PORT

RJE07 products belong to a family of standard modular jacks designed to meet requirements for a variety of applications. Options within the FRJAE series offer low cost and effective EMC control within standard RJ11 & RJ45 connector footprints. EMC control is offered by a completely shielded connector and/or with the use of a high resistivity, high impedance ferrite filter. No board layout changes are required for its use. Simply replace the standard non-filtered connector for superior EMC performance.

## SPECIFICATIONS

### Material

| | |
|---|---|
| **Insulator:** | High temp. thermoplastic; Complies with UL 94V-0; Black |
| **Contacts:** | Phosphor bronze hard temper with gold thickness options (6µ", 15µ", 30µ", 50µ") over 50µ" min. nickel on contact mating area; Gold flash over palladium nickel also available; 100µ" min. matte tin plating on soldering tail |
| **Shield:** | Copper alloy; nickel or matte tin plated |

### Mechanical

| | |
|---|---|
| **Insertion Force:** | 5 lbs max. |
| **Pull Retention Force:** | 20 lbs min. |
| **Durability:** | 750 mating & unmating cycles |
| **Recommended Soldering Temperature:** | Reflow soldering peaked at 260°C for 6 to 8 secs max |
| **Operating Temperature:** | - 40°C to + 85°C |
| **UL File Number:** | E136228 |

### Electrical

| | |
|---|---|
| **Contact Resistance:** | 20 mΩ max. |
| **Insulation resistance:** | 500 MΩ min. at 500V DC for 2 mins max. |
| **Current Rating:** | 1.5 Amps per contact |
| **Voltage Rating:** | 125 Volts AC |
| **DWV:** | 1000 VAC, 60 Hz. 1 min. |

## ORDERING INFORMATION

RJE07 - 1 X X - X X X 0

**Number of Ports**
1 - 1 Port

**Number of Positions**
6 - 6 Positions
8 - 8 Positions

**Number of Contacts**
4 - 4 Contacts
6 - 6 Contacts
8 - 8 Contacts

**Shield Options**
0 - No shield
2 - Through-hole shield
3 - Surface mount shield

**Modifier**
0 - Standard product

**Panel Stop Options**
1 - Without panel stop
2 - With panel stop (must have for shield)

**Contact Plating**
1 - 6µ" gold plating
2 - 15µ" gold plating
3 - 30µ" gold plating
4 - 50µ" gold plating

**Didn't find what you were looking for?**
Please contact sales@amphenolcanada.com and let us know what you need.

Click to Return to Table of Contents

# RJE07

TAB DOWN, SINGLE PORT

## Single Port

### Non-Shielded

**RJE07-188-0X10**

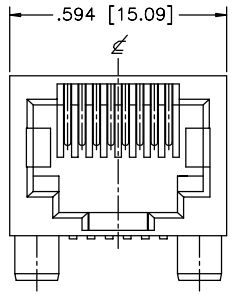


FRONT VIEW

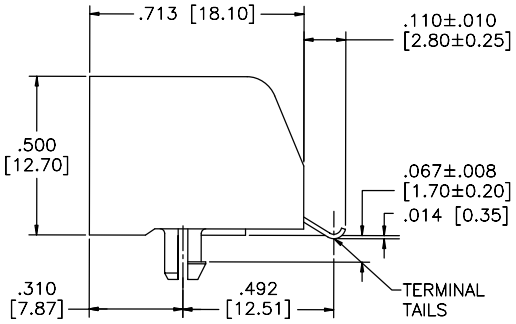


SIDE VIEW

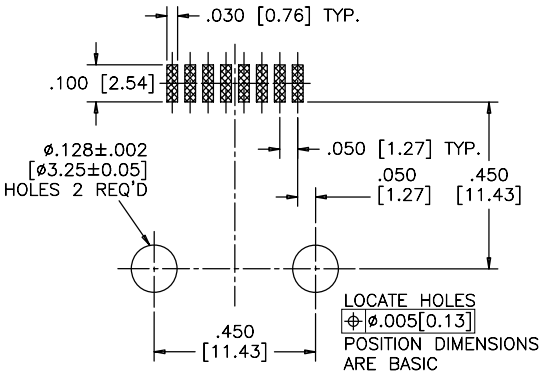


RECOMMENDED PCB LAYOUT

### Surface Mount Shield

**RJE07-188-3X20**

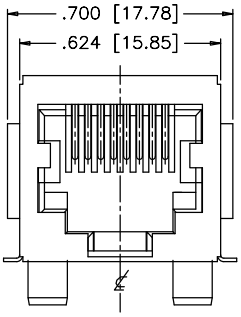


FRONT VIEW

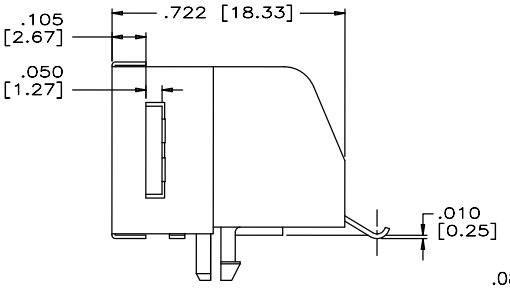


SIDE VIEW

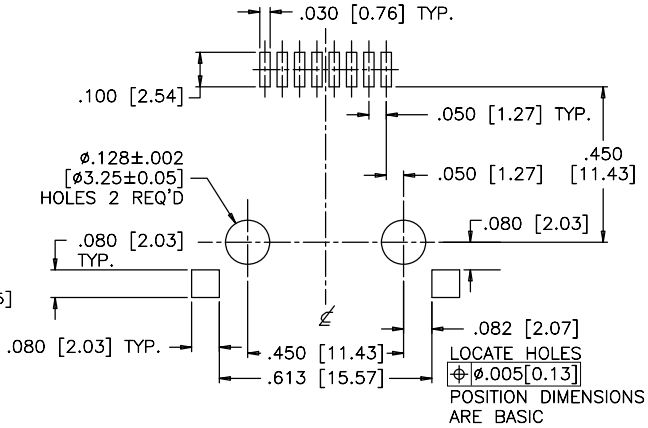


RECOMMENDED PCB LAYOUT

### Through-Hole Shield

**RJE07-188-2X20**

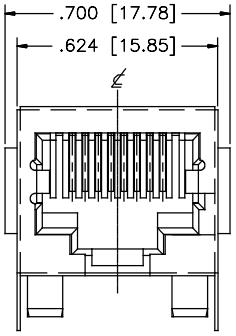


FRONT VIEW

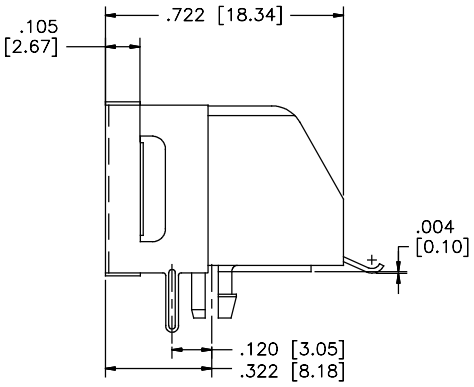


SIDE VIEW

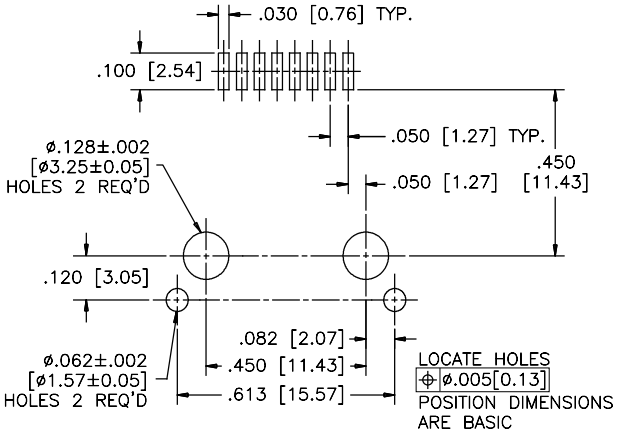


RECOMMENDED PCB LAYOUT


Amphenol Commercial Products - Amphenol Canada Corp. | Telephone: (416) 291-4401 | Fax: (416) 754-8668 | Email: sales@amphenolcanada.com
All specifications are subject to change without notice. Catalogue is updated regularly. Please refer to www.amphenolcanada.com for the most recent edition.

# RJE15

TAB DOWN, SINGLE PORT, LOW PROFILE

## TAB DOWN, SINGLE PORT, LOW PROFILE

The RJE15 low profile connector is built to meet your high volume RJ requirements. This is a true pick and place compatible SMT connector and is available with or without shielding, as well as with a variety of options including number of contacts, plating thickness, and color. This connector is built with high temperature engineering thermoplastic and suitable for IR Reflow solder process.

## SPECIFICATIONS

### Material

| | |
|---|---|
| **Insulator:** | High temp. thermoplastic; Complies with UL 94V-0; Black |
| **Contacts:** | Phosphor bronze hard temper with gold thickness options (6µ", 15µ", 30µ", 50µ") over 50µ" min. nickel on contact mating area; 100µ" min. matte tin plating or gold flash on tail area |
| **Shield:** | Copper alloy; nickel plating overall |

### Mechanical

| | |
|---|---|
| **Insertion Force:** | 5 lbs max. |
| **Pull Retention Force:** | 20 lbs min. |
| **Durability:** | 750 mating & unmating cycles |
| **Recommended Soldering Temperature:** | Wave soldering at 260°C for 6 to 8 secs max |
| **Operating Temperature:** | - 40°C to + 70°C |

### Electrical

| | |
|---|---|
| **Contact Resistance:** | 25 mΩ max. |
| **Insulation resistance:** | 1000 MΩ min. at 500V DC for 2 mins max. |
| **Current Rating:** | 1.5 Amps per contact |
| **Voltage Rating:** | 125 Volts AC |
| **DWV:** | 1000 VAC, 60 Hz. 1 min. |

## ORDERING INFORMATION

RJE15 - 1 X X - X X 1 0

**Number of Ports**
1 - 1 Port

**Number of Positions**
4 - 4 Positions
6 - 6 Positions
8 - 8 Positions
A - 10 Positions

**Number of Contacts**
2 - 2 Contacts
4 - 4 Contacts
6 - 6 Contacts
8 - 8 Contacts
A - 10 Contacts

**Modifier**
0 - Standard product

**Panel Stop Options**
1 - No panel stop

**Contact Plating**
1 - 6µ" gold plating
2 - 15µ" gold plating
3 - 30µ" gold plating
4 - 50µ" gold plating

**Shield Options**
0 - No shield
1 - Standard shield, no tabs
5 - Shield with top and side tabs

**Didn't find what you were looking for?**
Please contact sales@amphenolcanada.com and let us know what you need.

Click to Return to Table of Contents

# RJE15

TAB DOWN, SINGLE PORT, LOW PROFILE

## Single Port

### Non-Shielded

**RJE15-1AA-0X10**

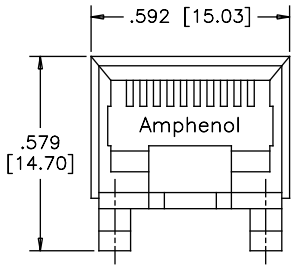


FRONT VIEW

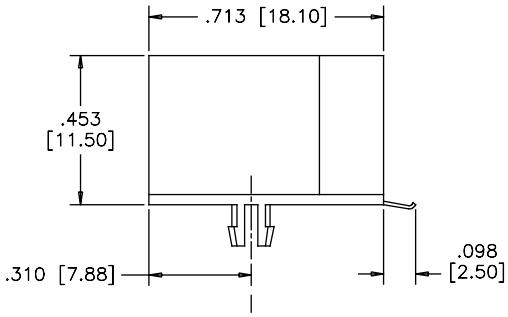


SIDE VIEW

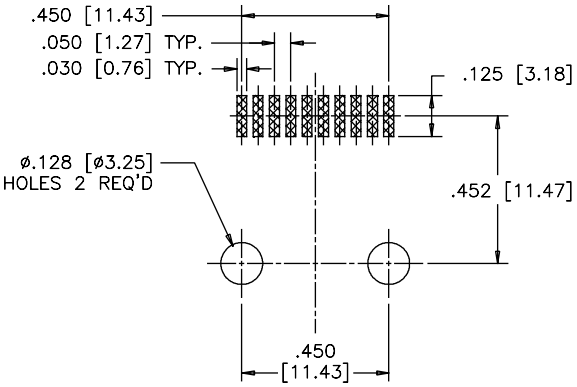


RECOMMENDED PCB LAYOUT

### Shielded

**RJE15-1AA-1X10**

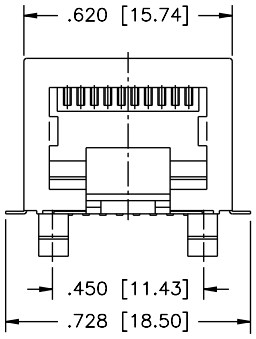


FRONT VIEW

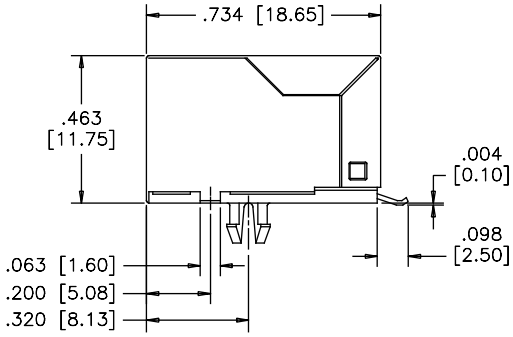


SIDE VIEW

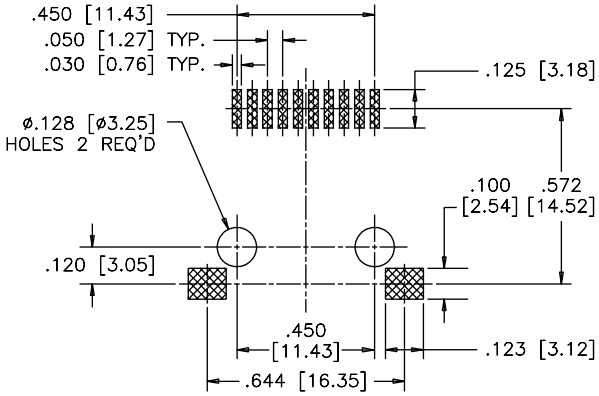


RECOMMENDED PCB LAYOUT

### *Notes*


**Amphenol Commercial Products - Amphenol Canada Corp.** | **Telephone: (416) 291-4401** | **Fax: (416) 754-8668** | **Email:** sales@amphenolcanada.com
All specifications are subject to change without notice. Catalogue is updated regularly. Please refer to www.amphenolcanada.com for the most recent edition.

# RJE56

PRESS FIT, TAB DOWN, RJ45

## TAB DOWN, RJ45

The RJE56 series is designed for applications where soldering is not an option. The press fit contacts and shield tabs have the "eye of the needle" design and provide good PCB retention as well as reliable electrical performance.

## SPECIFICATIONS

### Material

| | |
|---|---|
| **Insulator:** | PBT material; complies with UL 940-0; Black |
| **Contacts:** | Phosphor bronze hard temper with gold thickness options (6µ", 15µ", 30µ", 50µ") over 50µ" min. nickel on contact mating area; 100µ" min. matte tin plating on press fit tail |
| **Shield:** | Stainless steel |

### Electrical

| | |
|---|---|
| **Contact Resistance:** | 20 mΩ max. |
| **Insulation resistance:** | 500 MΩ min. at 500V DC for 2 mins max. |
| **Current Rating:** | 1.5 Amps per contact |
| **Voltage Rating:** | 125 Volts AC |
| **DWV:** | 1000 VAC, 60 Hz. 1 min. |

### Mechanical

| | |
|---|---|
| **Insertion Force:** | 5 lbs max. |
| **Pull Retention Force:** | 20 lbs min. |
| **Durability:** | 750 mating & unmating cycles |
| **Recommended Soldering Temperature:** | Wave soldering peaked at 260°C for 5 to 8 secs max |
| **Operating Temperature:** | - 55°C to + 85°C |

*Note: Suitable for IR Reflow*

## ORDERING INFORMATION

**RJE56 - 1 8 X - X X 1 0 - X**

**Number of Ports**
1 - 1 Port

**Number of Positions**
8 - 8 Positions

**Number of Contacts**
6 - 6 Contacts
8 - 8 Contacts

**Shield Options**
0 - No shield
1 - Full Shield

**Packaging**
Blank - Tray
T - Tape & Reel

**Modifier**
0 - Standard product

**Panel Stop Options**
1 - No panel stop

**Contact Plating**
1 - 6µ" gold plating
2 - 15µ" gold plating
3 - 30µ" gold plating
4 - 50µ" gold plating

**Didn't find what you were looking for?**
Please contact sales@amphenolcanada.com and let us know what you need.

Click to Return to Table of Contents

# RJE56

PRESS FIT, TAB DOWN, RJ45

## Single Port

**RJE56-188-1X10**

### Shielded

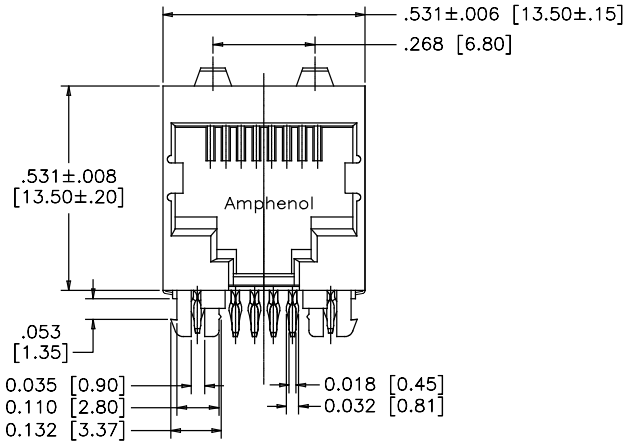


FRONT VIEW

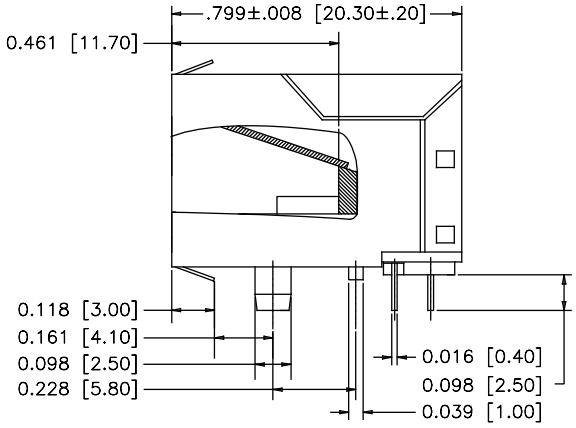


SIDE VIEW

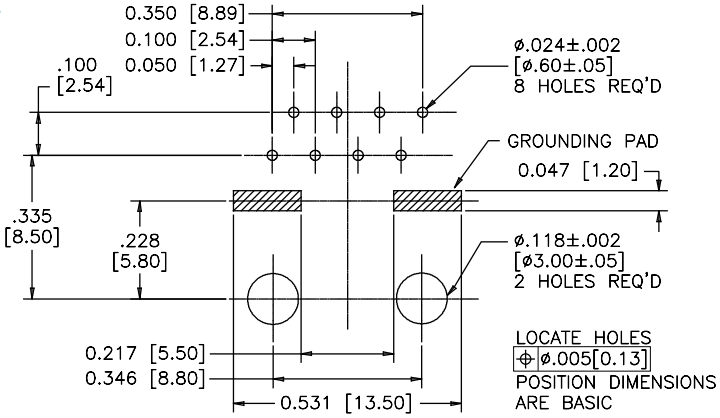


RECOMMENDED PCB LAYOUT

### *Notes*


**Amphenol Commercial Products - Amphenol Canada Corp.** | **Telephone: (416) 291-4401** | **Fax: (416) 754-8668** | **Email:** sales@amphenolcanada.com
All specifications are subject to change without notice. Catalogue is updated regularly. Please refer to www.amphenolcanada.com for the most recent edition.

# RJE06

SINGLE PORT, SLIM PROFILE

## SINGLE PORT, SLIM PROFILE

RJE06 series is a group of products within a family of standard modular jacks designed to meet requirements for a variety of applications. Options within the RJE06 family include shielded & non-shielded, and 8P8C configurations.

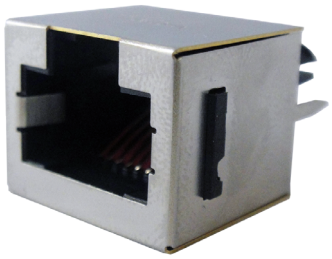

## SPECIFICATIONS

### Material

| | |
|---|---|
| **Insulator:** | Engineering theromplastic; Complies with UL 94V-0; Black |
| **Contacts:** | Phosphor bronze hard temper with gold thickness options (6µ", 15µ", 30µ", 50µ") over 50µ" min. nickel on contact mating area; 100µ" min. matte tin or gold flash plating on tail area |
| **Shield:** | Copper alloy; nickel plating overall |

### Electrical

| | |
|---|---|
| **Contact Resistance:** | 20 mΩ max. |
| **Insulation resistance:** | 500 MΩ min. at 500V DC for 2 mins max. |
| **Current Rating:** | 1.5 Amps per contact |
| **Voltage Rating:** | 125 Volts AC |
| **DWV:** | 1000 VAC, 60 Hz. 1 min. |

### Mechanical

| | |
|---|---|
| **Insertion Force:** | 5 lbs max. |
| **Pull Retention Force:** | 20 lbs min. |
| **Durability:** | 750 mating & unmating cycles |
| **Recommended Soldering Temperature:** | Wave soldering peaked at 260°C for 5 secs max. |
| **Operating Temperature:** | -40°C to + 70°C |
| **UL File #:** | E136228 |

*Note: Connectors with high temp. material are suitable for IR Reflow*

## ORDERING INFORMATION

RJE06 - 1 X X - X X X X

**Number of Ports**
1 -1 Port

**Number of Positions**
6 - 6 Positions
8 - 8 Positions

**Number of Contacts**
6 - 6 Contacts
8 - 8 Contacts

**Shield Options**
0 - No shield
1 - Standard shield

**Modifier**
0 - Standard tail length
1 - 4.0mm tail length

**Panel Stop Options**
1 - Without panel stop
2 - With panel stop

**Contact Plating**
1 - 6µ" gold plating
2 - 15µ" gold plating
3 - 30µ" gold plating
4 - 50µ" gold plating

**Didn't find what you were looking for?**
Please contact sales@amphenolcanada.com and let us know what you need.

Click to Return to Table of Contents

# RJE06

SINGLE PORT, SLIM PROFILE

## Single Port

### Non-Shielded

### RJE06-188-0X10

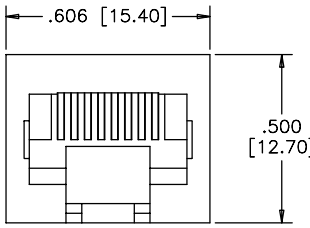


FRONT VIEW

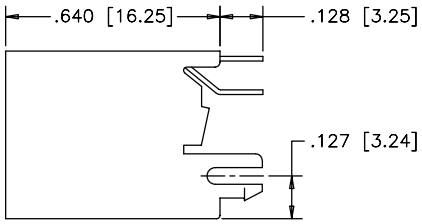


SIDE VIEW

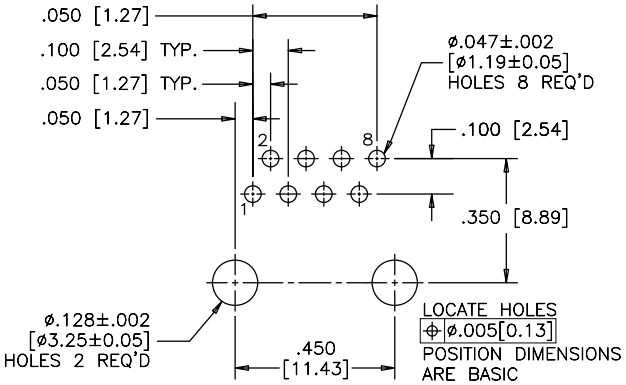


RECOMMENDED PCB LAYOUT

### Non-Shielded

### RJE06-166-0X10

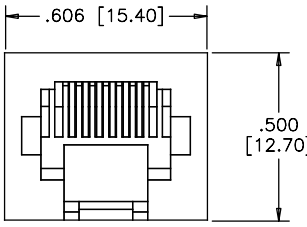


FRONT VIEW

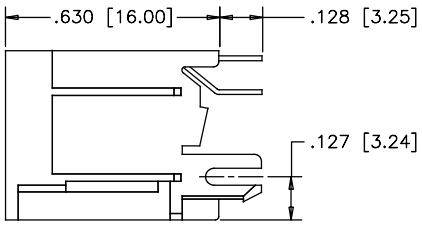


SIDE VIEW

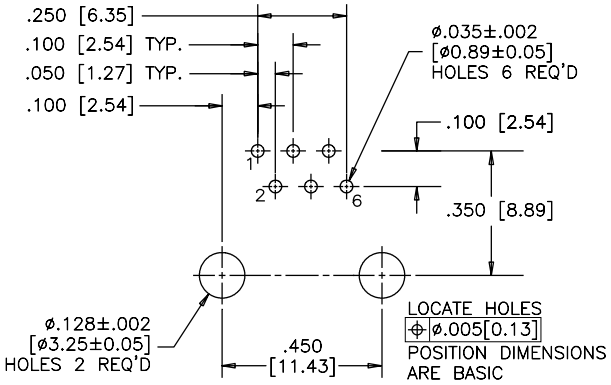


RECOMMENDED PCB LAYOUT

### Standard Shield

### RJE06-188-1X10

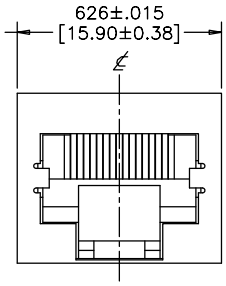


FRONT VIEW

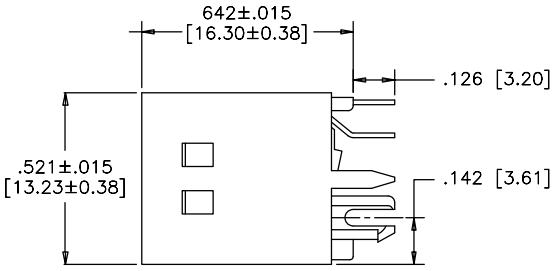


SIDE VIEW

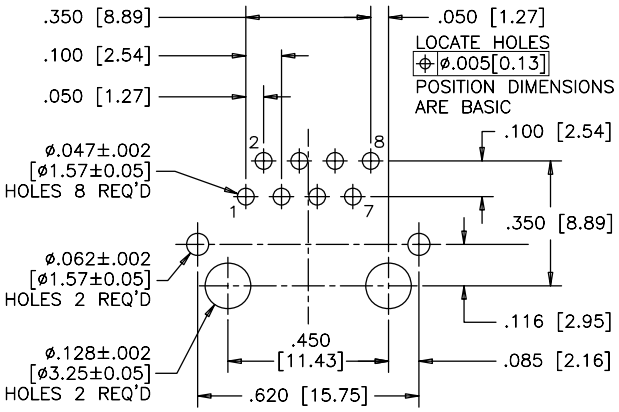


RECOMMENDED PCB LAYOUT

# RJE08

SINGLE AND DUAL PORT, STANDARD PROFILE

## SINGLE AND DUAL PORT, STANDARD PROFILE

RJE08 series is a group of products within a family of standard modular jacks designed to meet requirements for a variety of applications. Options within the RJE08 include with and without panel stops, and RJ11 & RJ45 configurations.

## SPECIFICATIONS

### Material

| | |
|---|---|
| **Insulator:** | Engineering theromplastic; Complies with UL 94V-0; Black |
| **Contacts:** | Phosphor bronze hard temper with gold thickness options (6µ", 15µ", 30µ", 50µ") over 50µ" min. nickel on contact mating area; 100µ" min. matte tin or gold flash plating on tail area |

### Electrical

| | |
|---|---|
| **Contact Resistance:** | 20 mΩ max. |
| **Insulation resistance:** | 500 MΩ min. at 500V DC for 2 mins max. |
| **Current Rating:** | 1.5 Amps per contact |
| **Voltage Rating:** | 125 Volts AC |
| **DWV:** | 1000 VAC, 60 Hz. 1 min. |

### Mechanical

| | |
|---|---|
| **Insertion Force:** | 5 lbs max. |
| **Pull Retention Force:** | 20 lbs min. |
| **Durability:** | 750 mating & unmating cycles |
| **Recommended Soldering Temperature:** | Wave soldering peaked at 260°C for 5 seconds max. |
| **Operating Temperature:** | -40°C to + 70°C |
| **UL File #:** | E136228 |

## ORDERING INFORMATION

RJE08 - X X X - 0 X X X

**Number of Ports**
- 1 - 1 Port
- 2 - 2 Port
- 4 - 4 Port

**Number of Positions**
- 4 - 4 Positions
- 6 - 6 Positions
- 8 - 8 Positions
- A - 10 Positions

**Number of Contacts**
- 4 - 4 Contacts
- 6 - 6 Contacts
- 8 - 8 Contacts
- A - 10 Contacts

**Modifier**
- 0 - Standard product
- 9 - Standard for two port

**Panel Stop Options**
- 1 - Without panel stop
- 2 - With panel stop

**Contact Plating**
- 1 - 6µ" gold plating
- 2 - 15µ" gold plating
- 3 - 30µ" gold plating
- 4 - 50µ" gold plating

**Shield Options**
- 0 - No shield

**Didn't find what you were looking for?**
Please contact sales@amphenolcanada.com and let us know what you need.

Click to Return to Table of Contents

# RJE08

SINGLE AND DUAL PORT, STANDARD PROFILE

## Single Port

### Non-Shielded

**RJE08-188-0X10**

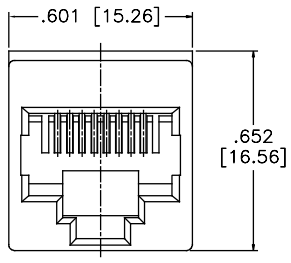


TOP VIEW

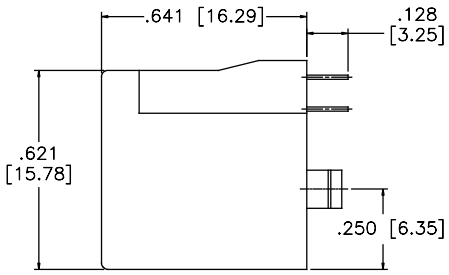


SIDE VIEW

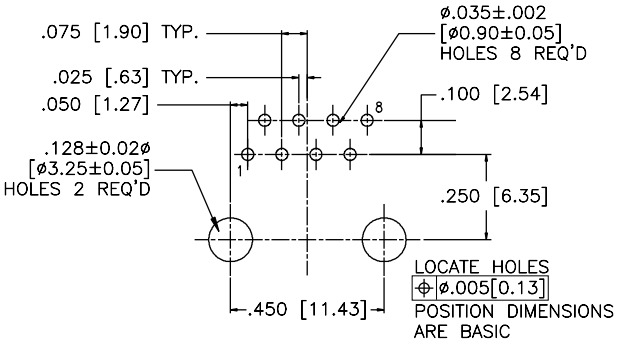


RECOMMENDED PCB LAYOUT

## Dual Port

### Non-Shielded

**RJE08-288-0X19**

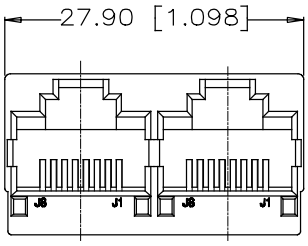


TOP VIEW

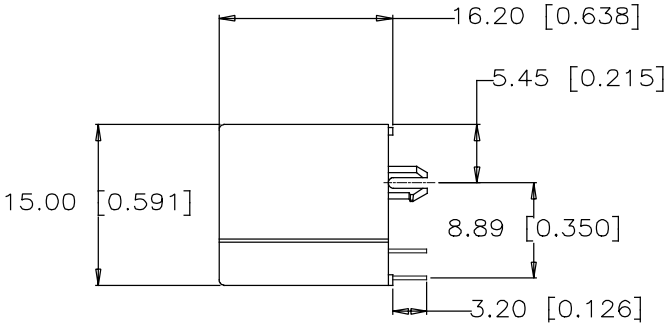


SIDE VIEW

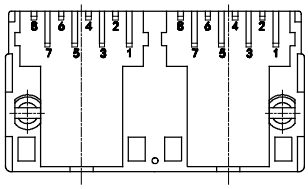

BOTTOM VIEW

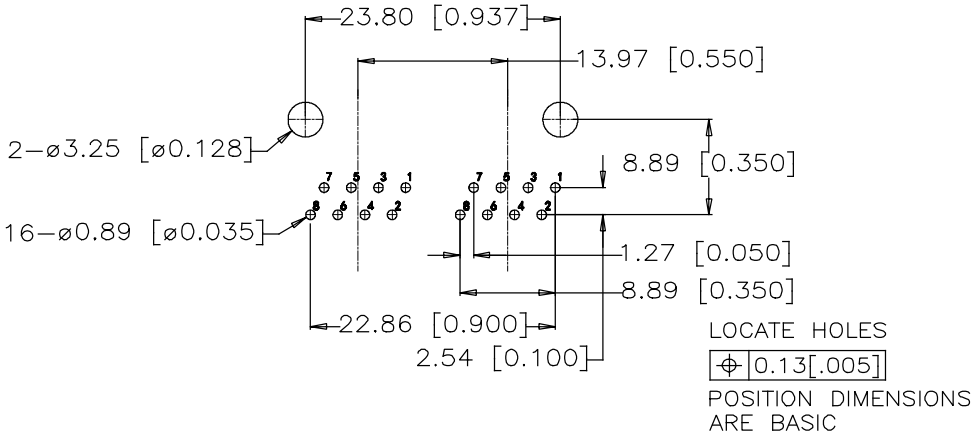


RECOMMENDED PCB LAYOUT

# RJE74

SINGLE PORT, STANDARD PROFILE

## SINGLE PORT, STANDARD PROFILE

The RJE74 series, with superior EMI shielding, is built to fit your RJ requirements. The vertical 10P10C version is available with an RMK4 key interface to prevent 8P8C plug from entering and damaging the connector. Includes optional Mylar cover for automated assembly equipment.

## SPECIFICATIONS

### Material

| | |
|---|---|
| **Insulator:** | High temp. theromplastic; Complies with UL 94V-0; Black |
| **Contacts:** | Phosphor bronze hard temper with 30µ" min. gold thickness over 50µ" min. nickel on contact mating area; 100µ" min. matte tin plating on soldering tail |
| **Shield:** | Stainless steel; pure tin dipped tail |

### Electrical

| | |
|---|---|
| **Contact Resistance:** | 20 mΩ max. |
| **Insulation resistance:** | 500 MΩ min. at 500V DC for 2 mins max. |
| **Current Rating:** | 1.5 Amps per contact |
| **Voltage Rating:** | 125 Volts AC |
| **DWV:** | 1000 VAC, 60 Hz. 1 min. |

### Mechanical

| | |
|---|---|
| **Insertion Force:** | 5 lbs max. |
| **Pull Retention Force:** | 20 lbs min. |
| **Durability:** | 750 mating & unmating cycles |
| **Recommended Soldering Temperature:** | Peaked at 260°C for 5 secs max. |
| **Operating Temperature:** | -55°C to + 85°C |
| **UL File Number:** | E135615 |

*Note: Suitable for IR Reflow*

## ORDERING INFORMATION

RJE74 - 1 X X - X X 1 X - X

**Number of Ports**
1 -1 Port

**Number of Positions**
8 - 8 Positions
A - 10 Positions

**Number of Contacts**
8 - 8 Contacts
A - 10 Contacts

**Shield Options**
0 - No shield
1 - Full shield

**Packaging**
Blank - PBT, tray, without Mylar
A - High temp housing, tray, without Mylar
H - High temp housing, tape & reel with Mylar

**Modifier**
0 - Standard product
1 - With RMK4 keying

**Panel Stop Options**
1 - No panel stop

**Contact Plating**
1 - 6µ" gold plating
2 - 15µ" gold plating
3 - 30µ" gold plating
4 - 50µ" gold plating

**Didn't find what you were looking for?**
Please contact sales@amphenolcanada.com and let us know what you need.

Click to Return to Table of Contents

# RJE74

SINGLE PORT, STANDARD PROFILE

## Single Port

### Non-Shielded

**RJE74-1AA-0X10**

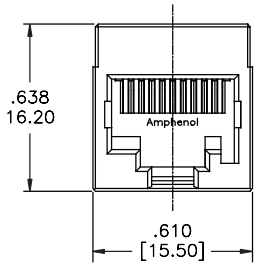


FRONT VIEW

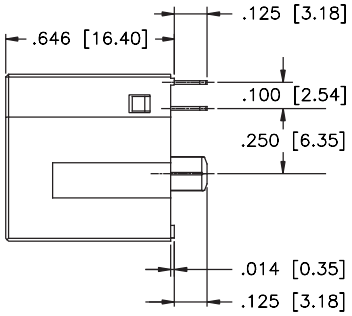


SIDE VIEW

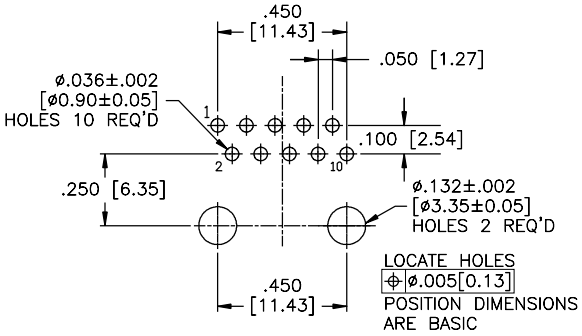


RECOMMENDED PCB LAYOUT

### Non-Shielded with Keying

**RJE74-1AA-0X11**

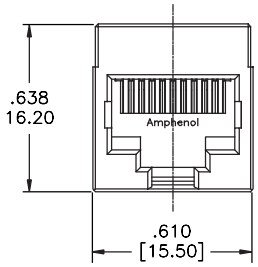


FRONT VIEW

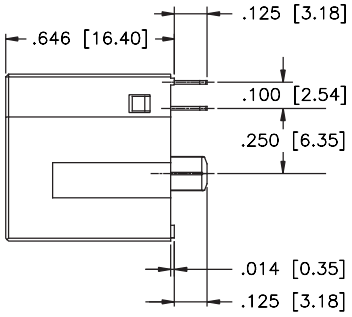


SIDE VIEW

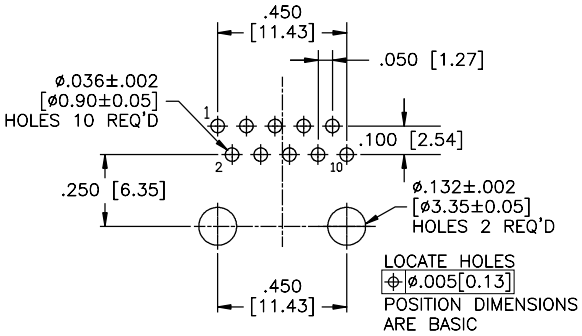


RECOMMENDED PCB LAYOUT

### Shielded with Keying

**RJE74-1AA-1X11**

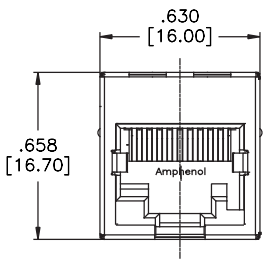


FRONT VIEW

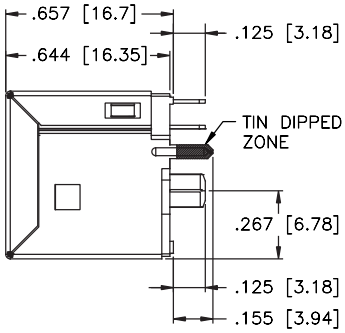


SIDE VIEW

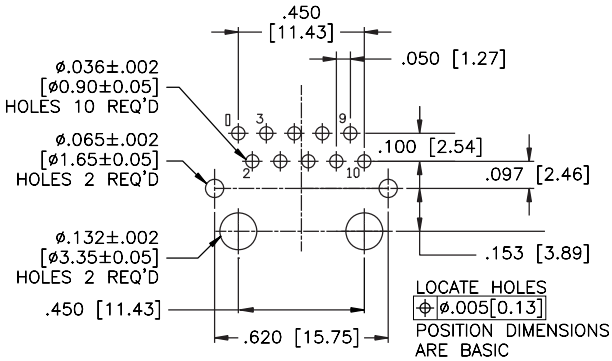


RECOMMENDED PCB LAYOUT

# RJE88

SINGLE PORT, LOW PROFILE, WITH LEDs

## SINGLE PORT, LOW PROFILE, WITH LEDs

Vertical through-hole (THT) in single port RJ45 configurations with full shield or superior EMI protection. A variety of LED options for link activity and network verification are available. Made with high temperature composite and when accompanied with our high temperature resistant LEDs, these connectors are well suited for the IR Reflow process.

## SPECIFICATIONS

### Material

| | |
|---|---|
| **Insulator:** | High temp. theromplastic; Complies with UL 94V-0; Black |
| **Contacts:** | Phosphor bronze hard temper with gold thickness options (6µ", 15µ", 30µ", 50µ") over 50µ" min. nickel on contact mating area; 100µ" min. matte tin plating on soldering tail |
| **Shield:** | Stainless steel; pure tin dipped tail |
| **LED:** | Tin plating on LED tails |

### Mechanical

| | |
|---|---|
| **Insertion Force:** | 5 lbs max. |
| **Pull Retention Force:** | 20 lbs min. |
| **Durability:** | 750 mating & unmating cycles |
| **Recommended Soldering Temperature:** | Wave soldering peaked at 260°C for 5 secs max. |
| **Operating Temperature:** | -55°C to + 85°C |

*Note: Connectors without LEDs are suitable for IR Reflow*

### Electrical

| | |
|---|---|
| **Contact Resistance:** | 20 mΩ max. |
| **Insulation resistance:** | 500 MΩ min. at 500V DC for 2 mins max. |
| **Current Rating:** | 1.5 Amps per contact |
| **Voltage Rating:** | 125 Volts AC |
| **DWV:** | 1000 VAC, 60 Hz. 1 min. |
| **LED Forward DC Current:** | 20mA typical |
| **LED Forward Voltage:** | 1.9 Volts max. at 2mA (for single colours)<br>2.6 Volts max. at 2mA (for bicolours) |
| **LED Reverse Voltage:** | 5 Volts min. |
| **LED Light Intensity:** | 0.4 to 1.5 mcd min. at 2mA (for single colours)<br>0.5 mcd min. at 2mA (for bicolours) |
| **LED Wave Length:** | Yellow: 587 ± 7 nm measured at 20mA<br>Green: 565 ± 6 nm measured at 20mA<br>Red: 625 ± 5 nm measured at 20mAw |

## ORDERING INFORMATION

RJE88 - 1 8 8 - X X X X - X

**Number of Ports**
1 -1 Port

**Number of Positions**
8 - 8 Positions

**Number of Contacts**
8 - 8 Contacts

**Shield Options**
0 - No shield
1 - Shield with PCB tabs, no top and bottom tabs
2 - Shield with PCB tabs, top and bottom tabs

**Packaging**
Blank - Tray
T - T ape & Reel

**Modifier**
0 - 2.7mm (0.11") tail length
A - 3.5mm (0.14") tail length

**LED Options**
Click to view page 3 for options

**Contact Plating**
1 - 6µ" gold plating
2 - 15µ" gold plating
3 - 30µ" gold plating
4 - 50µ" gold plating

**Didn't find what you were looking for?**
Please contact sales@amphenolcanada.com and let us know what you need.

Click to Return to Table of Contents

# RJE88

SINGLE PORT, LOW PROFILE, WITH LEDs

## Single Port

### Shielded

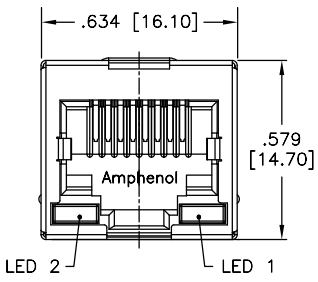


FRONT VIEW

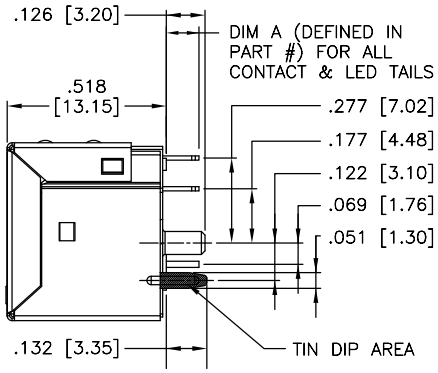


SIDE VIEW

**RJE88-188-1XXX**

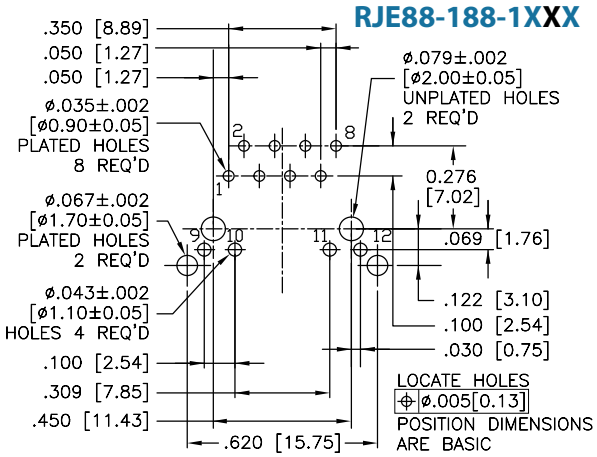


RECOMMENDED PCB LAYOUT

### Non-Shielded

**RJE88-188-0X0X**

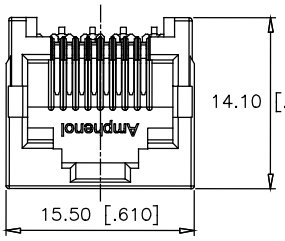


FRONT VIEW

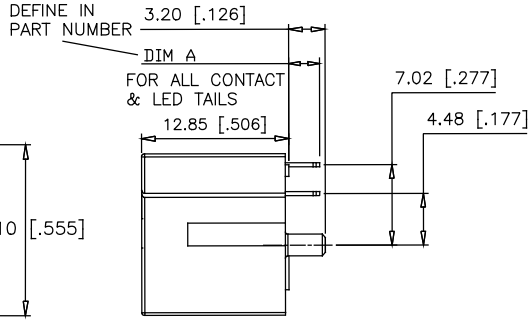


SIDE VIEW

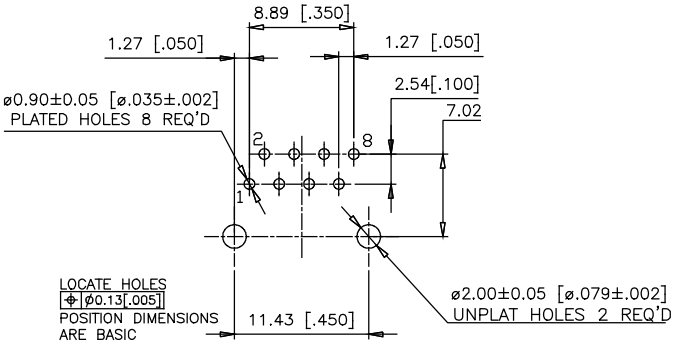


RECOMMENDED PCB LAYOUT

## Notes

# RJE1J

SINGLE PORT, NARROW PROFILE

## PORT, NARROW PROFILE

Multiple position and contact options, single port, vertical connector with no shield or LED options. Made with high temperature thermoplastic this series is suitable for the IR Reflow process. This series is ideal for high volume cost sensitive programs.

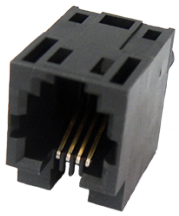

## SPECIFICATIONS

### Material

| | |
|---|---|
| **Insulator:** | High temp. theromplastic; Complies with UL 94V-0; Black |
| **Contacts:** | Phosphor bronze hard temper with gold thickness options (6µ", 15µ", 30µ", 50µ") over 50µ" min. nickel on contact mating area; 100µ" min. matte tin plating on tail |

### Electrical

| | |
|---|---|
| **Contact Resistance:** | 20 mΩ max. |
| **Insulation resistance:** | 500 MΩ min. at 500V DC for 2 mins max. |
| **Current Rating:** | 1.5 Amps per contact |
| **Voltage Rating:** | 125 Volts AC |
| **DWV:** | 1000 VAC, 60 Hz. 1 min. |

### Mechanical

| | |
|---|---|
| **Insertion Force:** | 5 lbs max. |
| **Pull Retention Force:** | 20 lbs min. |
| **Durability:** | 750 mating & unmating cycles |
| **Recommended Soldering Temperature:** | Wave soldering peaked at 260°C for 5 secs max. |
| **Operating Temperature:** | -55°C to + 85°C |
| **UL File Number:** | E135615 |

*Note: Suitable for IR Reflow*

## ORDERING INFORMATION

**RJE1J - 1 X X - 0 X 1 0 - X**

**Number of Ports**
- 1 -1 Port

**Number of Positions**
- 4 - 4 Positions
- 6 - 6 Positions
- 8 - 8 Positions

**Number of Contacts**
- 2 - 2 Contacts
- 4 - 4 Contacts
- 6 - 6 Contacts
- 8 - 8 Contacts

**Shield Options**
- 0 - No shield

**Packaging**
- Blank - Tray
- T - Tape & Reel

**Modifier**
- 0 - Standard product

**Panel Stop Options**
- 1 - Black housing

**Contact Plating**
- 1 - 6µ" gold plating
- 2 - 15µ" gold plating
- 3 - 30µ" gold plating
- 4 - 50µ" gold plating

**Didn't find what you were looking for?**
Please contact sales@amphenolcanada.com and let us know what you need.

Click to Return to Table of Contents

# RJE1J

SINGLE PORT, NARROW PROFILE

## Single Port

### Non-Shielded

**RJE1J-188-0X10**

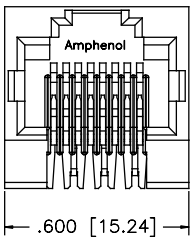


FRONT VIEW

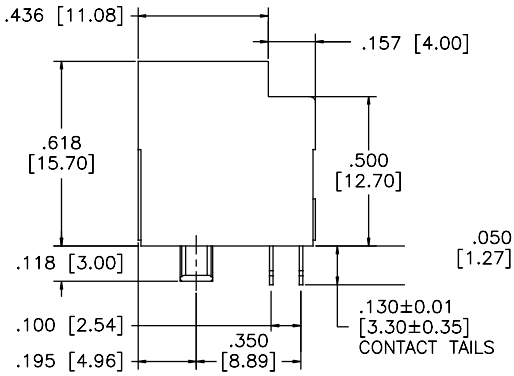


SIDE VIEW

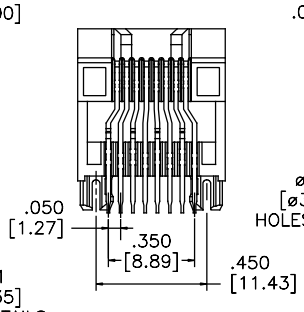


BOTTOM VIEW

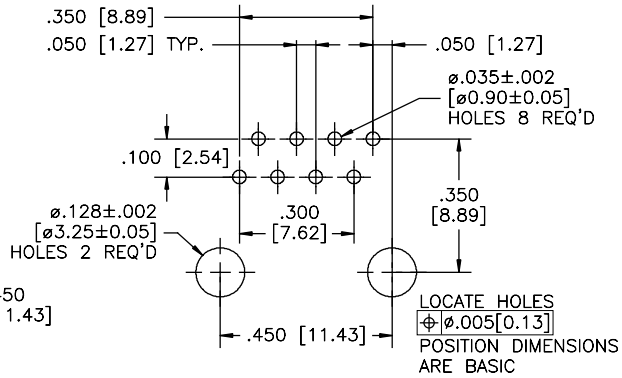


RECOMMENDED PCB LAYOUT

### Non-Shielded

**RJE1J-144-0X10**

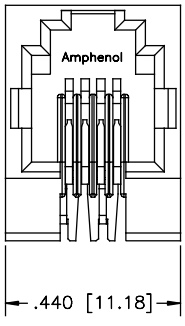


FRONT VIEW

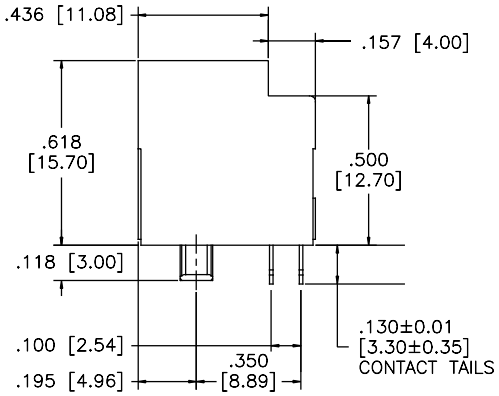


SIDE VIEW

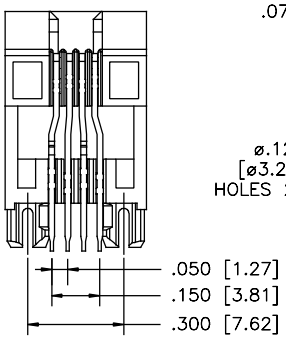


BOTTOM VIEW

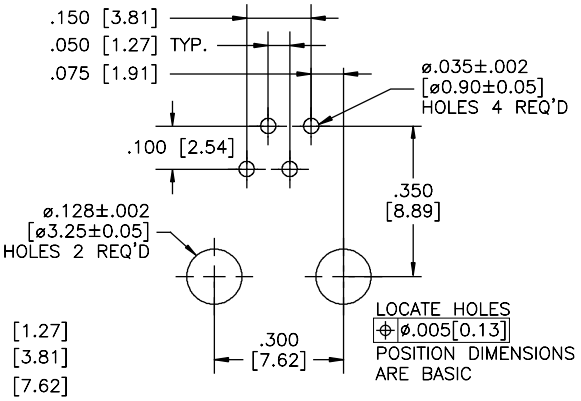


RECOMMENDED PCB LAYOUT

# RJE23

SINGLE PORT, SURFACE MOUNT

## SINGLE PORT, SURFACE MOUNT

The RJE23 series is designed for high volume production where a vertical modular jack is required. Shielding provides increased EMI performance. Surface mount contacts and hold-down nail bracket assist in speeding up the production process.

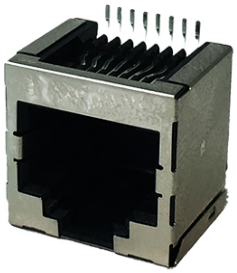

## SPECIFICATIONS

### Material

| | |
|---|---|
| **Insulator:** | High temp. theromplastic; Complies with UL 94V-0; Black |
| **Contacts:** | Phosphor bronze hard temper with gold thickness options (6µ", 15µ", 30µ", 50µ") over 50µ" min. nickel on contact mating area; 100µ" min. matte tin plating over nickel on soldering tail |
| **Shield:** | Copper alloy; matte tin plating |
| **Hold Down:** | Copper alloy; matte tin plating |
| **Coplanarity:** | 0.004" max. gap between all terminal tails |

### Mechanical

| | |
|---|---|
| **Insertion Force:** | 5 lbs max. |
| **Pull Retention Force:** | 20 lbs min. |
| **Durability:** | 750 mating & unmating cycles |
| **Operating Temperature:** | -55°C to + 85°C |
| **UL File Number:** | E135615 |

*Note: Connector is suitable for IR Reflow*

### Electrical

| | |
|---|---|
| **Contact Resistance:** | 20 mΩ max. |
| **Insulation resistance:** | 500 MΩ min. at 500V DC for 2 mins max. |
| **Current Rating:** | 1.5 Amps per contact |
| **Voltage Rating:** | 125 Volts AC |
| **DWV:** | 1000 VAC, 60 Hz. 1 min. |

## ORDERING INFORMATION

RJE23 - 1 X X - X X X X - X

**Number of Ports**
1 -1 Port

**Number of Positions**
4 - 4 Positions
6 - 6 Positions
8 - 8 Positions

**Number of Contacts**
4 - 4 Contacts
6 - 6 Contacts
8 - 8 Contacts

**Shield Options**
0 - No shield
2 - Shield with no tabs
3 - Shield with side tabs

**Packaging**
Blank - Tray
T - Tape & Reel

**Modifier**
3 - Standard with solderplate & mylar tape
4 - Standard with solderplate
6 - Standard with solderplate inward

**Housing/Panel Stop Options**
1 - Black housing without panel stop
2 - Black housing with panel stop

**Contact Plating**
1 - 6µ" gold plating
2 - 15µ" gold plating
3 - 30µ" gold plating
4 - 50µ" gold plating

**Didn't find what you were looking for?**
Please contact sales@amphenolcanada.com and let us know what you need.

Click to Return to Table of Contents

# RJE23

SINGLE PORT, SURFACE MOUNT

## Single Port

### Shielded

**RJE23-188-3X16**

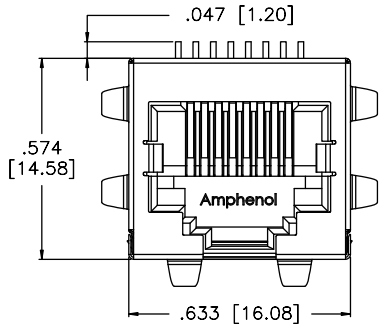


FRONT VIEW

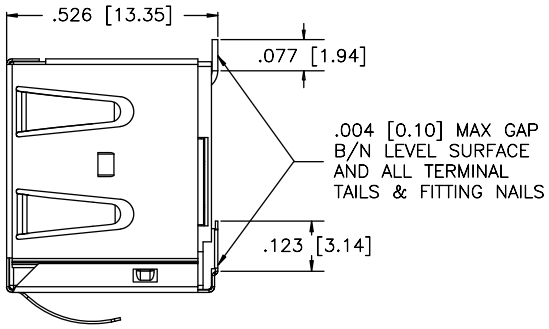


SIDE VIEW

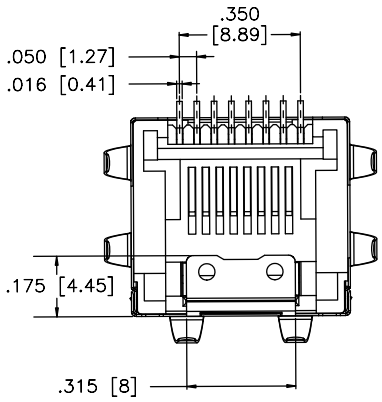


BOTTOM VIEW

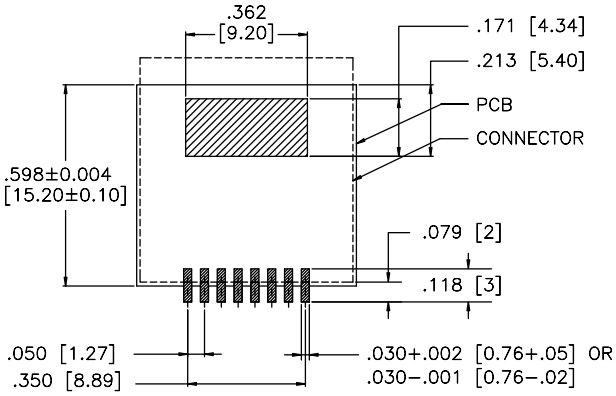


RECOMMENDED PCB LAYOUT

### Non-Shielded

**RJE23-188-0X13**

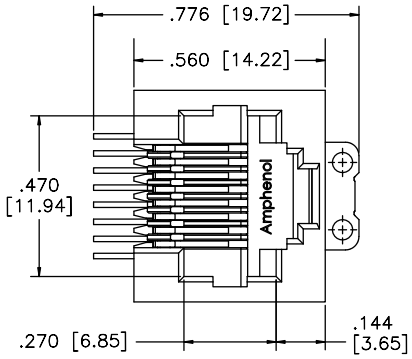


FRONT VIEW

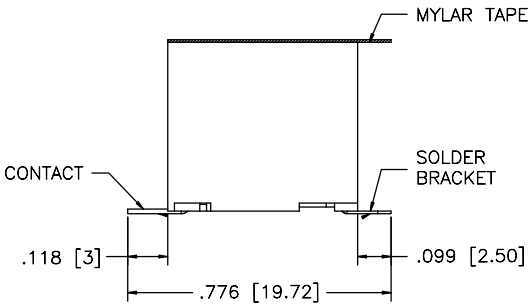


SIDE VIEW

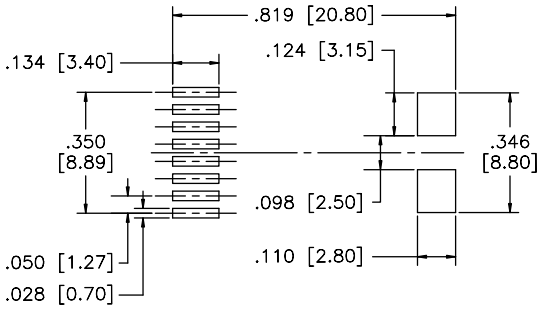


RECOMMENDED PCB LAYOUT

# RJE4N

VERTICAL, 2X4 PORT

## VERTICAL, 2X4 PORT

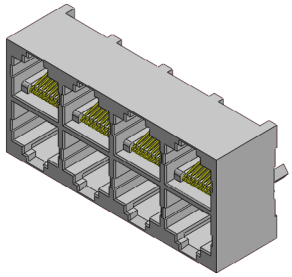

RJ45, vertical, multi-port connector in a 2x4 port configuration. Standard height profile available in both shielded and unshielded versions. Can be designed into various networking devices that require multiple ports and limited space.

## SPECIFICATIONS

### Material

| | |
|---|---|
| **Insulator:** | Engineering thermoplastic, complies with UL94V-0, Black colour |
| **Contacts:** | Phosphor bronze hard temper with gold thickness options (6µ", 15µ", 30µ", 50µ") over 50µ" min. nickel on contact mating area; 100µ" minimum Nickel on contact mating area<br>Gold flash on soldering tails |
| **Shield:** | Copper alloy with Nickel plating underplated |

### Mechanical

| | |
|---|---|
| **Insertion Force:** | 5 lbs max. |
| **Pull Retention Force:** | 20 lbs min. |
| **Durability:** | 750 mating & unmating cycles |
| **Operating Temperature:** | -55°C to + 85°C |
| **Soldering Temperature:** | Wave soldering peaked at 260°C for 5 seconds maximum |

### Electrical

| | |
|---|---|
| **Contact Resistance:** | 20 mΩ max. |
| **Insulation resistance:** | 500 MΩ min. at 500V DC for 2 mins max. |
| **Current Rating:** | 1.5 Amps per contact |
| **Voltage Rating:** | 125 Volts AC |
| **DWV:** | 1000 VAC, 60 Hz. 1 min. |

## ORDERING INFORMATION

RJE4N - 8 8 8 - X X 01

**Number of Ports**
8 - 8 Ports

**Number of Positions**
8 - 8 Positions

**Number of Contacts**
8 - 8 Contacts

**Shield Options**
0 - No shield
1 - Full Shield

**Modifier**
01- Standard Product

**Contact Plating**
1 - 6µ" gold plating
2 - 15µ" gold plating
3 - 30µ" gold plating
4 - 50µ" gold plating

**Didn't find what you were looking for?**
Please contact sales@amphenolcanada.com and let us know what you need.

Click to Return to Table for Contents

# RJE4N

VERTICAL, 2X4 PORT

## Eight Ports

**RJE4N-888-1X01**

### Shielded

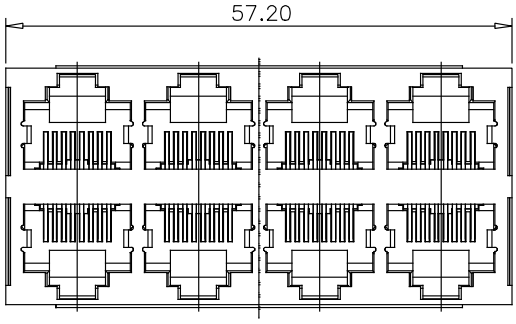


FRONT VIEW

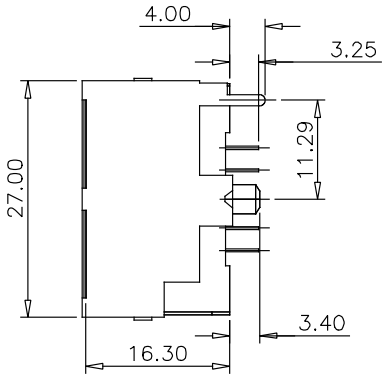


SIDE VIEW

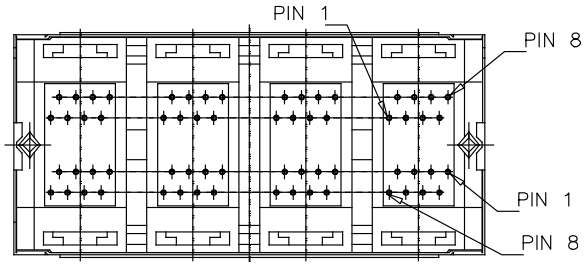


BOTTOM VIEW

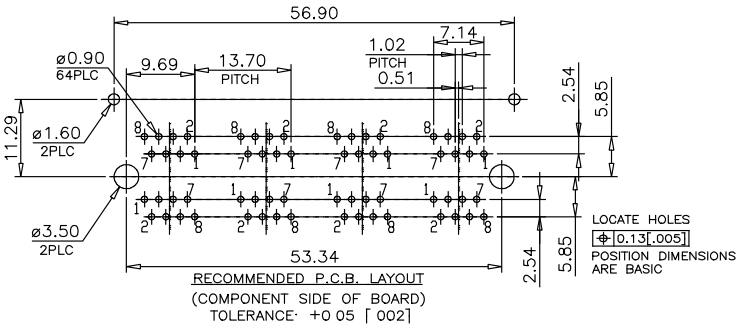


RECOMMENDED PCB LAYOUT

### *Notes*

# RJE36

RJ45 OVER USB

## RJ45 OVER USB

RJ 45 over USB 2.0 type. A unique series that combines two different types of connectors: RJ45 and USB connectors. Configurations include RJ45 over a single USB and RJ45 over two USBs. The RJ is available with or without LEDs for link activity and network verification. Full shield for superior EMI protection with EMI tabs options.

## SPECIFICATIONS

### Material

| | |
|---|---|
| **Insulator:** | Engineering thermoplastic; Complies with UL 94V-0; Black |
| **Contacts:** | Phosphor bronze hard temper with gold thickness options (6µ", 15µ", 30µ", 50µ") over 50µ" min. nickel on contact mating area; 100µ" min. matte tin plating on soldering tail |
| **Shield:** | Copper alloy plated with Nickel |
| **LED:** | Tin plating on LED tails |

### Mechanical

| | |
|---|---|
| **Insertion Force:** | 5 lbs max. |
| **Pull Retention Force:** | 20 lbs min. |
| **Durability:** | 750 mating & unmating cycles |
| **Recommended Soldering Temperature:** | Wave soldering peaked at 260°C for 5 secs max. |
| **Operating Temperature:** | -20°C to + 85°C |
| **UL File #:** | E136228 |

### Electrical

| | |
|---|---|
| **Contact Resistance:** | 20 mΩ max. |
| **Insulation resistance:** | 500 MΩ min. at 500V DC for 2 mins max. |
| **Current Rating:** | 1.5 Amps per contact |
| **Voltage Rating:** | 125 Volts AC |
| **DWV:** | Contact to contact: 1000 VAC, 60 Hz. 1 min. |
| **LED Forward DC Current:** | 20mA typical |
| **LED Forward Voltage:** | 1.6 -2.4 Volts max. at 2mA (for single colours) |
| **LED Reverse Voltage:** | 5 Volts min. |
| **LED Light Intensity:** | 2 to 12 mcd min. at 20mA (for single colours) |
| **LED Wave Length:** | Yellow: 590 ± 5 nm measured at 20mA<br>Green: 570 ± 5 nm measured at 20mA<br>Red: 650 ± 15 nm measured at 20mA |

## ORDERING INFORMATION

**RJE36 - 1 8 8 - X X X X**

**Number of Ports**
1 - 1 Port RJ45

**Number of Positions**
8 - 8 Positions

**Number of Contacts**
8 - 8 Contacts

**Shield Options**
0 - No shield
1 - Shield without top and side tabs, but with front tabs
2- Shield without top and side tabs
3 - Shield with top and side tabs

**Modifier**
3 - RJ45 over one USB 2.0
5 - RJ45 over two USB 3.0
7 - RJ45 over single USB 3.0

**LED Options**
Click to view page 3 for options

**Contact Plating**
1 - 6µ" gold plating
2 - 15µ" gold plating
3 - 30µ" gold plating
4 - 50µ" gold plating

**Didn't find what you were looking for?**
Please contact sales@amphenolcanada.com and let us know what you need.

# RJE36

RJ45 OVER USB

## Single Port

### Shielded

**RJE36-188-2X03**

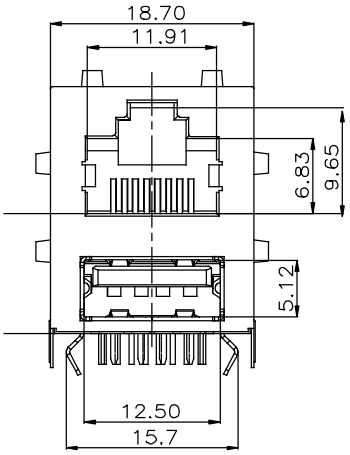


FRONT VIEW

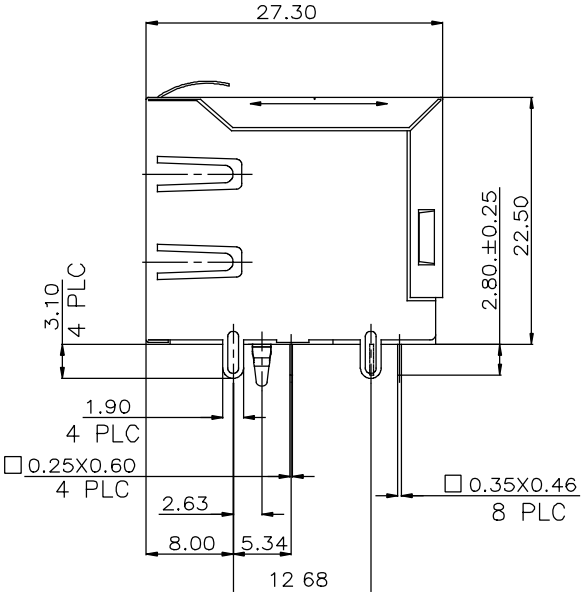


SIDE VIEW

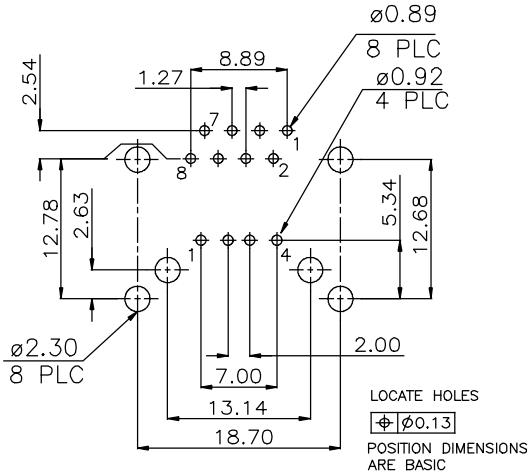


RECOMMENDED PCB LAYOUT

## Dual Port

### Shielded with LEDs

**RJE36-188-3XX5**

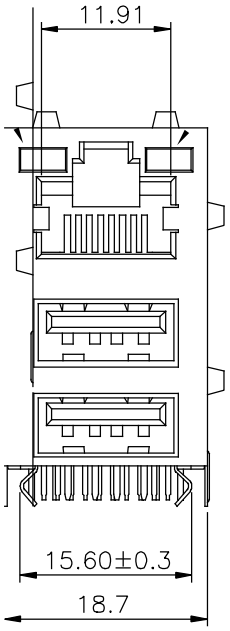


FRONT VIEW

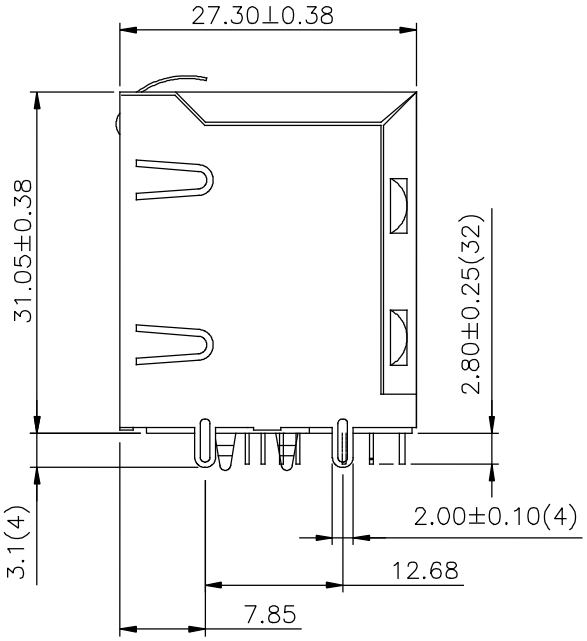


SIDE VIEW

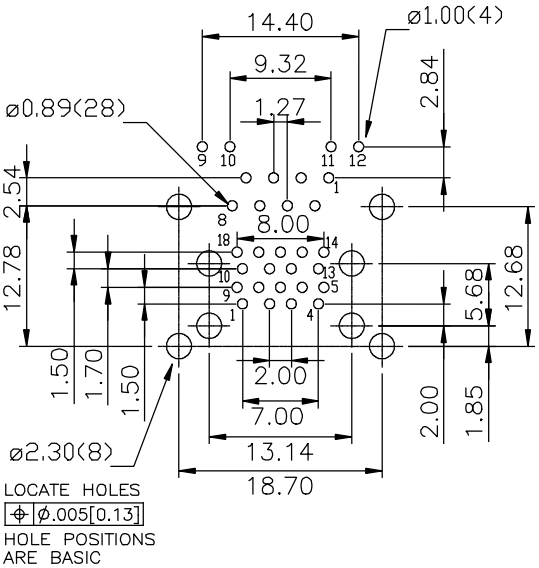


RECOMMENDED PCB LAYOUT

# RJSAE

2, 4 AND 8 PORTS WITH LED AND SHIELD OPTIONS

## 2, 4 AND 8 PORTS WITH LED AND SHIELD OPTIONS

The RJSAE is a RJ45 stackable connector that reduces component and labor costs by incorporating LEDs. Its stackable feature enables more ports with the same board space. With superior EMI performance, the option of configuring your connector with a ferrite filter is available to further reduce crosstalk in noisy applications.

## SPECIFICATIONS

### Material

| | |
|---|---|
| **Insulator:** | High temp. thermoplastic;<br>Complies with UL 94V-0; Black |
| **Contacts:** | Phosphor bronze hard temper with gold thickness options (6µ", 15µ", 30µ", 50µ") over 50µ" min. nickel on contact mating area; 100µ" min. matte tin plating on tail |
| **Shield:** | Copper alloy; nickel plated or stainless steel with tin dripped tail (as specified in drawing) |
| **LED:** | Tin plating on LED tail |

### Mechanical

| | |
|---|---|
| **Insertion Force:** | 5 lbs max. |
| **Pull Retention Force:** | 20 lbs min. |
| **Durability:** | 750 mating & unmating cycles |
| **Recommended Soldering Temperature:** | Wave soldering peaked at 260°C for 5 secs max. |
| **Operating Temperature:** | -55°C to + 85°C |
| **UL File #:** | E135615 |
| **CSA File #:** | 150190 |

*Note: Connectors without LEDs are suitable for IR Reflow; Connectors with Reflow LEDs available*

### Electrical

| | |
|---|---|
| **Contact Resistance:** | 20 mΩ max. |
| **Insulation resistance:** | 500 MΩ min. at 500V DC for 2 mins max. |
| **Current Rating:** | 1.5 Amps per contact |
| **Voltage Rating:** | 125 Volts AC |
| **DWV:** | Contact to contact: 1000 VAC, 60 Hz. 1 min. |
| **LED Forward DC Current:** | 20mA typical |
| **LED Forward Voltage:** | 1.9 Volts max. at 2mA (for single colours)<br>2.6 Volts max. at 2mA (for bicolours) |
| **LED Reverse Voltage:** | 5 Volts min. |
| **LED Light Intensity:** | 0.4 to 1.5 mcd min. at 2mA (for single colours)<br>0.5 mcd min. at 2mA (for bicolours) |
| **LED Wave Length:** | Yellow: 587 ± 7 nm measured at 20mA<br>Green: 565 ± 6 nm measured at 20mA<br>Red: 625 ± 5 nm measured at 20mA |

## ORDERING INFORMATION

RJSAE - X X X X - X X

**Version**
- 5 - 8 Positions, 50µ" gold plating
- 7 - 6 Positions, 50µ" gold plating
- 8 - 8 Positions over 6, 50µ" gold plating

**Shield Options**
- 0 - No shield
- 2 - Shield with top and side tabs, with filter
- 3 - Shield with top and side tabs, no filter
- F - Shield without top and side tabs

**Number of Contacts**
- 4 - 4 Contacts
- 6 - 6 Contacts
- 8 - 8 Contacts

**Number of Ports**
- 2 - 2 Ports (1 over 1)
- 4 - 4 Ports (2 over 2)
- 8 - 8 Ports (4 over 4)

**Contact Length**
- 0 - Standard 0.1" (2.54mm)
- A - 0.130" (3.30mm)
- B - 0.138" (3.51mm)

**LED Options**
- Click to view page 3 for options

**Didn't find what you were looking for?**
Please contact sales@amphenolcanada.com and let us know what you need.

Click to Return to Table of Contents

# RJSAE

2, 4 AND 8 PORTS WITH LED AND SHIELD OPTIONS

## Single Port

### Non-Shielded

**RJSAE-508X-02**

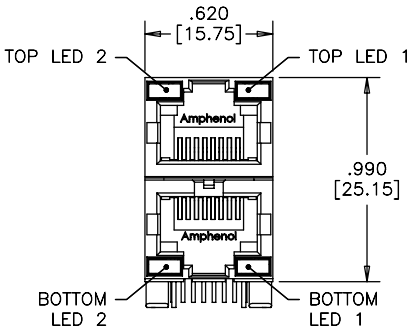


FRONT VIEW

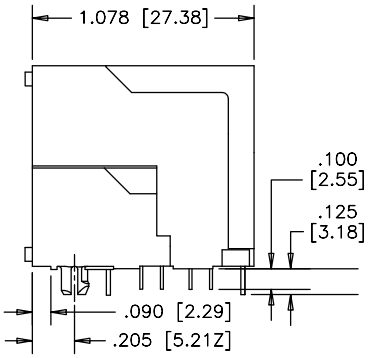


SIDE VIEW

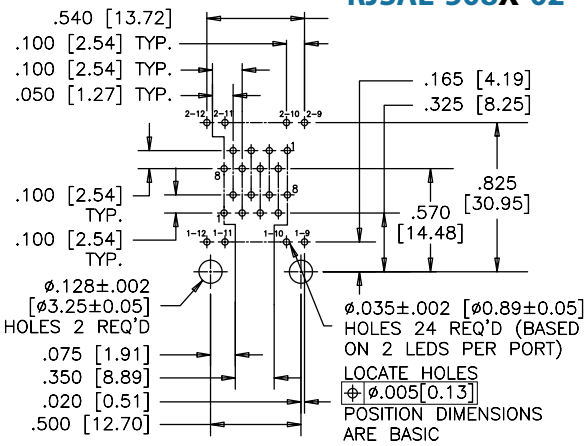


RECOMMENDED PCB LAYOUT

### Shielded

**RJSAE-538X-02**

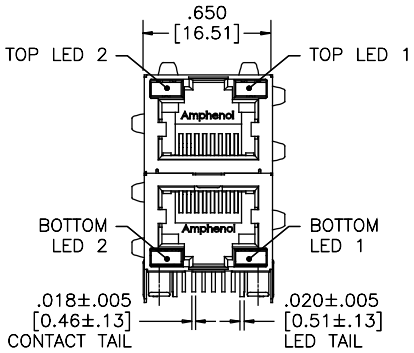


FRONT VIEW

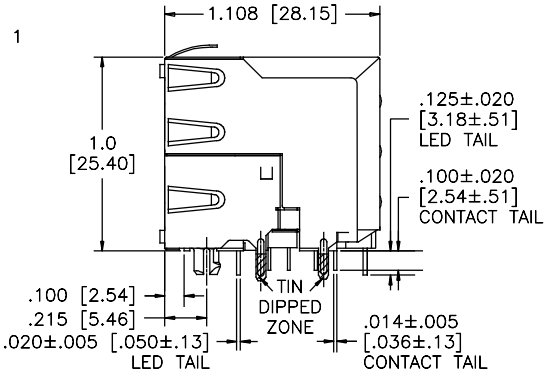


SIDE VIEW

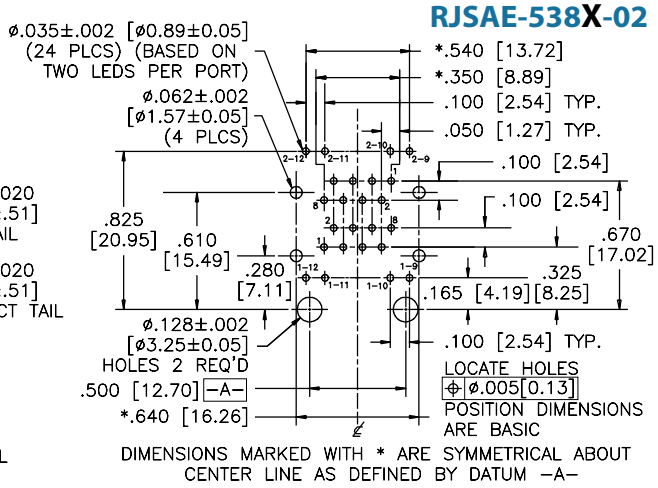


RECOMMENDED PCB LAYOUT

## Multi Port

### Non-Shielded

**RJSAE-508X-08**

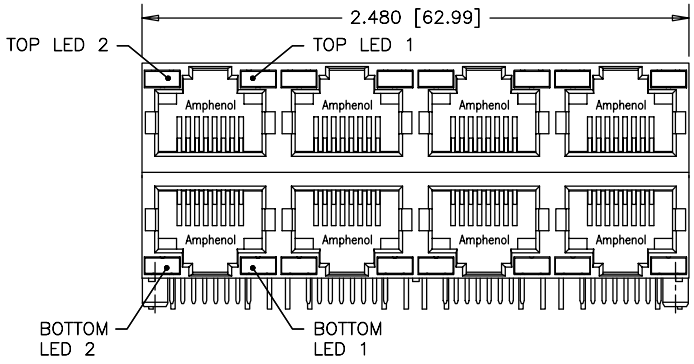


FRONT VIEW

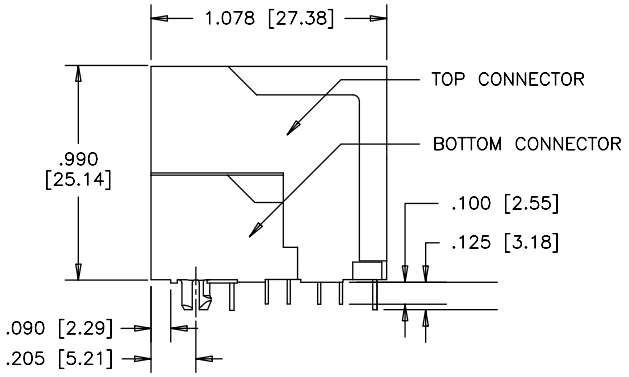


SIDE VIEW

# RJSAE

2, 4 AND 8 PORTS WITH LED AND SHIELD OPTIONS

## Multi Port

### Non-Shielded

**RJSAE-508X-08**

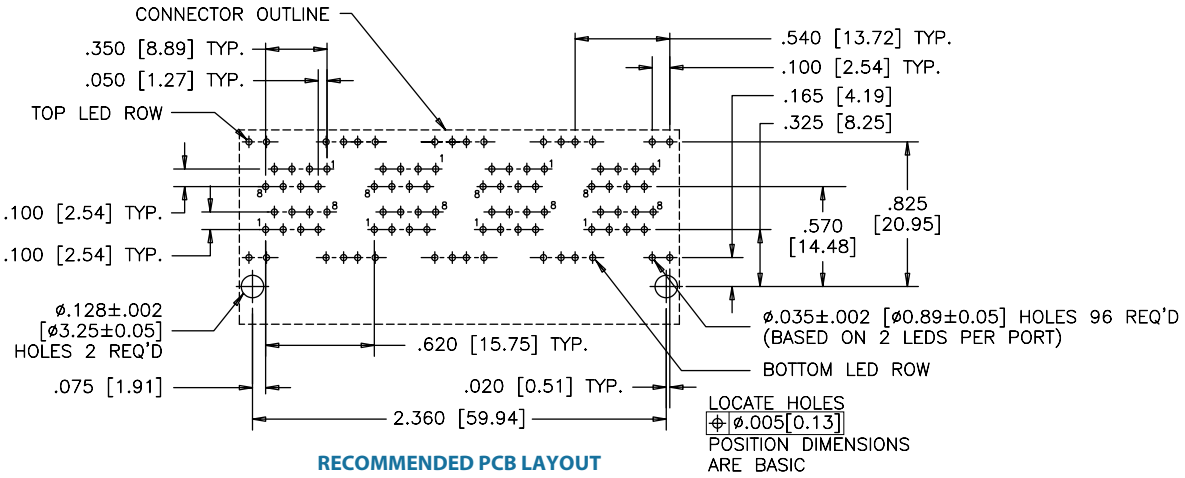


RECOMMENDED PCB LAYOUT

### Shielded

**RJSAE-538X-08**

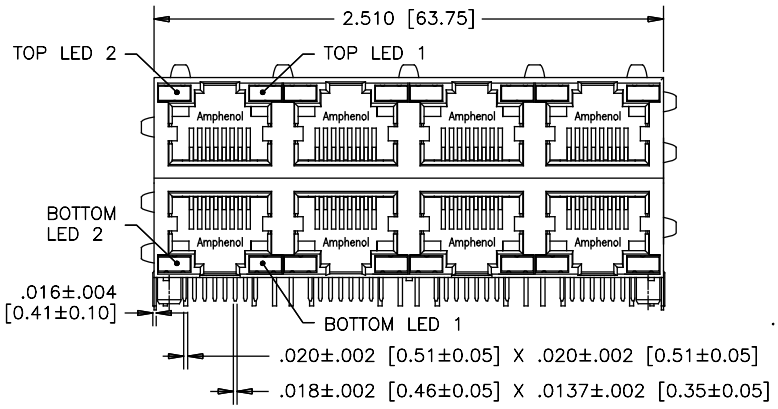


FRONT VIEW

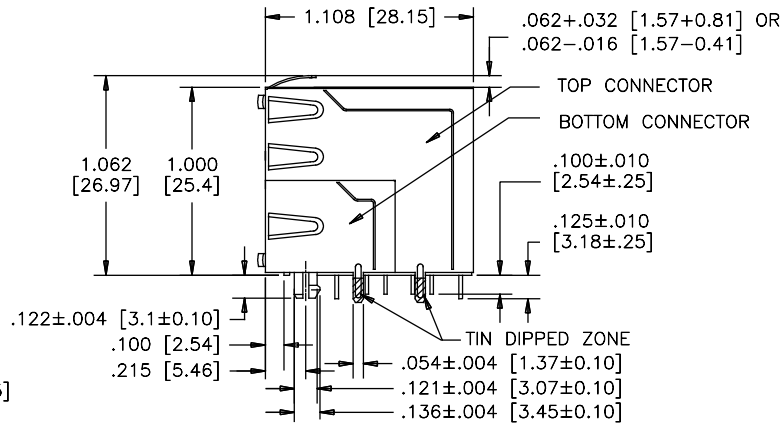


SIDE VIEW

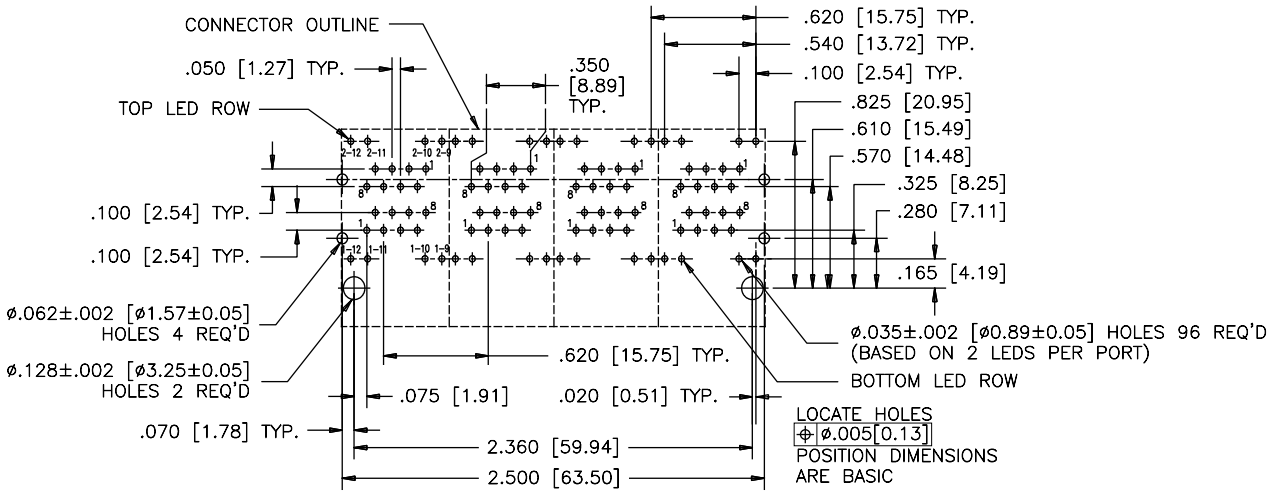


RECOMMENDED PCB LAYOUT


Amphenol Commercial Products - Amphenol Canada Corp. | Telephone: (416) 291-4401 | Fax: (416) 754-8668 | Email: sales@amphenolcanada.com
All specifications are subject to change without notice. Catalogue is updated regularly. Please refer to www.amphenolcanada.com for the most recent edition.

# RJSNE

4 OVER 4 PORTS WITH LED AND SHIELD OPTIONS

## 4 OVER 4 PORTS WITH LED AND SHIELD OPTIONS

The RJSNE series is a stacked connector that offers LED options for link activity and network verification. It is available with or without shielding. The RJSNE series also includes a unique inner shield device to reduce the crosstalk between top and bottom ports.

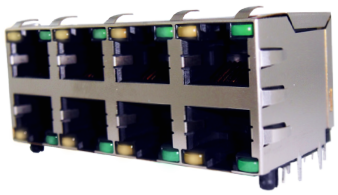

## SPECIFICATIONS

### Material

| | |
|---|---|
| **Insulator:** | Engineering thermoplastic; Complies with UL 94V-0; Black |
| **Contacts:** | Phosphor bronze hard temper with gold thickness options (6µ", 15µ", 30µ", 50µ") over 50µ" min. nickel on contact mating area; 100µ" min. matte tin plating on tail |
| **Shield:** | Copper alloy; nickel plated or stainless steel with tin dipped tail |
| **LED:** | Pure tin plating on LED tail |

### Mechanical

| | |
|---|---|
| **Insertion Force:** | 5 lbs max. |
| **Pull Retention Force:** | 20 lbs min. |
| **Durability:** | 750 mating & unmating cycles |
| **Recommended Soldering Temperature:** | Wave soldering peaked at 260°C for 5 secs max. |
| **Operating Temperature:** | -40°C to + 85°C |
| **UL File #:** | E135615 |
| **CSA File #:** | 150190 |

### Electrical

| | |
|---|---|
| **Contact Resistance:** | 20 mΩ max. |
| **Insulation resistance:** | 500 MΩ min. at 500V DC for 2 mins max. |
| **Current Rating:** | 1.5 Amps per contact |
| **Voltage Rating:** | 125 Volts AC |
| **DWV:** | 1000 VAC, 60 Hz. 1 min. |
| **LED Forward DC Current:** | 20mA typical |
| **LED Forward Voltage:** | 1.9 Volts max. at 2mA (for single colours)<br>2.6 Volts max. at 20mA (for bicolours) |
| **LED Reverse Voltage:** | 5 Volts min. |
| **LED Light Intensity:** | 0.4 to 1.5 mcd min. at 2mA (for single colours)<br>0.5 mcd min. at 2mA (for bicolours) |
| **LED Wave Length:** | Yellow: 587 ± 7 nm measured at 20mA<br>Green: 565 ± 6 nm measured at 20mA<br>Red: 625 ± 5 nm measured at 20mA |

## ORDERING INFORMATION

RJSNE - X X X X - X 8

**Version**
- 5 - 8 Positions, 50µ" gold plating
- D - 8 Positions, 6µ" gold plating
- G - 8 Positions, 15µ" gold plating
- J - 8 Positions, 30µ" gold plating

**Shield Options**
- 0 - No shield
- 3 - Shield with top and side tabs, no filter
- F - Shield without top and side tabs

**Number of Ports**
- 8 - 8 Ports (4 over 4)

**Contact Length**
- 0 - Standard 0.1" (2.54mm)
- A - 0.130" (3.30mm)

**LED Options**
- Click to view page 3 for options

**Number of Contacts**
- 4 - 4 Contacts
- 6 - 6 Contacts
- 8 - 8 Contacts

**Didn't find what you were looking for?**
Please contact sales@amphenolcanada.com and let us know what you need.

Click to Return to Table of Contents

# RJSNE

2, 4 AND 8 PORTS WITH LED AND SHIELD OPTIONS

## Single Port

**RJSNE-538X-X8**

### Non-Shielded

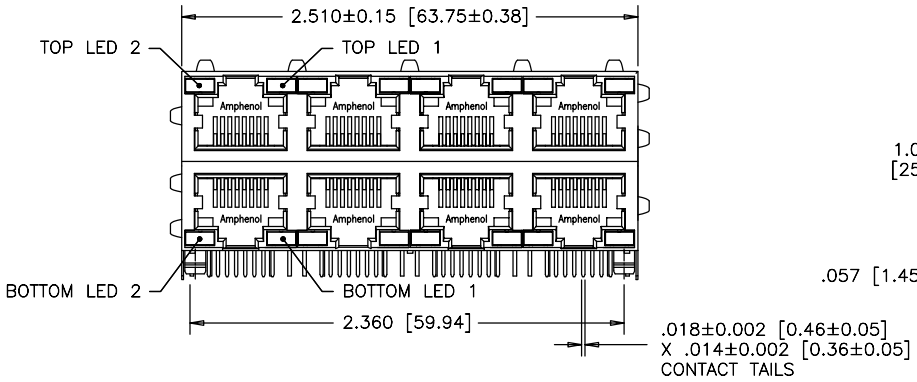


FRONT VIEW

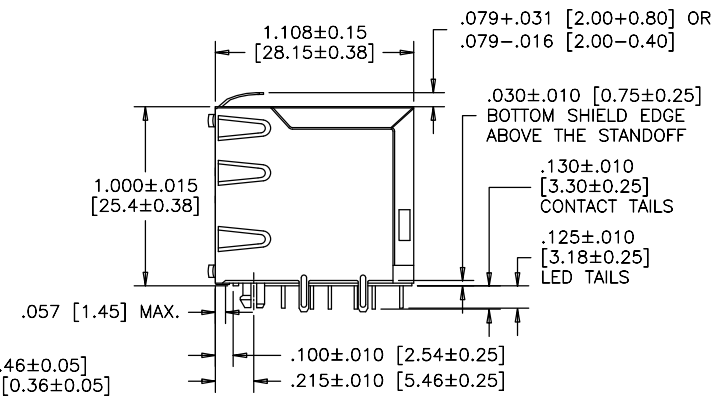


SIDE VIEW

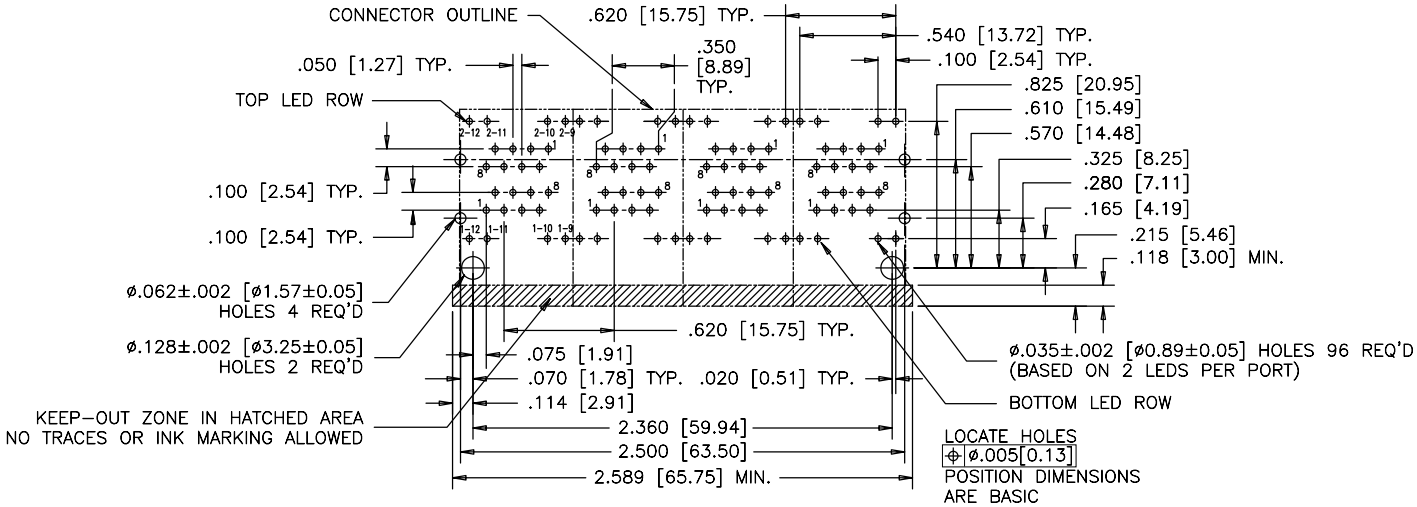


RECOMMENDED PCB LAYOUT

### *Notes*


Amphenol Commercial Products - Amphenol Canada Corp. | Telephone: (416) 291-4401 | Fax: (416) 754-8668 | Email: sales@amphenolcanada.com
All specifications are subject to change without notice. Catalogue is updated regularly. Please refer to www.amphenolcanada.com for the most recent edition.

# RJE48

CAT 5e, RIGHT ANGLE, LOW PROFILE, WITH LEDs

## RIGHT ANGLED, LOW PROFILE, WITH LEDs

The RJE48 series of modular jacks meet CAT 5e performance per EIA-568-C.2. It supports Gigabit Ethernet Protocols. Shielding is available for increased EMI performance and LEDs for link activity and network verification.

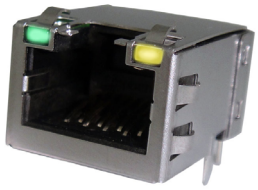

## SPECIFICATIONS

### Material

| | |
|---|---|
| **Insulator:** | High temp. thermoplastic;<br>Complies with UL 94V-0; Black |
| **Contacts:** | Phosphor bronze hard temper with gold thickness options (6µ", 15µ", 30µ", 50µ") over 50µ" min. nickel on contact mating area; 100µ" min. matte tin plating on solder tails |
| **Shield:** | Stainless steel with tin dipped tails |
| **LED:** | Tin plating on LED tail |

### Mechanical

| | |
|---|---|
| **Insertion Force:** | 5 lbs max. |
| **Pull Retention Force:** | 20 lbs min. |
| **Durability:** | 750 mating & unmating cycles |
| **Recommended Soldering Temperature:** | Wave soldering peaked at 260°C for 5 secs max. |
| **Operating Temperature:** | -55°C to + 85°C |
| **UL File Number:** | E135615 |

### Electrical

| | |
|---|---|
| **Contact Resistance:** | 20 mΩ max. |
| **Insulation resistance:** | 500 MΩ min. at 500V DC for 2 mins max. |
| **Current Rating:** | 1.25 Amps per contact |
| **Voltage Rating:** | 125 Volts AC |
| **DWV:** | 1000 VAC, 60 Hz. 1 min. |
| **LED Forward DC Current:** | 20mA typical |
| **LED Forward Voltage:** | 1.9 Volts max. at 2mA (for single colours)<br>2.6 Volts max. at 20mA (for bicolours) |
| **LED Reverse Voltage:** | 5 Volts min. |
| **LED Light Intensity:** | 0.4 to 1.5 mcd min. at 2mA (for single colours)<br>0.5 mcd min. at 2mA (for bicolours) |
| **LED Wave Length:** | Yellow: 587 ± 7 nm measured at 20mA<br>Green: 565 ± 6 nm measured at 20mA<br>Red: 625 ± 5 nm measured at 20mA |

## ORDERING INFORMATION

**RJE48 - X 8 8 - X X X 1 - X**

**Number of Ports**
- 1 - 1 Port
- 4 - 4 Port

**Number of Positions**
- 8 - 8 Positions

**Number of Contacts**
- 8 - 8 Contacts

**Shield Options**
- 0 - No shield
- 1 - Full shield with top and side tabs
- 3 - Full shield with top tabs only

**Packaging**
- Blank - Tray
- T - Tape & Reel

**Modifier**
- 1 - 3.00mm tail length

**LED Options**
- Click to view page 3 for options

**Contact Plating**
- 1 - 6µ" gold plating
- 2 - 15µ" gold plating
- 3 - 30µ" gold plating
- 4 - 50µ" gold plating

**Didn't find what you were looking for?**
Please contact sales@amphenolcanada.com and let us know what you need.

Click to Return to Table of Contents

# RJE48

CAT 5e, RIGHT ANGLE, LOW PROFILE, WITH LEDs

## Single Port

**RJE48-188-1XX1**

### Shielded

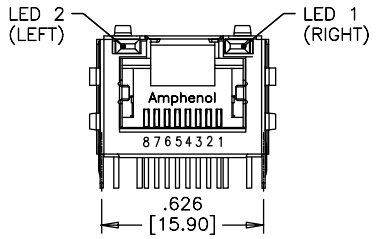


FRONT VIEW

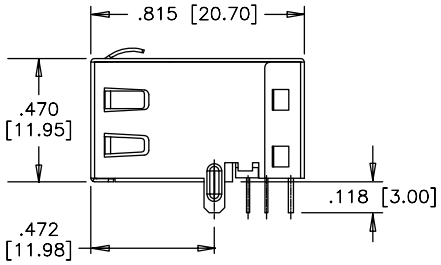


SIDE VIEW

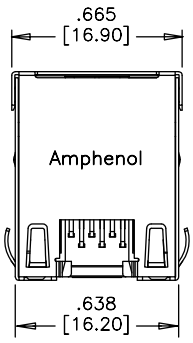


TOP VIEW

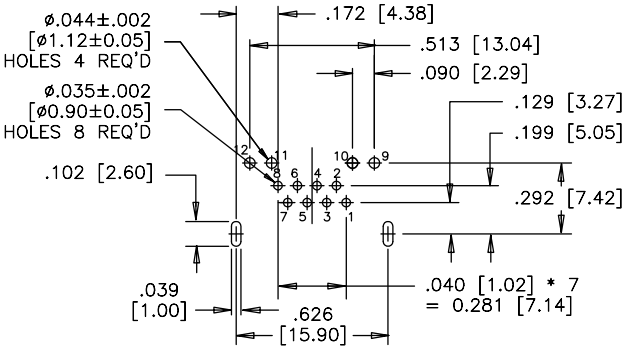


RECOMMENDED PCB LAYOUT

## Multi Port

**RJE48-488-1XX1**

### Shielded

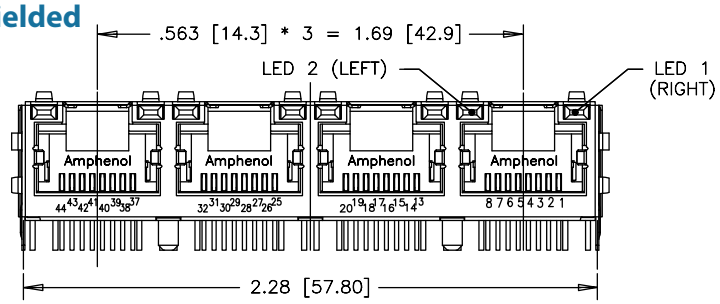


FRONT VIEW

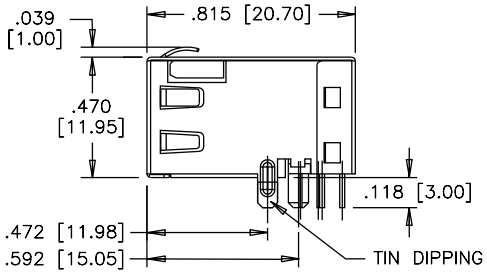


SIDE VIEW

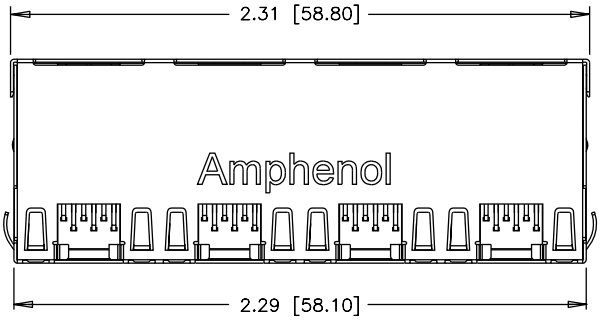


TOP VIEW

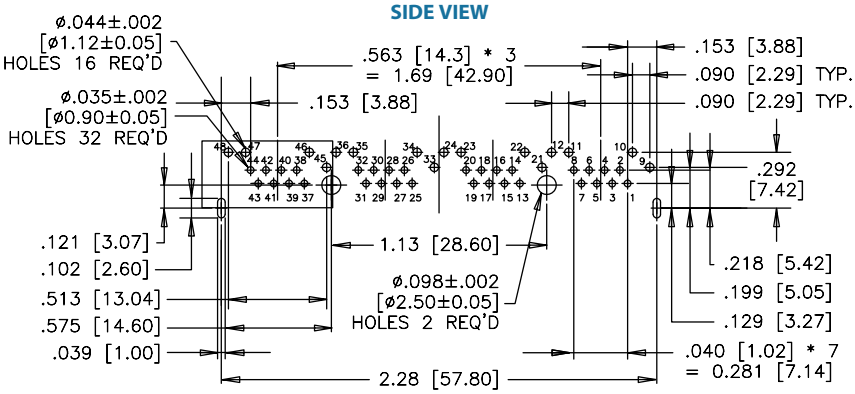


RECOMMENDED PCB LAYOUT


Amphenol Commercial Products - Amphenol Canada Corp. | Telephone: (416) 291-4401 | Fax: (416) 754-8668 | Email: sales@amphenolcanada.com
All specifications are subject to change without notice. Catalogue is updated regularly. Please refer to www.amphenolcanada.com for the most recent edition.

# RJE58

CAT 5e, RIGHT ANGLE, STANDARD PROFILE, WITH LEDs

## RIGHT ANGLED, STANDARD PROFILE, WITH LEDs

The RJE58 series of modular jacks meet CAT 5e performance per EIA-568-C.2. It supports Gigabit Ethernet Protocols. Shielding is available for increased EMI performance and LEDs for link activity and network speed verification.

## SPECIFICATIONS

### Material

| | |
|---|---|
| **Insulator:** | High temp. thermoplastic;<br>Complies with UL 94V-0; Black |
| **Contacts:** | Phosphor bronze hard temper with gold thickness options (6µ", 15µ", 30µ", 50µ") over 50µ" min. nickel on contact mating area; 100µ" min. matte tin plating on solder tails |
| **Shield:** | Stainless steel with tin dipped tails |
| **LED:** | Tin plating on LED tail |

### Mechanical

| | |
|---|---|
| **Insertion Force:** | 5 lbs max. |
| **Pull Retention Force:** | 20 lbs min. |
| **Durability:** | 750 mating & unmating cycles |
| **Recommended Soldering Temperature:** | Wave soldering peaked at 260°C for 10 secs. max, for one cycle with an LED defect rate of no more than 100 ppm |
| **Operating Temperature:** | -55°C to + 85°C |
| **UL File Number:** | E135615 |

### Electrical

| | |
|---|---|
| **Contact Resistance:** | 20 mΩ max. |
| **Insulation resistance:** | 500 MΩ min. at 500V DC for 2 mins max. |
| **Current Rating:** | 1.25 Amps per contact |
| **Voltage Rating:** | 125 Volts AC |
| **DWV:** | 1000 VAC, 60 Hz. 1 min. |
| **LED Forward DC Current:** | 20mA typical |
| **LED Forward Voltage:** | 1.9 Volts max. at 2mA (for single colours)<br>2.6 Volts max. at 20mA (for bicolours) |
| **LED Reverse Voltage:** | 5 Volts min. |
| **LED Light Intensity:** | 0.4 to 1.5 mcd min. at 2mA (for single colours)<br>0.5 mcd min. at 2mA (for bicolours) |
| **LED Wave Length:** | Yellow: 587 ± 7 nm measured at 20mA<br>Green: 565 ± 6 nm measured at 20mA<br>Red: 625 ± 5 nm measured at 20mA |

## ORDERING INFORMATION

RJE58 - 1 8 8 - X X X X - X

**Number of Ports**
1 - 1 Port

**Number of Positions**
8 - 8 Positions

**Number of Contacts**
8 - 8 Contacts

**Shield Options**
3 - Full shield with top tabs
5 - Full shield with top and side tabs
6 - Full shield without tabs

**Packaging**
Blank - Tray
T - Tape & Reel

**Modifier**
1 - Standard with boardlocks
2 - Without boardlocks

**LED Options**
Click to view page 3 for options

**Contact Plating**
1 - 6µ" gold plating
2 - 15µ" gold plating
3 - 30µ" gold plating
4 - 50µ" gold plating

**Didn't find what you were looking for?**
Please contact sales@amphenolcanada.com and let us know what you need.

# RJE58

CAT 5e, RIGHT ANGLE, STANDARD PROFILE, WITH LEDs

## Single Port

**RJE58-188-3XX1**

### Shielded - Option 3

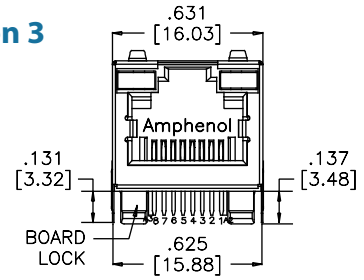


FRONT VIEW

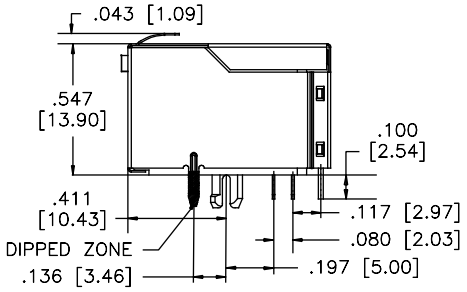


SIDE VIEW

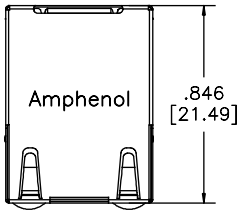


TOP VIEW

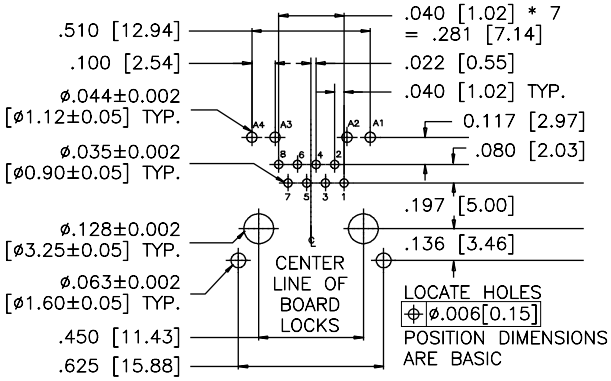


RECOMMENDED PCB LAYOUT

### Shielded - Option 5

**RJE58-188-5XX1**

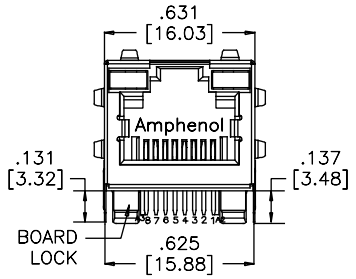


FRONT VIEW

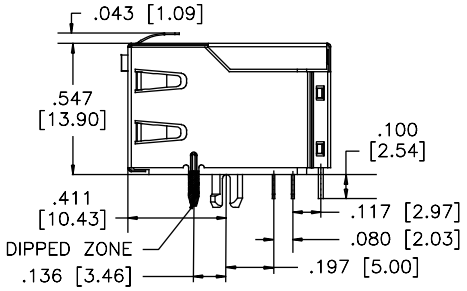


SIDE VIEW

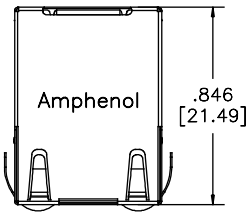


TOP VIEW

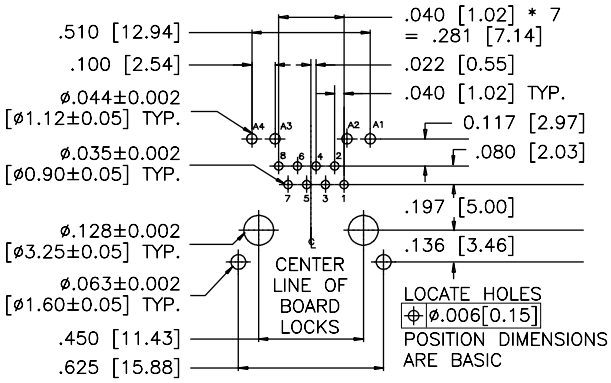


RECOMMENDED PCB LAYOUT


Amphenol Commercial Products - Amphenol Canada Corp. | Telephone: (416) 291-4401 | Fax: (416) 754-8668 | Email: sales@amphenolcanada.com
All specifications are subject to change without notice. Catalogue is updated regularly. Please refer to www.amphenolcanada.com for the most recent edition.

# RJE58

CAT 5e, RIGHT ANGLE, STANDARD PROFILE, WITH LEDs

## Single Port

### Shielded - Option 6

**RJE58-188-6XX1**

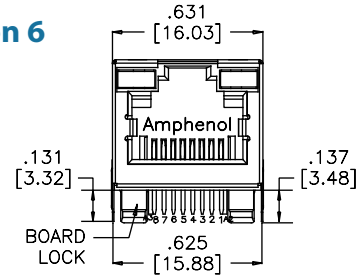


FRONT VIEW

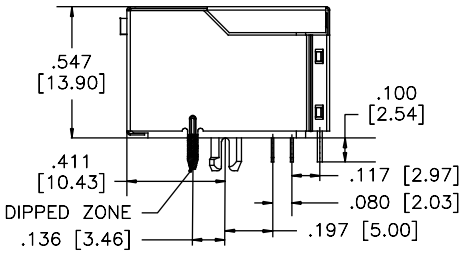


SIDE VIEW

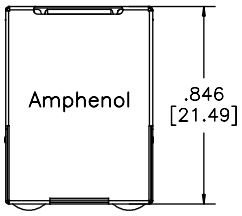


TOP VIEW

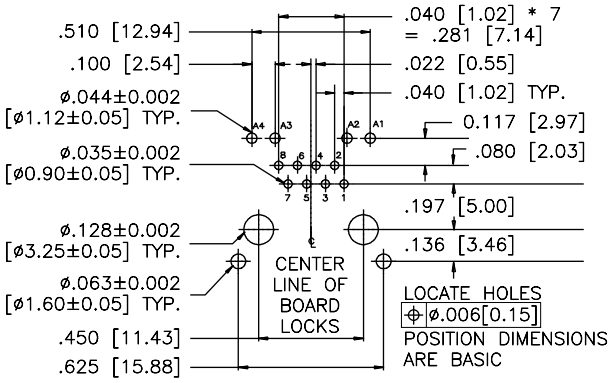


RECOMMENDED PCB LAYOUT

## *Notes*

# RJE72

CAT 5e, RIGHT ANGLE, RECESSED, LOW PROFILE WITH LEDs

## RIGHT ANGLE, RECESSED, LOW PROFILE WITH LEDs

The RJE72 series of modular jacks meet CAT 5e performance per EIA-568-C.2. It supports Gigabit Ethernet Protocols. Shielding available for increased EMI performance and LEDs for link activity and network speed verification.

## SPECIFICATIONS

### Material

| | |
|---|---|
| **Insulator:** | High temp. thermoplastic;<br>Complies with UL 94V-0; Black |
| **Contacts:** | Phosphor bronze hard temper with gold thickness options (6µ", 15µ", 30µ", 50µ") over 50µ" min. nickel on contact mating area; 100µ" min. matte tin plating on solder tails |
| **Shield:** | Stainless steel with tin dipped tails |
| **LED:** | Tin plating on LED tail |

### Mechanical

| | |
|---|---|
| **Insertion Force:** | 5 lbs max. |
| **Pull Retention Force:** | 20 lbs min. |
| **Durability:** | 750 mating & unmating cycles |
| **Recommended Soldering Temperature:** | Wave soldering peaked at 260°C for 5 secs max. |
| **Operating Temperature:** | -55°C to + 85°C |
| **UL file #:** | E135615 |

*Note: IR Reflow compatible; Consult factory for details*

### Electrical

| | |
|---|---|
| **Contact Resistance:** | 20 mΩ max. |
| **Insulation resistance:** | 500 MΩ min. at 500V DC for 2 mins max. |
| **Current Rating:** | 1.25 Amps per contact |
| **Voltage Rating:** | 125 Volts AC |
| **DWV:** | 1000 VAC, 60 Hz. 1 min. |
| **LED Forward DC Current:** | 20mA typical |
| **LED Forward Voltage:** | 1.9 Volts max. at 2mA (for single colours)<br>2.6 Volts max. at 20mA (for bicolours) |
| **LED Reverse Voltage:** | 5 Volts min. |
| **LED Light Intensity:** | 0.4 to 1.5 mcd min. at 2mA (for single colours)<br>0.5 mcd min. at 2mA (for bicolours) |
| **LED Wave Length:** | Yellow: 587 ± 7 nm measured at 20mA<br>Green: 565 ± 6 nm measured at 20mA<br>Red: 625 ± 5 nm measured at 20mA |

## ORDERING INFORMATION

RJE72 - X 8 8 - 1 X X X - X

**Number of Ports**
- 1 - 1 Port
- 4 - 4 Ports

**Number of Positions**
- 8 - 8 Positions

**Number of Contacts**
- 8 - 8 Contacts

**Shield Options**
- 1 - Full shield with top and side tabs

**Packaging**
- Blank - Tray
- T - Tape & Reel

**Modifier**
- 1 - 0.125" (3.18mm)
- 2 - 0.089" (2.27mm)
- 3 - 0.085" (2.16mm)

**LED Options**
- Click to view page 3 for options

**Contact Plating**
- 1 - 6µ" gold plating
- 2 - 15µ" gold plating
- 3 - 30µ" gold plating
- 4 - 50µ" gold plating

**Didn't find what you were looking for?**
Please contact sales@amphenolcanada.com and let us know what you need.

Click to Return to Table of Contents

# RJE72

CAT 5e, RIGHT ANGLE, RECESSED, LOW PROFILE WITH LEDs

## Single Port

**RJE72-188-14X1**

### Shielded

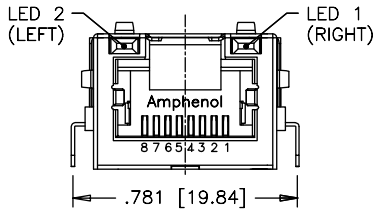


FRONT VIEW

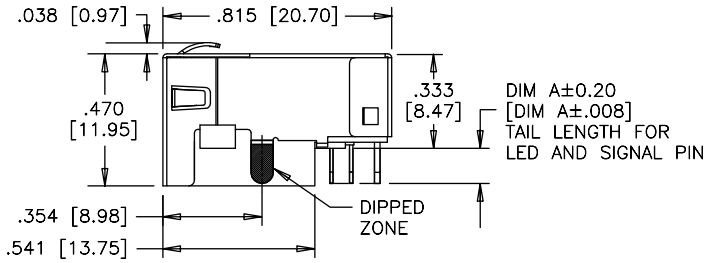


SIDE VIEW

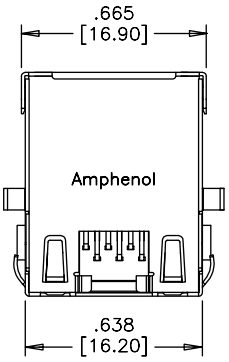


TOP VIEW

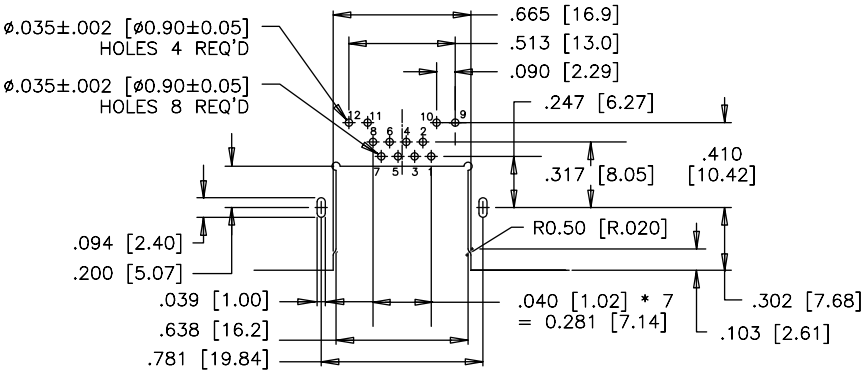


RECOMMENDED PCB LAYOUT

## Multi Port

**RJE72-488-14X1**

### Shielded

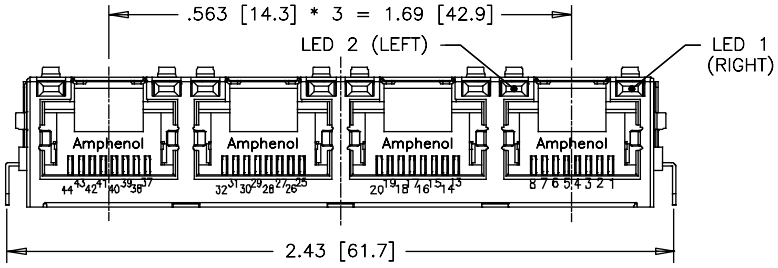


FRONT VIEW

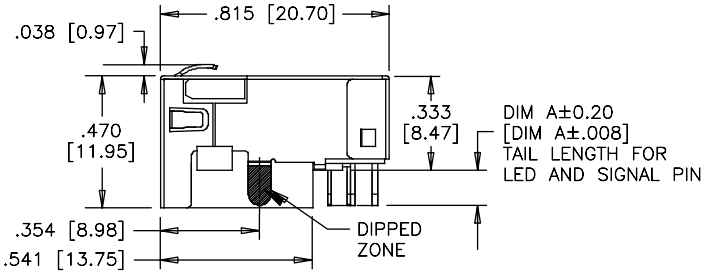


SIDE VIEW

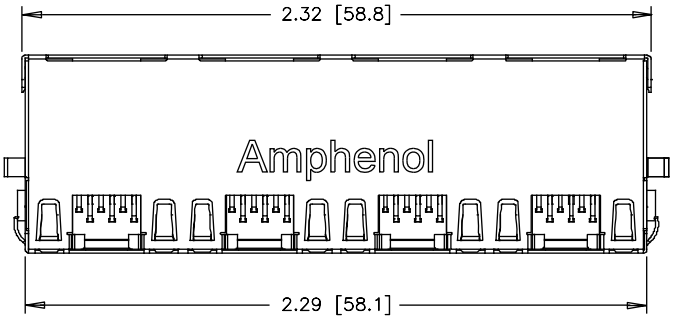


TOP VIEW

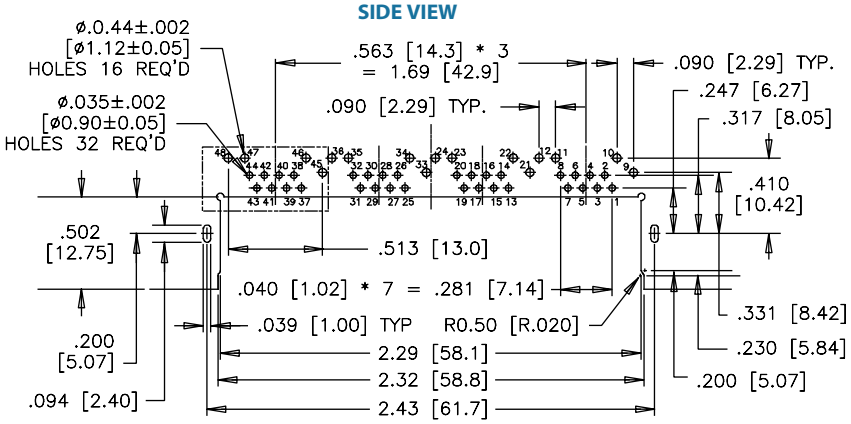


RECOMMENDED PCB LAYOUT

# RJSGE

CAT 5e, 2 OVER 2 PORTS, PRESS FIT, WITH LEDs

## 2 OVER 2 PORTS, PRESS FIT, WITH LEDs

The RJSGE series of modular jacks meet CAT 5e performance per EIA-568-C.2. It supports Gigabit Ethernet Protocols. Shielding available for increased EMI performance and LEDs for Link Activity and Network Speed verification.

## SPECIFICATIONS

### Material

| | |
|---|---|
| **Insulator:** | Engineering thermoplastic; Complies with UL 94V-0; Black |
| **Contacts:** | Phosphor bronze hard temper with gold thickness options (6µ", 15µ", 30µ", 50µ") over 50µ" min. nickel on contact mating area; 100µ" min. matte tin plating on solder tails |
| **Shield:** | Stainless steal with press-fit tails |
| **LED:** | Press-fit with tin plating on LED tails |

### Mechanical

| | |
|---|---|
| **Insertion Force:** | 5 lbs max. |
| **Pull Retention Force:** | 20 lbs min. |
| **Durability:** | 750 mating & unmating cycles |
| **Recommended Soldering Temperature:** | Wave soldering peaked at 260°C for 5 secs max. |
| **Operating Temperature:** | -55°C to + 85°C |
| **UL File Number:** | E135615 |

*Note: IR Reflow compatible; Consult factory for details*

### Electrical

| | |
|---|---|
| **Contact Resistance:** | 20 mΩ max. |
| **Insulation resistance:** | 500 MΩ min. at 500V DC for 2 mins max. |
| **Current Rating:** | 1.25 Amps per contact |
| **Voltage Rating:** | 125 Volts AC |
| **DWV:** | 1000 VAC, 60 Hz. 1 min. |
| **LED Forward DC Current:** | 20mA typical |
| **LED Forward Voltage:** | 1.9 Volts max. at 2mA (for single colours)<br>2.6 Volts max. at 20mA (for bicolours) |
| **LED Reverse Voltage:** | 5 Volts max. |
| **LED Light Intensity:** | 0.4 to 1.5 mcd min. at 2mA (for single colours)<br>0.5 mcd min. at 2mA (for bicolours) |
| **LED Wave Length:** | Yellow: 587 ± 7 nm measured at 20mA<br>Green: 570 ± 5 nm measured at 20mA<br>Red: 625 ± 5 nm measured at 20mA |

## ORDERING INFORMATION

RJSGE - 4 8 8 - X X X 1 - X

**Number of Ports**
4 - 2 over 2 Port

**Number of Positions**
8 - 8 Positions

**Number of Contacts**
8 - 8 Contacts

**Shield Options**
6 - Full shield without EMI tabs
7 - Full shield with EMI tabs

**Packaging**
Blank - Tray
T - Tape & Reel

**Modifier**
1 - Standard, black housing, 0.130" contact and LED tail length

**LED Options**
Click to view page 3 for options

**Contact Plating**
1 - 6µ" gold plating
2 - 15µ" gold plating
3 - 30µ" gold plating
4 - 50µ" gold plating

**Didn't find what you were looking for?**
Please contact sales@amphenolcanada.com and let us know what you need.

Click to return to Table of Contents


Amphenol Commercial Products - Amphenol Canada Corp. | Telephone: (416) 291-4401 | Fax: (416) 754-8668 | Email: sales@amphenolcanada.com
All specifications are subject to change without notice. Catalogue is updated regularly. Please refer to www.amphenolcanada.com for the most recent edition.

# RJSGE

CAT 5e, 2 OVER 2 PORTS, PRESS FIT, WITH LEDs

## Four Port

**RJSGE-488-6XX1**

### Shielded - with no EMI Tabs

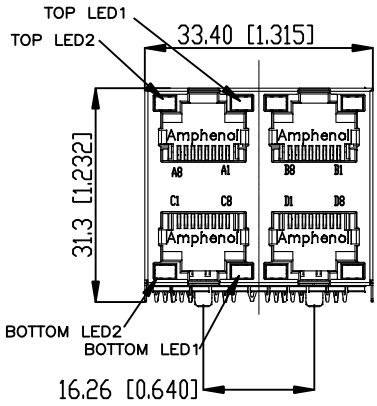


FRONT VIEW

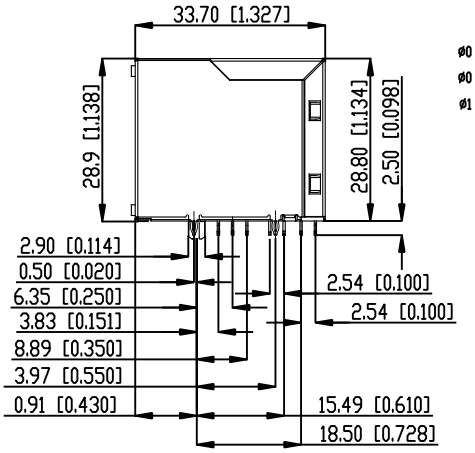


SIDE VIEW

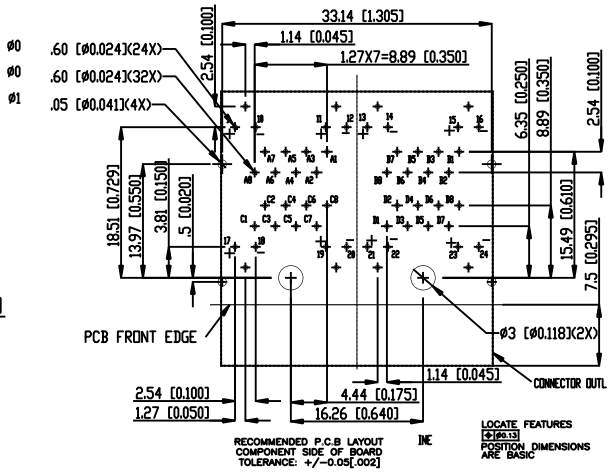


RECOMMENDED PCB LAYOUT

**Measurements**: mm [Inches]

### Shielded - with EMI Tabs

**RJSGE-488-7XX1**

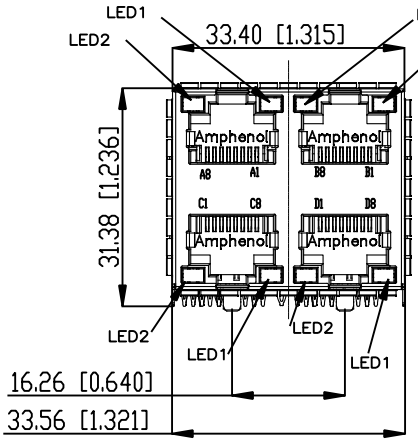


FRONT VIEW

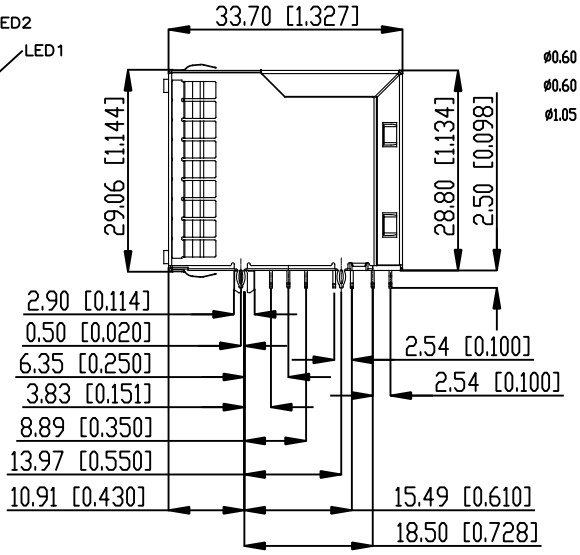


SIDE VIEW

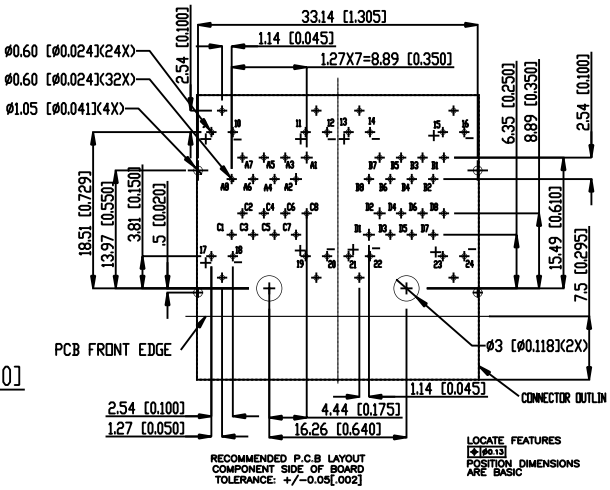


RECOMMENDED PCB LAYOUT

**Measurements:** mm [Inches]

# RJE45

CAT 6, SINGLE PORT, LOW PROFILE, WITH LEDs

## SINGLE PORT, LOW PROFILE, WITH LEDs

The RJE45 series of modular jacks meet CAT 6 performance per EIA-568-C.2. It supports Gigabit Ethernet Protocols and 10 Gig links in applications up to 50m. Shielding available for increased EMI performance and LEDs for link activity and network speed verification.

## SPECIFICATIONS

### Material

| | |
|---|---|
| **Insulator:** | High temp. thermoplastic; Complies with UL 94V-0; Black |
| **Contacts:** | Phosphor bronze hard temper with gold thickness options (6µ", 15µ", 30µ", 50µ") over 50µ" min. nickel on contact mating area; 100µ" min. matte tin plating on solder tails |
| **Shield:** | Stainless steel with tin dipped tails |
| **LED:** | Tin plating on LED tail |

### Mechanical

| | |
|---|---|
| **Insertion Force:** | 5 lbs max. |
| **Pull Retention Force:** | 20 lbs min. |
| **Durability:** | 750 mating & unmating cycles |
| **Recommended Soldering Temperature:** | Wave soldering peaked at 260°C for 5 secs max. or lead free reflow soldering up to 260°C for 10 secs for one cycle with an LED defect rate of no more than 1000ppm |
| **Operating Temperature:** | -55°C to + 85°C |
| **UL File Number:** | E135615 |

### Electrical

| | |
|---|---|
| **Contact Resistance:** | 20 mΩ max. |
| **Insulation resistance:** | 500 MΩ min. at 500V DC for 2 mins max. |
| **Current Rating:** | 1.25 Amps per contact |
| **Voltage Rating:** | 125 Volts AC |
| **DWV:** | 1000 VAC, 60 Hz. 1 min. |
| **LED Forward DC Current:** | 20mA typical |
| **LED Forward Voltage:** | 1.9 Volts max. at 2mA |
| **LED Reverse Voltage:** | 5 Volts min. |
| **LED Light Intensity:** | 0.4 to 1.5 mcd min. at 2mA |
| **LED Wave Length:** | Yellow: 587 ± 7 nm measured at 20mA<br>Green: 565 ± 6 nm measured at 20mA<br>Red: 625 ± 5 nm measured at 20mA |

*Note: Multiple exposures not recommended*

## ORDERING INFORMATION

RJE45 - 1 8 8 - X X X X - X

**Number of Ports**
1 - 1 Port

**Number of Positions**
8 - 8 Positions

**Number of Contacts**
8 - 8 Contacts

**Shield Options**
0 - No shield
1 - Full shield with top and bottom EMI tabs
2 - Full shield without EMI tabs, back PCB tabs
4 - Full shield without EMI tabs, front PCB tabs

**Packaging**
Blank - Tray
T - Tape & Reel

**Modifier**
1 - Standard, black housing, 0.130" contact and LED tail length
2 - Black housing, with flange, 0.130" contact and LED tail length

**LED Options**
Click to view page 3 for options

**Contact Plating**
1 - 6µ" gold plating
2 - 15µ" gold plating
3 - 30µ" gold plating
4 - 50µ" gold plating

**Didn't find what you were looking for?**
Please contact sales@amphenolcanada.com and let us know what you need.

# RJE45

CAT 6, SINGLE PORT, LOW PROFILE, WITH LEDs

## Single Port

### Non-Shielded

**RJE45-188-0X01**

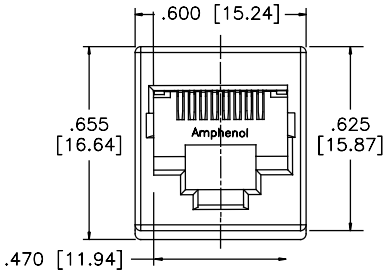


TOP VIEW

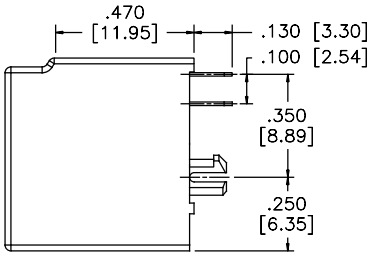


SIDE VIEW

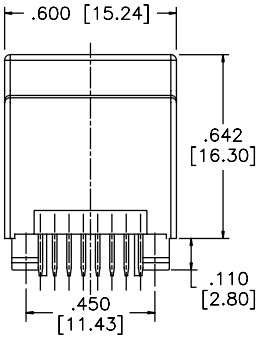


BACK VIEW

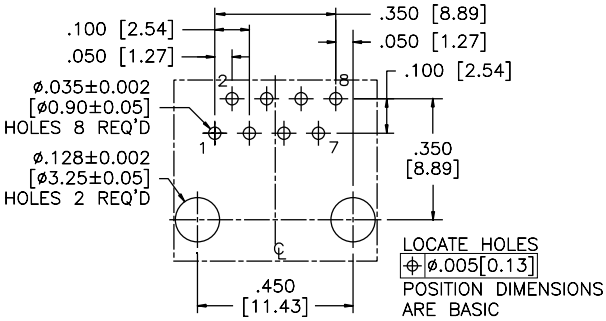


RECOMMENDED PCB LAYOUT

### Shielded

**RJE45-188-1XX1**

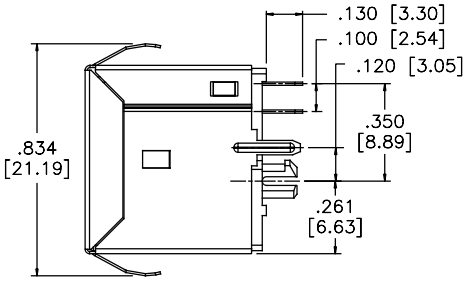


SIDE VIEW

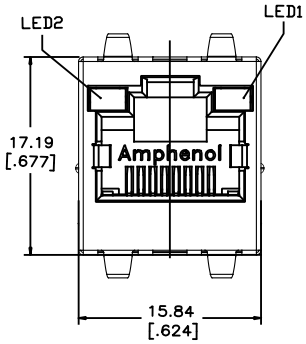


TOP VIEW

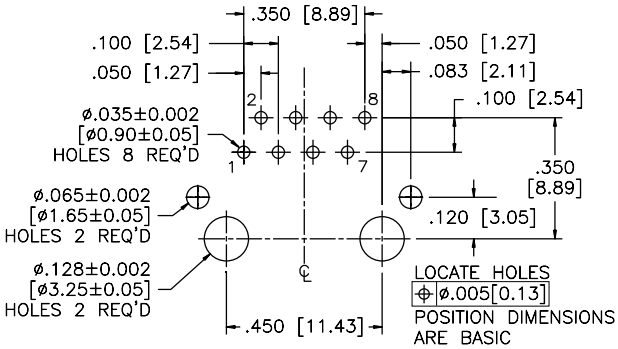


RECOMMENDED PCB LAYOUT

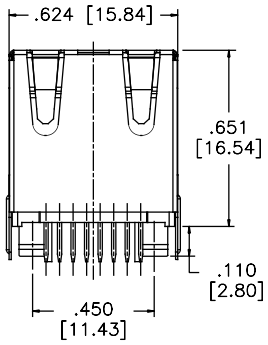


BACK VIEW

Click to Return to Table of Contents

# RJE49

CAT 6, RIGHT ANGLE, LOW PROFILE, WITH LEDs

## RIGHT ANGLE, LOW PROFILE, WITH LEDs

The RJE49 series of modular jacks meet CAT 6 performance per EIA-568-C.2. It supports Gigabit Ethernet Protocols. Shielding is available for increased EMI performance and LEDs for link activity and network verification.

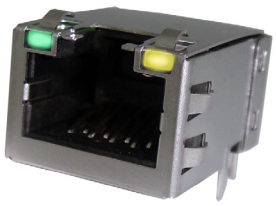

## SPECIFICATIONS

### Material

| | |
|---|---|
| **Insulator:** | High temp. thermoplastic;<br>Complies with UL 94V-0; Black |
| **Contacts:** | Phosphor bronze hard temper with gold thickness options (6µ", 15µ", 30µ", 50µ") over 50µ" min. nickel on contact mating area; 100µ" min. matte tin plating on solder tails |
| **Shield:** | Stainless steel with tin dipped tails |
| **LED:** | Tin plating on LED tail |

### Mechanical

| | |
|---|---|
| **Insertion Force:** | 5 lbs max. |
| **Pull Retention Force:** | 20 lbs min. |
| **Durability:** | 750 mating & unmating cycles |
| **Recommended Soldering Temperature:** | Wave soldering peaked at 260°C for 5 secs max. |
| **Operating Temperature:** | -55°C to + 85°C |
| **UL File Number:** | E135615 |

### Electrical

| | |
|---|---|
| **Contact Resistance:** | 20 mΩ max. |
| **Insulation resistance:** | 500 MΩ min. at 500V DC for 2 mins max. |
| **Current Rating:** | 1.25 Amps per contact |
| **Voltage Rating:** | 125 Volts AC |
| **DWV:** | 1000 VAC, 60 Hz. 1 min. |
| **LED Forward DC Current:** | 20mA typical |
| **LED Forward Voltage:** | 1.9 Volts max. at 2mA (for single colours)<br>2.6 Volts max. at 20mA (for bicolours) |
| **LED Reverse Voltage:** | 5 Volts min. |
| **LED Light Intensity:** | 0.4 to 1.5 mcd min. at 2mA (for single colours)<br>0.5 mcd min. at 2mA (for bicolours) |
| **LED Wave Length:** | Yellow: 587 ± 7 nm measured at 20mA<br>Green: 565 ± 6 nm measured at 20mA<br>Red: 625 ± 5 nm measured at 20mA |

## ORDERING INFORMATION

**RJE49 - 1 8 8 - X X X 1 - X**

**Number of Ports**
1 - 1 Port

**Number of Positions**
8 - 8 Positions

**Number of Contacts**
8 - 8 Contacts

**Shield Options**
0 - No shield
1 - Full shield with top and side tabs
3 - Full shield with top tabs only

**Packaging**
Blank - Tray
T - Tape & Reel

**Modifier**
1 - 3.00mm tail length

**LED Options**
Click to view page 3 for options

**Contact Plating**
1 - 6µ" gold plating
2 - 15µ" gold plating
3 - 30µ" gold plating
4 - 50µ" gold plating

**Didn't find what you were looking for?**
Please contact sales@amphenolcanada.com and let us know what you need.

Click to Return to Table of Contents

# RJE49

CAT 6, RIGHT ANGLE, LOW PROFILE, WITH LEDs

## Single Port

**RJE49-188-1XX1**

### Shielded

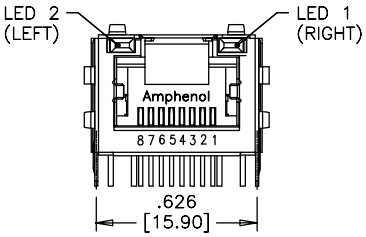


FRONT VIEW

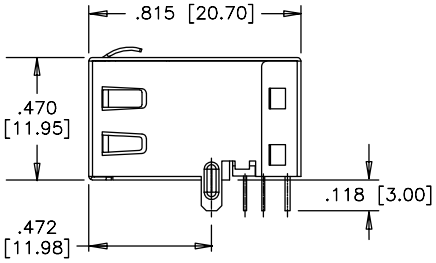


SIDE VIEW

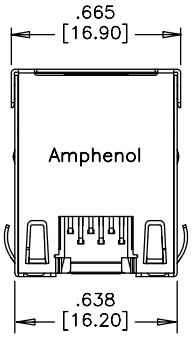


TOP VIEW

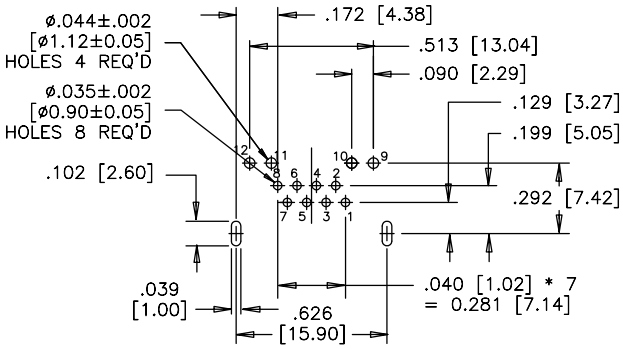


RECOMMENDED PCB LAYOUT

## Notes

# RJE59

CAT 6, RIGHT ANGLE, STANDARD PROFILE, WITH LEDs

## RIGHT ANGLE, STANDARD PROFILE, WITH LEDs

The RJE59 series of modular jacks meet CAT 6 performance per EIA-568-C.2. It supports Gigabit Ethernet Protocols. Shielding is available for increased EMI performance and LEDs for link activity and network speed verification.

## SPECIFICATIONS

### Material

| | |
|---|---|
| **Insulator:** | High temp. thermoplastic;<br>Complies with UL 94V-0; Black |
| **Contacts:** | Phosphor bronze hard temper with gold thickness options (6µ", 15µ", 30µ", 50µ") over 50µ" min. nickel on contact mating area; 100µ" min. matte tin plating on solder tails |
| **Shield:** | Stainless steel with tin dipped tails |
| **LED:** | Tin plating on LED tail |

### Mechanical

| | |
|---|---|
| **Insertion Force:** | 5 lbs max. |
| **Pull Retention Force:** | 20 lbs min. |
| **Durability:** | 750 mating & unmating cycles |
| **Recommended Soldering Temperature:** | Wave soldering peaked at 260°C for 10 secs max. for one cycle with an LED defect rate of no more than 100ppm |
| **Operating Temperature:** | -55°C to + 85°C |
| **UL File Number:** | E135615 |

*Note: multiple exposures not recommended; IR Reflow compatible version also available; Consult factory for details*

### Electrical

| | |
|---|---|
| **Contact Resistance:** | 20 mΩ max. |
| **Insulation resistance:** | 500 MΩ min. at 500V DC for 2 mins max. |
| **Current Rating:** | 1.25 Amps per contact |
| **Voltage Rating:** | 125 Volts AC |
| **DWV:** | 1000 VAC, 60 Hz. 1 min. |
| **LED Forward DC Current:** | 20mA typical |
| **LED Forward Voltage:** | 1.9 Volts max. at 2mA (for single colours)<br>2.6 Volts max. at 20mA (for bicolours) |
| **LED Reverse Voltage:** | 5 Volts min. |
| **LED Light Intensity:** | 0.4 to 1.5 mcd min. at 2mA (for single colours)<br>0.5 mcd min. at 2mA (for bicolours) |
| **LED Wave Length:** | Yellow: 587 ± 7 nm measured at 20mA<br>Green: 565 ± 6 nm measured at 20mA<br>Red: 625 ± 5 nm measured at 20mA |

## ORDERING INFORMATION

RJE59 - 1 8 8 - X X X X - X

**Number of Ports**
1 - 1 Port

**Number of Positions**
8 - 8 Positions

**Number of Contacts**
8 - 8 Contacts

**Shield Options**
3 - Full shield with top tabs
5 - Full shield with top and side tabs
6 - Full shield without tabs

**Packaging**
Blank - Tray
T - Tape & Reel

**Modifier**
1 - Standard with boardlocks
2 - Without boardlocks

**LED Options**
Click to view page 3 for options

**Contact Plating**
1 - 6µ" gold plating
2 - 15µ" gold plating
3 - 30µ" gold plating
4 - 50µ" gold plating

**Didn't find what you were looking for?**
Please contact sales@amphenolcanada.com and let us know what you need.


**Amphenol Commercial Products - Amphenol Canada Corp.** | **Telephone: (416) 291-4401** | **Fax: (416) 754-8668** | **Email:** sales@amphenolcanada.com
All specifications are subject to change without notice. Catalogue is updated regularly. Please refer to www.amphenolcanada.com for the most recent edition.

# RJE59

CAT 6, RIGHT ANGLE, STANDARD PROFILE, WITH LEDs

## Single Port

### Shielded - Option 3

**RJE59-188-3XX1**

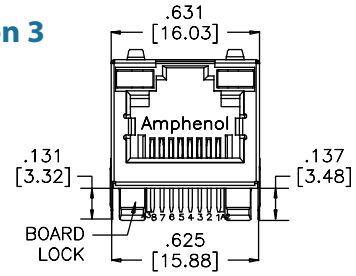


FRONT VIEW

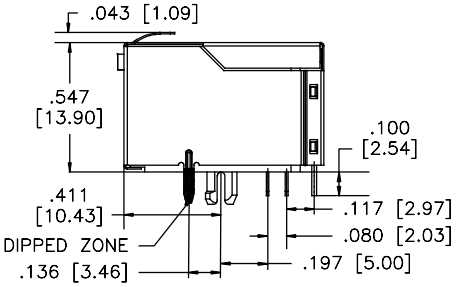


SIDE VIEW

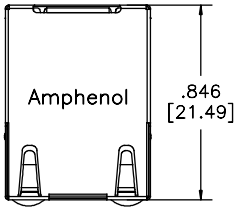


TOP VIEW

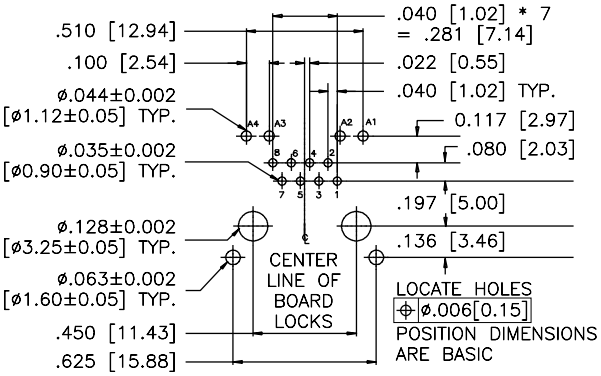


RECOMMENDED PCB LAYOUT

### Shielded - Option 5

**RJE59-188-5XX1**

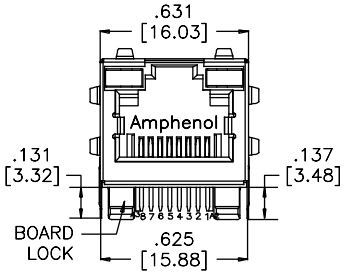


FRONT VIEW

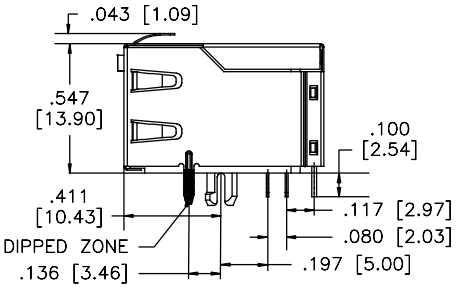


SIDE VIEW

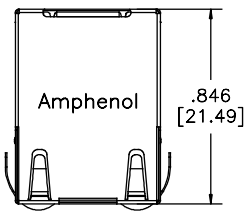


TOP VIEW

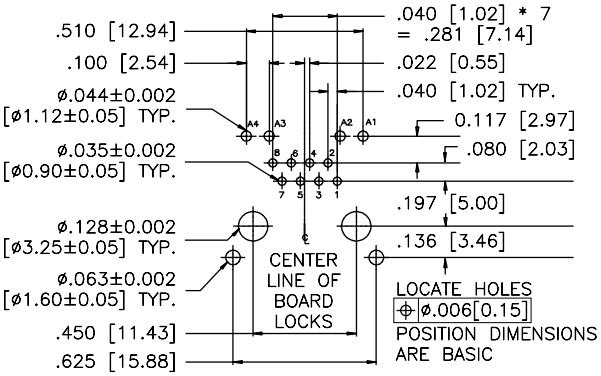


RECOMMENDED PCB LAYOUT

# RJE59

CAT 6, RIGHT ANGLE, STANDARD PROFILE, WITH LEDs

## Single Port

**RJE59-188-6XX1**

### Shielded - Option 6

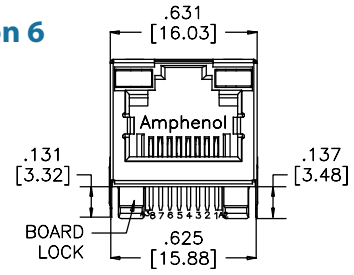


FRONT VIEW

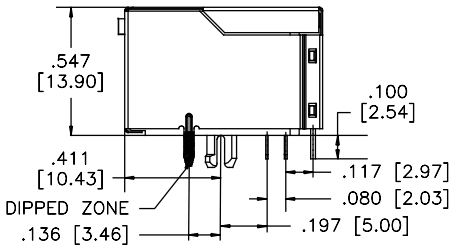


SIDE VIEW

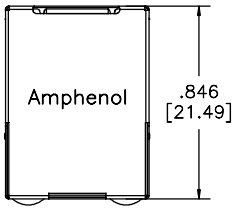


TOP VIEW

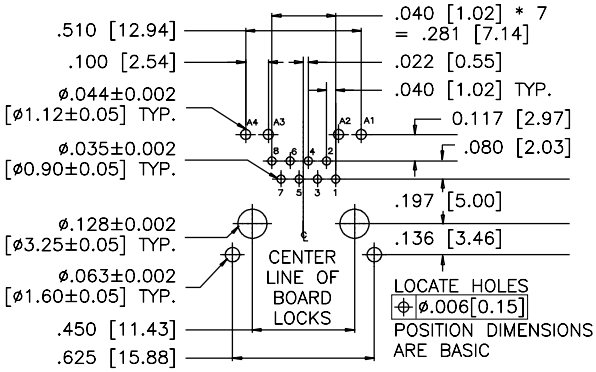


RECOMMENDED PCB LAYOUT

### *Notes*


**Amphenol Commercial Products - Amphenol Canada Corp.** | **Telephone: (416) 291-4401** | **Fax: (416) 754-8668** | **Email:** sales@amphenolcanada.com
All specifications are subject to change without notice. Catalogue is updated regularly. Please refer to www.amphenolcanada.com for the most recent edition.

# RJE71

CAT 6, RIGHT ANGLE, RECESSED, LOW PROFILE, WITH LEDs

## RIGHT ANGLED, RECESSED, LOW PROFILE, WITH LEDs

The RJE71 series of modular jacks meet CAT 6 performance per EIA-568-C.2. It supports Gigabit Ethernet Protocols. Shielding available for increased EMI performance and LEDs for link activity and network speed verification.

## SPECIFICATIONS

### Material

| | |
|---|---|
| **Insulator:** | High temp. thermoplastic;<br>Complies with UL 94V-0; Black |
| **Contacts:** | Phosphor bronze hard temper with gold thickness options (6µ", 15µ", 30µ", 50µ") over 50µ" min. nickel on contact mating area; 100µ" min. matte tin plating on solder tails |
| **Shield:** | Stainless steel with tin dipped tails |
| **LED:** | Tin plating on LED tail |

### Mechanical

| | |
|---|---|
| **Insertion Force:** | 5 lbs max. |
| **Pull Retention Force:** | 20 lbs min. |
| **Durability:** | 750 mating & unmating cycles |
| **Recommended Soldering Temperature:** | Wave soldering peaked at 260°C for 5 secs max. |
| **Operating Temperature:** | -55°C to + 85°C |
| **UL File:** | E135615 |

*Note: IR Reflow compatible version also available; Consult factory for details*

### Electrical

| | |
|---|---|
| **Contact Resistance:** | 20 mΩ max. |
| **Insulation resistance:** | 500 MΩ min. at 500V DC for 2 mins max. |
| **Current Rating:** | 1.25 Amps per contact |
| **Voltage Rating:** | 125 Volts AC |
| **DWV:** | 1000 VAC, 60 Hz. 1 min. |
| **LED Forward DC Current:** | 20mA typical |
| **LED Forward Voltage:** | 1.9 Volts max. at 2mA (for single colours)<br>2.6 Volts max. at 20mA (for bicolours) |
| **LED Reverse Voltage:** | 5 Volts min. |
| **LED Light Intensity:** | 0.4 to 1.5 mcd min. at 2mA (for single colours)<br>0.5 mcd min. at 2mA (for bicolours) |
| **LED Wave Length:** | Yellow: 587 ± 7 nm measured at 20mA<br>Green: 565 ± 6 nm measured at 20mA<br>Red: 625 ± 5 nm measured at 20mA |

## ORDERING INFORMATION

**RJE71 - X 8 8 - 1 X X X - X**

**Number of Ports**
- 1 - 1 Port
- 4 - 4 Ports

**Number of Positions**
- 8 - 8 Positions

**Number of Contacts**
- 8 - 8 Contacts

**Shield Options**
- 1 - Full shield with top and side tabs

**Packaging**
- Blank - Tray
- T - Tape & Reel

**Modifier**
- 1 - 0.125" (3.18mm)
- 2 - 0.089" (2.27mm)
- 3 - 0.085" (2.16mm)

**LED Options**
- Click to view page 3 for options

**Contact Plating**
- 1 - 6µ" gold plating
- 2 - 15µ" gold plating
- 3 - 30µ" gold plating
- 4 - 50µ" gold plating

**Didn't find what you were looking for?**
Please contact sales@amphenolcanada.com and let us know what you need.

Click to Return to Table of Contents

# RJE71

CAT 6, RIGHT ANGLE, RECESSED, LOW PROFILE, WITH LEDs

## Single Port

**RJE71-188-1XXX**

### Shielded

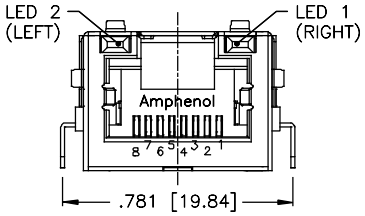


FRONT VIEW

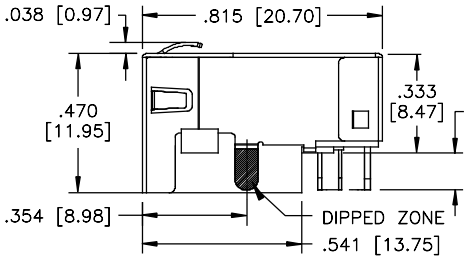


| Part Number | DIM A |
|---|---|
| RJE71–188–1XX1 | 0.125 [3.18] |
| RJE71–188–1XX2 | 0.089 [2.27] |
| RJE71–188–1XX3 | 0.085 [2.16] |

SIDE VIEW

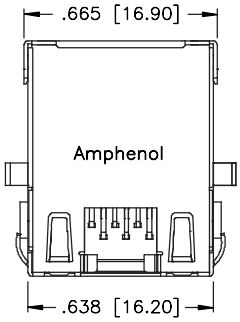


TOP VIEW

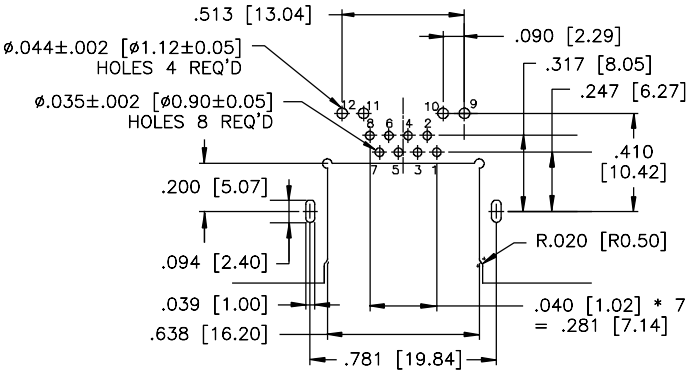


RECOMMENDED PCB LAYOUT

## Multi Port

**RJE71-488-1XX1**

### Shielded

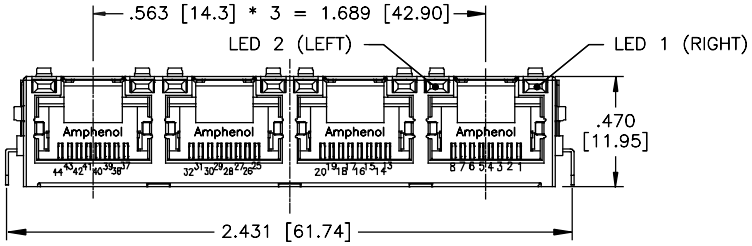


FRONT VIEW

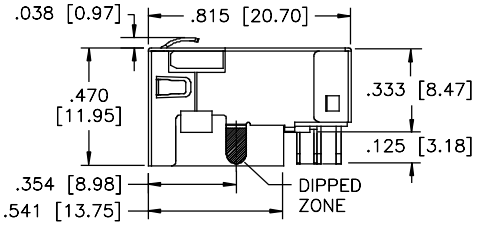


SIDE VIEW

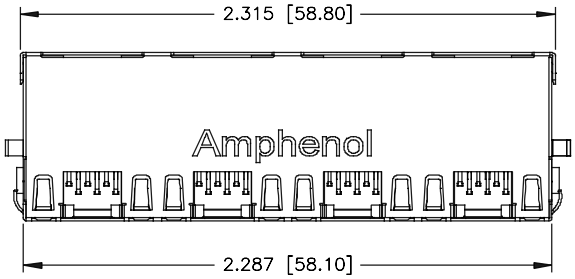


TOP VIEW

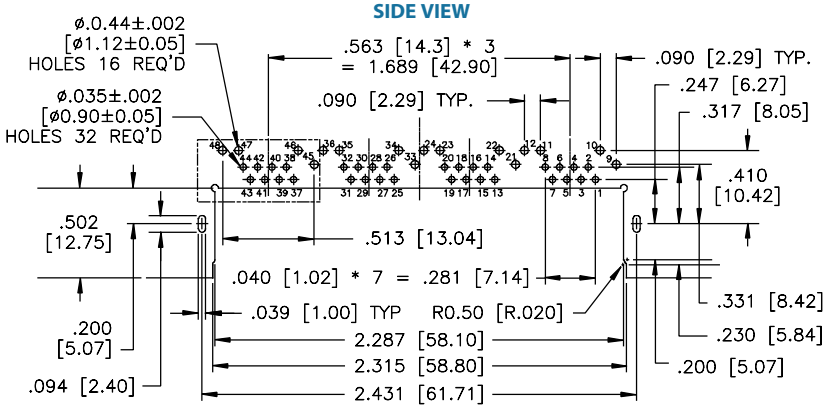


RECOMMENDED PCB LAYOUT

**Didn't find what you were looking for?**
Please contact sales@amphenolcanada.com and let us know what you need.


**Amphenol Commercial Products - Amphenol Canada Corp.** | **Telephone: (416) 291-4401** | **Fax: (416) 754-8668** | **Email:** sales@amphenolcanada.com
All specifications are subject to change without notice. Catalogue is updated regularly. Please refer to www.amphenolcanada.com for the most recent edition.

# RJE1R

CAT 5e/CAT 6, 1 OVER 1 PORT WITH LEDs

## CAT 5e, CAT 6, 1 OVER 1 PORT WITH LEDs

The RJE1R series is a unique 2x1 stacked connector. Two 8P8C ports with the option to choose from three different performances levels for each individual port: Cat5 equivalent, Cat5e, or Cat6. Each port will meet their designated performance as per EIA-568-C.2. Shielding available for increased EMI performance and LEDs for link activity and network speed verification.

## SPECIFICATIONS

### Material

| | |
|---|---|
| **Insulator:** | High temp. thermoplastic;<br>Complies with UL 94V-0; Black |
| **Contacts:** | Phosphor bronze hard temper with gold thickness options (6µ", 15µ", 30µ", 50µ") over 50µ" min. nickel on contact mating area; 100µ" min. matte tin plating on solder tails |
| **Shield:** | Stainless steel with tin dipped tails |
| **LED:** | Tin plating on LED tails |

### Mechanical

| | |
|---|---|
| **Insertion Force:** | 5 lbs max. |
| **Pull Retention Force:** | 20 lbs min. |
| **Durability:** | 750 mating & unmating cycles |
| **Recommended Soldering Temperature:** | IR reflow peaked at 260°C for 5 to 8 secs. |
| **Operating Temperature:** | -55°C to + 85°C |

### Electrical

| | |
|---|---|
| **Contact Resistance:** | 20 mΩ max. |
| **Insulation resistance:** | 500 MΩ min. at 500V DC for 2 mins max. |
| **Current Rating:** | 1.25 Amps per contact |
| **Voltage Rating:** | 125 Volts AC |
| **DWV:** | 1000 VAC, 60 Hz. 1 min. |
| **LED Forward DC Current:** | 20mA typical |
| **LED Forward Voltage:** | 1.9 Volts max. at 2mA (for single colours)<br>2.6 Volts max. at 20mA (for bicolours) |
| **LED Reverse Voltage:** | 5 Volts min. |
| **LED Light Intensity:** | 0.4 to 1.5 mcd min. at 2mA (for single colours)<br>0.5 mcd min. at 2mA (for bicolours) |
| **LED Wave Length:** | Yellow: 587 ± 7 nm measured at 20mA<br>Green: 565 ± 6 nm measured at 20mA<br>Red: 625 ± 5 nm measured at 20mA |
| **UL File Number:** | E135615 |

*Note: IR Reflow is not recommended for connectors with LEDs*

## ORDERING INFORMATION

**RJE1R - 2 8 8 - X X X X - X X**

**Number of Ports**
2 - 1 over 1 ports

**Number of Contacts (Top)**
8 - 8 Contacts

**Number of Contacts (Bottom)**
8 - 8 Contacts

**Top Port Category Options**
1 - CAT 5
2 - CAT 5e
3 - CAT 6

**Bottom Port Category Options**
1 - CAT 5
2 - CAT 5e
3 - CAT 6

**Contact Tail Length**
1 - 3.60mm
2 - 3.20mm
3 - 2.80mm

**LED Options**
Click to view page 3 for options

**Contact Plating**
1 - 6µ" gold plating
2 - 15µ" gold plating
3 - 30µ" gold plating
4 - 50µ" gold plating

**Shield Options**
0 - No Shield
3 - Full shield with top tabs only
5 - Full shield with top and side tabs
6 - Full shield with no tabs

# RJE1R

CAT 5e/CAT 6, 1 OVER 1 PORT WITH LEDs

## One Over One Port

**RJE1R-288-XX3X-XX**

### Shielded

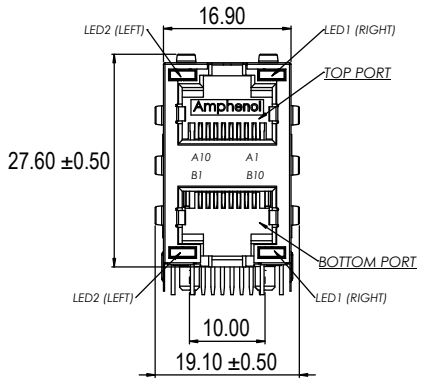


FRONT VIEW

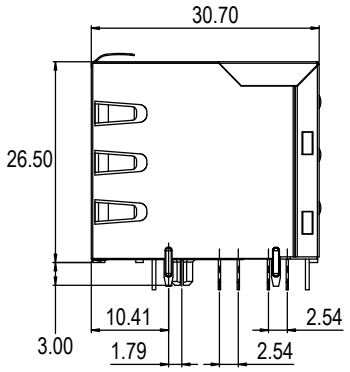


SIDE VIEW

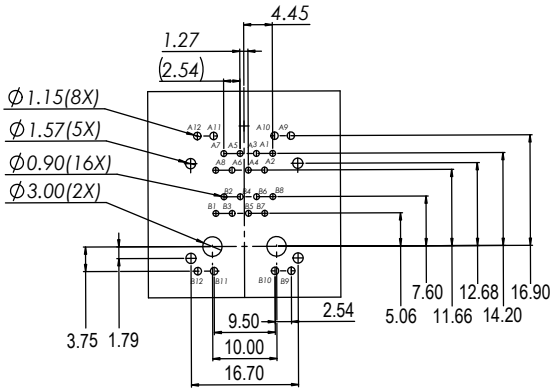


RECOMMENDED PCB LAYOUT

**Measurements:** mm

### *Notes*

**Didn't find what you were looking for?**
Please contact sales@amphenolcanada.com and let us know what you need.


**Amphenol Commercial Products - Amphenol Canada Corp.** | **Telephone: (416) 291-4401** | **Fax: (416) 754-8668** | **Email:** sales@amphenolcanada.com
All specifications are subject to change without notice. Catalogue is updated regularly. Please refer to www.amphenolcanada.com for the most recent edition.

# RJE4A

CAT 6A, SINGLE PORT, LOW PROFILE, WITH LEDs

## VERTICAL, LOW PROFILE, WITH LEDs

The RJE4A series of modular jacks meet CAT 6A performance per EIA-568-C.2. It supports Gigabit Ethernet Protocols. Shielding available for increased EMI performance and LEDs for link activity and network speed verification.

## SPECIFICATIONS

### Material

| | |
|---|---|
| **Insulator:** | High temp. thermoplastic;<br>Complies with UL 94V-0; Black |
| **Contacts:** | Phosphor bronze hard temper with gold thickness options (6µ", 15µ", 30µ", 50µ") over 50µ" min. nickel on contact mating area; 100µ" min. matte tin plating on solder tails |
| **Shield:** | Stainless steel with tin dipped tails |
| **LED:** | Tin plating on LED tail |

### Mechanical

| | |
|---|---|
| **Insertion Force:** | 5 lbs max. |
| **Pull Retention Force:** | 20 lbs min. |
| **Durability:** | 750 mating & unmating cycles |
| **Recommended Soldering Temperature:** | Wave soldering peaked at 260°C for 5 secs max. or lead free reflow soldering up to 260°C for 10 secs for one cycle with an LED defect rate of no more than 1000ppm |
| **Operating Temperature:** | -55°C to + 85°C |
| **UL File Number:** | E135615 |

*Note: Multiple exposures not recommended*

### Electrical

| | |
|---|---|
| **Contact Resistance:** | 20 mΩ max. |
| **Insulation resistance:** | 500 MΩ min. at 500V DC for 2 mins max. |
| **Current Rating:** | 1.25 Amps per contact |
| **Voltage Rating:** | 125 Volts AC |
| **DWV:** | 1000 VAC, 60 Hz. 1 min. |
| **LED Forward DC Current:** | 20mA typical |
| **LED Forward Voltage:** | 1.9 Volts max. at 2mA (for single colours)<br>2.6 Volts max. at 20mA (for bicolours) |
| **LED Reverse Voltage:** | 5 Volts min. |
| **LED Light Intensity:** | 0.4 to 1.5 mcd min. at 2mA (for single colours)<br>0.5 mcd min. at 2mA (for bicolours) |
| **LED Wave Length:** | Yellow: 587 ± 7 nm measured at 20mA<br>Green: 565 ± 6 nm measured at 20mA<br>Red: 625 ± 5 nm measured at 20mA |

## ORDERING INFORMATION

RJE4A - 1 8 8 - X X X 1 - X

**Number of Ports**
1 - 1 Port

**Number of Positions**
8 - 8 Positions

**Number of Contacts**
8 - 8 Contacts

**Shield Options**
0 - No shield
1 - Full shield with top and bottom EMI tabs
2 - Full shield without EMI tabs, back PCB tabs
4 - Full shield without EMI tabs, front PCB tabs

**Packaging**
Blank - Tray
T - Tape & Reel

**Modifier**
1 - Standard, black housing, 0.130" contact and LED tail length

**LED Options**
Click to view page 3 for options

**Contact Plating**
1 - 6µ" gold plating
2 - 15µ" gold plating
3 - 30µ" gold plating
4 - 50µ" gold plating

Click to Return to Table of Contents

# RJE4A

CAT 6A, SINGLE PORT, LOW PROFILE, WITH LEDs

## Single Port

### Non-Shielded

**RJE4A-188-0X01**

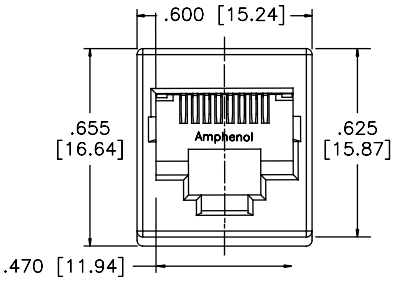


TOP VIEW

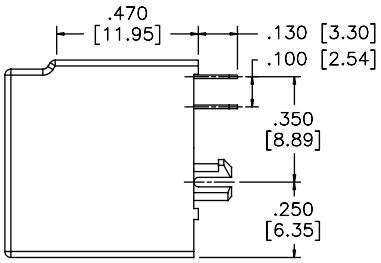


SIDE VIEW

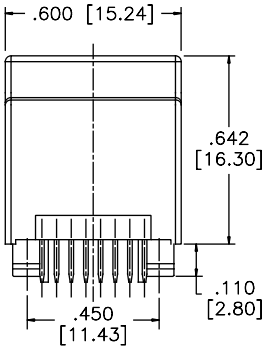


BACK VIEW

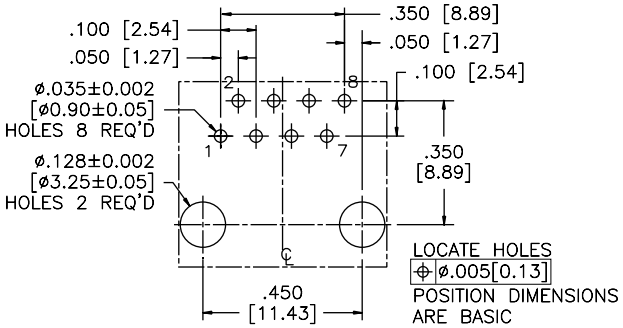


RECOMMENDED PCB LAYOUT

### Shielded

**RJE4A-188-XXX1**

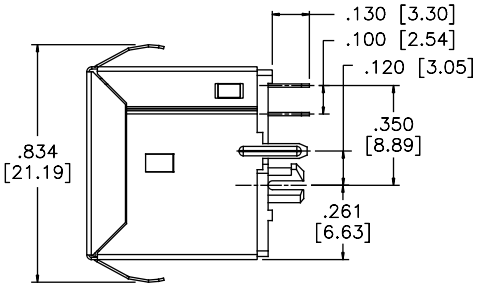


SIDE VIEW

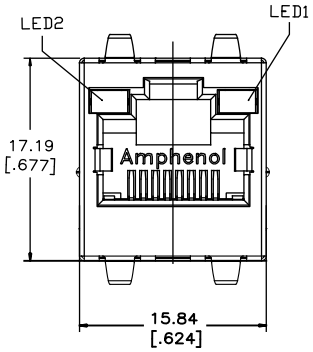


TOP VIEW

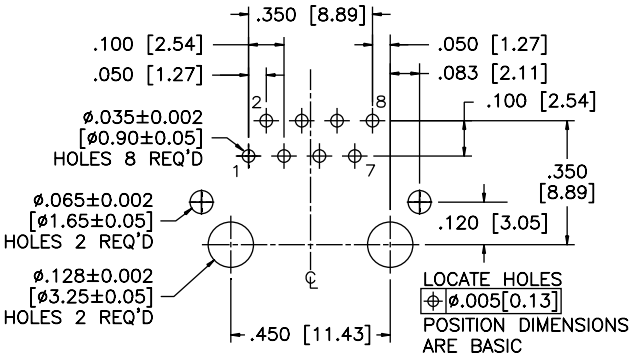


RECOMMENDED PCB LAYOUT

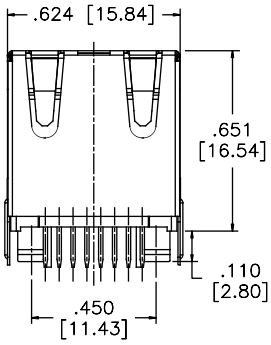


BACK VIEW


Amphenol Commercial Products - Amphenol Canada Corp. | Telephone: (416) 291-4401 | Fax: (416) 754-8668 | Email: sales@amphenolcanada.com
All specifications are subject to change without notice. Catalogue is updated regularly. Please refer to www.amphenolcanada.com for the most recent edition.

# RJE7B

CAT 6A, RIGHT ANGLE, STANDARD PROFILE, WITH LEDs

## RIGHT ANGLED, STANDARD PROFILE, WITH LEDs

The RJE7B series of modular jacks meet CAT 6A performance per EIA-568-C.2. It supports Gigabit Ethernet Protocols and 10G Ethernet over lengths of up to 100m. Shielding available for increased EMI performance and LEDs for link activity and network speed verification.

## SPECIFICATIONS

### Material

| | |
|---|---|
| **Insulator:** | High temp. thermoplastic;<br>Complies with UL 94V-0; Black colour |
| **Contacts:** | Phosphor bronze hard temper with gold thickness options (6µ", 15µ", 30µ", 50µ") over 50µ" min. nickel on contact mating area; 100µ" min. matte tin plating on solder tails |
| **Shield:** | Stainless steel with tin dipped tails |
| **LED:** | Tin plating on LED tails |

### Mechanical

| | |
|---|---|
| **Insertion Force:** | 5 lbs max. |
| **Pull Retention Force:** | 20 lbs min. |
| **Durability:** | 750 mating & unmating cycles |
| **Recommended Soldering Temperature:** | IR reflow peaked at 260°C for 5 to 8 secs. |
| **Operating Temperature:** | -55°C to + 85°C |
| **UL File Number:** | E135615 |

*Note: IR Reflow compatible version also available; Consult factory for details*

### Electrical

| | |
|---|---|
| **Contact Resistance:** | 20 mΩ max. |
| **Insulation resistance:** | 500 MΩ min. at 500V DC for 2 mins max. |
| **Current Rating:** | 1.25 Amps per contact |
| **Voltage Rating:** | 125 Volts AC |
| **DWV:** | 1000 VAC, 60 Hz. 1 min. |
| **LED Forward DC Current:** | 20mA typical |
| **LED Forward Voltage:** | 1.9 Volts max. at 2mA (for single colours)<br>2.6 Volts max. at 20mA (for bicolours) |
| **LED Reverse Voltage:** | 5 Volts min. |
| **LED Light Intensity:** | 0.4 to 1.5 mcd min. at 2mA (for single colours)<br>0.5 mcd min. at 2mA (for bicolours) |
| **LED Wave Length:** | Yellow: 587 ± 7 nm measured at 20mA<br>Green: 565 ± 6 nm measured at 20mA<br>Red: 625 ± 5 nm measured at 20mA |

## ORDERING INFORMATION

RJE7B - 1 8 8 - 1 X X X - X

**Number of Ports**
1 - 1 Port

**Number of Positions**
8 - 8 Positions

**Number of Contacts**
8 - 8 Contacts

**Shield Options**
1 - Full shield with top and bottom tabs

**Packaging**
Blank - Tray
T - Tape & Reel

**Modifier**
1 - 0.125" (3.18mm)
2 - 0.089" (2.27mm)
3 - 0.085" (2.16mm)

**LED Options**
Click to view page 3 for options

**Contact Plating**
1 - 6µ" gold plating
2 - 15µ" gold plating
3 - 30µ" gold plating
4 - 50µ" gold plating

**Didn't find what you were looking for?**
Please contact sales@amphenolcanada.com and let us know what you need.

# RJE7B

CAT 6A, RIGHT ANGLE, STANDARD PROFILE, WITH LEDs

## Single Port

**RJE7B-188-1XXX**

### Shielded

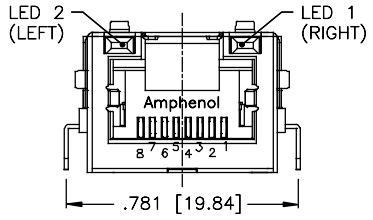


FRONT VIEW

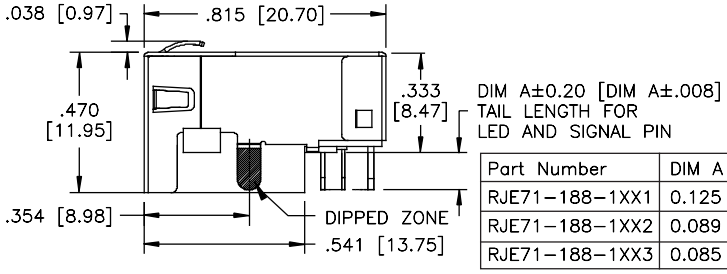


| Part Number | DIM A |
|---|---|
| RJE71–188–1XX1 | 0.125 [3.18] |
| RJE71–188–1XX2 | 0.089 [2.27] |
| RJE71–188–1XX3 | 0.085 [2.16] |

SIDE VIEW

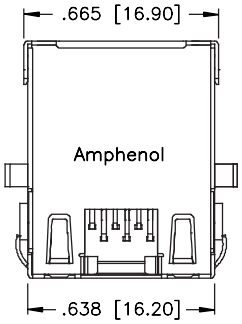


TOP VIEW

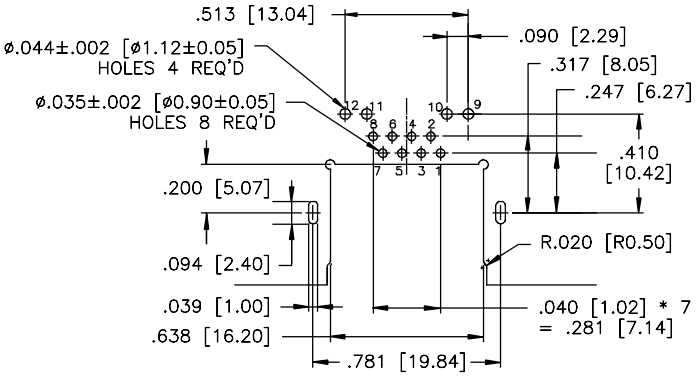


RECOMMENDED PCB LAYOUT

## *Notes*

Click to Return to Table of Contents


Amphenol Commercial Products - Amphenol Canada Corp. | Telephone: (416) 291-4401 | Fax: (416) 754-8668 | Email: sales@amphenolcanada.com
All specifications are subject to change without notice. Catalogue is updated regularly. Please refer to www.amphenolcanada.com for the most recent edition.

# RJE60

CAT 6A, RIGHT ANGLE, STANDARD PROFILE, WITH LEDs

## RIGHT ANGLED, STANDARD PROFILE, WITH LEDs

The RJE60 series of modular jacks meet CAT 6A performance per EIA-568-C.2. It supports Gigabit Ethernet Protocols. Shielding is available for increased EMI performance and LEDs for link activity and network speed verification.

## SPECIFICATIONS

### Material

| | |
|---|---|
| **Insulator:** | High temp. thermoplastic;<br>Complies with UL 94V-0; Black |
| **Contacts:** | Phosphor bronze hard temper with gold thickness options (6µ", 15µ", 30µ", 50µ") over 50µ" min. nickel on contact mating area; 100µ" min. matte tin plating on solder tails |
| **Shield:** | Stainless steel with tin dipped tails |
| **LED:** | Tin plating on LED tail |

### Mechanical

| | |
|---|---|
| **Insertion Force:** | 5 lbs max. |
| **Pull Retention Force:** | 20 lbs min. |
| **Durability:** | 750 mating & unmating cycles |
| **Recommended Soldering Temperature:** | Wave soldering peaked at 260°C for 10 secs max. for one cycle with an LED defect rate of no more than 100ppm |
| **Operating Temperature:** | -55°C to + 85°C |
| **UL File Number:** | E135615 |

*Note: Multiple exposure not recommended; IR Reflow compatible version also available; Consult factory for details*

### Electrical

| | |
|---|---|
| **Contact Resistance:** | 20 mΩ max. |
| **Insulation resistance:** | 500 MΩ min. at 500V DC for 2 mins max. |
| **Current Rating:** | 1.25 Amps per contact |
| **Voltage Rating:** | 125 Volts AC |
| **DWV:** | 1000 VAC, 60 Hz. 1 min. |
| **LED Forward DC Current:** | 20mA typical |
| **LED Forward Voltage:** | 1.9 Volts max. at 2mA (for single colours)<br>2.6 Volts max. at 20mA (for bicolours) |
| **LED Reverse Voltage:** | 5 Volts min. |
| **LED Light Intensity:** | 0.4 to 1.5 mcd min. at 2mA (for single colours)<br>0.5 mcd min. at 2mA (for bicolours) |
| **LED Wave Length:** | Yellow: 587 ± 7 nm measured at 20mA<br>Green: 565 ± 6 nm measured at 20mA<br>Red: 625 ± 5 nm measured at 20mA |

## ORDERING INFORMATION

**RJE60 - 1 8 8 - X X X X - X**

**Number of Ports**
1 - 1 Port

**Number of Positions**
8 - 8 Positions

**Number of Contacts**
8 - 8 Contacts

**Shield Options**
3 - Full shield with top tabs
5 - Full shield with top and side tabs
6 - Full shield without tabs

**Packaging**
Blank - Tray
T - Tape & Reel

**Modifier**
1 - Standard with boardlocks
2 - Without boardlocks

**LED Options**
Click to view page 3 for options

**Contact Plating**
1 - 6µ" gold plating
2 - 15µ" gold plating
3 - 30µ" gold plating
4 - 50µ" gold plating

**Didn't find what you were looking for?**
Please contact sales@amphenolcanada.com and let us know what you need.

# RJE60

CAT 6A, RIGHT ANGLE, STANDARD PROFILE, WITH LEDs

## Single Port

**RJE60-188-3XX1**

### Shielded - Option 3

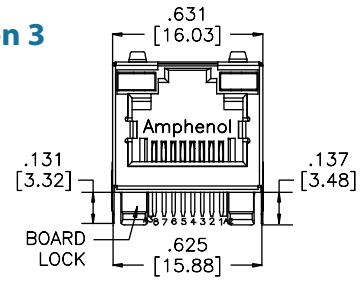


FRONT VIEW

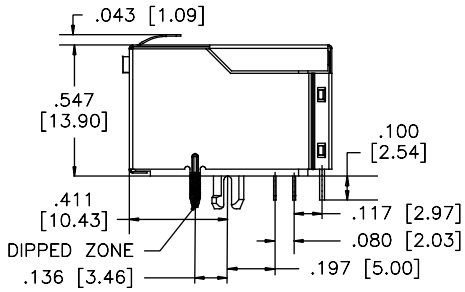


SIDE VIEW

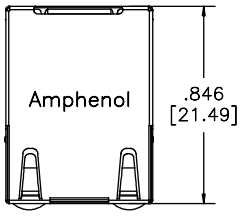


TOP VIEW

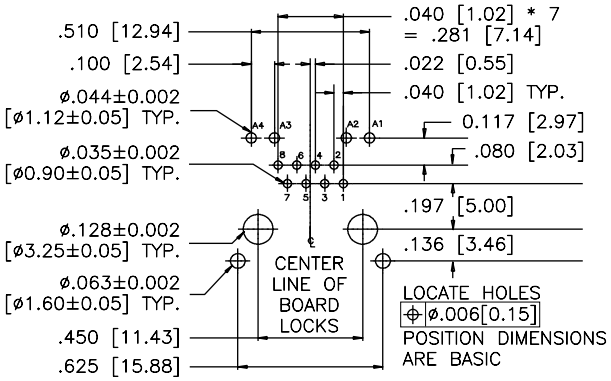


RECOMMENDED PCB LAYOUT

### Shielded - Option 5

**RJE60-188-5XX1**

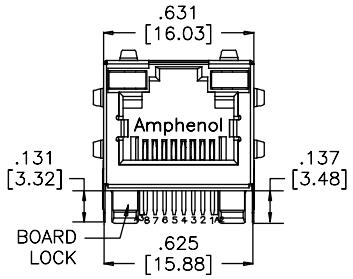


FRONT VIEW

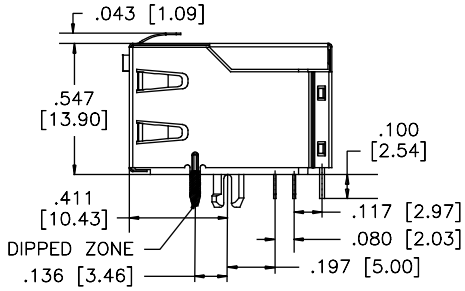


SIDE VIEW

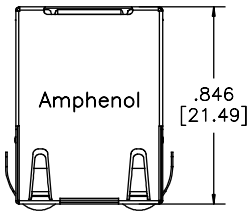


TOP VIEW

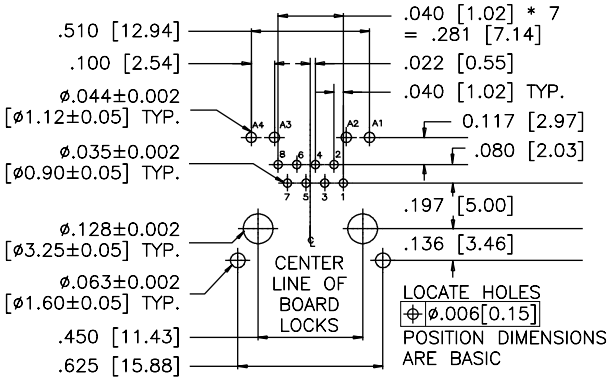


RECOMMENDED PCB LAYOUT


Amphenol Commercial Products - Amphenol Canada Corp. | Telephone: (416) 291-4401 | Fax: (416) 754-8668 | Email: sales@amphenolcanada.com
All specifications are subject to change without notice. Catalogue is updated regularly. Please refer to www.amphenolcanada.com for the most recent edition.

# RJE60

CAT 6A, RIGHT ANGLE, STANDARD PROFILE, WITH LEDs

## Single Port

**RJE60-188-6XX1**

### Shielded - Option 6

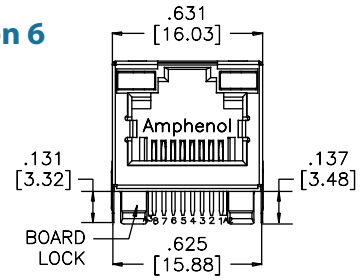


FRONT VIEW

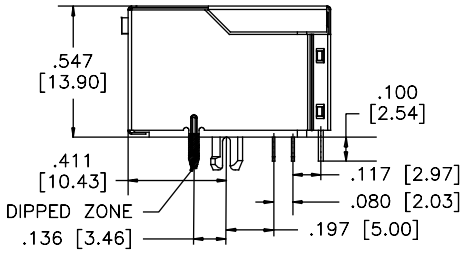


SIDE VIEW

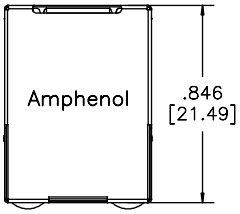


TOP VIEW

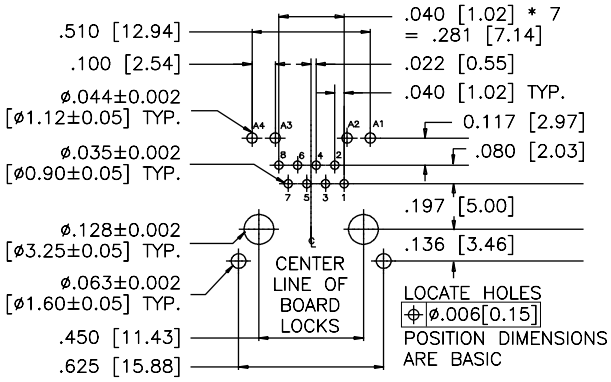


RECOMMENDED PCB LAYOUT

### *Notes*

# RJE17

RJ45 COUPLER

## RJ45 COUPLER

The RJE17 coupler provides connections through barriers such as equipment covers and panels. They are locked into place with a panel latch for secure mounting. Available in CAT 3 and CAT 5e performance. The added shielding provides optional EMI protection.

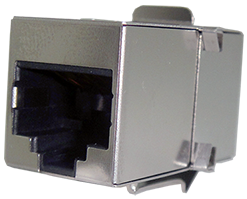

## SPECIFICATIONS

### Material

| | |
|---|---|
| **Insulator:** | Engineering thermoplastic; Complies with UL 94V-0; Black |
| **Contacts:** | Phosphor bronze hard temper with several gold thickness options over 50µ" min. nickel on contact mating area (refer to drawing below) |
| **Shield:** | Stainless steel with tin dipped tails |

### Electrical

| | |
|---|---|
| **Contact Resistance:** | 20 mΩ max. |
| **Insulation resistance:** | 500 MΩ min. at 500V DC for 2 mins max. |
| **Current Rating:** | 1.25 Amps per contact |
| **Voltage Rating:** | 125 Volts AC |
| **DWV:** | 1000 VAC, 60 Hz. 1 min. |

### Mechanical

| | |
|---|---|
| **Insertion Force:** | 5 lbs max. |
| **Pull Retention Force:** | 20 lbs min. |
| **Durability:** | 750 mating & unmating cycles |
| **Operating Temperature:** | -40°C to + 70°C |
| **Operating Temperature:** | -40°C to + 85°C |
| **UL File Number** | E136228 |

## ORDERING INFORMATION

RJE17 - 2 8 8 - X X X X

**Number of Ports**
2 - 2 Port

**Number of Positions**
8 - 8 Positions

**Number of Contacts**
8 - 8 Contacts

**Shield Options**
0 - No shield
1 - Full shield

**Modifier**
1 - CAT 3, matte tin plating on internal tail
3 - Cat 5e, matte tin plating on internal tail

**Port Options**
1 - Both ports are tab down
2 - One port is tab up, other is tab down

**Contact Plating**
2 - 15µ" gold plating
3 - 30µ" gold plating
4 - 50µ" gold plating

**Didn't find what you were looking for?**
Please contact sales@amphenolcanada.com and let us know what you need.

Click to Return to Table of Contents

# RJE17

RJ45 COUPLER

## Single Port

**RJE17-288-1X21**

### Shielded

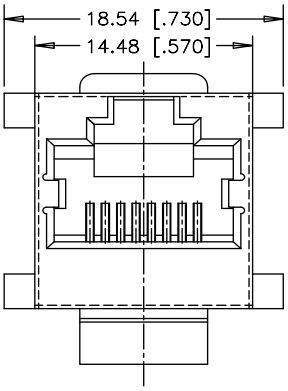


FRONT VIEW

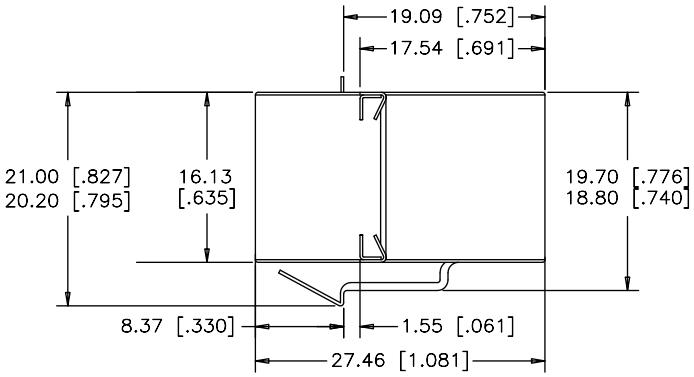


SIDE VIEW

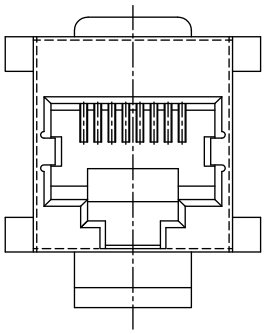

REAR VIEW

### *Notes*

# STACKED

## Right Angle

### RJSDE

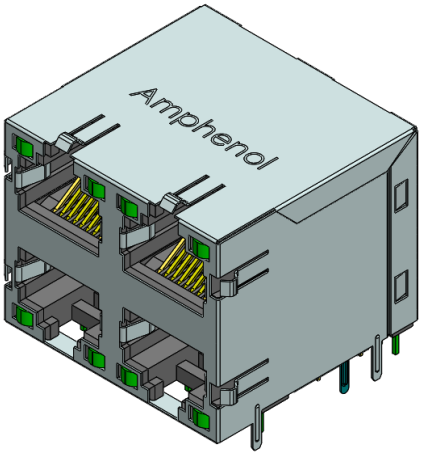


### RJSAR

### RJSFE

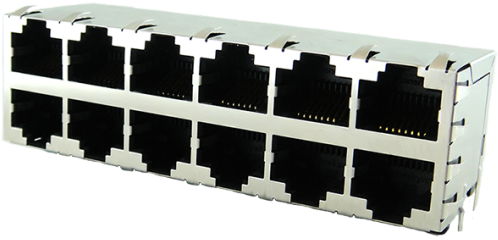

Click to Return to Table of Contents

# HIGH PERFORMANCE

## CAT 5e

### RJE1A

### RJE2A

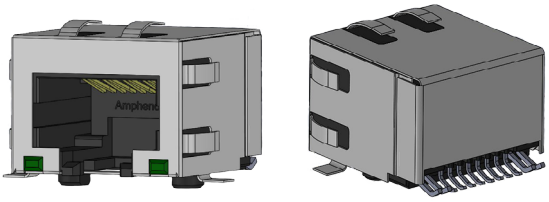

### RJE72

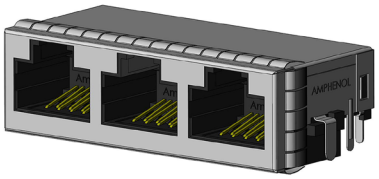

## CAT 6

### RJE1B

## CAT 6A

### RJE1C

### RJE50

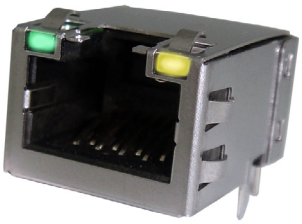

Click to Return to Table of Contents

# DUST COVERS & OTHERS

## Dust Covers

### FRJ-2611

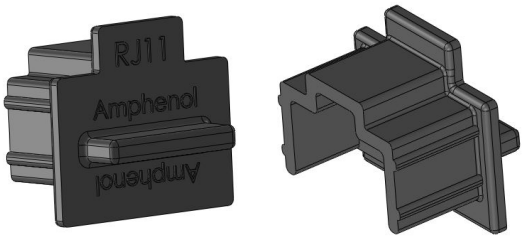


### FRJ-2411

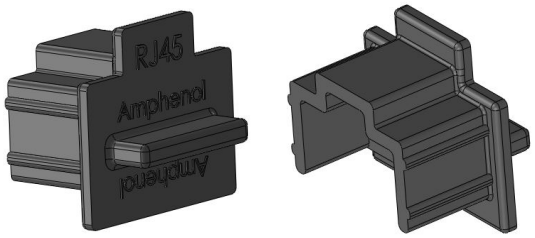


## Other

### RJE1L

Click to Return to Table of Contents

# NOTES

Amphenol ICC

605 Milner Avenue
Toronto, Ontario
Canada, M1B 5X6

www.amphenolcanada.com (www.amphenol-icc.com)
Telephone: (416) 291-4401
Fax: (416) 754-8668
E-mail: sales@amphenolcanada.com

All specifications are subject to change without notice.

*August 2018*

Общество с ограниченной ответственностью «МосЧип» ИНН 7719860671 / КПП 771901001
Адрес: 105318, г.Москва, ул.Щербаковская д.3, офис 1107

**Данный компонент на территории Российской Федерации**

**Вы можете приобрести в компании MosChip.**

Для оперативного оформления запроса Вам необходимо перейти по данной ссылке:

http://moschip.ru/get-element

Вы можете разместить у нас заказ для любого Вашего проекта, будь то серийное производство или разработка единичного прибора.

В нашем ассортименте представлены ведущие мировые производители активных и пассивных электронных компонентов.

Нашей специализацией является поставка электронной компонентной базы двойного назначения, продукции таких производителей как XILINX, Intel (ex.ALTERA), Vicor, Microchip, Texas Instruments, Analog Devices, Mini-Circuits, Amphenol, Glenair.

Сотрудничество с глобальными дистрибьюторами электронных компонентов, предоставляет возможность заказывать и получать с международных складов практически любой перечень компонентов в оптимальные для Вас сроки.

На всех этапах разработки и производства наши партнеры могут получить квалифицированную поддержку опытных инженеров.

Система менеджмента качества компании отвечает требованиям в соответствии с ГОСТ Р ИСО 9001, ГОСТ РВ 0015-002 и ЭС РД 009

**Офис по работе с юридическими лицами:**

105318, г.Москва, ул.Щербаковская д.3, офис 1107, 1118, ДЦ «Щербаковский»

Телефон: +7 495 668-12-70 (многоканальный)

Факс: +7 495 668-12-70 (доб.304)

E-mail: info@moschip.ru

Skype отдела продаж:
moschip.ru
moschip.ru_4
moschip.ru_6
moschip.ru_9