DATA SHEET

74ABT08
Quad 2-input AND gate

Product specification

IC23 Data Handbook

1995 Sep 18

Philips
Semiconductors

PHILIPS

Quad 2-input AND gate 74ABT08

QUICK REFERENCE DATA

SYMBOL	PARAMETER	CONDITIONS T_{amb} = 25°C; GND = 0V	TYPICAL	UNIT
t_{PLH} t_{PHL}	Propagation delay An or Bn to Yn	C_L = 50pF; V_{CC} = 5V	2.4 1.9	ns
t_{OSLH} t_{OSHL}	Output to Output skew		0.4	ns
C_{IN}	Input capacitance	V_I = 0V or V_{CC}	3	pF
I_{CC}	Total supply current	Outputs disabled; V_{CC} = 5.5V	50	µA

PIN CONFIGURATION

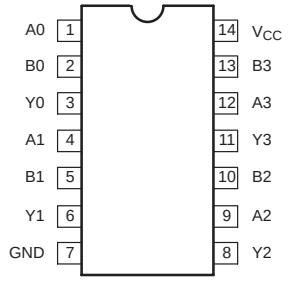

SA00342

LOGIC SYMBOL

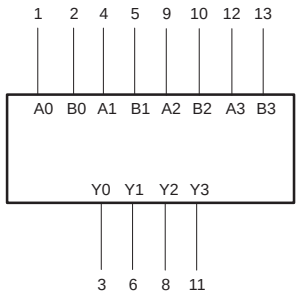

SA00343

LOGIC DIAGRAM

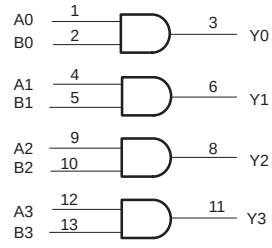

SA00344

PIN DESCRIPTION

PIN NUMBER	SYMBOL	NAME AND FUNCTION
1, 2, 4, 5, 9, 10, 12, 13	An-Bn	Data inputs
3, 6, 8, 11	Yn	Data outputs
7	GND	Ground (0V)
14	V_{CC}	Positive supply voltage

LOGIC SYMBOL (IEEE/IEC)

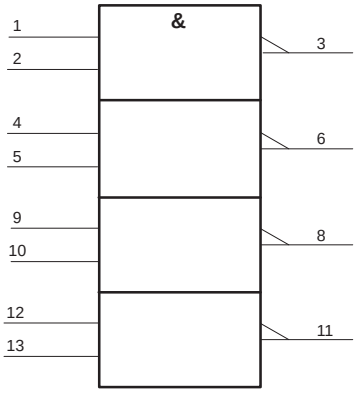

SA00363

FUNCTION TABLE

INPUTS		OUTPUT
An	Bn	Yn
L	L	L
L	H	L
H	L	L
H	H	H

NOTES:
H = High voltage level
L = Low voltage level

ORDERING INFORMATION

PACKAGES	TEMPERATURE RANGE	OUTSIDE NORTH AMERICA	NORTH AMERICA	DWG NUMBER
14-Pin Plastic DIP	–40°C to +85°C	74ABT08 N	74ABT08 N	SOT27-1
14-Pin plastic SO	–40°C to +85°C	74ABT08 D	74ABT08 D	SOT108-1
14-Pin Plastic SSOP Type II	–40°C to +85°C	74ABT08 DB	74ABT08 DB	SOT337-1
14-Pin Plastic TSSOP Type I	–40°C to +85°C	74ABT08 PW	74ABT08PW DH	SOT402-1

ABSOLUTE MAXIMUM RATINGS[1, 2]

SYMBOL	PARAMETER	CONDITIONS	RATING	UNIT
V_{CC}	DC supply voltage		–0.5 to +7.0	V
I_{IK}	DC input diode current	$V_I < 0$	–18	mA
V_I	DC input voltage[3]		–1.2 to +7.0	V
I_{OK}	DC output diode current	$V_O < 0$	–50	mA
V_{OUT}	DC output voltage[3]	output in Off or High state	–0.5 to +5.5	V
I_{OUT}	DC output current	output in Low state	40	mA
T_{stg}	Storage temperature range		–65 to 150	°C

NOTES:
1. Stresses beyond those listed may cause permanent damage to the device. These are stress ratings only and functional operation of the device at these or any other conditions beyond those indicated under “recommended operating conditions” is not implied. Exposure to absolute-maximum-rated conditions for extended periods may affect device reliability.
2. The performance capability of a high-performance integrated circuit in conjunction with its thermal environment can create junction temperatures which are detrimental to reliability. The maximum junction temperature of this integrated circuit should not exceed 150°C.
3. The input and output voltage ratings may be exceeded if the input and output current ratings are observed.

RECOMMENDED OPERATING CONDITIONS

SYMBOL	PARAMETER	LIMITS		UNIT
		MIN	MAX	
V_{CC}	DC supply voltage	4.5	5.5	V
V_I	Input voltage	0	V_{CC}	V
V_{IH}	High-level input voltage	2.0		V
V_{IL}	Low-level input voltage		0.8	V
I_{OH}	High-level output current		–15	mA
I_{OL}	Low-level output current		20	mA
$\Delta t/\Delta v$	Input transition rise or fall rate	0	5	ns/V
T_{amb}	Operating free-air temperature range	–40	+85	°C

DC ELECTRICAL CHARACTERISTICS

SYMBOL	PARAMETER	TEST CONDITIONS	LIMITS					UNIT
			T_{amb} = +25°C			T_{amb} = –40°C to +85°C		
			MIN	TYP	MAX	MIN	MAX	
V_{IK}	Input clamp voltage	V_{CC} = 4.5V; I_{IK} = –18mA		–0.9	–1.2		–1.2	V
V_{OH}	High-level output voltage	V_{CC} = 4.5V; I_{OH} = –15mA; $V_I = V_{IL}$ or V_{IH}	2.5	2.9		2.5		V
V_{OL}	Low-level output voltage	V_{CC} = 4.5V; I_{OL} = 20mA; $V_I = V_{IL}$ or V_{IH}		0.35	0.5		0.5	V
I_I	Input leakage current	V_{CC} = 5.5V; V_I = GND or 5.5V		±0.01	±1.0		±1.0	µA
I_{OFF}	Power-off leakage current	V_{CC} = 0.0V; V_O or $V_I \leq 4.5V$		±5.0	±100		±100	µA
I_{CEX}	Output High leakage current	V_{CC} = 5.5V; V_O = 5.5V; V_I = GND or V_{CC}		5.0	50		50	µA
I_O	Output current[1]	V_{CC} = 5.5V; V_O = 2.5V	–50	–75	–180	–50	–180	mA
I_{CC}	Quiescent supply current	V_{CC} = 5.5V; V_I = GND or V_{CC}		2	50		50	µA
ΔI_{CC}	Additional supply current per input pin[2]	V_{CC} = 5.5V; One data input at 3.4V, other inputs at V_{CC} or GND		0.25	500		500	µA

NOTES:
1. Not more than one output should be tested at a time, and the duration of the test should not exceed one second.
2. This is the increase in supply current for each input at 3.4V.

AC CHARACTERISTICS

GND = 0V; $t_R = t_F = 2.5ns$; $C_L = 50pF$, $R_L = 500\Omega$

SYMBOL	PARAMETER	WAVEFORM	LIMITS					UNIT
			T_{amb} = +25°C V_{CC} = +5.0V			T_{amb} = –40°C to +85°C V_{CC} = +5.0V ±0.5V		
			MIN	TYP	MAX	MIN	MAX	
t_{PLH} t_{PHL}	Propagation delay An or Bn to Yn	1	1.0 1.0	2.4 1.9	3.4 2.8	1.0 1.0	4.0 3.0	ns
t_{OSHL} t_{OSLH}[1]	Output to Output skew An or Bn to $\overline{Y}$n	2		0.4 0.4	0.5 0.5		0.5 0.5	ns

NOTE:

1. Skew is defined as the absolute value of the difference between the actual propagation delay for any two separate outputs of the same device. The specification applies to any outputs switching in the the same direction, either HIGH-to-LOW (t_{OSHL}) or LOW-to-HIGH (t_{OSLH}); parameter guaranteed by design.

AC WAVEFORMS

$V_M = 1.5V$, V_{IN} = GND to 3.0V

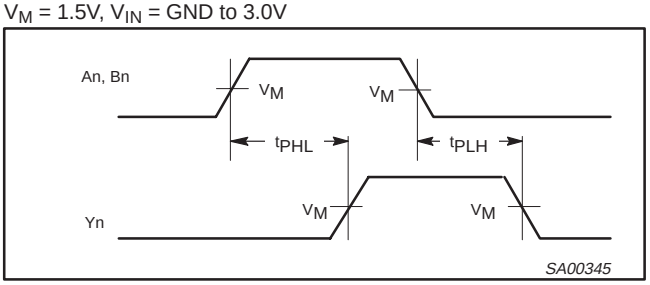

Waveform 1. Propagation Delay for Non-Inverting Outputs

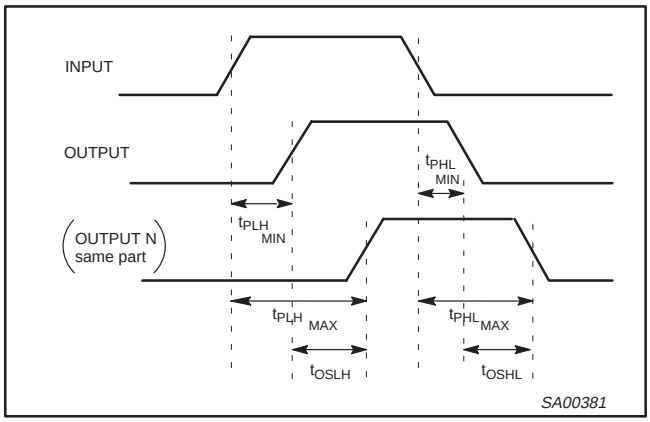

Waveform 2. Common edge skew

TEST CIRCUIT AND WAVEFORMS

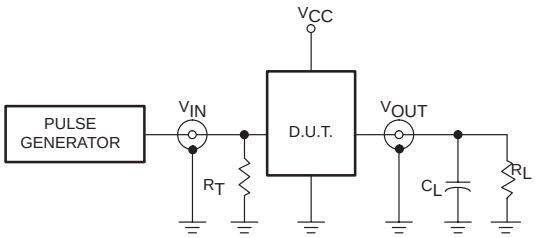

Test Circuit for Outputs

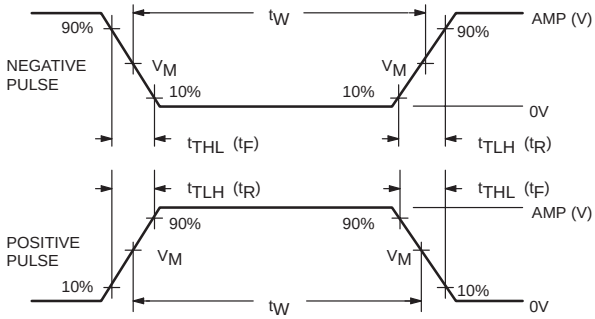

$V_M = 1.5V$

Input Pulse Definition

DEFINITIONS

R_L = Load resistor; see AC CHARACTERISTICS for value.

C_L = Load capacitance includes jig and probe capacitance; see AC CHARACTERISTICS for value.

R_T = Termination resistance should be equal to Z_{OUT} of pulse generators.

FAMILY	INPUT PULSE REQUIREMENTS				
	Amplitude	Rep. Rate	t_W	t_R	t_F
74ABT	3.0V	1MHz	500ns	2.5ns	2.5ns

SH00067

DIP14: plastic dual in-line package; 14 leads (300 mil) **SOT27-1**

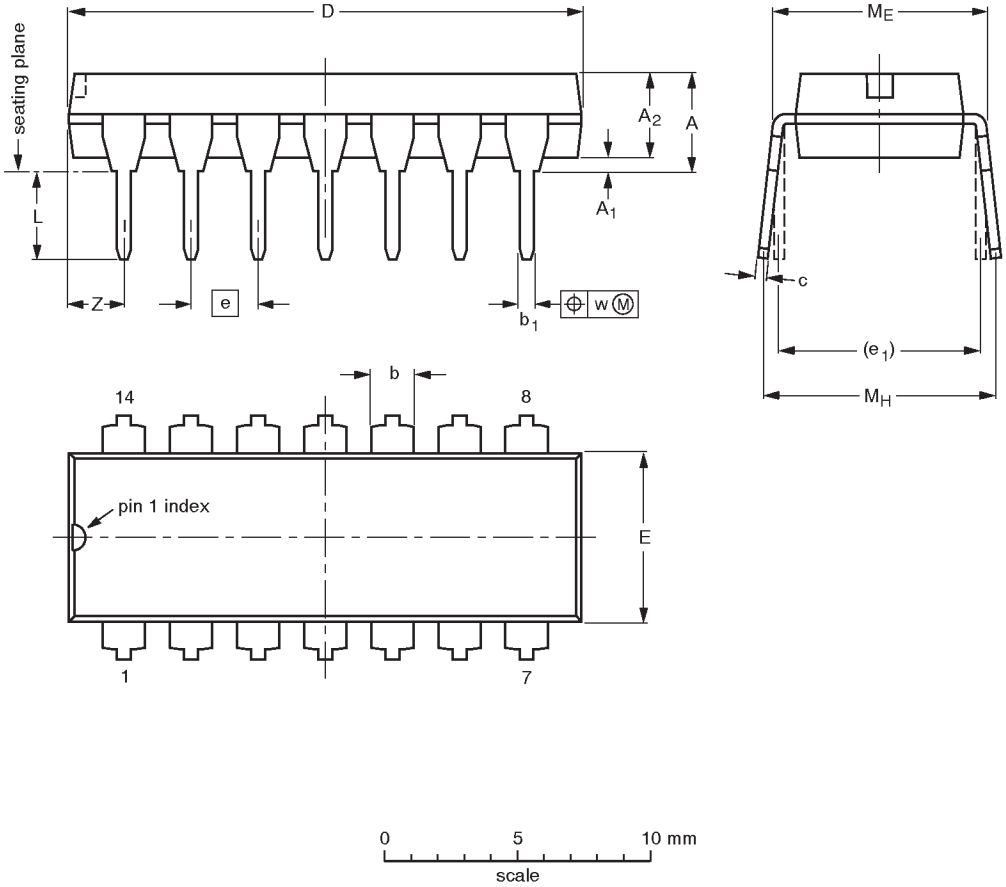

DIMENSIONS (inch dimensions are derived from the original mm dimensions)

UNIT	A max.	A_1 min.	A_2 max.	b	b_1	c	D (1)	E (1)	e	e_1	L	M_E	M_H	w	Z (1) max.
mm	4.2	0.51	3.2	1.73 1.13	0.53 0.38	0.36 0.23	19.50 18.55	6.48 6.20	2.54	7.62	3.60 3.05	8.25 7.80	10.0 8.3	0.254	2.2
inches	0.17	0.020	0.13	0.068 0.044	0.021 0.015	0.014 0.009	0.77 0.73	0.26 0.24	0.10	0.30	0.14 0.12	0.32 0.31	0.39 0.33	0.01	0.087

Note

1. Plastic or metal protrusions of 0.25 mm maximum per side are not included.

OUTLINE VERSION	REFERENCES				EUROPEAN PROJECTION	ISSUE DATE
	IEC	JEDEC	EIAJ			
SOT27-1	050G04	MO-001AA				~~92-11-17~~ 95-03-11

SO14: plastic small outline package; 14 leads; body width 3.9 mm SOT108-1

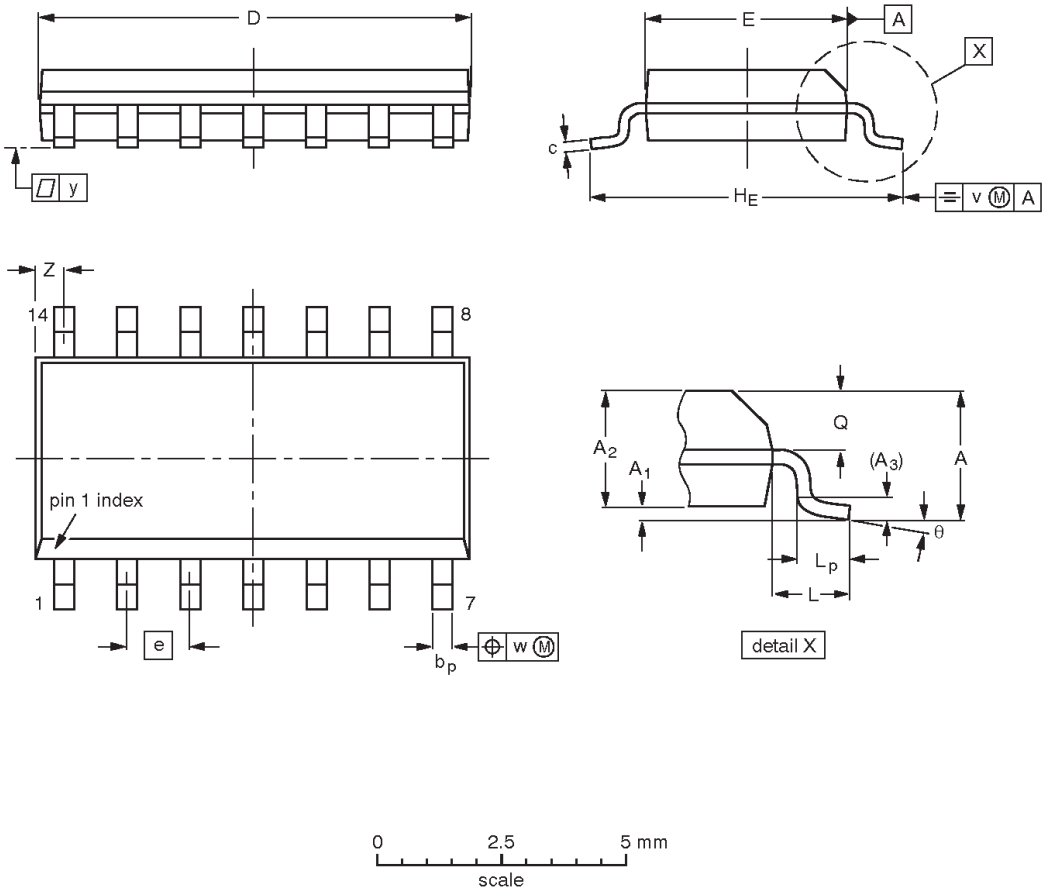

DIMENSIONS (inch dimensions are derived from the original mm dimensions)

UNIT	A max.	A_1	A_2	A_3	b_p	c	D(1)	E(1)	e	H_E	L	L_p	Q	v	w	y	Z(1)	θ
mm	1.75	0.25 0.10	1.45 1.25	0.25	0.49 0.36	0.25 0.19	8.75 8.55	4.0 3.8	1.27	6.2 5.8	1.05	1.0 0.4	0.7 0.6	0.25	0.25	0.1	0.7 0.3	8° 0°
inches	0.069	0.010 0.004	0.057 0.049	0.01	0.019 0.014	0.0100 0.0075	0.35 0.34	0.16 0.15	0.050	0.244 0.228	0.041	0.039 0.016	0.028 0.024	0.01	0.01	0.004	0.028 0.012	

Note

1. Plastic or metal protrusions of 0.15 mm maximum per side are not included.

OUTLINE VERSION	REFERENCES				EUROPEAN PROJECTION	ISSUE DATE
	IEC	JEDEC	EIAJ			
SOT108-1	076E06S	MS-012AB				~~95-01-23~~ 97-05-22

SSOP14: plastic shrink small outline package; 14 leads; body width 5.3 mm **SOT337-1**

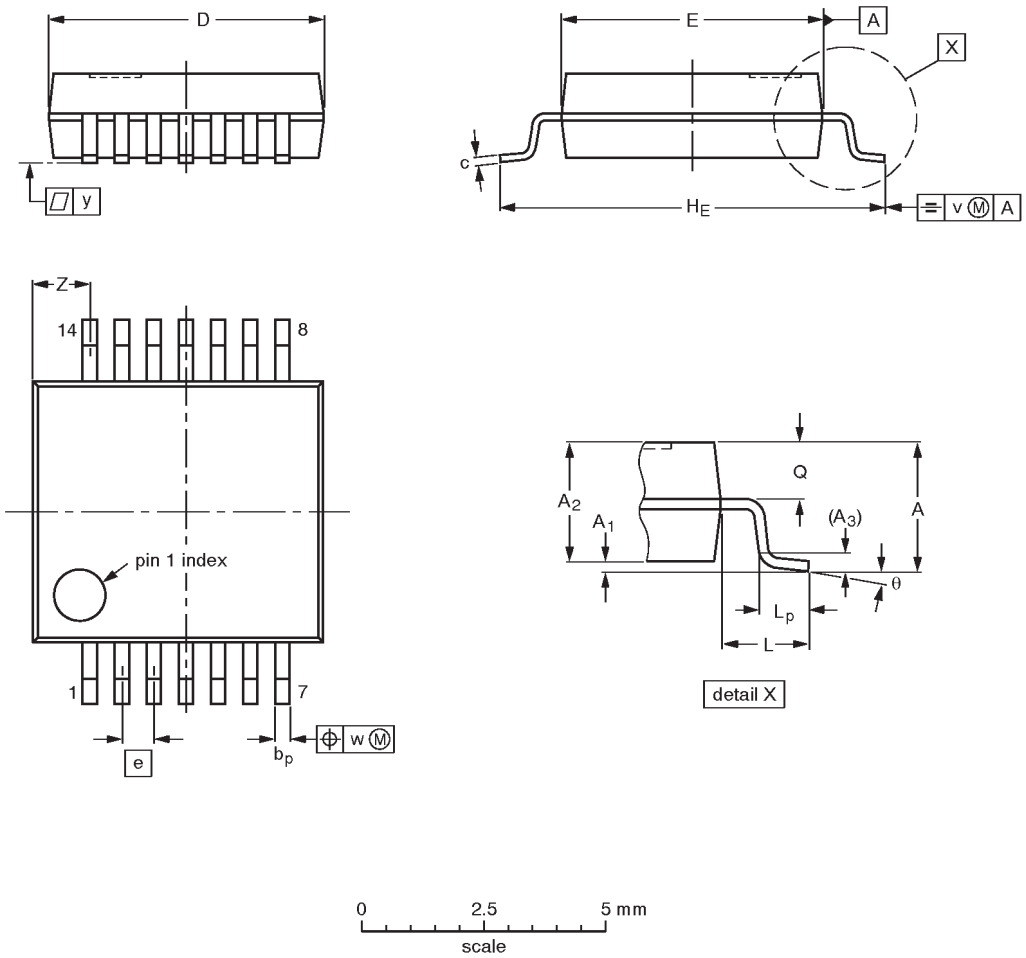

DIMENSIONS (mm are the original dimensions)

UNIT	A max.	A_1	A_2	A_3	b_p	c	D (1)	E (1)	e	H_E	L	L_p	Q	v	w	y	Z (1)	θ
mm	2.0	0.21 0.05	1.80 1.65	0.25	0.38 0.25	0.20 0.09	6.4 6.0	5.4 5.2	0.65	7.9 7.6	1.25	1.03 0.63	0.9 0.7	0.2	0.13	0.1	1.4 0.9	8° 0°

Note

1. Plastic or metal protrusions of 0.25 mm maximum per side are not included.

OUTLINE VERSION	REFERENCES				EUROPEAN PROJECTION	ISSUE DATE
	IEC	JEDEC	EIAJ			
SOT337-1		MO-150AB				~~95-02-04~~ 96-01-18

TSSOP14: plastic thin shrink small outline package; 14 leads; body width 4.4 mm **SOT402-1**

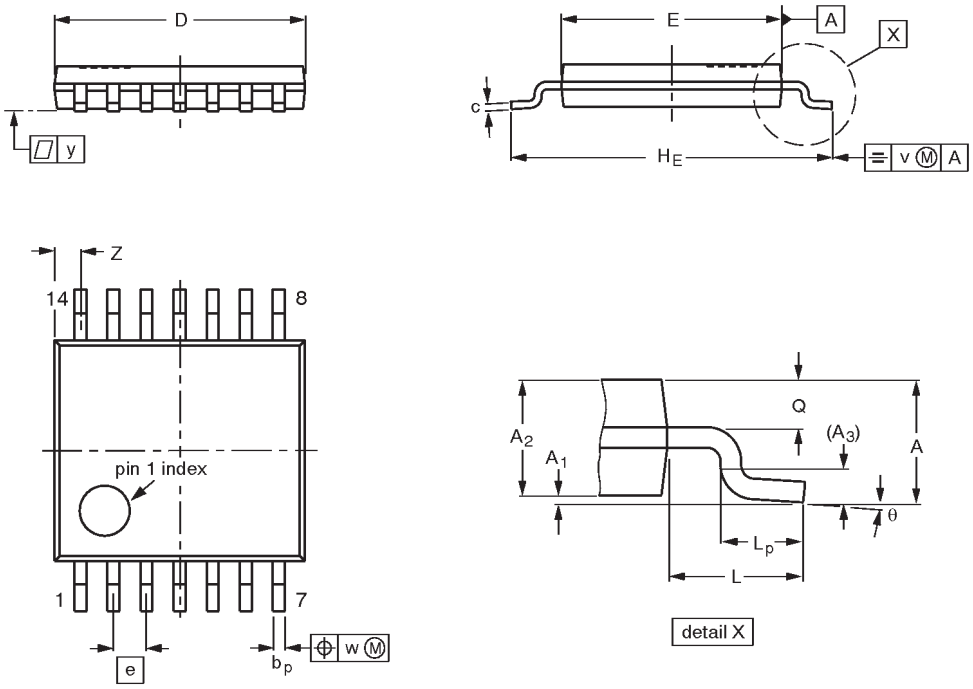

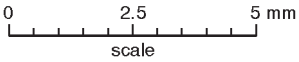

DIMENSIONS (mm are the original dimensions)

UNIT	A max.	A_1	A_2	A_3	b_p	c	D (1)	E (2)	e	H_E	L	L_p	Q	v	w	y	Z (1)	θ
mm	1.10	0.15 0.05	0.95 0.80	0.25	0.30 0.19	0.2 0.1	5.1 4.9	4.5 4.3	0.65	6.6 6.2	1.0	0.75 0.50	0.4 0.3	0.2	0.13	0.1	0.72 0.38	8° 0°

Notes

1. Plastic or metal protrusions of 0.15 mm maximum per side are not included.
2. Plastic interlead protrusions of 0.25 mm maximum per side are not included.

OUTLINE VERSION	REFERENCES				EUROPEAN PROJECTION	ISSUE DATE
	IEC	JEDEC	EIAJ			
SOT402-1		MO-153				~~94-07-12~~ 95-04-04

NOTES

DEFINITIONS

Data Sheet Identification	Product Status	Definition
Objective Specification	**Formative or in Design**	This data sheet contains the design target or goal specifications for product development. Specifications may change in any manner without notice.
Preliminary Specification	**Preproduction Product**	This data sheet contains preliminary data, and supplementary data will be published at a later date. Philips Semiconductors reserves the right to make changes at any time without notice in order to improve design and supply the best possible product.
Product Specification	**Full Production**	This data sheet contains Final Specifications. Philips Semiconductors reserves the right to make changes at any time without notice, in order to improve design and supply the best possible product.

Philips Semiconductors and Philips Electronics North America Corporation reserve the right to make changes, without notice, in the products, including circuits, standard cells, and/or software, described or contained herein in order to improve design and/or performance. Philips Semiconductors assumes no responsibility or liability for the use of any of these products, conveys no license or title under any patent, copyright, or mask work right to these products, and makes no representations or warranties that these products are free from patent, copyright, or mask work right infringement, unless otherwise specified. Applications that are described herein for any of these products are for illustrative purposes only. Philips Semiconductors makes no representation or warranty that such applications will be suitable for the specified use without further testing or modification.

LIFE SUPPORT APPLICATIONS
Philips Semiconductors and Philips Electronics North America Corporation Products are not designed for use in life support appliances, devices, or systems where malfunction of a Philips Semiconductors and Philips Electronics North America Corporation Product can reasonably be expected to result in a personal injury. Philips Semiconductors and Philips Electronics North America Corporation customers using or selling Philips Semiconductors and Philips Electronics North America Corporation Products for use in such applications do so at their own risk and agree to fully indemnify Philips Semiconductors and Philips Electronics North America Corporation for any damages resulting from such improper use or sale.

Philips Semiconductors
811 East Arques Avenue
P.O. Box 3409
Sunnyvale, California 94088–3409
Telephone 800-234-7381

Philips Semiconductors and Philips Electronics North America Corporation register eligible circuits under the Semiconductor Chip Protection Act.
© Copyright Philips Electronics North America Corporation 1995
All rights reserved. Printed in U.S.A.

Общество с ограниченной ответственностью «МосЧип» ИНН 7719860671 / КПП 771901001
Адрес: 105318, г.Москва, ул.Щербаковская д.3, офис 1107

Данный компонент на территории Российской Федерации

Вы можете приобрести в компании MosChip.

Для оперативного оформления запроса Вам необходимо перейти по данной ссылке:

http://moschip.ru/get-element

Вы можете разместить у нас заказ для любого Вашего проекта, будь то серийное производство или разработка единичного прибора.

В нашем ассортименте представлены ведущие мировые производители активных и пассивных электронных компонентов.

Нашей специализацией является поставка электронной компонентной базы двойного назначения, продукции таких производителей как XILINX, Intel (ex.ALTERA), Vicor, Microchip, Texas Instruments, Analog Devices, Mini-Circuits, Amphenol, Glenair.

Сотрудничество с глобальными дистрибьюторами электронных компонентов, предоставляет возможность заказывать и получать с международных складов практически любой перечень компонентов в оптимальные для Вас сроки.

На всех этапах разработки и производства наши партнеры могут получить квалифицированную поддержку опытных инженеров.

Система менеджмента качества компании отвечает требованиям в соответствии с ГОСТ Р ИСО 9001, ГОСТ РВ 0015-002 и ЭС РД 009

Офис по работе с юридическими лицами:

105318, г.Москва, ул.Щербаковская д.3, офис 1107, 1118, ДЦ «Щербаковский»

Телефон: +7 495 668-12-70 (многоканальный)

Факс: +7 495 668-12-70 (доб.304)

E-mail: info@moschip.ru

Skype отдела продаж:
moschip.ru
moschip.ru_4
moschip.ru_6
moschip.ru_9