

CONNECTORS

Switchcraft®

ENGINEERING DESIGN GUIDE

4th Edition



JACKS & PLUGS



JACK PANELS



PATCH CORDS & MOLDED CABLE ASSEMBLIES



SWITCHES

* Please visit the product pages on our website for the most up-to-date product information

Switchcraft

ABOUT SWITCHCRAFT, INC.

Switchcraft, Inc. was established in 1946 to manufacture jacks, plugs and switches, from its original plant located on West Diversey Street in Chicago. The company moved to a larger facility at 1328 North Halsted Street in 1948, and in 1958, the operation moved to 5555 North Elston Avenue, which is still the headquarters of the corporation.

Switchcraft is a leading supplier of a broad line of components for the audio/video, broadcast, telecommunication, computer, medical, military, appliance, transportation and instrumentation industries.

In the 185,000-square-foot Chicago facility, Switchcraft manufactures electronic and elecromechanical components, including:

- Jacks
- Connectors
- Patch Panels
- Switches
- Molded Cable Assemblies
- Plugs
- Jackfields
- Patch Cords
- EAC Power Receptacles

With a basic line of over 5,000 standard products and thousands of variations, Switchcraft is proud to offer a limited lifetime warranty on all products.

Switchcraft markets products both domestically and internationally through a network of manufacturers' representatives and independent distributors.

In 1999, Switchcraft acquired the Conxall Corporation located in Villa Park, Illinois. Conxall was founded in 1971 as a manufacturer of sealed connectors for the marine industry. Today, the company offers a broad line of custom cable assemblies and connectors used in marine, industrial, sensor, communications and transportation applications. For more information contact Conxall at (630) 834-7504, or visit their website at www.conxall.com.

LIMITED LIFETIME WARRANTY

Switchcraft warrants all of its products to be of sound design, good materials and workmanship at the time of manufacture.

Switchcraft will repair or replace at its discretion any product proven to be defective under normal use.

Switchcraft's liabilty under the terms of this warranty is limited to the repair or replacement of defective products which have not been damaged through accident, abuse, misuse or unauthorized repair. Switchcraft shall in no case be liable for special or consequential damages of any nature.

CATALOG SECTIONS

Connectors 1-78

Jacks & Plugs 79-162

Jack Panels 163-238

Patch Cords and Molded Cable Assemblies 239-268

Switches 269-318

Index by Part Number . . . 319-328

Visit us on the net:

www.switchcraft.com

ABOUT Switchcraft

* Please visit the product pages on our website for the most up-to-date product information

Switchcraft® TABLE OF CONTENTS

CONNECTORS AND RECEPTACLES

Q-G® XLR CONNECTORS....1-30
Q-G® Connector Part Numbering System....2
Professional Series Q-G® Connector Part Numbering System....2
Q-G® Audio Connectors A, AA, AND QGP Series....3-4
Part Numbers - Male Cord Plugs/Female Cord Plugs....4
Q-G® Color Flex Reliefs/Flex Relief....5
AAA XLR Connectors....6-7
P(*)M Gooseneck Plug, P(*)F Microphone Plug, R(*)MZ Cord Plug, R(*)FZ Cord Plug....8
D(*)M, D(*)F and D(*)FD Receptacles....9
T(*)F and T(*)FM Cord Plug With On-Off Switch....9
B(*)F Receptacle, C(*)F Receptacle, B(*)M Receptacle, C(*)M Receptacle....10
E Series Receptacles....11-15
EH Series Receptacles....16
PQG® Receptacles....17-18
PD Series - Plastic Panel Mount....19-21
Y3F, Y3FPC, Y3FDPC and Y3MPC Receptacles....22
F Series Receptacles....23-24
Q-G® Adapters, Accessories....25
Q-G® Wall Plate Receptacles....26
Q-G® Connector-Adapters....27-28
S*FM Audio Connector-Adapter....28
Audio "Y" Adapters....28
DMX Adapter....29
Q-G® Connector-Adapter Receptacles....30
Z Matching Transformers, Series M(*)M, Series L(*)MN....30

TINI Q-G® MINIATURE CONNECTORS....31-37
Tini Q-G® Audio Adapters....31
TB(*)M AND TB(*)MB Receptacle,TLP(*) Looping Plug, Straight Female Looping Plug, Reverse Gender TQG Series....33
TRA(*)M PC Mount Male Receptacle....34
TRASM*M, TRAPC*M Series....34-36
TY(*)F and TY(*)FPC Receptacles,TYEF Escutcheons, TQG(*)F and TQG(*)M Connector Inserts, TBA(**) Audio Adapter....37

HPC HIGH POWER AUDIO CONNECTORS....38-40

EN3TMini WEATHERTIGHT CONNECTOR SERIES....41-45
2 - 8 pin Cord Connector, 9 - 18 pin Cord Connector....43
2 - 8 pin Panel Connector, 9 - 18 pin Panel Connector....44
2 - 8 pin Inline Connector, 2 - 8 pin Overmolded Cord and Inline Connector....45

DIN CONNECTORS....46-55
Plugs....46-48
Panel Mount Receptacles....48-50
Right Angle PC Mount Receptacles....51-52
Mini-DIN Right-Angle Receptacles, Right-Angle, PC Mount Receptacles....47-53
SMD Series....54
DMD Series....55

USB CONNECTORS....56-57

IEEE 1394 FIREWIRE CONNECTORS....58-59

SLIM-LINE CONNECTORS....60-64
Cord Plugs....60
Slim-Line Connector Part Numbering System, Cable Clamp and Strain Relief....61
SL40-SL41 Male/Female Cord Plugs....62
SL10-SL17 Male/Female Receptacles....63
SL18 Male/Female Receptacles....64

CB CONNECTORS MICROPHONE CONNECTORS, MINI-CON MINIATURE CONNECTORS....65

HP75BNC SERIES BNC CONNECTORS....66-67

EAC RECEPTACLES....68-77

RAPC322 POWER INLET SOCKET....78

JACKS AND PLUGS

JACK SCHEMATICS....79-80

1/4" LONG FRAME TELEPHONE JACKS....81-85
1/4" Jack Blocks....86

BANTAM TYPE® JACKS....87-90
TT-JAX® (.173") Telephone Jacks Bantam Type®....87-88
TT-JAX® (.173") Telephone Twin Jacks Bantam Type®....89
TT-JAX® (.173") Telephone Triple Jacks Bantam Type®....90
RTT Series Miniature Telephone Jacks, Right Angle, PC Mount....91-92
.177" Enclosed Jacks....93

LITTEL JAX® 2- AND 3-CONDUCTOR, 1/4" PHONE JACKS....94-109
Hi-D Jax® 2- and 3-Conductor....96-99
Spring Lock PC Terminals for Hi-D Jax®....100
SN Series, RA Series Right-Angle Phone Jacks....101-105
500 Series Jack Covers....106
Series E (Locking) and Thick Panel Phone Jacks....107
1/4" Extension Jacks and 1/4" Speaker Jacks....108
1/4" Shielded Phone Jacks, SF-Jax® Short Frame Jacks....109

.141" MINIATURE PHONO JACKS....109-111

3.5MM DUAL STEREO JACK....112-113

3.5MM SINGLE MONO AND STEREO JACKS....114-118

3.5MM SINGLE MONO JACKS....119

2.5MM SINGLE MONO AND STEREO JACKS....120

.101" SUBMINIATURE PHONE JACKS....121-122

RCA PHONO JACKS AND PHONO JACK SETS....123-129

RIGHT ANGLE MINIATURE POWER JACKS....130-133

STRAIGHT MINIATURE POWER JACKS....134-135

VJ SERIES VIDEO JACKS....136

MVJ SERIES VIDEO JACKS....137

MIL-TYPE 1/4" PHONE PLUGS....138-141
Littel Plug® Phone Plugs....139

MIL-TYPE 1/4" EXTENSION JACKS....142

® Registered trademark of Switchcraft, Inc.

Note: Contact your Switchcraft Representative for price and delivery

TELEPHONE PATCH ADAPTERS 142

BANTAM TYPE MINIATURE TELEPHONE PLUGS 143-144

1/4" COMMERCIAL PHONE PLUGS - LITTEL-PLUG® PLUGS 145-147
- Silent-Plug And Lug® Phone Plugs 148
- Audio Loudspeaker and Heavy Duty 1/4" Commercial Phone Plugs 149-150
- .206" Commercial Phone Plugs 151
- 1/4" Miti-Plug® Audio Plugs 152
- 1/4" Flat Plug Phone Plugs 153
- Right-Angle Phone Plugs 154
- 1/4" Lock-Extension Jacks And Plugs 155

3.5MM HEAVY DUTY STEREO PLUGS 156

.141" MINIATURE PHONE PLUGS 157

.097" SUBMINIATURE PHONE PLUGS 158

AUDIO ADAPTERS 159

RCA PHONO PLUGS 160-161

MINIATURE POWER PLUGS 162

JACK PANELS, PATCH PANELS, PATCH KITS AND JACKFIELDS

AUDIO PATCHBAYS 163-190
- Professional Punchdown Terminal (PPT) 163
- Front Access MTPFA/TTPFA Series 164-165
- MTP48K Wired Audio Series 166-167
- TTP96K Wired Audio Series 168-169
- MTPH/TTPH Harness Audio Series 170-173
- MTPBP/TTPBP Backpanel Series 174-175
- EZ NORM Patchbay Series 176-177
- TT96 EDAC Series 178-179
- TTP96K Patchkit Series 180-181
- MT48K/MT52K Patchkit Series 182-183
- MT48/MT52 Patchbay Series 184-185
- TTP96AS Patchbay Series 186-187
- Q-G®XLR Patchbay Series 188-189
- HPC Patchbay Series 190

RS 422 DATA PATCHBAY SERIES 191-192

VIDEO PATCHBAYS 193-201
- VPP Video Patchbay Series 193-195
- MVP Midsize Video Patchbay Series 196-198
- VAP Video/Audio Patchbay Series 199-200
- MBPK Video/Audio Patchbay Series 201

TELECOM TYPE JACK PANELS 202-238
- Long Frame (1/4")Single Row Telephone Jack Panels 202- 203
- Long Frame (1/4") Twin Row Jack Panels 204-205
- Long Frame (1/4") Modular Twin Row Jack Panels 206-209
- Long Frame (1/4") Modular 3 Row Jack Panels 210
- TT-Jax® (.173") Jack Panel Series 1600, A1600, B1600, C1600 211-214
- Modular TT-JAX® (.173") Panels - Blank Series TT51, TT53, TT56, TT59 215
- TT Module Inserts - Series TT91, TT92 And TT93 216
- Modular TT-Jax® (.173") Jack Panels -Series TT5102000, TT5202000, TT5502000, TT5602000 217-218
- TT-Jax® (.173") Twin Row and Three Row Jack Panels 219-220
- TT-Jax® (.173") Connectorized Jackfields - Series TT, 2-wire, 4-wire, 6-wire 221-229
- TT® Lamps and Jewel Assemblies 230
- Longframe Switchboard Switches 231
- Dummy Plugs and Hole Plugs 232
- TT® (Bantam) Circuit Guard Plugs 233
- Miniature, Dummy Plugs, Hole Plugs 234
- Designation Strips 235-236
- Kwik-Change® Designation Strips (Double Height) 237
- X-Wide® Vertical Designation Strips 238

PATCH CORDS AND MOLDED CABLE ASSEMBLIES

MOLDED CABLE ASSEMBLIES 239-261
- Design Materials and Features 239
- 3.5MM Molded Cables 240
- Power-Plug Battery Charger Plugs and Jacks 241
- Power Plugs and Jacks Part Numbering System 242
- EN3T MINI Weathertight Overmolded Cable Assemblies 243
- Cordette® and Cord Switch Assemblies 44
- Cordette® Switches 245
- DIN Plugs 246-248
- MIDI Cables 249
- Miniature, Shielded, Molded Tini Q-G® Plugs 250
- Molded Cable Assemblies for Multi-Pin Interconnection Part Numbering System 251
- Standard Multi-Pin Interconnection Cables 252
- Micro Plug® Subminiature Phone Plugs 253
- Tini Plug® Miniature Phone Plugs 254
- Phono Plugs and Phono Extension Jacks 255
- Tini-Extension® Jacks 256
- Littel Plug® Phone Plugs 256-257
- Extension Jax® Phone Jacks 257
- Cable Clamp Bands, “Y” Junctions 258
- Part Numbering System 259
- Standard Cable Guide 260
- Cross Reference Guide 261

AUDIO/VIDEO PATCHCORDS 262- 267
- 1/4" Longframe Telephone Patch Cords, MIL Type 1/4" Patch Cords 262
- Combination Patch Cords and MIL Type 1/4" Twin Patch Cords 263
- Miniature TT® Braided Patch Cords 264
- Miniature TT® Molded Patch Cords and Telephone Couplers 265
- Video Patch Cords 266
- Broadcast Series 3-Conductor Bantam TT Patch Cords, Analog-AES/EBU Audio, and RS422 Patching 267

SWITCHES

PUSHBUTTON SWITCHES
- IBS Series Miniature Keyboard Switches 269
- IBS Keyboard Switch Pushbuttons 270
- US Series Uniswitch® Switches 271
- BXR Series Box Switch® Switches 272
- Button-Switch® Switches, Tini-Switch® Switches 273
- Littel-Switch® Switches 274
- Hi-D Switch® PC Mount Switches, DA-Switch Switches 275
- Cord-Switch® Cord Switches, Cordette® Cord Switches 276

* Please visit the product pages on our website for the most up-to-date product information

Push-Lite® Switches and Indicators 277-281
Series PL9000 - PL® Indicators, Pushbutton/Indicator Screens, Color Filter Snap-Insserts, Optional Mounting Barriers, Light Divider 278
Part Numbering System 279
Outline Dimensions 280-281

SLIDE SWITCHES 282-290
General Purpose Slide Switches 284-287
Miniature Slide Switches 288-290
Side-Slide®/Miniature Slide Switches 290
European Line Voltage Selector Switches 291-293

LEVER SWITCHES 294-298

GENERAL PURPOSE STACK SWITCHES 299-300

MULTIPLE STATION SWITCHES 301-302
Littel® Multi Switch 303-308
DW Multi-Switch 309-311
Tini® DW Multi-Switch 312-313
IBS Multi-Switch - Series IBS 314-315
Multi-Switch Pushbuttons 316-317

INDEX BY PART NUMBER 319-328

® Registered trademark of Switchcraft, Inc.

Note: Contact your Switchcraft Representative for price and delivery

* Please visit the product pages on our website for the most up-to-date product information

Q-G® CONNECTORS

SECTIONALIZED VIEW - A3F Plug to B3M Receptacle

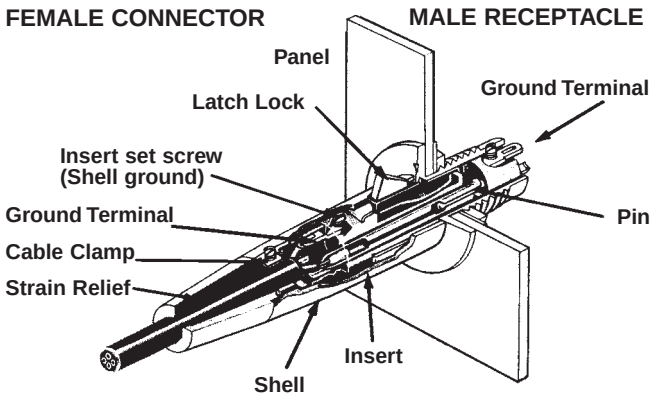

DESIGN FEATURES

CONSTRUCTION: Sturdy, die-cast zinc with satin nickel finish or Black-Velvet® finish to withstand hard use – even abuse. Vel-Tone non-reflective finish on QGP connectors only.

INSERT INSULATION: High-impact, molded thermoplastic provides high dielectric strength, and superior insulation resistance.

LOCKING: Latchlock on female plugs and receptacles locks into groove in mating male connector to prevent accidental disconnect. Manual release of latchlock is required to separate connectors. Q-G connectors are also available with FAS-DISCONNECT detent in place of latchlock. QGP has die-cast latchlock.

FAS-DISCONNECT: FAS-DISCONNECT detent permits immediate disconnect of locked connectors with a 4-pound (1.8 kg) force. FAS-DISCONNECT connectors are not recommended for use in situations where strong or violent pulls on cable may occur and cause accidental disconnect. Available on Q-G connectors only.

DUAL PRESSURE PLATES: A*F and A*M Series provides secure cable lock and strain relief for all standard size cables.

FLEX RELIEF: TPR cable flex relief bushings on cord plugs are keyed to shell. Standard bushing opening accepts cables from .21" to .3" diameter Bushings with other openings accommodate cables from .105" to .205" diameter and from .3" to .328" diameter.

CONTACTS: Q-G female connectors are copper alloy, silver-plated, tarnish-resistant; male contacts are copper alloy, silver-plated, tarnish-resistant. Gold-plated female contacts are copper alloy. Male contacts are gold-plated.

WIRING: Large, unique design solder cups make wiring fast and easy. Certain receptacles are also available with PC terminals for use with printed circuit boards.

Grounding and Shielding
Tightening the insert screw establishes continuity between ground terminal, ground contactors and connector housing. Upon engagement with a mating plug or receptacle, the ground circuit is automatically connected to the mating shell through the ground contactor. Any pin or contact can be grounded by "jumping" it to the ground terminal. Contact 1 engages before all other contacts and disengages after all other contacts.

Field-proven Switchcraft Q-G ® (Quick-Ground) 3- through 7-contact audio connectors with ground terminal and ground contactors are available in a wide range of plugs and receptacles for microphones, test equipment, instrumentation, computers, video cameras, mixing consoles, tape recorders, PA and sound reinforcement, stereo systems and many more applications.
Switchcraft Q-G® connectors feature a separate ground-terminal electrically integral with connector shell. Ground continuity between mating plugs is automatically accomplished through exclusive "Dual Point" grounding system. Socket and pin assemblies utilize "wedge-action" to insure firm, reliable positioning in connector shell. Inserts are easily removable for wiring and soldering. High-impact thermoplastic insures long reliable insert assembly life. Female connectors have latch lock feature to hold connectors firmly together. Plugs and receptacles are mechanically keyed for proper mating. Q-G (*) Series 3-, 4-, 5-, 6-, and 7-pin/contact connectors offer 4-, 5-, 6-, 7-, and 8-pin contact versatility when ground-terminal is used. Switchcraft QGP connectors; are compatible with 3- and 4-contact (Neutrik, Amphenol 91-850 and Excellite 91-450 Series, and Cannon XLR-3, XLR-4): 5-contact (Neutrik, Cannon XLR-5 and Amphenol Excellite 91-450 Series).

Captive Design® Insert Screws

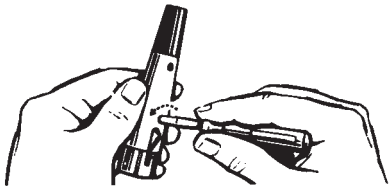

Insert screw engages as any conventional screw, except it is lefthand threaded. To disassemble the connector, turn screw counterclockwise down into insert (see illustration).

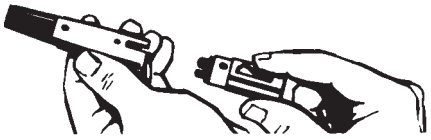

Insert assembly is now readily removed from shell. Note "Ground Terminal" area – large soldering cups make cable installation fast and easy. Unitized 1-piece insert eliminates possible loss of latchlock and spring.

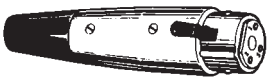

To reassemble, replace insert assembly into shell, align insert screw under hole in shell and secure insert by turning insert screw clockwise. This "wedges" insert against interior of shell providing a rigid connector assembly and positive electrical continuity between ground terminal and shell (see illustration).

DIMENSIONS ARE FOR REFERENCE ONLY Inch (mm)

* Please visit the product pages on our website for the most up-to-date product information

Q-G® CONNECTOR PART NUMBERING

Series		Number of Contacts	Gender	Options	
A	CORD PLUG WITH SCREW CABLE CLAMP	3-7	M MALE	D	FAS-DISCONNECT (FEMALE CONNECTORS)
AA	CORD PLUG WITH CRIMP CABLE CLAMP		F FEMALE	B	BLACK EPOXY FINISH
AAA	CORD PLUG WITH TWIST ON HANDLE				
B	FRONT PANEL MOUNT USING NUT		FM BOTH (S SERIES)	ST	STRAIGHT PC TAILS
C	FRONT PANEL MOUNT - CIRCULAR			RA	RIGHT ANGLE PC TAILS
D	FRONT PANEL MOUNT - RECTANGULAR			M	MOMENTARY SWITCH ACTION (T SERIES ONLY)
E	MODULAR FRONT PANEL MOUNT			PC	PC TERMINALS (Y SERIES ONLY)
G	WALL PLATE - 1 B SERIES MALE			N	KNURLED COUPLING NUT (L SERIES ONLY)
H	WALL PLATE - 2 B SERIES MALES			L	FLEX RELIEF FOR .250" TO .328" CABLE O.D.
J	WALL PLATE - 1 D SERIES FEMALE			S	SEE NOTE 1.
K	WALL PLATE - 2 D SERIES FEMALE			AU	GOLD CONTACTS
L	MICROPHONE ADAPTER - INTERNAL THREAD			H	HOUSING ONLY
M	MICROPHONE ADAPTER - EXTERNAL THREAD			OPTIONS SHOWN IN ORDER OF APPEARANCE	
N	CAP PLUG			Z	SCREWLESS STRAIN RELIEF
P	GOOSENECK MOUNT				
QG	CONNECTOR INSERT				
R	RIGHT-ANGLE CORD PLUG				
S	MALE/FEMALE BARREL ADAPTER				
T	CORD PLUG WITH ON-OFF SWITCH				
W	RIGHT-ANGLE PANEL MOUNT				
Y	REAR PANEL MOUNT				

NOTE 1: S HAS DIFFERENT DESIGNATIONS DEPENDING ON THE SERIES.
FOR A, AA, AND T SERIES: SMALL FLEX RELIEF FOR .105" TO .205" CABLE OUTSIDE DIAMETER
FOR B, C, AND D SERIES: SANDED FRONT FACE FINISH
FOR G, H, J, AND K SERIES: STAINLESS STEEL WALL PLATE (STANDARD)
FOR N SERIES: SHORTING WIRING INSTALLED
NOTE 2: J, K AND T SERIES AVAILABLE IN FEMALE GENDER ONLY.
G, H, L, M, N, AND W SERIES AVAILABLE IN MALE GENDER ONLY.

PROFESSIONAL SERIES Q-G® CONNECTOR PART NUMBERING SYSTEM

Series		Number Of Contacts	Model	
PROFESSIONAL SERIES		3	22	FEMALE CORD PLUGS
QGP	PROFESSIONAL SERIES CORD PLUG WITH CRIMP CABLE CLAMP		23	MALE CORD PLUGS
AQGP			62	RECTANGULAR FEMALE PANEL MOUNT
			63	RECTANGULAR MALE PANEL MOUNT

DIMENSIONS ARE FOR REFERENCE ONLY Inch (mm)

® Registered trademark of Switchcraft, Inc.
Note: Contact your Switchcraft Representative for price and delivery

* Please visit the product pages on our website for the most up-to-date product information

Q-G ® CORD PLUG CONNECTORS (continued)

Q-G® AUDIO CONNECTORS A, AA, AND QGP SERIES

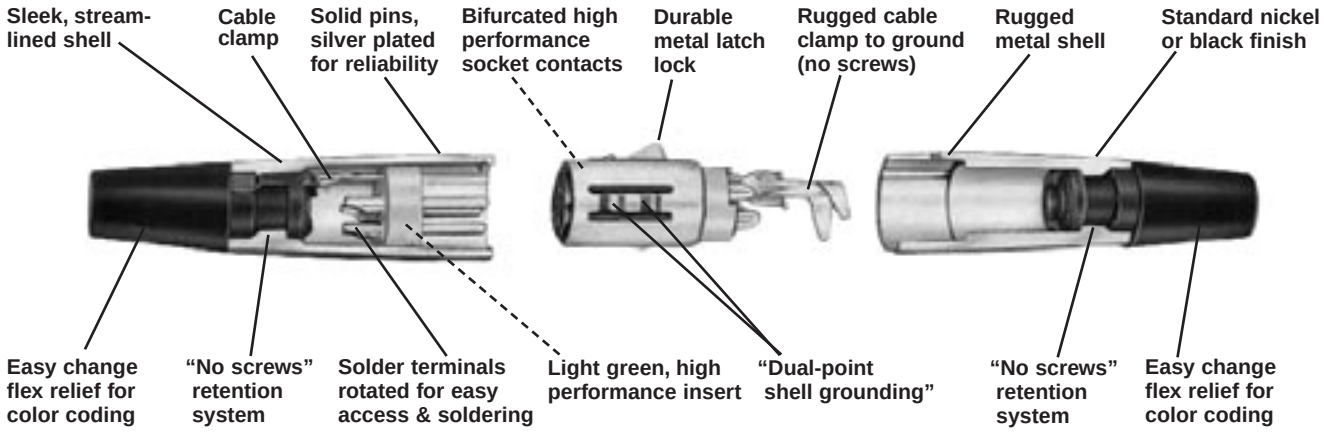

QGP connectors (3 contacts only) feature Vel-Tone® non-reflective finish, gray TPR flex relief and plated pins/contacts for the most demanding applications.
Preferred by audio professionals the world over, Switchcraft® QG® connectors feature unsurpassed durability and a choice of finishes and contact platings. Features include:

- High performance inserts in traditional Switchcraft® green or black.
- Solder terminals rotated for easier access and soldering.
- All metal housing.

AA Series Only

- Rugged 1-piece cable clamp to relieve pulling and twisting stresses on terminations.
- No Screws flex relief retention system.
- Integral bump shell grounding system.

SPECIFICATIONS

ELECTRICAL

Contact Resistance: 50 milliohm maximum, per pole.
Current Rating: 3 pole – 15A, 4 pole - 10A, 5 and 6 pole – 7.5A, 7 pole – 5A @ 125VAC.
Insulation Resistance: 1,000 MΩ, minimum.
Dielectric Withstanding Voltage: 1,000 V (rms).
Capacitance: 2 pF between pins and 4 pF between pins and shell, maximum (AA3M and AA3F).

MECHANICAL

Insertion/Withdrawal Forces: 7 pound maximum, 5 pound nominal, insertion; 7 pound maximum, 5 pound nominal, withdrawal.
Wire Size: #12 wire gauge solid; #14 wire gauge stranded (3 contact). #14 wire gauge solid; #16 wire gauge stranded (4 contact). #16 wire gauge solid; #18 wire gauge stranded (5 and 6 contact). #18 wire gauge solid; #20 stranded (7 contact). (Q-G and QGP).

MATERIAL
Q-G CONNECTORS (A AND AA SERIES)

Shell: Die-cast zinc. Satin nickel finish, black velvet.
Insert Insulation: Molded thermoplastic.
Socket Contacts: Silver-plated copper alloy tarnish-resistant; bifurcated on 3-contact type. Gold is available
Pin Contacts: Silver-plated copper alloy. Resists tarnishing, and provide excellent electrical conductivity. Gold is available.
Latchlock: High-strength die-cast zinc.
Latch Release: Steel, nickel-plated.
Latch Detent: Formed stainless steel.
Insert Screw: Stainless steel.
Flex Relief: TPR (thermoplastic rubber).

QGP CONNECTORS

Shell: Die-cast zinc, non-reflective gray Vel-Tone® finish.
Socket Contacts: Gold-plated copper alloy
Pin Contact: Gold-plated copper alloy

FACE VIEW OF PIN (MALE) INSERTS

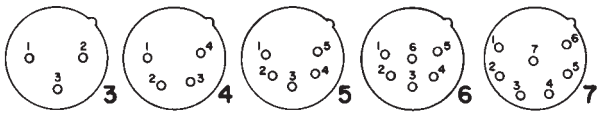

INSERT CONFIGURATIONS

DIMENSIONS ARE FOR REFERENCE ONLY Inch (mm)

* Please visit the product pages on our website for the most up-to-date product information

Q-G® CORD PLUG CONNECTORS (continued)

AA(*)F CORD PLUG

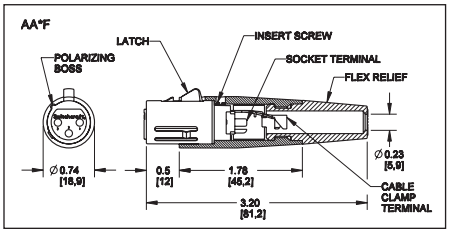

AA(*)FD CORD PLUG

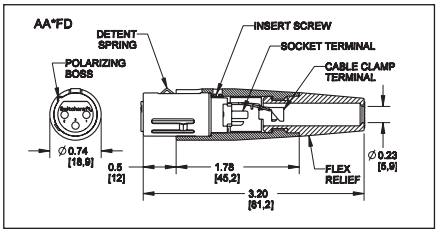

AA(*)M CORD PLUG

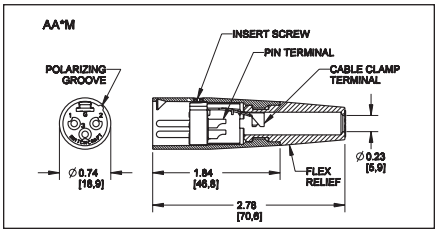

PART NUMBERS - FEMALE CORD PLUGS

Advanced Q-G® Cord Plugs, Series AA(*)F and AQGP						
AA3F	AA3FB	◊AA3FBAU	◊AA3FD	◊AA3FL	◊AQGP322	3
—	—	—	AA3FLD		—	3
◊AA4F	◊AA4FB	—	◊AA4FD	◊AA4FL	—	4
◊AA5F	◊AA5FB	—	◊AA5FD	◊AA5FL	—	5
◊AA6F	◊AA6FB	—	◊AA6FD	◊AA6FL	—	6
◊AA7F	◊AA7FB	—	◊AA7FD	◊AA7FL	—	7

◊ Available on special order only; contact Switchcraft for price and delivery.

PART NUMBERS - MALE CORD PLUGS

Advanced Q-G® Cord Plugs, Series AA(*)M and AQGP					
AA3M	AA3MB	◊AA3MBAU	◊AA3ML	◊AQGP323	3
◊AA4M	—	—	◊AA4ML	—	4
◊AA5M	◊AA5MB	—	◊AA5ML	—	5
◊AA6M	—	—	◊AA6ML	—	6
◊AA7M	—	—	◊AA7ML	—	7

All above part numbers have black flex relief installed. Contact Switchcraft for color flex relief.

A(*)F CORD PLUG



Straight female cord plug with standard latchlock. Available in 3-7 pin versions.

A(*)FD CORD PLUG



Straight female cord plug with FAS-DIS-CONNECT detent.

A(*)M CORD PLUG



Straight male cord plug.

*Number of insert contacts or pins must be specified to complete part number.

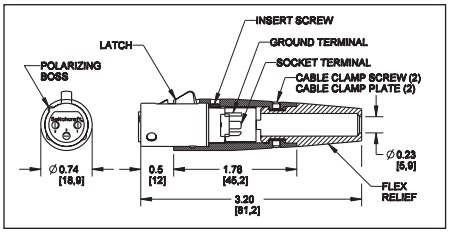

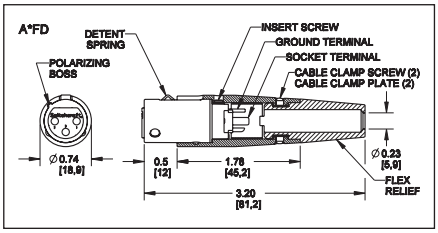

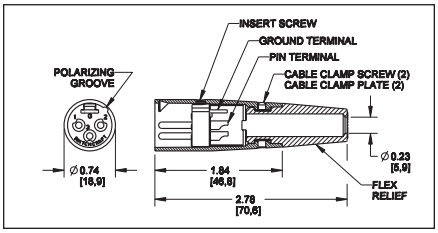

PART NUMBERS - FEMALE CORD PLUGS

Standard Q-G® Cord Plugs, Series A(*)F and QGP						
Satin Nickel Finish Contacts	Black Finish Silver [1]	Black Finish Gold [1]	Fas-Dis-Connect	Large Flex Relief [2]	QGP Series	Insert
A3F	A3FB	A3FBAU	◊A3FD	A3FL	QGP322	3
A3FS[3]	—	—	—	—	—	3
A4F	A4FB	A4FBAU	◊A4FD	A4FL	—	4
A5F	A5FB	A5FBAU	◊A5FD	◊A5FL	—	5
A6F	A6FB	A6FBAU	—	—	—	6
A7F	A7FB	A7FBAU	—	—	—	7

1. Contact plating.
2. Accepts cables from .25" (6.35 mm) to .328" (8.33 mm) diameter
3. Accepts cables from .105" (2.7 mm) to .205" (5.2 mm)

◊ Available on special order only; contact Switchcraft for price and delivery.

PART NUMBERS - MALE CORD PLUGS

Standard Q-G® Cord Plugs, Series A(*)M and QGP					
Satin Nickel Finish	Black Finish Silver [1]	Black Finish Gold [1]	Large Flex Relief [2]	QGP Series	Insert Contacts
A3M	A3MB	A3MBAU	A3ML	QGP323	3
A3MS [3]	—	—	—	—	3
A4M	A4MB	A4MBAU	A4ML	—	4
A5M	A5MB	A5MBAU	◊A5ML	—	5
A6M	—	A6MBAU	—	—	6
A7M	—	A7MBAU	—	—	7

All above part numbers have black flex relief installed. Contact Switchcraft for color flex relief.

◊ Available on special order only; contact Switchcraft for price and delivery.

DIMENSIONS ARE FOR REFERENCE ONLY Inch (mm)

® Registered trademark of Switchcraft, Inc.
Note: Contact your Switchcraft Representative for price and delivery

* Please visit the product pages on our website for the most up-to-date product information

Q-G® CONNECTORS (continued)

Q-G® COLOR FLEX RELIEFS

Rainbow color cable strain relief bushings can be specified to match or complement equipment decors or code individual or grouped connections for quick recognition. On special order, tan, pink and dark blue are available. Bushings accommodate cables from .21" to .30" diameter. Prepackaged, 25 per bag.

Part Numbers 3 Pins/Contacts		Flex Relief Color	Flex Relief Only
Female	Male		
A3F	A3M	Black	SR00
◊A3F01	◊A3M01	Brown	SR01
◊A3F02	◊A3M02	Red	SR02
◊A3F03	◊A3M03	Orange	SR03
◊A3F04	◊A3M04	Yellow	SR04
◊A3F05	◊A3M05	Green	SR05
◊A3F06	◊A3M06	Blue	SR06
◊A3F07	◊A3M07	Violet	SR07
◊A3F08	◊A3M08	Gray	SR08
◊A3F09	◊A3M09	White	SR09

◊ Special order only; contact Switchcraft for price and delivery.

Q-G® FLEX RELIEF

Flex relief bushing with small opening accommodates cables from .105" (2.7 mm) to .205" (5.2 mm). Standard size bushing accepts cables from .210" (5.3 mm) to .300" (7.6 mm) outside diameter. Bushing with large opening accommodates cables from .300" (7.6 mm) to .328" (8.3 mm). Larger cables are often needed for multiple-conductor instrumentation. Code letter "L" in last or second to last digit in part number indicates plug with large bushing. Code letter "S" in last or second to last digit in part number indicates plug with smaller bushing.

SWITCHCRAFT PART NUMBER ◊K255
Package of 100 cable clamp screws.

◊ Special order only; contact Switchcraft for price and delivery.



Small Cables
.105 (2.7) to .205 (5.2)



Standard Cables
.210 (5.3) to .300 (7.6)

Large Cables
.300 (7.6) to .328 (8.3)

DIMENSIONS ARE FOR REFERENCE ONLY Inch (mm)

* Please visit the product pages on our website for the most up-to-date product information

AAA CONNECTORS





AAA SERIES Q-G® TWIST CONNECTOR

Switchcraft introduces the AAA Series or Q-G® Twist XLR connectors. The Q-G® Twist Series is available in male or female cord plug, 3 through 7 pins or contacts. The unique features are the easy twist on combination handle/strain relief, and the reduced number of parts to assemble. With the insert built into the front shell, and the strain relief preloaded into the handle, the end user has only two parts to assemble – slide the handle onto the cable, solder the terminations, and twist on the handle. As the handle is tightened, the strain relief tightens around the outer jacket of the cable. A ramp on the strain relief keeps it from rotating around the cable jacket and twisting the cable. The strain relief was designed to accommodate the most popular cable sizes. A rugged die-cast metal handle insures optimum protection, and increases signal shielding. Popular options include black and gold finishes, as well as a lower cost plastic handle version.

FEATURES AND BENEFITS

- Only two pieces to assemble
- Easy twist on handle reduces assembly time
- Rugged die-cast metal handle
- Accepts cable OD's (.100" – .285")
- Black finish available
- Gold-plated pins/contacts available
- Lower cost plastic handle version available

APPLICATIONS

- Audio
- Medical
- Instrumentation
- Process Controls

SPECIFICATIONS

ELECTRICAL

Contact Resistance: 50 milliohm maximum, per pole.
Current Rating @ 125VAC:
3 pole – 15A
4 pole –10A
5 & 6 pole – 7.5A
7 pole – 5A
Insulation Resistance: 1,000 MΩ, minimum.
Dielectric Withstanding Voltage: 1,000 V (rms)
Capacitance: ≤3 pF between pins and ≤6 pF between pins and shell, maximum

MECHANICAL

Insertion/Withdrawal Forces: 10 lbs. maximum, 8 lbs. nominal / 7 lbs. maximum, 5 pounds nominal.
Wire Size:
3 Contact
#12 wire gauge solid #14 wire gauge stranded
4 Contact
#14 wire gauge solid #16 wire gauge stranded
5 & 6 Contact
#16 wire gauge solid #18 wire gauge stranded
7 Contact
#18 wire gauge solid #20 wire gauge stranded

MATERIAL

Shell: Die-Cast zinc with nickel finish or black chrome.
Handle: Die cast with nickel finish or black chrome. Also black thermoplastic handle available.
O Ring: TPR (Thermoplastic rubber).
Insert Insulation: Molded thermoplastic.
Socket Contacts: Silver plated copper alloy tarnish resistant; bifurcated on 3 and 4 contact types. Gold is available.
Pin Contacts: Silver plated copper alloy. Resists tarnishing, and provides excellent electrical conductivity. Gold is available.
Latch lock: High strength die cast zinc.
Strain Relief: TPR
Flex Relief: TPR (Thermoplastic rubber)

CONNECTOR PART NUMBER SCHEME

Series	Pins/Contacts	Gender	Handle Material	Housing Finish	Terminal Finish	Z
AAA	3-7 pins	F: Female	P: Plastic	B: Black	AU: Gold	New Strain Relief
	3-7 pins	M: Male	Blank: Metal	Blank: Nickel	Blank: Silver	

DIMENSIONS ARE FOR REFERENCE ONLY Inch (mm)

® Registered trademark of Switchcraft, Inc.
Note: Contact your Switchcraft Representative for price and delivery

* Please visit the product pages on our website for the most up-to-date product information

AAA CONNECTORS (continued)

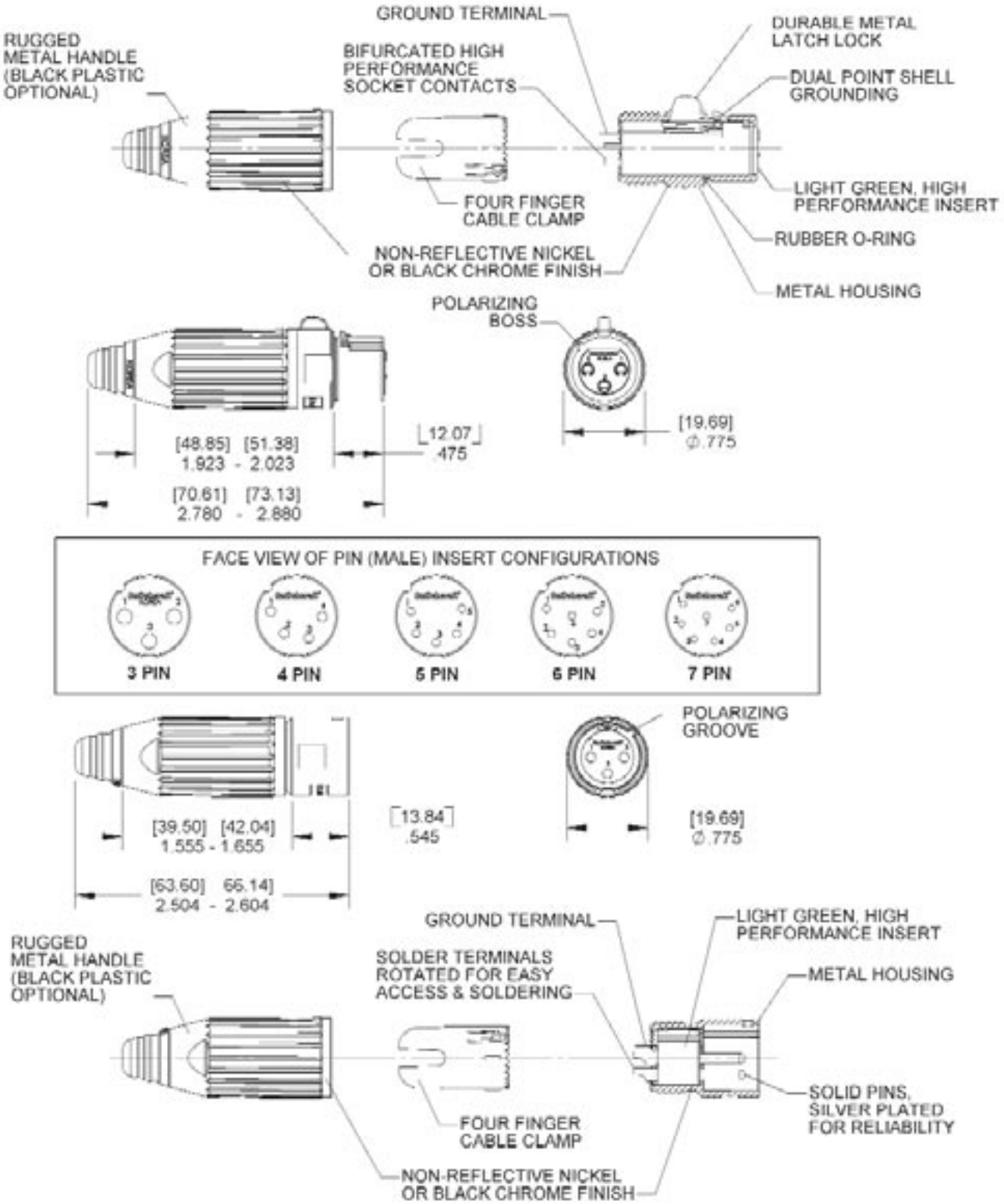

DIMENSIONS ARE FOR REFERENCE ONLY Inch (mm)

* Please visit the product pages on our website for the most up-to-date product information

Q-G® CONNECTORS (continued)

R(*)FZ CORD PLUG

Right angle, female cord mount plug, latching. New style incorporates an insert that can rotate every 45° for added flexibility in tight applications. Also utilizes the new strain relief system with twist-on handle.

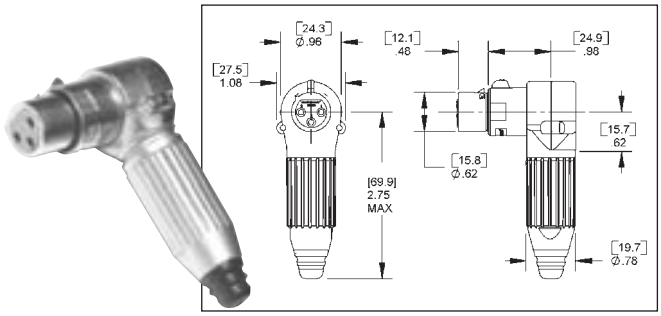

Part Number	Insert Contacts
R3FZ	3
R4FZ	4
R5FZ	5
R6FZ	6
R7FZ	7

Accepts cable O.D.'s .100"–.285"
For black finish, add "B" suffix.
For black/gold finish, add "BAU" suffix.

R(*)MZ CORD PLUG

Right angle, male cord mount plug, latching. New style incorporates an insert that can be rotated every 45° for added flexibility in tight applications. Also utilizes the new strain relief system with twist-on handle.

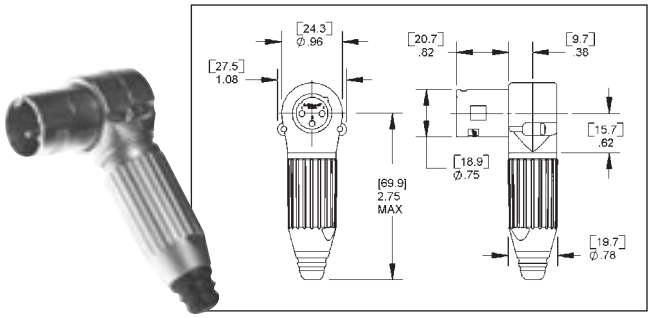

Part Number	Insert Pins
R3MZ	3
R4MZ	4
R5MZ	5
R6MZ	6
R7MZ	7

Accepts cable O.D.'s .100"–.285"
For black finish, add "B" suffix.
For black/gold finish, add "BAU" suffix.

P(*)F MICROPHONE PLUG

Female microphone plug for gooseneck mount. Fits standard gooseneck with external 5/8-27 thread. Microphone plugs directly into connector. (Gooseneck not supplied.)

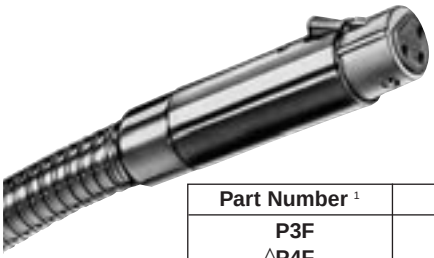

Part Number [1]	Insert Contacts
P3F	3
◊P4F	4
◊P5F	5

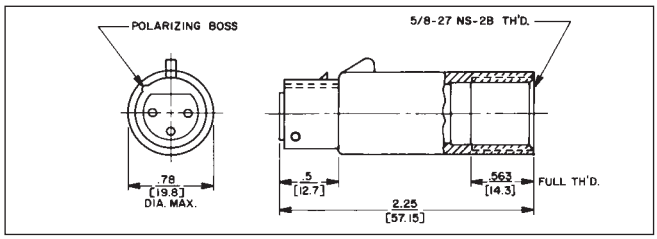

1. Satin Nickel Finish. (standard)
2. Large flex relief accepts cable from .25" to .328" diameter. (optional)
3. Gold-plated contacts. (optional)

◊ Available on special order only; contact Switchcraft for price and delivery.

P(*)M GOOSENECK PLUG

Male plug for gooseneck mount. Fits standard gooseneck with internal 5/8-27 thread. Use on gooseneck with microphone plug on opposite end. Plugs directly into female receptacle. (Gooseneck not supplied.)



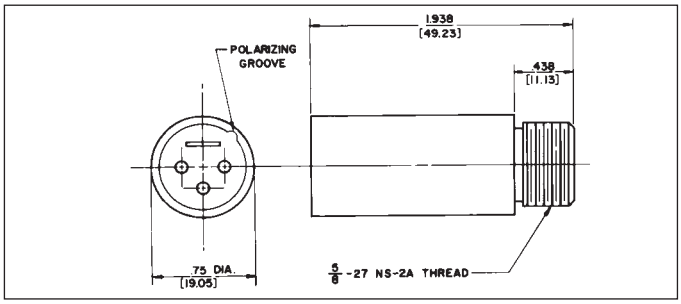

Part Number [1]	Insert Pins
P3M	3
◊P4M	4
◊P5M	5

DIMENSIONS ARE FOR REFERENCE ONLY Inch (mm)

® Registered trademark of Switchcraft, Inc.
Note: Contact your Switchcraft Representative for price and delivery

* Please visit the product pages on our website for the most up-to-date product information

Q-G® CORD PLUG CONNECTORS AND RECEPTACLES

T(*)F AND T(*)FM CORD PLUG WITH ON-OFF SWITCH

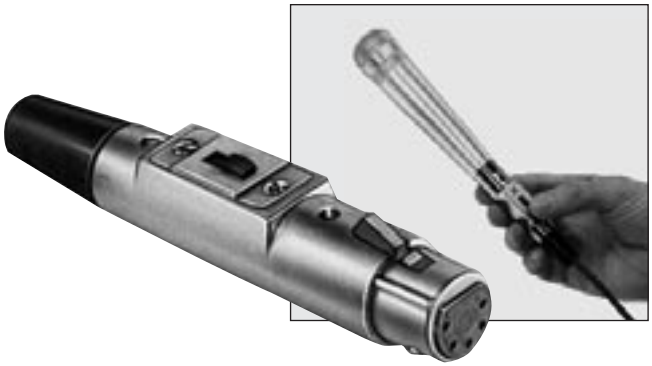

Part Number	Part Number	Insert Contacts
T3F	◊T3FL	3
◊T3FM	◊T3FLM	3
◊T4F	◊T4FL	4
◊T4FM	◊T4FLM	4

T(*)F Straight female cord plug with DPDT (2-C) locking on-off switch; standard latchlock.
T(*)FM Straight female cord plug with SPDT (1-C) momentary on-off switch; standard latchlock.
Slide switches rated 500 mA, 125V (AC or DC). Mounting screws are supplied.

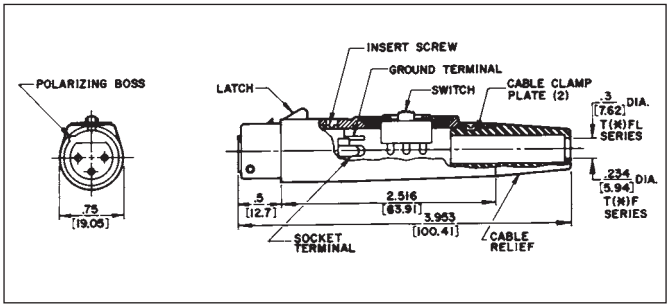

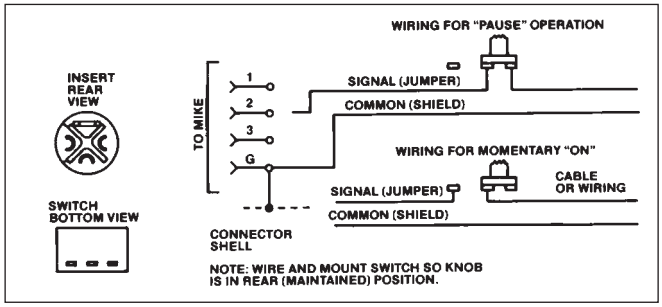

D(*)M, D(*)F AND D(*)FD RECEPTACLES



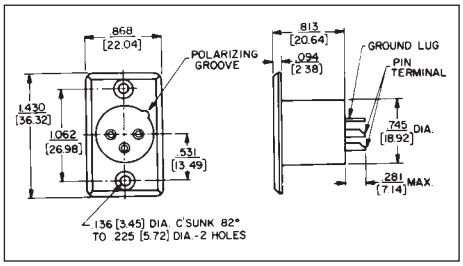



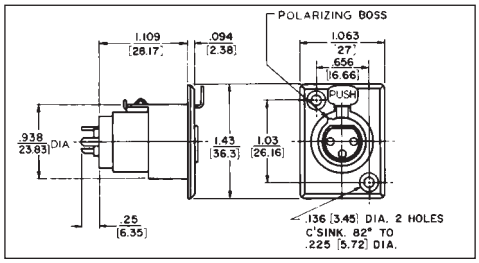

Studio quality black and gold Q-G® receptacle with black housing and gold contacts is designed for low/stable contact resistance and withstands corrosion where highest quality is required for recording and broadcast studio equipment, consoles, and other applications.

D(*)M SERIES – Male receptacle for panel or chassis mounting. Special rectangular flange permits close spacing on crowded panels, has two .136" (3.45mm) diameter countersunk holes for #5-40 flat head mounting screws (not supplied). Mounts from front of panel or chassis in .766" (19.45) diameter hole. Satin nickel finish (Series D*M) or black finish (Series D*MB, or D*MBAU).

D(*)F SERIES – Female receptacle for panel or chassis mounting. Flange has two .136" (3.45 mm) diameter countersunk holes for #5-40 flat head mounting screws (not supplied). Mounts from front of panel or chassis in .953" (24.21 mm) diameter hole. Series D(*)F has standard latchlock; Series D(*)FD has FAS-DISCONNECT detent. Satin nickel finish (Series D*F and D*FD) and "Black-Velvet" finish (Series D*FBAU).

Nickel Finish	Black Finish		Detent	QGP Series[1]	Pins
	Silver	Gold			
D3M	D3MB	D3MBAU	—	QGP363	3
D4M	D4MB	D4MBAU	—	—	4
D5M	D5MB	D5MBAU	—	—	5
D6M	D6MB	D6MBAU	—	—	6
D7M	D7MB	D7MBAU	—	—	7
D3F	D3FB	D3FBAU	D3FD	QGP362	3
D4F	D4FB	D4FBAU	◊D3FDB	—	4
D5F	D5FB	D5FBAU	—	—	5
D6F	D6FB	D6FBAU	◊D6FDB	—	6
D7F	D7FB	D7FBAU	—	—	7

* Number of insert contact or pins must be specified to complete part number.
◊ Available on special order only; contact Switchcraft for price and delivery.
1 Non-reflective gray finish, gold-plated pins.

DIMENSIONS ARE FOR REFERENCE ONLY Inch (mm)

* Please visit the product pages on our website for the most up-to-date product information

Q-G® RECEPTACLES (continued)

B(*)F RECEPTACLE

Panel-mount female receptacle. Mounts with spanner nut from front of panels up to .4375" (11.11 mm) thick. Slot in threaded part of housing permits non-turn mounting. Requires 1.25" (31.75 mm) diameter minimum mounting hole. Spanner nut is die-cast zinc with satin nickel finish (Series B*F) or black finish (Series B*FB).



Part No.[1]	Part No. [2]	Insert Contacts
B3F	B3FB	3
B4F	—	4
B5F	—	5
B6F	—	6
B7F	—	7

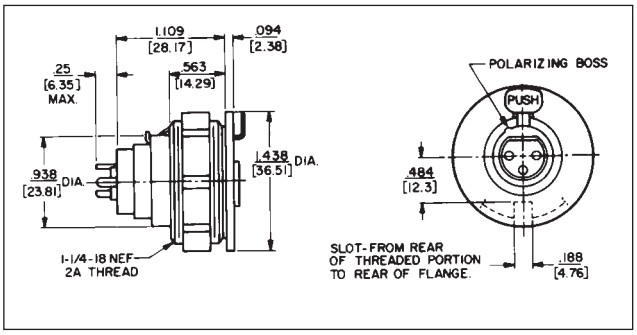

B(*)M RECEPTACLE

Panel-mount male receptacle. Mounts with locknut from front of panels up to .250" (6.35 mm) thick. Requires .812" (20.64 mm) diameter mounting hole. For non-turning mounting, can be keyed to "D" shaped panel hole, or S3519 mounting adapter can be used. Satin nickel finish (Series B*M) or black finish (Series B*MB).



Part No.[1]	Part No.[2]	Insert Pins
B3M	B3MB	3
B4M	—	4
B5M	—	5
B6M	—	6
B7M	—	7

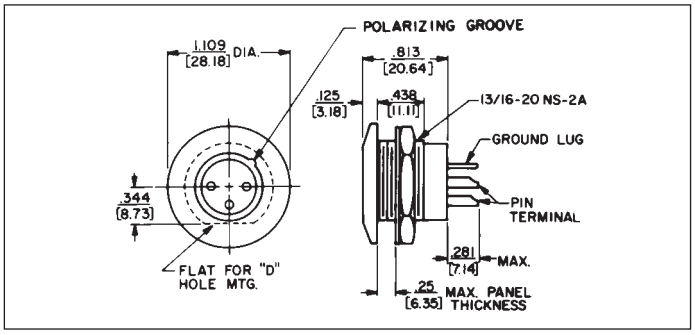

C(*)F RECEPTACLE

Female receptacle for panel or chassis mounting. Flange has three .140" (3.57 mm) diameter holes for #5-40 mounting screws (not supplied). Mounts from front of panel or chassis in 0.953" (24.21 mm) diameter hole.



Part No.[1]	Part No. [5]	Insert Contacts
C3F	◊QGP326	3
C4F	—	4
C5F	—	5
C6F	—	6
C7F	—	7

◊ Special order only. Contact Switchcraft.

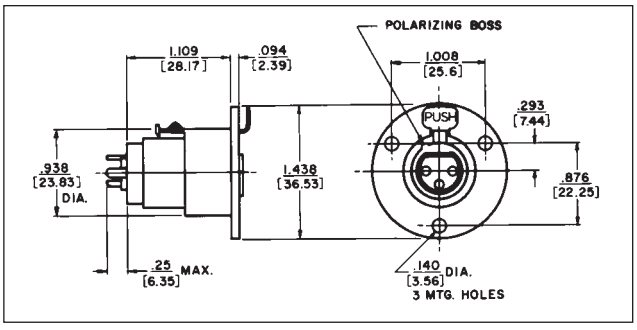

C(*)M RECEPTACLE

Male receptacle for panel or chassis mounting. Flange has three .140" (3.57 mm) diameter holes for #5-40 mounting screws (not supplied). Mounts from front of panel or chassis in .766" (19.45 mm) diameter hole.



Part No. [1]	Part No.[5]	Insert Pins
C3M	◊QGP327	3
C4M	—	4
C5M	—	5
C6M	—	6
C7M	—	7

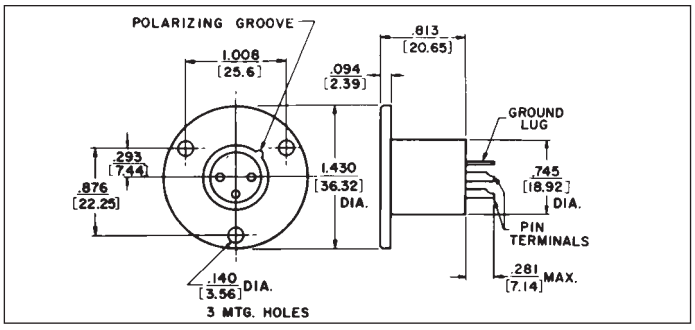

1. Satin nickel finish. (standard) 2. "Black-Velvet" finish. (optional) 3. Gold-plated contacts. (optional) 4. Fas-disconnect detent. (optional)
5. Non-reflective gray finish, gold-plated pins. (standard)

DIMENSIONS ARE FOR REFERENCE ONLY Inch (mm)

® Registered trademark of Switchcraft, Inc.
Note: Contact your Switchcraft Representative for price and delivery

* Please visit the product pages on our website for the most up-to-date product information

E SERIES RECEPTACLES

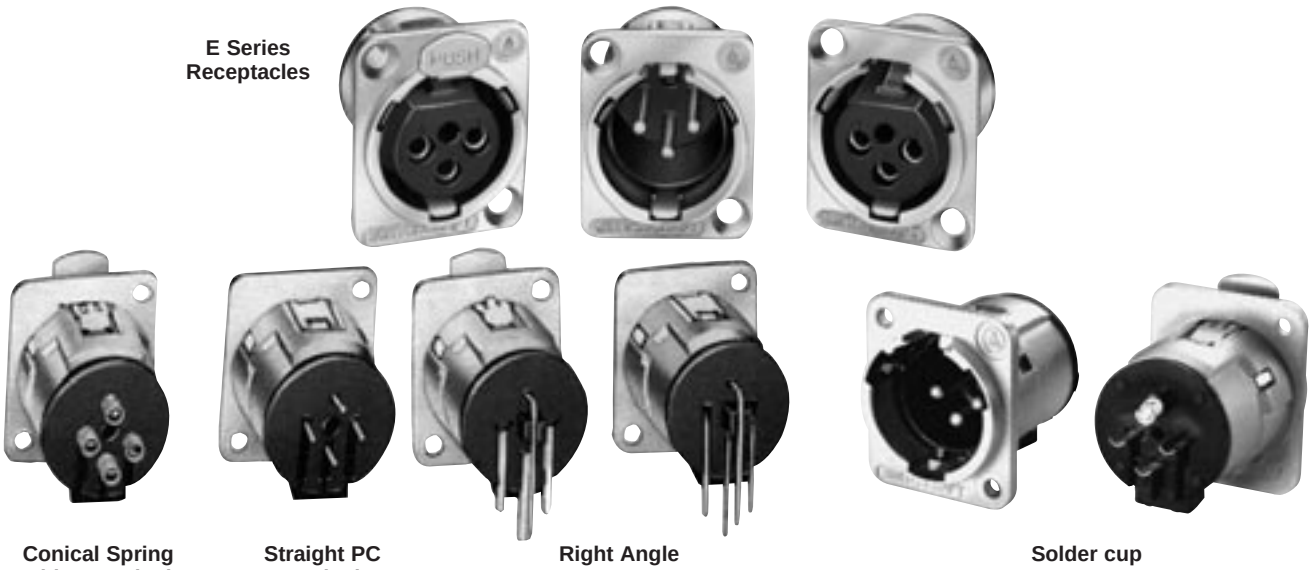

E Series Receptacles

Conical Spring Solder Terminals

Straight PC Terminals

Right Angle PC Terminals

Solder cup

E Series Q-G® Receptacles are available with quick release inserts. Quick insert release is accomplished by turning screw lock from front of insert. Insert can then be removed from the rear. For PC board applications, insert can be removed/assembled to the housing while soldered to the PC board.

E Series receptacles can be specified as complete assemblies, or as separate inserts and housings. Stocking separate inserts and housings offer considerable cost and time savings by minimizing inventory and maximizing configuration possibilities.

FEATURES

- Replaces Neutrik D Series
- 3-pin contact; male and female types
- Both male and female fit in same panel cutout
- Choice of 4 terminations; solder cups, conical springs, straight or right angle PC terminals.
- Inserts and housings can be specified separately
- Quick release inserts for ease of removal
- Locking receptacles
- Protected ground clip minimizes scooping damage
- Insert lock detent resists disassembly from shock or vibration during normal handling and transportation
- Silver and gold-plated contacts available
- Rugged metal shells; black or satin nickel finishes
- Through-the-shell ground connection and all-metal shells for greater shielding effectiveness
- Compatible with Switchcraft Q-G ®, QGP and other connectors with similar configurations

QUICK RELEASE INSERT

In two simple steps, inserts can be released while housing stays fastened to the panel.

1. With a small screwdriver, twist insert locking screw from front of insert.
2. Remove insert from the rear of the housing.

TERMINALS

Four terminations are available on E Series receptacles:

1. **Conical Spring Solder terminals** – conical spring on each pin holds wire in place providing constant pressure during soldering process. This effectively acts as a third hand, assuring a high quality solder termination. Housing mounts to panel.
2. **Straight PC terminals** – direct termination to PC board. Housing mounts to panel.
3. **Right-angle PC terminals** - direct termination to PC board at a right-angle. Housing mounts to panel.
4. **SC** - Solder cup

SPECIFICATIONS

ELECTRICAL

Contact Resistance: 50 milliohms maximum, per pole.
Current Rating: 15A
Insulation Resistance: 2 X 10^6 MΩ
Dielectric Resistance: 1,000 V rms
Capacitance: 10 pF

MECHANICAL

Insertion/Withdrawal Forces: 7 pounds maximum/ 5 pounds nominal insertion; 7 pounds maximum/ 5 pounds nominal withdrawal.
Life: 10,000 operations (minimum).

ENVIRONMENTAL

Thermal Range: -55° C to +85° C
Humidity: Meets MIL-STD-202F, method 106E.
Thermal Shock: Meets MIL-STD-202F, method 107D.
Salt Spray: Meets MIL-STD-202F, method 101D.

MATERIAL

Shells: Die-cast; satin-nickel or Black Velvet.
Inserts: Glass-filled thermoplastic.
Socket Contacts: Copper alloy, silver- or gold-plated.
Pin Contacts: Copper alloy, silver- or gold-plated.
Latch Release: Steel, nickel-plated.
Insert Locking Cam: Die-cast zinc.

DIMENSIONS ARE FOR REFERENCE ONLY Inch (mm)

* Please visit the product pages on our website for the most up-to-date product information

E SERIES PART NUMBERING SYSTEM

CONNECTOR PART NUMBER SCHEME

Series	Pins/ Contacts	Gender	Fas-disconnect Option	Termination Style	Housing Finish	Terminal Finish	Mounting Hole Options
E	3-5 pins	F: Female M: Male	D: Fas-disconnect Blank: Standard locking	ST: Straight PC terminals RA: Right angle PC terminals SC: Solder cups Blank: Conical springs*	B: Black Blank: Nickel	AU: Gold Blank: Silver	M3: M3 x 0.5 thread 440: #4-40 thread Blank: Counter-sunk hole

HOUSING ONLY PART NUMBER SCHEME

Series	Pins/ Contacts	Housing Finish	Mounting Hole Options
E	F: Female M: Male	B: Black Blank: Nickel	M3: M3 x 0.5 thread 440: #4-40 thread Blank: Counter-sunk hole

INSERT ONLY PART NUMBER SCHEME

Series	Pins/ Contacts	Gender	Fas-disconnect Option	Termination Style	Housing Finish	Terminal Finish
E	3-5 pins	F: Female M: Male	D: Fas-disconnect Blank: Standard locking	ST: Straight PC terminals RA: Right angle PC terminals SC: Solder cups Blank: Conical springs*		AU: Gold Blank: Silver

*3-pin only

DIMENSIONS ARE FOR REFERENCE ONLY Inch (mm)

® Registered trademark of Switchcraft, Inc.
Note: Contact your Switchcraft Representative for price and delivery

* Please visit the product pages on our website for the most up-to-date product information

E SERIES

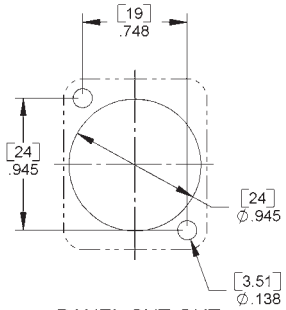

PANEL CUT-OUT
FRONT OR REAR MOUNT

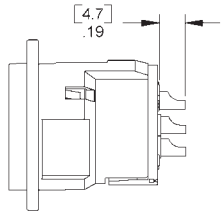

MALE SOLDER CUP
OPTION "SC"

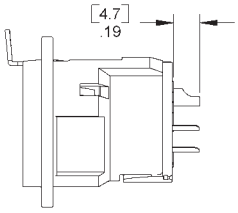

FEMALE SOLDER CUP
OPTION "SC"

REAR MOUNT OPTIONS

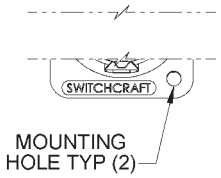

MOUNTING
HOLE TYP (2)

OPTION "M3"
M3 x 0.5 THREADED HOLES

OPTION "440"
#4-40 THREADED HOLES

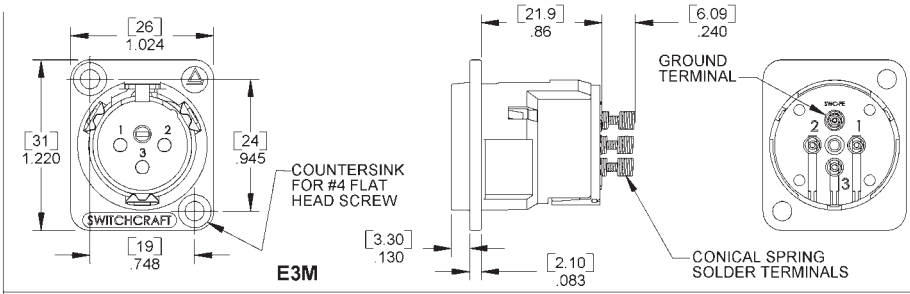

E3M

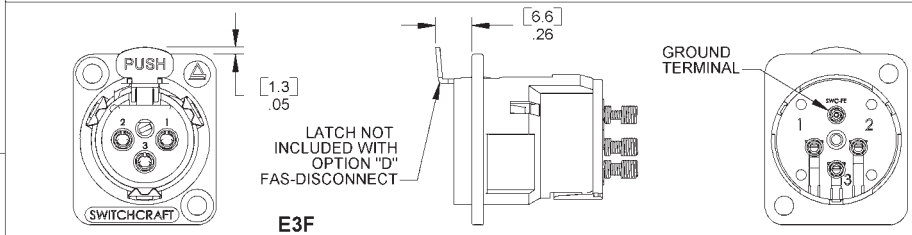

E3F

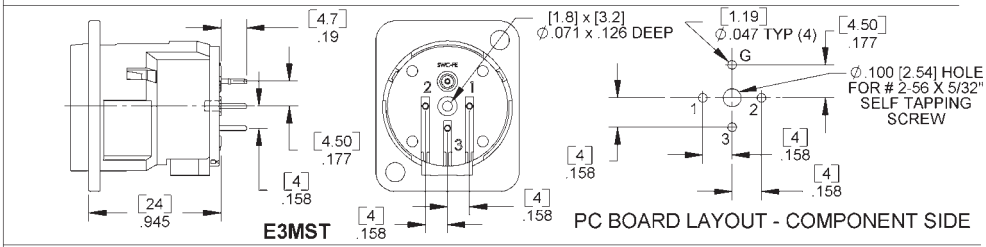

E3MST

PC BOARD LAYOUT - COMPONENT SIDE

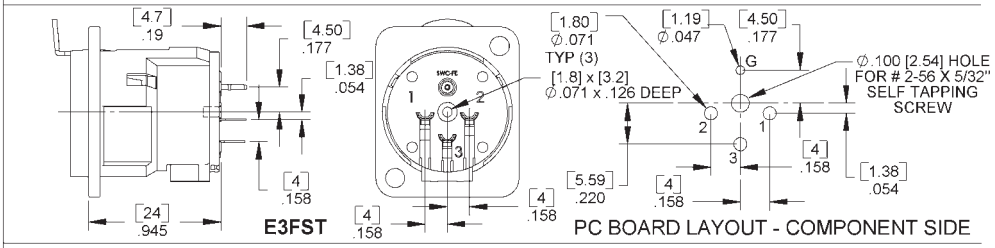

E3FST

PC BOARD LAYOUT - COMPONENT SIDE

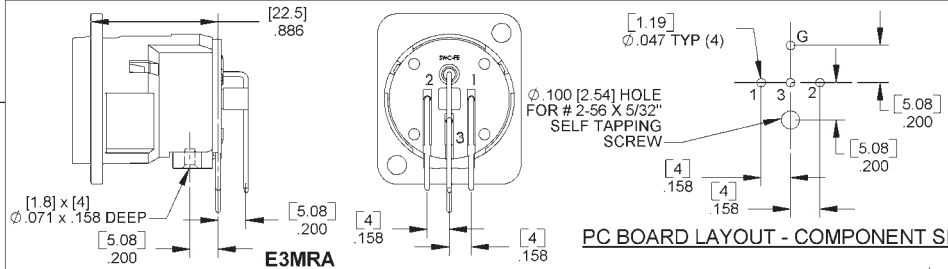

E3MRA

PC BOARD LAYOUT - COMPONENT SIDE

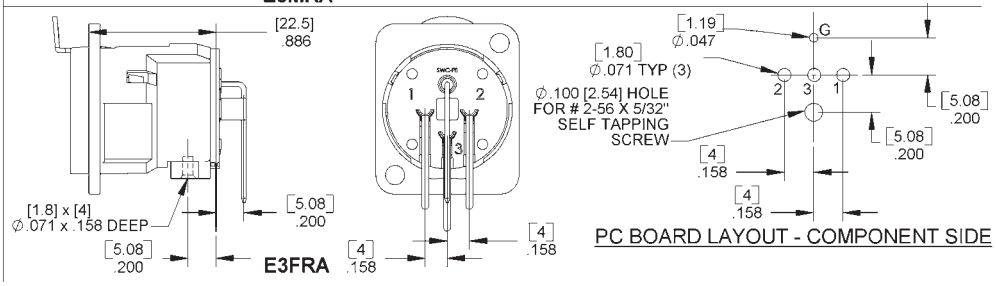

E3FRA

PC BOARD LAYOUT - COMPONENT SIDE

DIMENSIONS ARE FOR REFERENCE ONLY Inch (mm)

* Please visit the product pages on our website for the most up-to-date product information

E SERIES (continued)

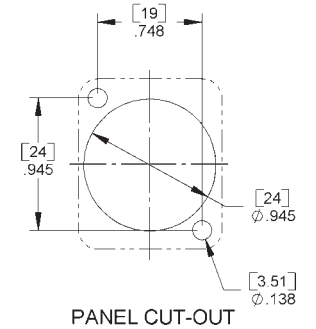

PANEL CUT-OUT
FRONT OR REAR MOUNT

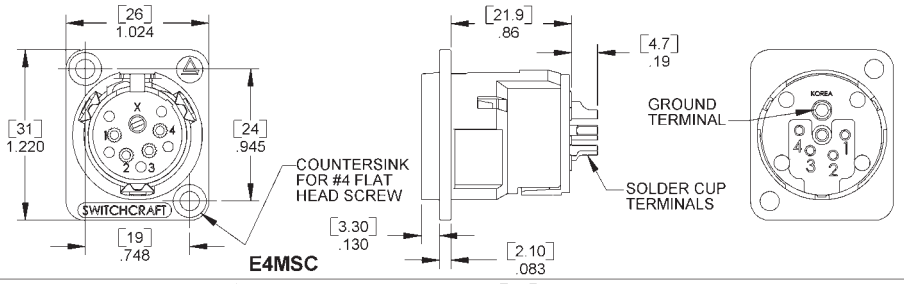

E4MSC

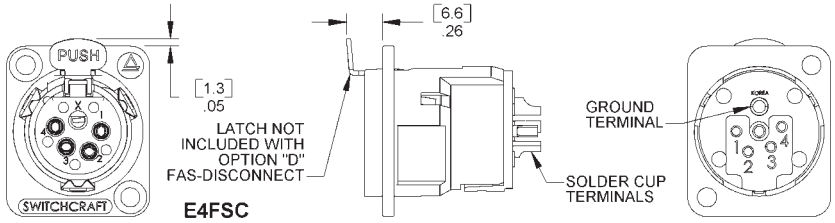

E4FSC

MALE CONNECTOR
GROUND TO PIN #1
OPTION "G1"

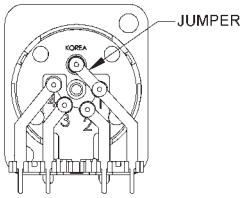

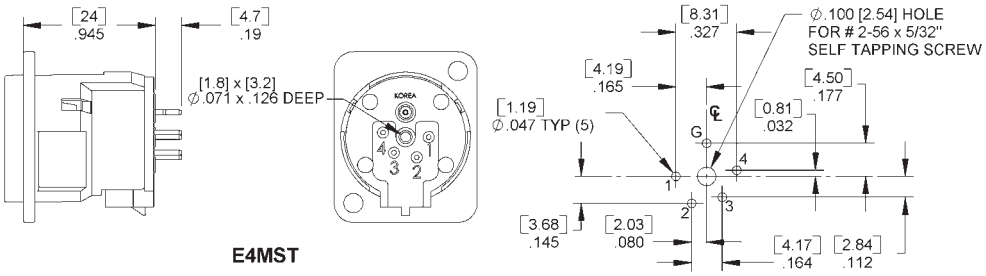

E4MST

FEMALE CONNECTOR
GROUND TO PIN #1
OPTION "G1"

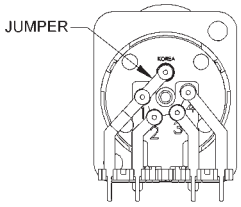

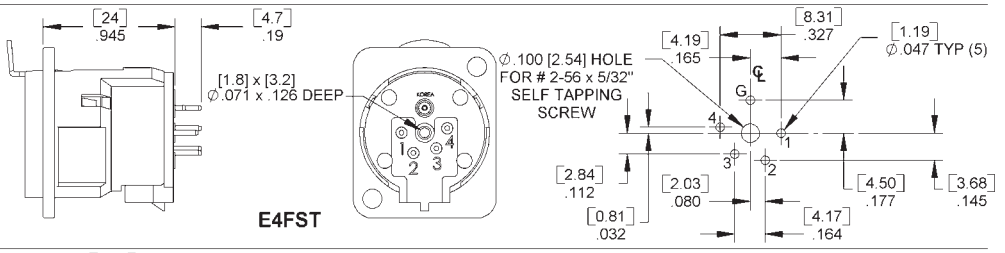

E4FST

REAR MOUNT OPTIONS

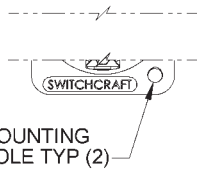

MOUNTING
HOLE TYP (2)

OPTION "M3"
M3 x 0.5 THREADED HOLES

OPTION "440"
#4-40 THREADED HOLES

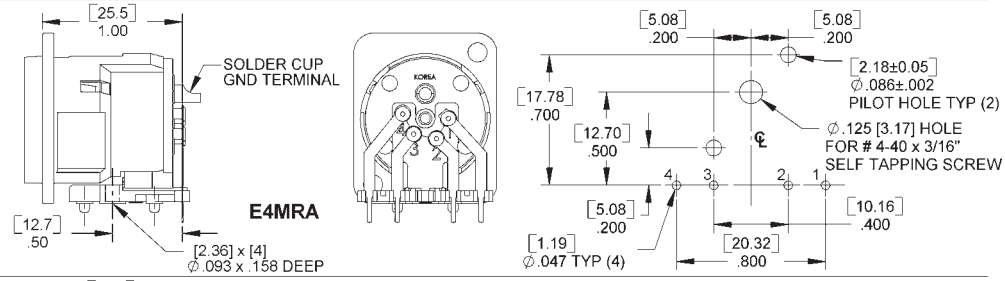

E4MRA

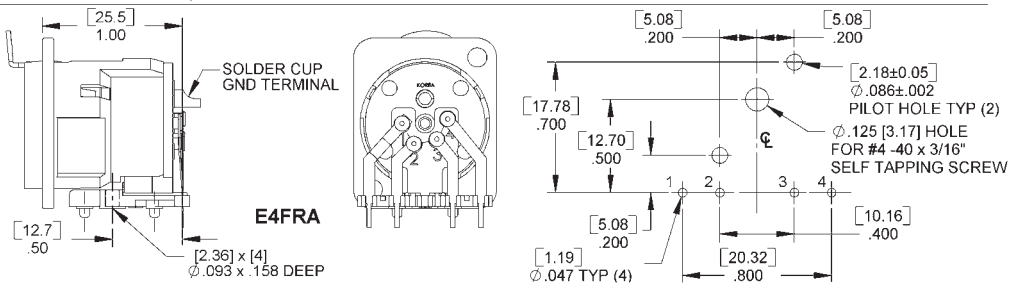

E4FRA

DIMENSIONS ARE FOR REFERENCE ONLY Inch (mm)

® Registered trademark of Switchcraft, Inc.
Note: Contact your Switchcraft Representative for price and delivery

* Please visit the product pages on our website for the most up-to-date product information

E SERIES (continued)

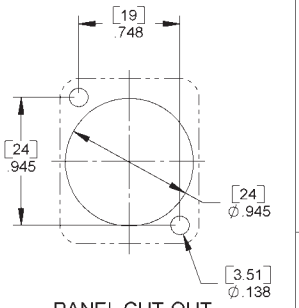

PANEL CUT-OUT
FRONT OR REAR MOUNT

MALE CONNECTOR
GROUND TO PIN # 1
OPTION "G1"

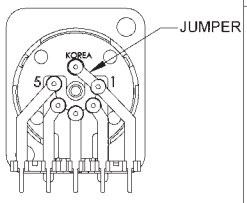

FEMALE CONNECTOR
GROUND TO PIN #1
OPTION "G1"

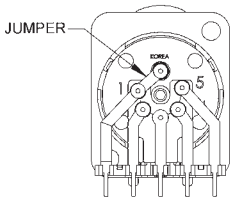

REAR MOUNT OPTIONS

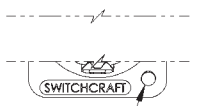

MOUNTING
HOLE TYP (2)

OPTION "M3"
M3 x 0.5 THREADED HOLES

OPTION "440"
#4-40 THREADED HOLES

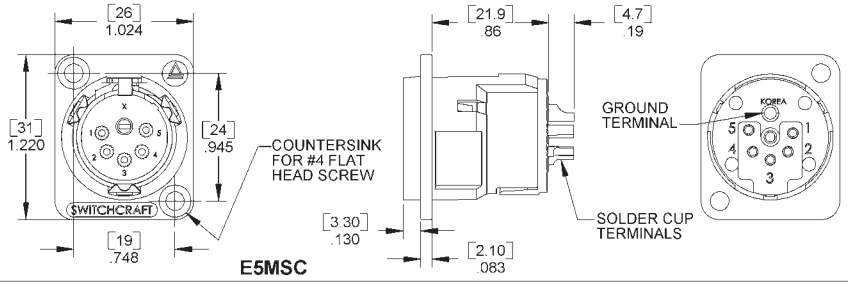

E5MSC

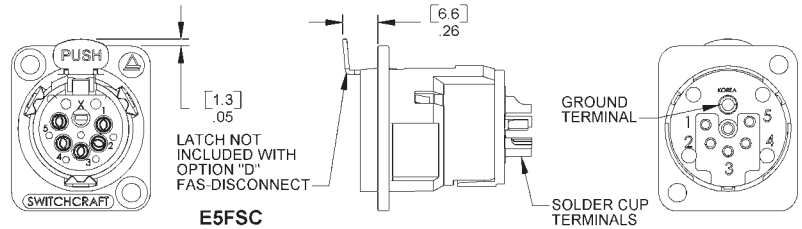

E5FSC

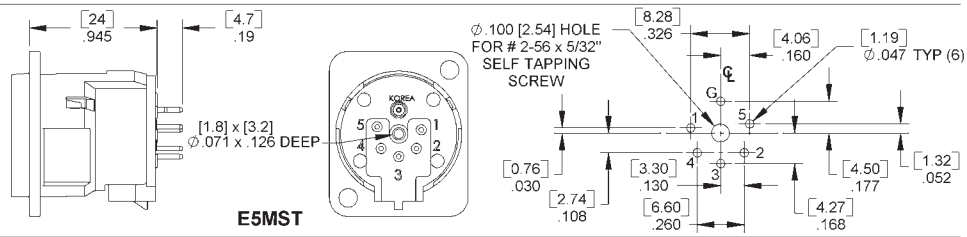

E5MST

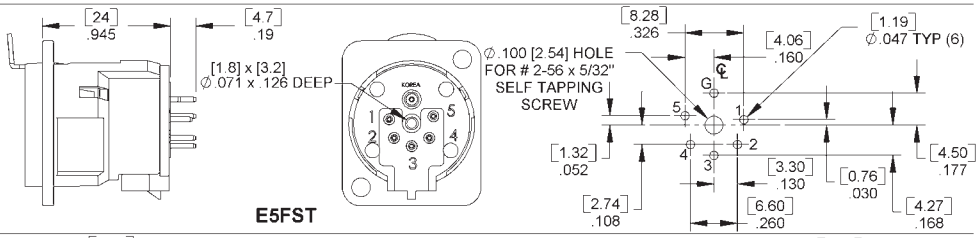

E5FST

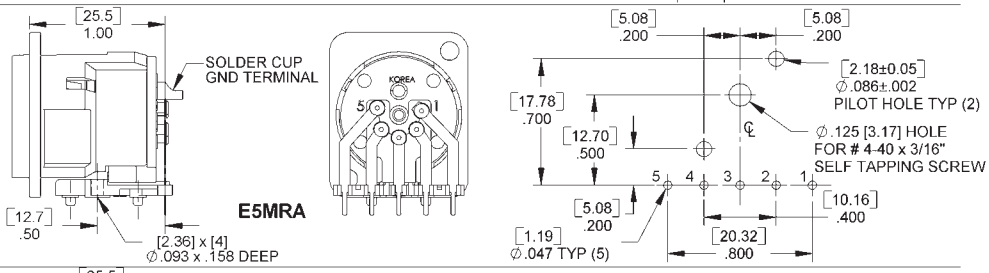

E5MRA

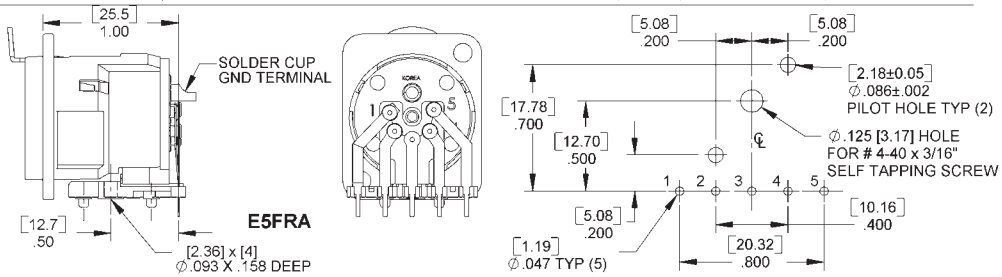

E5FRA

DIMENSIONS ARE FOR REFERENCE ONLY Inch (mm)

* Please visit the product pages on our website for the most up-to-date product information

EH SERIES RECEPTACLES

The EH Series consist of different styles of popular connectors in our E Series housing. This allows the end user to punch one single hole size and populate wall plates, gang assemblies with different types of connectors. Connector styles include BNC feed-throughs, RCA feed-throughs, USB feed-throughs, IEEE 1394 Firewire feed-throughs, BNC to solder cup, and RCA to BNC.



EHBNC2

EHRCA2

FEATURES

- Utilizes same panel cut-out as E Series QG connectors
- Rugged metal shells
- Available with a wide variety of popular feed-through connectors

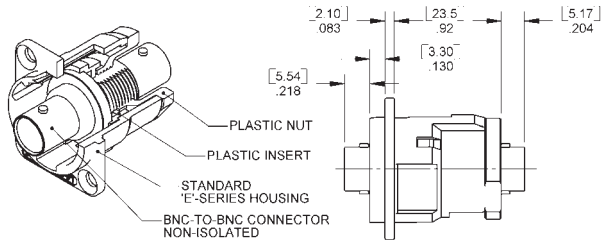

EHBNC2

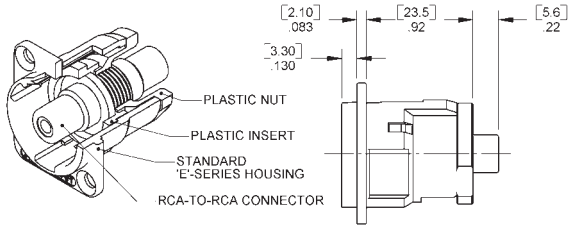

EHRCA2

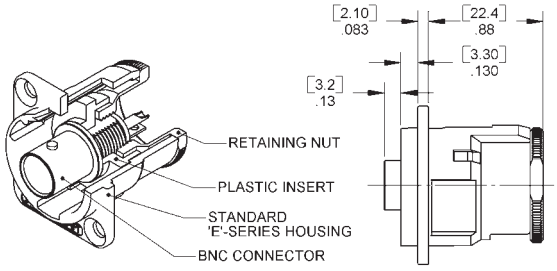

EHBNCSC

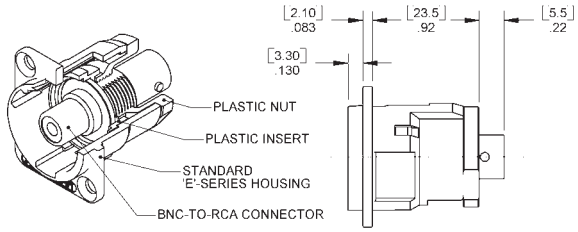

EHRCABNC

Part Number	Description
EHBNC2	BNC to BNC
EHBNCSC	BNC to solder cup
EHRCA2	RCA to RCA
EHRCABNC	RCA to BNC
EHUSB2	USB to USB
EH13942	IEEE1394 to IEEE1394
EHCAT62	Cat6 to Cat6

DIMENSIONS ARE FOR REFERENCE ONLY Inch (mm)

® Registered trademark of Switchcraft, Inc.
Note: Contact your Switchcraft Representative for price and delivery

* Please visit the product pages on our website for the most up-to-date product information

PQG® RECEPTACLES



PQG3FRA112



PQG3MRA112



PQG3FST112



PQG3MST112

Q-G® 3 pin/contact PC receptacles offer economy, reliability and performance in amplifiers, audio mixing boards, and other outboard gear. Choose receptacles with just the right combination of standard and optional bonus features to tailor the PQG series to your exact needs.

STANDARD FEATURES

- UL 94V-0 plastic materials.
- Circuit #1 "makes" first and "breaks" last during connect/disconnect.
- Positive mechanical polarization.
- Minimum PC board space required.
- Integral PC board locating posts.
- Mating/unmating cycles in excess of 10,000.
- Mates with Switchcraft Q-G and other compatible connectors.

OPTIONAL FEATURES

- Positive latch lock or FasDisconnect (female only).
- Shell-to-ground terminal.
- Mounting Plates:
  - **A. Backup Mounting Plate** with two, M3 x 0.5 threaded holes for faster, more rugged mounting to equipment panel/chassis.
  - **B. "Tri-Mounting" Plate**...plus two bifurcated pcb retainers with snap-in terminals which perform three valuable functions:
    1. Provide ground connection from panel to PCB.
    2. Hold connector securely to PCB during wave-soldering.
    3. Add strength between panel/chassis and PCB during soldering by "wicking" solder through the PCB and up sides of retainers to assure continuity.
  - **C.** Two panel grounds are integral with mounting plate.

SPECIFICATIONS

Housing: Black, glass-filled thermoplastic, UL 94V-0. Flange mounting holes are .128 inch diameter
Socket Contacts: Copper alloy, electrotinned.
Pin Contacts: Copper alloy, electrotinned.
Latch Release: Steel, nickel-plated.
Mounting Plate: Copper alloy.
Shell-to-Ground Terminals: Copper alloy, electrotinned.
Latches: Copper alloy, nickel-plated.
Insertion/Withdrawal Forces: 2 pound (nominal).
Contact Resistance: .05 ohms per pole (maximum).
Dielectric Withstanding Voltage: 1,000 V rms for 1 minute.
Insulation Resistance: 10^4 MΩ @ 500 V DC.
Current Capacity: 10A maximum (carry only).
Operating Temperature: -30°F to 185°F (-34°C to 85°C).
Mechanical Life: 10,000 cycles @ 10 cpm.

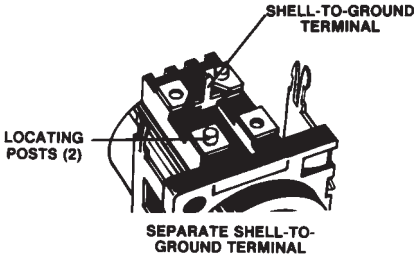

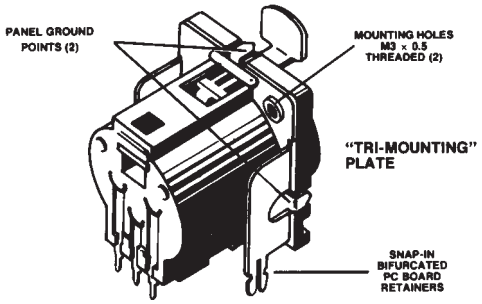



DIMENSIONS ARE FOR REFERENCE ONLY Inch (mm)

* Please visit the product pages on our website for the most up-to-date product information

PQG® SERIES PART NUMBERING SYSTEM

P Q G	3					
SERIES PQG-	**PINS/ CONTACTS**	**GENDER**	**PC TERMINALS**	**LATCHING**	**GROUND TERMINAL**	**MOUNTING PLATE**
Composite QG	3	**F -** Female **M -** Male	**RA** - Right Angle, Bottom Exit **ST** - Straight Rear Exit	**0** - None **1** - Latch Lock **2** - Fas-Disconnect (female only)	**0** - None **1** - Installed	**0** - None **1** - Plate with two, M3 x 0.5 threaded holes **2** - Plate with two, M3 x 0.5 threaded holes, panel grounds and PCB retainers

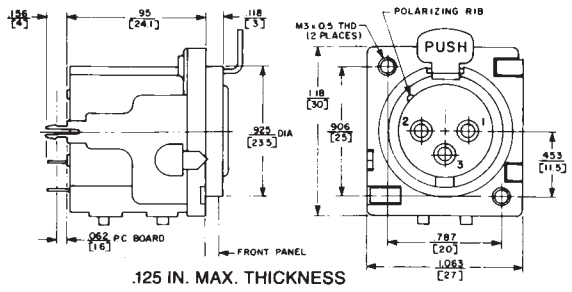

.125 IN. MAX. THICKNESS

No. PQG3FSTXXX

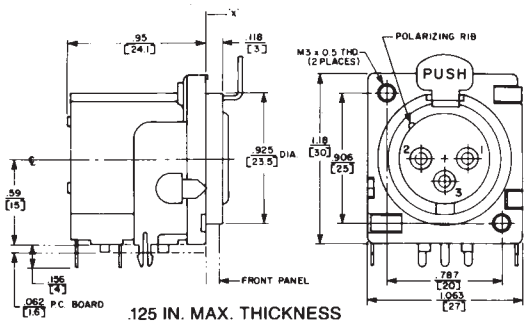

.125 IN. MAX. THICKNESS

No. PQG3FRAXXX

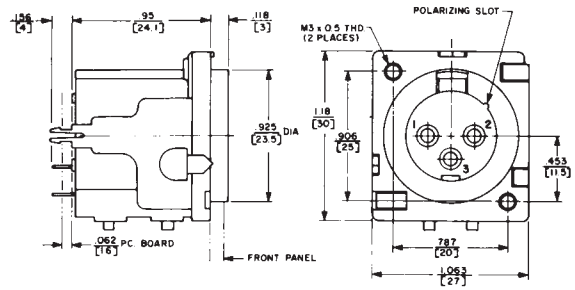

No. PQG3MSTXXX

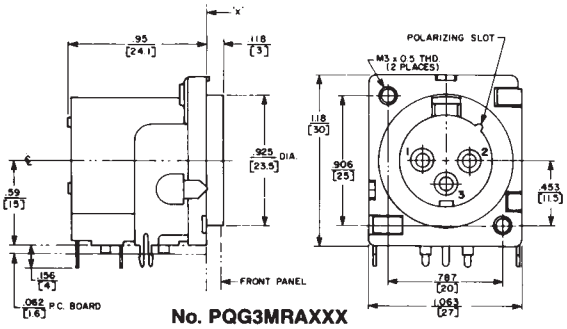

No. PQG3MRAXXX

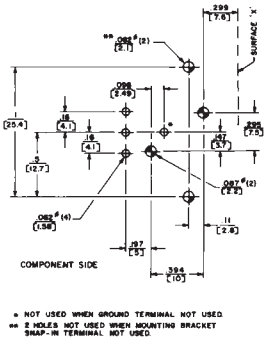

RECOMMENDED PC BOARD LAYOUT (RIGHT ANGLE)

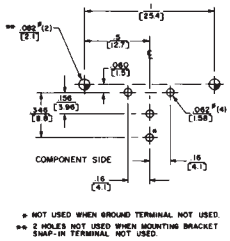

RECOMMENDED PC BOARD LAYOUT (STRAIGHT)

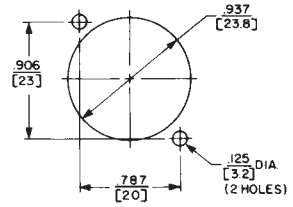

PANEL OPENING

DIMENSIONS ARE FOR REFERENCE ONLY Inch (mm)

® Registered trademark of Switchcraft, Inc.
Note: Contact your Switchcraft Representative for price and delivery

* Please visit the product pages on our website for the most up-to-date product information

Q-G® AUDIO RECEPTACLES FOR PC/PANEL MOUNT

See Next Page for New Solder Cup Option

PD SERIES - PLASTIC PANEL MOUNT

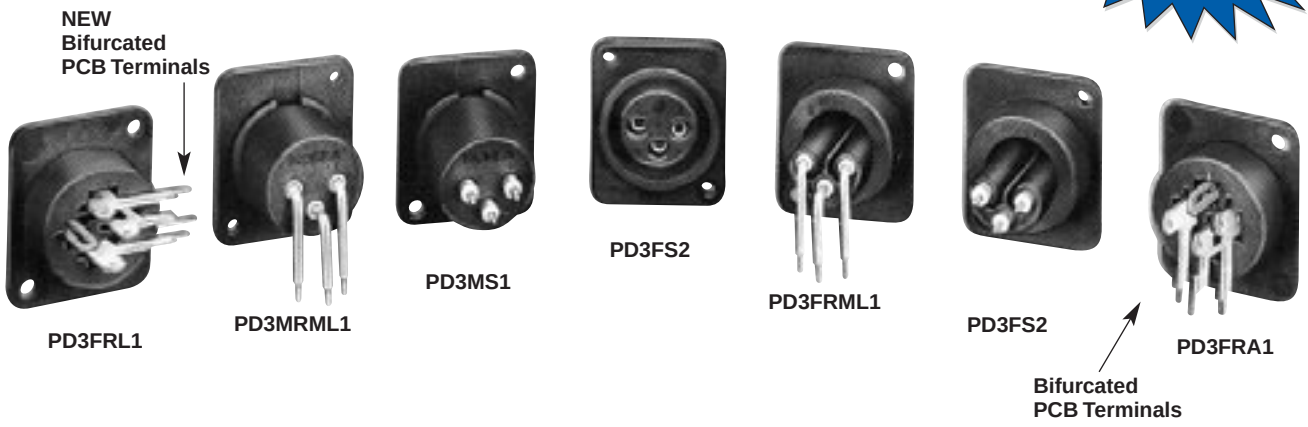

Switchcraft offers the PD Series (plastic panel mount) audio connectors with a wide variety of 3-pin/contact, male and female types and many terminals for combined PC/panel mount. Female types offer larger contact area for higher ratings and longer life. Panel mounting may be at users option, either front or rear. New PD series connectors mate with Switchcraft Q-G and other compatible types.

PD SERIES FEATURES

- 3 pins/contacts
- Male and female
- Straight and right-angle terminals
- PC or PC/panel mount
- Front or rear panel mount
- Special PC/solder terminal type with exits at 0° (down, 90° (right), 180° (top), and 270° (left)
- Rugged molded black glass-filled thermoplastic housings.

SPECIFICATIONS

Housing: Black molded thermoplastic, glass-filled.
Ground Pin: Copper alloy.
Stamped Terminals/Contacts: Copper alloy, electrotinned.
Screw Machine Terminals/Pins: Copper alloy, silver-plated.

BIFURCATED PC TERMINALS

Bifurcation configuration for PC terminals on selected connectors offers these advantages.

1. Provides convenient snap-in retention for mounting.
2. Holds connector securely to PCB during wavesoldering.
3. Adds strength to all terminal connections by solder "wicking" through PCB and up sides of terminals.

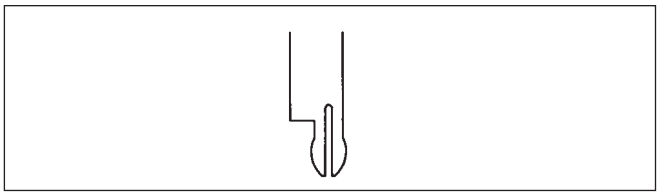

BIFURCATED HOLD-DOWN FEATURE FOR ALL PC TERMINALS

DIMENSIONS ARE FOR REFERENCE ONLY Inch (mm)

* Please visit the product pages on our website for the most up-to-date product information

PD SERIES PART NUMBERING SYSTEM

P D	3				
SERIES PD	PINS/ CONTACTS	GENDER	GENDER	HOUSING	TERMINALS

GENDER
F - Female
M - Male

FEMALE
RA - Right-angle, Bottom Exit
RL - Right-angle, Left exit
RR - Right-angle, Right Exit
RU - Right-angle, Top Exit
RML - Right-angle, Bottom Exit, Long Screw Mach. Term.
RMS - Right-angle, Bottom Exit, Short Screw Mach. Term.
S - Straight, Rear Exit
SC - Solder Cup

MALE
RML - Right-angle, Bottom Exit, Long Screw Mach. Term.
RMS - Right-angle, Bottom Exit, Short Screw Mach. Term.
S - Straight, Rear Exit
SC - Solder Cup

HOUSING
1 - Front Mount .11" (2.8 mm) diameter flange mounting holes
2 - Rear Mount .091" (2.3 mm) diameter flange mounting holes
3 - Front Mount .126" (3.2 mm) diameter flange mounting holes

TERMINALS
Blank= Silver terminals
AU= Gold terminals

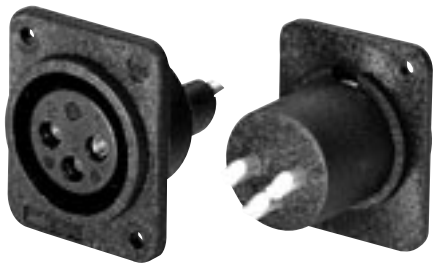

Note: New solder cup option shown.



PD3MS1
3-pin male, straight (rear exit) PC terminals. Front mount.



PD3MRML2
3-pin male, right angle (bottom exit) long screw machine terminals. Panel mount holes not countersunk.

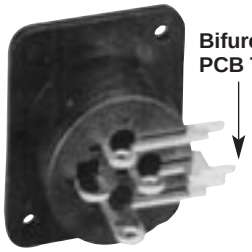

PD3FRL1
3-contact female, right-angle (left exit) PC/solder terminals. Ground lug. Front panel mount.



PD3FRA1
3-contact female, right-angle (bottom exit) PC/solder terminals. Ground lug. Front panel mount.

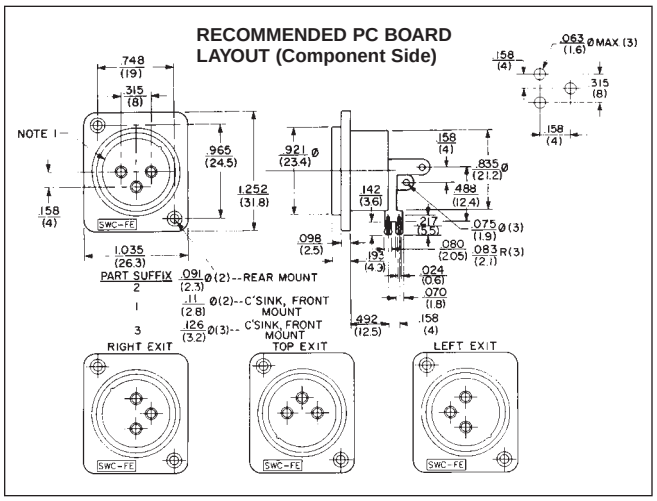

Numbers PD3FRA1, 2, and 3; PD3FRL1, 2, and 3; PD3FRR1, 2 and 3; PD3FRU1, 2 and 3 (Typical)

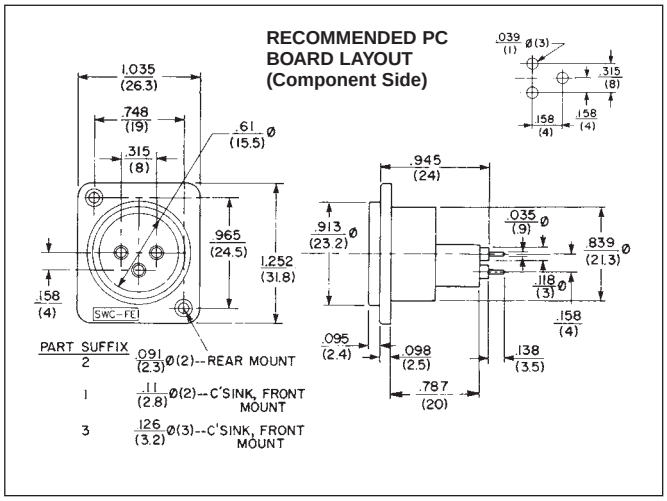

Numbers PD3FS1, 2, and 3 (Typical)

DIMENSIONS ARE FOR REFERENCE ONLY Inch (mm)

® Registered trademark of Switchcraft, Inc.
Note: Contact your Switchcraft Representative for price and delivery

* Please visit the product pages on our website for the most up-to-date product information

PD SERIES (continued)

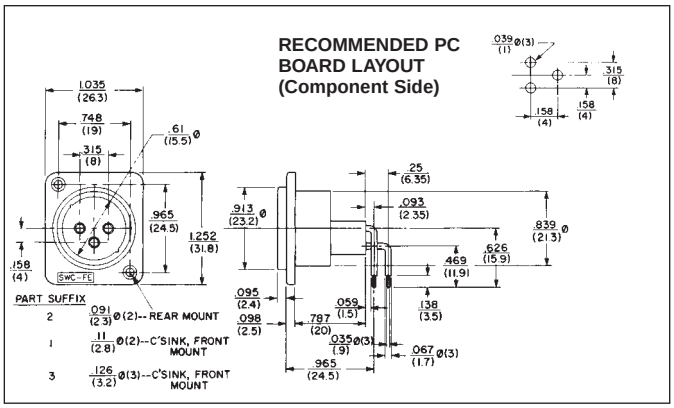

Numbers PD3FRMS1, 2, and 3 (Typical)

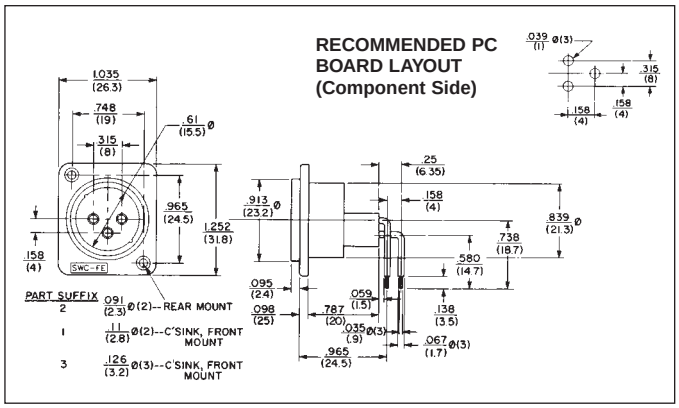

Numbers PD3FRML1, 2, and 3 (Typical)

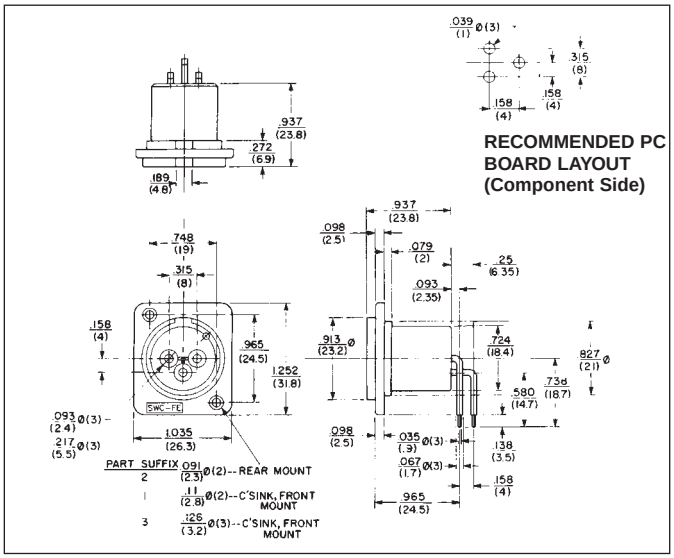

Numbers PD3MRML1, 2, and 3 (Typical)

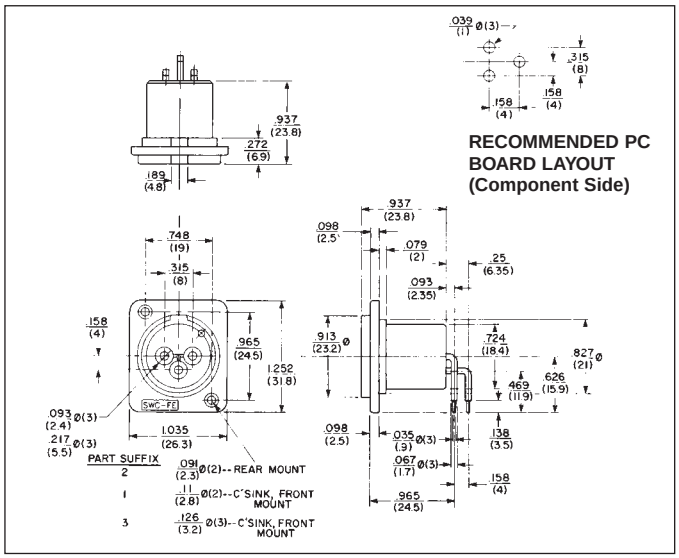

Numbers PD3MRMS1, 2, and 3 (Typical)

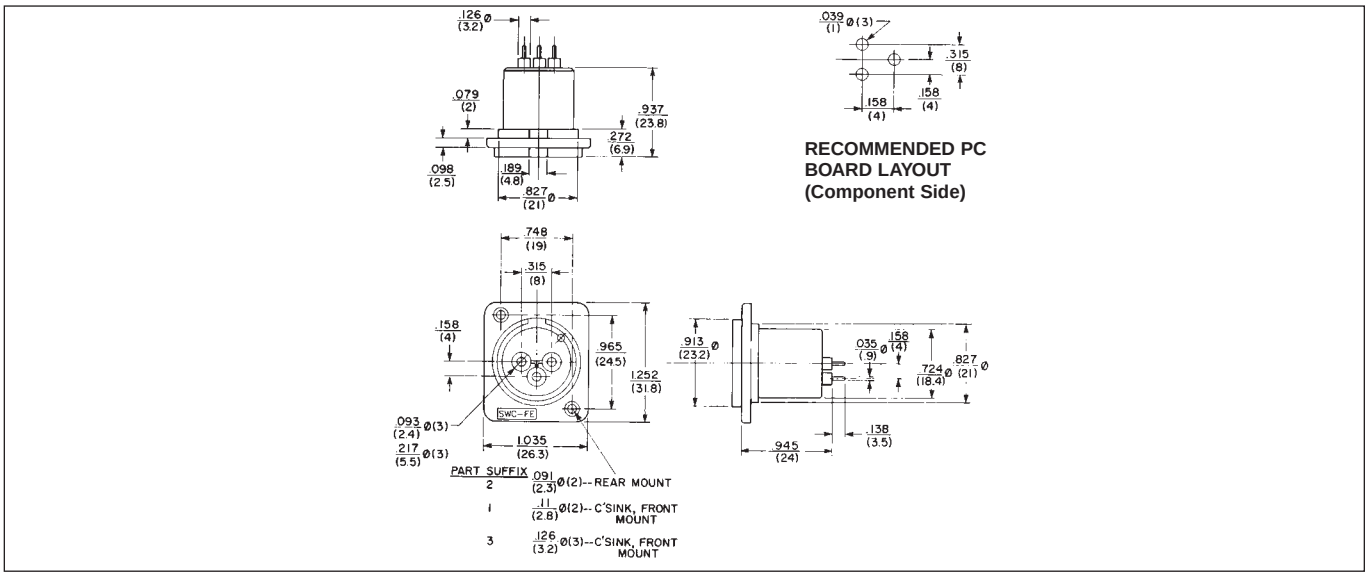

Numbers PD3MS1, 2, and 3 (Typical)

DIMENSIONS ARE FOR REFERENCE ONLY Inch (mm)

* Please visit the product pages on our website for the most up-to-date product information

Q-G ® RECEPTACLES

SERIES Y(*)F, Y(3)FPC, Y(*)FD, Y(3)FDPC AND Y(3)MPC RECEPTACLES



Y3MPC



Y3FPC

Series Y(*)MPC. Male receptacle for panel or chassis mounting escutcheon. PC terminals and standoffs. Rear of panel mount in .750 inch diameter hole. Maximum panel thickness: 25 inches (6.35 mm); .156 inches (3.96 mm) if YEM escutcheon is used.

Series Y(*)FPC. Female receptacle for panel or chassis mounting. PC Terminal and standoffs. Rear of panel mount in .875 inch (22.22 mm) diameter hole.

Series Y(*)F. Female receptacle for panel or chassis mounting. Rear of panel mount in .875 inch (22.22 mm) diameter hole.

Series Y(*)FD, Y(*)FDPC. Female receptacles. Same as Y(*)F and Y(*)FPC, respectively, except with FAS-DISCONNECT detent.

Series YEF Escutcheons. Trim escutcheons provide distinctive panel appearance and can also color code connections. Available in black (standard), red, green, white, and yellow. Other colors possible on special order where production quantities warrant.

ASSEMBLY/MOUNTING

All receptacles are rear-of-panel mount (units with PC terminals also mount/terminate to PC board). Flange fastens to chassis/panel with two #4-40 machine screws (not supplied). Use of escutcheons is optional.

Install latch release lever (Series Y(*)F and Y(*)FPC) after receptacle is fastened to chassis/panel. Insert lever in slot from front and press inward until it locks (snaps) into place. To remove lever, depress rear of lever (with screwdriver) through opening at top rear of housing and pull lever straight out.

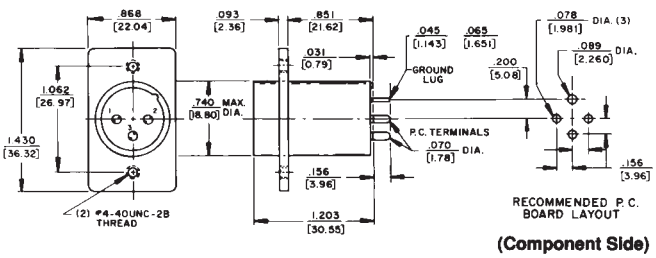

RECEPTACLES

Part Numbers		Insert Contacts	Part Number Male†	Insert Pins
Female Latchlock†	Female Detent†			
Y3F	Y3FD	3	Y3MPC	3

†Suffix letters "PC" indicate PC terminals; all others have solder lugs.

ESCUTCHEONS

Part Number	Color	Part Number	Color
◊YEF01	Red	YEF04	Blue
YEF02	Black	◊YEF05	White
◊YEF03	Green	◊YEF08	Yellow

SPECIFYING NOTE: YEM02 escutcheon can be ordered on special order; contact Switchcraft.

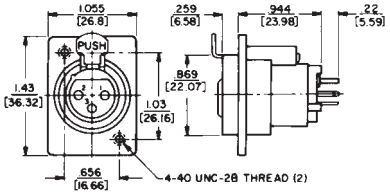

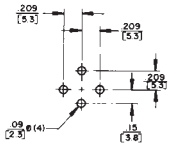



YEF02 ESCUTCHEONS

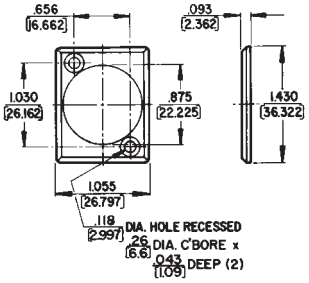

DIMENSIONS ARE FOR REFERENCE ONLY Inch (mm)

® Registered trademark of Switchcraft, Inc.
Note: Contact your Switchcraft Representative for price and delivery

* Please visit the product pages on our website for the most up-to-date product information

F SERIES RECEPTACLES

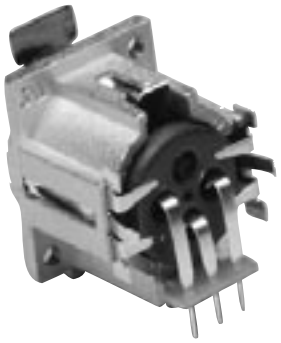

F3FRAF



F3MSTF



F3FSTF

Switchcraft now offers the F Series. Available in male and female, the receptacles can be mounted from the rear of the panel. Features include an all metal housing with a ferrite disk for added EMI/RMI shielding. Both male and female connectors can be mounted vertical or horizontal to the PC board. All connectors have a PC-board retention feature to hold the connectors firmly to the PC board prior to soldering. See the chart below for part numbers.

F SERIES FEATURES

- Replaces Cannon XLM-Series
- 3-pin contact; male and female types
- Both male and female fit in same panel cutout
- Locking receptacles
- Silver-plated contacts
- Rugged metal shells; satin nickel finishes
- Through-the-shell ground connection and all-metal shells for greater shielding effectiveness
- Compatible with Switchcraft Q-G®, QGP and other connectors with similar configurations
- Added EMI/RFI ferrite shield

Part Number	Terminals	Contacts	Housing	Type
F3MSTF	Straight	Silver	Satin Nickel	M
F3FSTF				F
F3MRAF	Right Angle			M
F3FRAF				F

SPECIFICATIONS:

ELECTRICAL

Contact Resistance: 50 milliohms maximum, per pole.
Current Rating: 15A
Insulation Resistance: 1,000 MΩ
Dielectric Resistance: 1,000 V rms
Capacitance: 2 to 4 pF

MECHANICAL

Insertion/Withdrawal Forces: 7 pounds maximum/nominal
Insertion: 7 pounds maximum withdrawal.
Life: 10,000 operations (minimum).

ENVIRONMENTAL

Thermal Range: -55° C to +85° C
Thermal Shock: Meets MIL-STD-202F, method 107D
Salt Spray: Meets MIL-STD-202F, method 101D (for 16 hrs.)

MATERIAL

Shells: Die-cast; satin-nickel plated
Inserts: Glass-filled thermoplastic.
Socket Contacts: Copper alloy, silver-plated.
Pin Contacts: Copper alloy, silver-plated.
Latch Release: Steel, nickel-plated.

TERMINALS

Two terminations are available on F-Series receptacles:
1. Straight PC-terminals – direct termination to PC-board. Housing mounts to panel.
2. Right Angle PC terminals – direct termination to PC-board at right angle. Housing mounts to panel.

DIMENSIONS ARE FOR REFERENCE ONLY Inch (mm)

* Please visit the product pages on our website for the most up-to-date product information

F SERIES RECEPTACLES (continued)

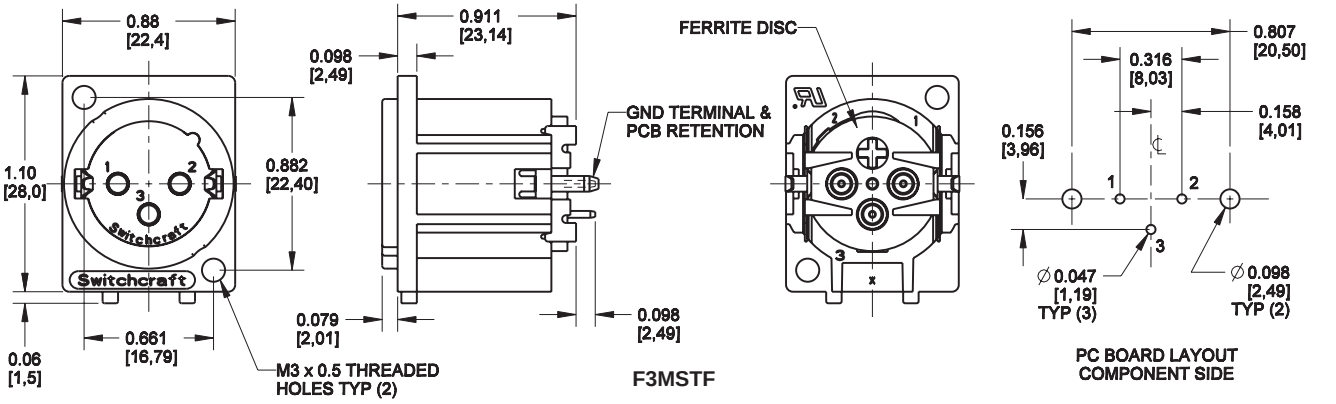

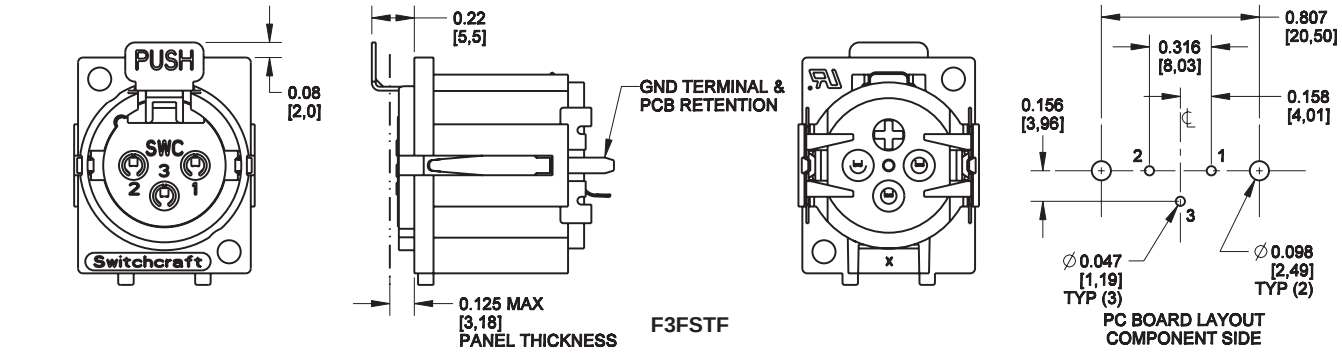

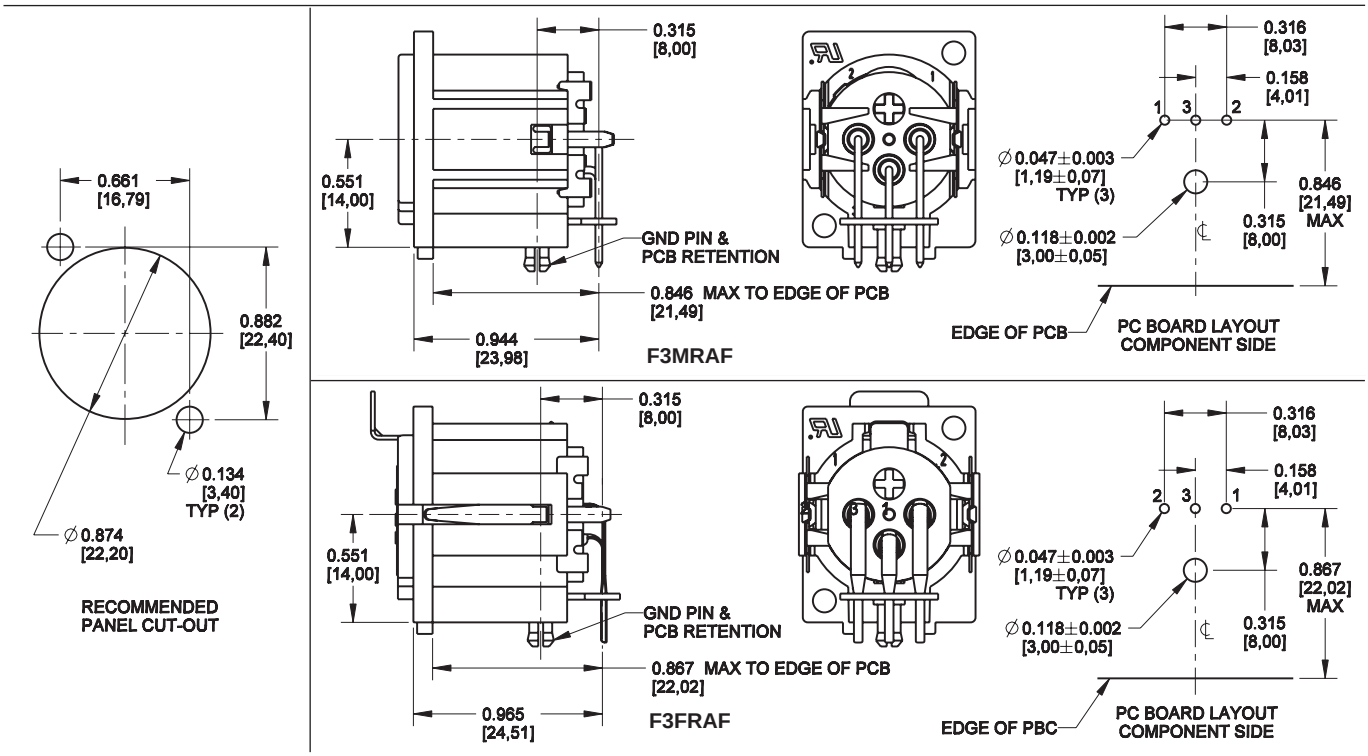

DIMENSIONS ARE FOR REFERENCE ONLY Inch (mm)

® Registered trademark of Switchcraft, Inc.
Note: Contact your Switchcraft Representative for price and delivery

* Please visit the product pages on our website for the most up-to-date product information

Q-G® ADAPTERS, ACCESSORIES

Q-G® CONNECTOR INSERTS



Male and female Q-G ® inserts with 3-7 pins/contacts, fit appropriate plug and receptacle housings. Female inserts available with standard latchlock or FAS-DISCONNECT detent mating, and with solder or PC terminals. Intended for replacement, or building into equipment such as microphones and transducers.

Standard Latchlock	FAS-* DISCONNECT	Male Inserts	Insert Pins/ Contacts
—	◊ QG3FDPC	—	3
QG3F	QG3FD	QG3M	3
QG4F	QG4FD	QG4M	4
QG5F	QG5FD	QG5M	5
QG6F	QG6FD	QG6M	6
QG7F	QG7FD	QG7M	7

*Suffix letters "PC" indicate PC terminals; all others (except "S") have solder lugs.
**Suffix letter "S" indicates locking PC terminal and plastic housing.
◊ Special order only. Contact Switchcraft.

Note: Add suffix "BAU" for black insert with gold-plated contacts.

W(*)M RECEPTACLE



Right-angle male panel receptacle.
Mounts with two, #5-40 machine screws.

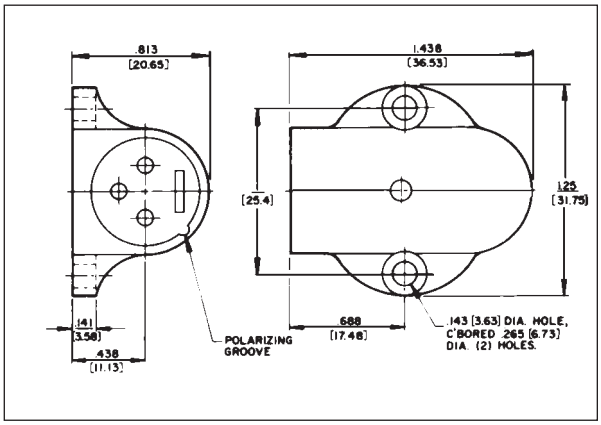

Part Number	Insert Pins
W3M	3
W4M	4

SHORTING PLUG



3-pin plug shorts out unused hi-Z microphone inputs or other sensitive circuits (shorting jumper installed between pins 2 and 3). 6" (152.4 mm) chain fastened to end pin to prevent plug loss. Switchcraft can install special wiring for a nominal extra charge.

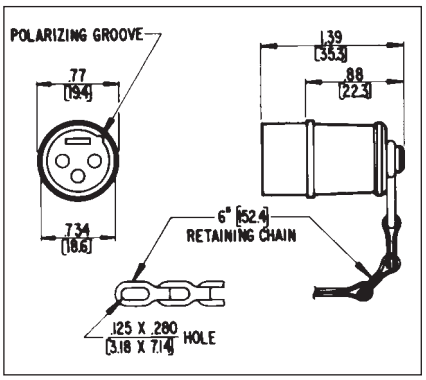

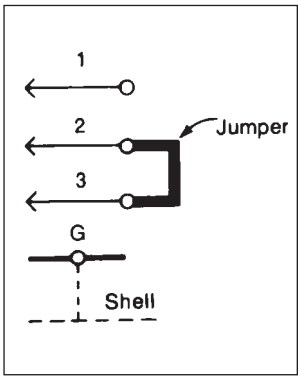

Part Number	Insert Pins
◊N3MS	3

◊ Available on special order only; contact Switchcraft for price and delivery.

DIMENSIONS ARE FOR REFERENCE ONLY Inch (mm)

* Please visit the product pages on our website for the most up-to-date product information

Q-G® WALL PLATE RECEPTACLES

G(*)M WALL PLATE RECEPTACLE



Wall plate with one B3M or B4M male receptacle mounted (in "D"-shaped hole to prevent turning) on standard single electrical outlet box. Cover mounting screws included.

Part Number	Finish	Insert Pins
G3MS	Stainless Steel	3
◊G4MS		4

◊ Special order only. Contact Switchcraft.

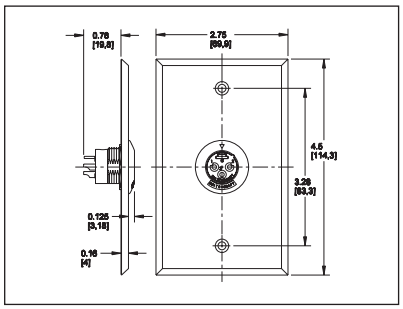

J(*)F WALL PLATE RECEPTACLE



Wall plate with one, D3F or D4F female receptacle. Mounts on standard single electrical outlet box. Cover mounting screws included.

Part Number	Finish	Insert Pins
J3FS	Stainless Steel	3
◊J4MS		4

◊ Special order only. Contact Switchcraft.

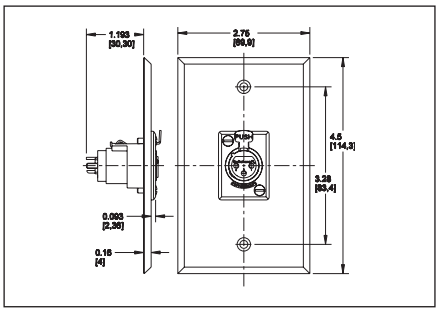

H(*)M WALL PLATE RECEPTACLE



Wall plate with two, B3M or B4M male receptacles mounted (in "D"-shaped holes to prevent turning) on standard single electrical outlet box. Cover mounting screws included.

Part Number	Finish	Insert Pins
◊H3MS	Stainless Steel	3
◊H4MS		4

◊ Special order only. Contact Switchcraft.

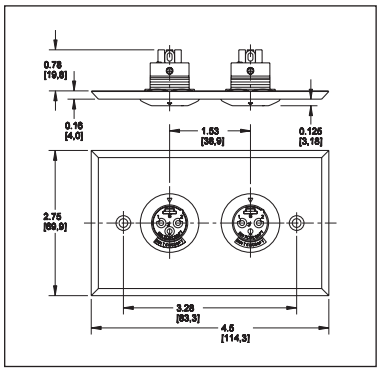

K(*)F WALL PLATE RECEPTACLE



Wall plate with two, D3F or D4F female receptacles. Mounts on standard single electrical outlet box. Cover mounting screws included.

Part Number	Finish	Insert Pins
K3FS	Stainless Steel	3
◊K4FS		4

◊ Special order only. Contact Switchcraft.

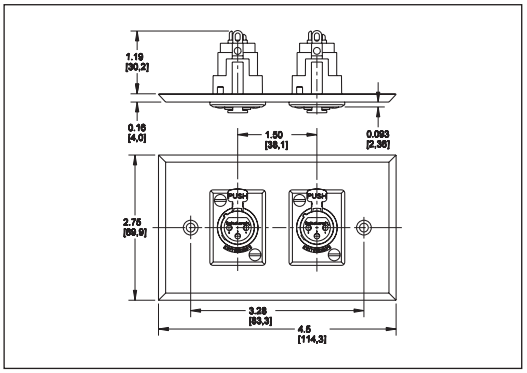

DIMENSIONS ARE FOR REFERENCE ONLY Inch (mm)

® Registered trademark of Switchcraft, Inc.
Note: Contact your Switchcraft Representative for price and delivery

* Please visit the product pages on our website for the most up-to-date product information

Q-G® CONNECTOR-ADAPTERS



321 322 323 324 383A 384A

Switchcraft Q-G® Connector-Adapters, designed to solve common interconnection problems, are ideally suited to the interconnection of microphones, mixers, amplifiers, public address and sound reinforcement equipment, broadcast equipment, and any other component that does not have an appropriate mating connector. All are completely shielded, and incorporate the high quality and outstanding design features of the Switchcraft line of Q-G Audio Connectors, including:

1. Separate ground terminal.
2. Ground Contactors.
3. Captive Design® Insert Screw
4. High impact Thermoplastic Insulation.

MATERIAL SPECIFICATIONS

PHONE JACK AND PLUG TERMINATIONS

Shell: Copper alloy, nickel-plated.
Insulation: Paper-base phenolic.
Plug Tip and Sleeve: Copper alloy, nickel-plated.
Phone Pin and Plug Housing: Copper alloy, nickel-plated.
Phono Plug Insulation: Rigid plastic.
Phono Jack Housing: Steel, copper alloy-plated, tarnish-resistant.
Phono Jack Pin Receptacle: Brass, silver-plated, copper alloy.
Phono Jack Insulation: Thermoplastic.

321. Phono plug to 3-contact female audio-connector (Switchcraft® A3F).

322. Phono jack to 3-contact female audio-connector (Switchcraft® A3F).

323. Phono plug to 3-pin male audio-connector (Switchcraft A3M).

324. Phono jack to 3-pin male audio-connector (Switchcraft® A3M).

383A. Three-contact female audio-connector (Switchcraft® A3F) to standard .250" (6.35 mm) diameter 3-conductor extension phone jack.

384A. Three-pin male audio connector (Switchcraft® A3M) to standard .250" (6.35 mm) diameter 3-conductor extension phone jack.

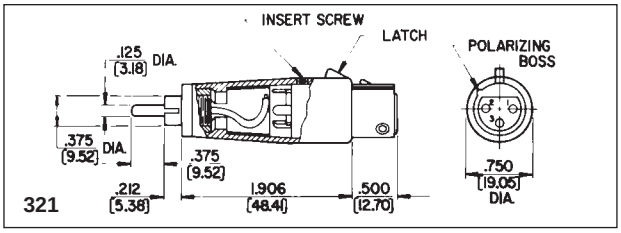

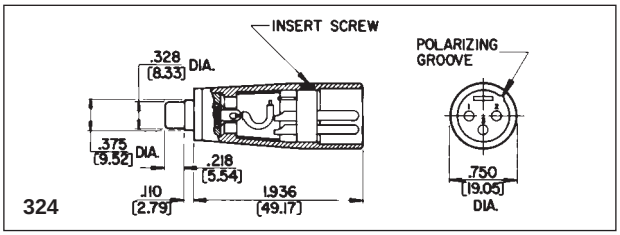

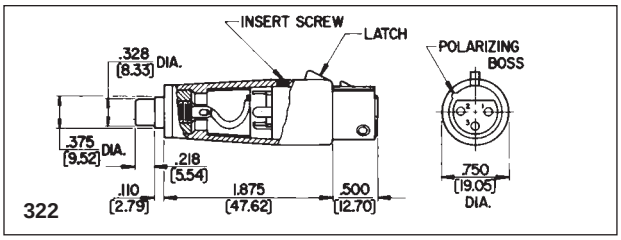

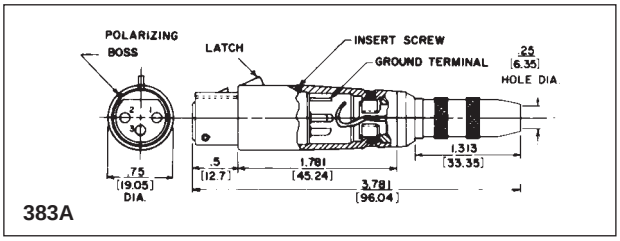

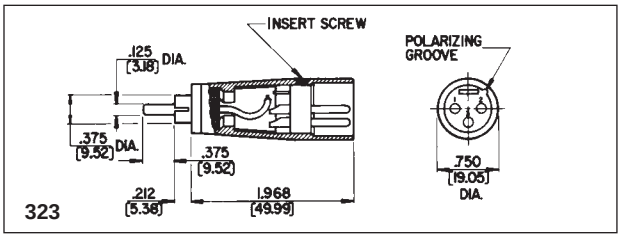

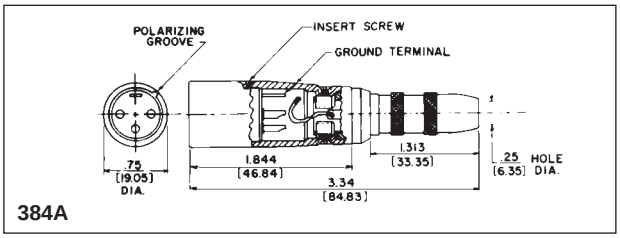

DIMENSIONS ARE FOR REFERENCE ONLY Inch (mm)

* Please visit the product pages on our website for the most up-to-date product information

Q-G® AUDIO CONNECTOR-ADAPTERS

386A: Three-contact female audio connector (Switchcraft® A3F) to standard .250" (6.35 mm) diameter 3-conductor phone plug.

387A: Three-pin male audio connector (Switchcraft® A3M) to standard .250" (6.35 mm) diameter 3-conductor phone plug.

389: Three-contact female audio connector (Switchcraft® A3F) at both ends. Pre-wired contacts: 1 to 1, 2 to 2, 3 to 3.

390: Three-pin male audio connector (Switchcraft® A3M) at both ends. Prewired pins: 1 to 1, 2 to 2, 3 to 3.

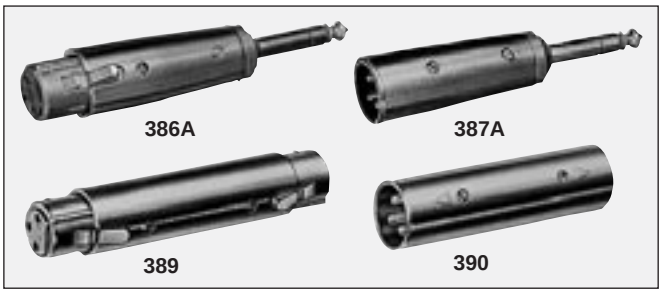

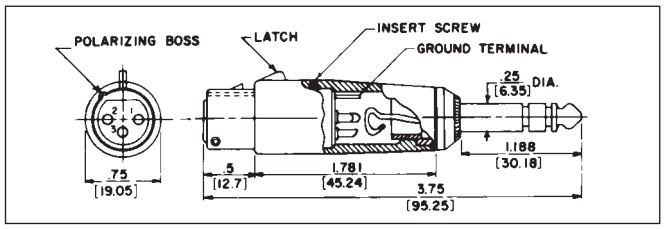

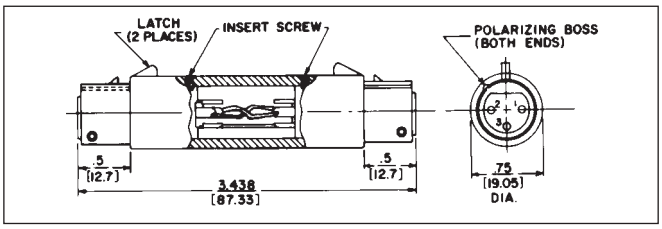

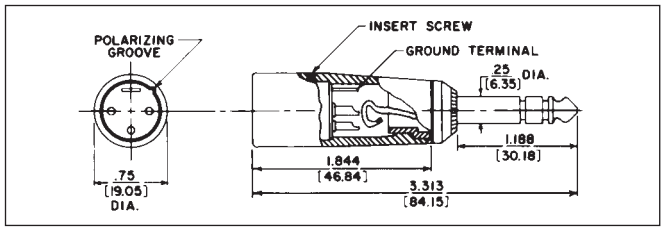

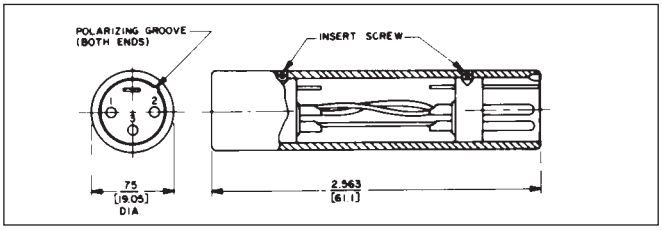

S*FM AUDIO CONNECTOR-ADAPTER



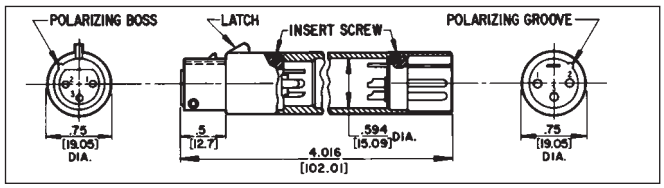

Male-female connector conversion has male Q-G® insert at one end and corresponding female Q-G® insert at the other. Designed to accept internally connected transformer, attenuator, or other circuitry inline with microphone input. Includes 1.50" (38.1 mm) long x .594" (15.08 mm) diameter of usable internal volume.

Part Number	Female Insert	Male Insert	Insert Pins/Contacts
S3FM	QG3F	QG3M	3
◊S4FM	QG4F	QG4M	4
◊S5FM	QG5F	QG5M	5

◊ Available on special order only; contact Switchcraft for price and delivery.

AUDIO "Y" ADAPTERS



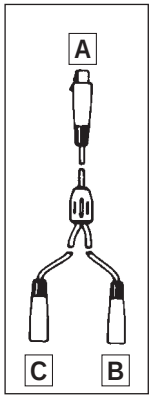

Series 391Q Y-Adapters can combine or split typical audio signals using a combination of Switchcraft Q-G® A3F and A3M cord plugs. Outputs of two microphones can conveniently be connected in parallel and connected to a single input using a 391Q23 Y-Adapter. Cabling is 2-conductor shielded, 2-foot long gray jacket with molded Y-junction at center point. Mates with Switchcraft Q-G® and QGP® connectors.

Part Number	Q-G® Cord Plug Part Numbers		
	Plug A	Plug B	Plug C
391Q13	A3F	A3M	A3M
◊391Q23	A3F	A3M	A3F
◊391Q33	A3F	A3F	A3F
391Q43	A3M	A3F	A3F
◊391Q53	A3M	A3F	A3M
◊391Q63	A3M	A3M	A3M

Note: "Y" adapters may use either series A(*) or AA(*) plugs.
◊ Available on special order only; contact Switchcraft for price and delivery.

DIMENSIONS ARE FOR REFERENCE ONLY Inch (mm)

® Registered trademark of Switchcraft, Inc.
Note: Contact your Switchcraft Representative for price and delivery

* Please visit the product pages on our website for the most up-to-date product information

DMX ADAPTER

Switchcraft introduces our new series of DMX adapters. The DMX adapters were developed for use in the theater lighting industry. The adapters allow the end user to use standard 3 pin XLR cable assemblies in connecting DMX equipment. The adapters are available in 3 pin male to 5 pin female and 5 pin male to 3 pin female. All are wired "straight through."



FEATURES AND BENEFITS

- Nickel-plated die-cast housing increases durability
- Pre-wired for immediate use
- Available in two configurations

APPLICATIONS

- Theater lighting
- Any DMX application

SPECIFICATIONS

Shell: Die-cast zinc, satin nickel finish
Insert Insulation: Molded thermoplastic
Socket contacts: Silver-plated copper alloy, tarnish-resistant
Pin contacts: Sliver-plated copper alloy, tarnish-resistant

ORDERING INFORMATION

S3F5M	3 pin female to 5 pin male
S5F3M	5 pin female to 3 pin male

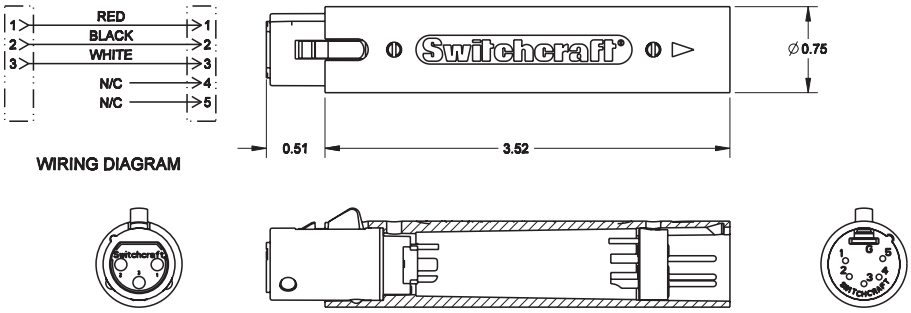

WIRING DIAGRAM

S3F5M
3 PIN FEMALE TO 5 PIN MALE
DMX ADAPTER

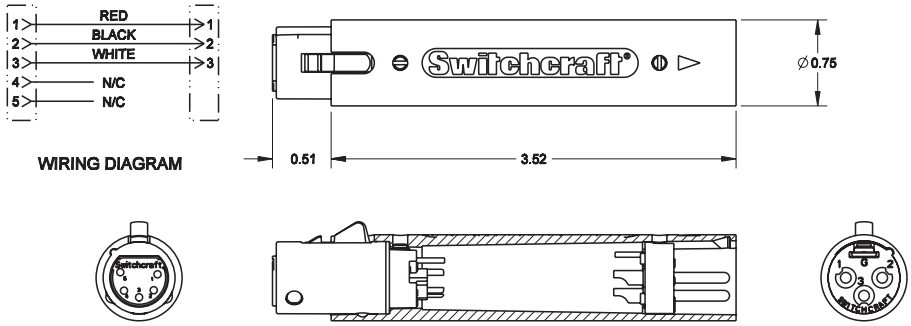

WIRING DIAGRAM

S5F3M
5 PIN FEMALE TO 3 PIN MALE
DMX ADAPTER

DIMENSIONS ARE FOR REFERENCE ONLY Inch (mm)

* Please visit the product pages on our website for the most up-to-date product information

Q-G® CONNECTOR-ADAPTER RECEPTACLES

Adapter receptacles mount directly to microphones or similar equipment to provide highly reliable 3-, 4- and 5-pin Switchcraft Q-G® connections. Adapter shell and coupling nut are brass, satin nickel finish.

SERIES L(*)MN

Male has plain cylindrical shell with knurled, internally threaded collar to engage external 13/16-27 threads on microphone body.



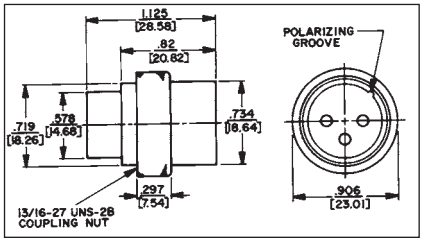

SERIES M(*)M

Male with shell having 13/16-27 external threads to engage equipment with internally threaded body. Terminals extend out rear (threaded end) to permit wiring without disassembly.



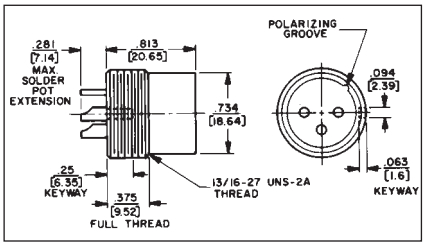

Part Numbers		
Series L(*)MN	Series M(*)M	Insert Pins
◊L3MN	◊M3M	3
◊L4MN	◊M4M	4
◊L5MN	◊M5M	5

SPECIFYING FEATURES

- Plug-in impedance changes
- Fully wired
- Connections bi-directional (low to high impedance or high to low impedance)
- Rugged die-cast housings
- Mu-metal shielding

MATERIAL SPECIFICATIONS

Shell: Die-cast zinc shell, nickel-plated with black non-glare metalized foil label.
Shielding: Mu-metal.
Dimensions: Diameter–.75" (19.05 mm) nominal Length – 3" (76.2 mm) nominal (Part Number 92XX); 3.375" (85.73 mm) nominal (Part Number 91XX).

ELECTRICAL SPECIFICATIONS

Frequency Response: Flat–20 Hz to 20 kHz ± 2 decibels
Impedance: High–50 K ohms (nominal); Low–150 ohms (nominal)
Voltage Step Ratio (Input Power Level); Low to High: +29 decibels (typical); high to low: -29 decibels (typical)

Z MATCHING TRANSFORMERS



9144



9244

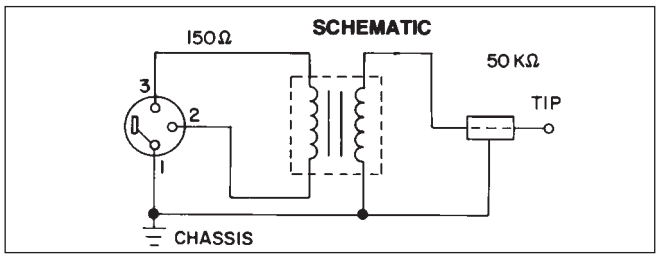

Series 9000 Line Matching Transformers offer low-loss interconnections between high and low impedance equipment. Exclusive mu-metal shielding protects against spurious electrostatic and RF fields. Units are bi-directional and can be used as follows:

- Low to hi, such as professional low impedance microphones to high impedance amplifiers. Stereos, cassette recorders, public address systems, and mixers.
- Hi to low, such as high impedance microphones or electronic instruments to low impedance amplifiers or mixers.

Designed to mate with Switchcraft Q-G® connectors. Available with various terminations; see chart.

Part Number	Switchcraft Connector	
◊9115	**Lo Z:** 3-contact Q-G® female, A3F	**Hi Z:** 2-conductor phone plug, 1/4" finger diameter, right angle handle, 4" extension (shielded) cable
◊9129	**Lo Z:** 3-contact Q-G® female, A3F	**Hi Z:** 2-conductor phono plug, right angle handle, 4 inch extension (shielded) cable
9144	**Lo Z:** 3-contact Q-G® female, A3F	**Hi Z:** 2-conductor phone plug, 1/4" finger diameter
9244	**Lo Z:** 3-pin Q-G® male, A3M	

◊ Available on special order only; contact Switchcraft for price and delivery.

DIMENSIONS ARE FOR REFERENCE ONLY Inch (mm)

® Registered trademark of Switchcraft, Inc.
Note: Contact your Switchcraft Representative for price and delivery

* Please visit the product pages on our website for the most up-to-date product information

TINI Q-G® MINIATURE CONNECTORS

Series TA(*)F, TA(*)FB, TA(*)FL and TA(*)FLB – Straight female cord plug
Series TA(*)M, TA(*)MB, TA(*)ML and TA(*)MLB – Straight male cord plug
Series TB(*)M and TB(*)MB – Chassis/panel mount male receptacle
Series TY(*)F and TY(*)FPC – Chassis/panel, female receptacle, choice of solder lugs or P.C. terminations.
Series TLP – Looping Plugs
Series TBA(* *) – Audio Adapters
Series TRA(*)M – PC Mount Male Receptacles
Series TRG(*) – Reverse Gender Panel Mount, Cord Mount


TA3F


TA3M

DESIGN FEATURES

STYLE – Streamlined, miniaturized with nickel-plated metal and contrasting black plastic parts. Designed for light weight and unobtrusiveness. Also available in conductive black chrome finish.

CONSTRUCTION – Metal parts are rugged die-cast or precision machined with nickel-plating; plastic parts are molded of high dimensional-stability thermoplastic. Advanced design assures minimum weight consistent with strength and durability of cord plug housings of .413" (10.5 mm) diameter Weight: Series TA(*)F plug = .25 ounce (7 g); Series TA(*)M = .3 ounce (8.5 g).

INSERTS – Precision molded of thermoplastic for high mechanical and dielectric strength. Contacts and terminals are precision formed and plated for intimate contact and low resistance connections. Terminal numbers are molded on rear of male insert and on face of female insert for easy identification (except 6-pin male insert). Inserts can be supplied for OEM installation in microphones and instrumentation for optimum connecting reliability. For cord plugs, inserts can also be supplied for replacements.

LATCHLOCK – Positive latch system assures high integrity, vibration-resistant mating and transfer of shielding connection between housing, combined with simple, easy fingertip release.

STRAIN RELIEF – Rugged internal clamp holds cable tightly, while making a secure, low resistance connection between cable shield and housing.

FLEX RELIEF – Protects by minimizing cable bending stress at point of cable entry. Maximum recommended cable diameter is .115" (2.92 mm) when flex relief is used. By omitting flex relief (Series T(*)FL and T(*)ML only), cable up to .170" (4.32 mm) diameter can be used.

ASSEMBLY – Connector parts are mechanically keyed for simple assembly.

POLARIZATION – Mating male and female connectors are also mechanically keyed (latch and groove) so that it is impossible to mate them incorrectly.

"SCOOP-PROOF" FEATURE – Fully recessed pins on male plugs and receptacles cannot be "scooped", bent or damaged by accidental mismating with mating connector.

COLOR ESCUTCHEONS – Attractive color escutcheons, Series TYEF, are recommended for use with Series TY(*)F and TY(*)FPC receptacles (when rear mounted) for attractive panel trim, as well as color coding one or more connectors. Colors are: red, black, gray, green, blue, white and yellow.

CUSTOM Tini Q-G® CABLE ASSEMBLIES – On special order where production quantities warrant, Switchcraft can supply assembled and tested Tini Q-G® cables.

MOUNTING
Panel/Chassis Thickness:
Series TB(*)M: .25" (6.35 mm) maximum
Series TY(*)F:
Front—.375" (9.5 mm) maximum
Rear—.093" (2.3 mm) maximum
Series TY(*)FPC:
Front—.312" (7.9 mm) maximum
Rear—.093" (2.3 mm) maximum

TINI Q-G ® AUDIO ADAPTERS

Series TA Tini Q-G ® audio adapters have been designed to adapt Tini Q-G ® connections to standard audio connectors. Tini Q-G ® adapters convert to Switchcraft Q-G ® and QGP connectors and similar full-size connectors.




Part Number	Tini Q-G ® End Mates With	Q-G ® End Mates With
◊TA01	TA3F	A3M
◊TA02	TA4F	A4M
◊TA03	TA5F	A5M
◊TA04	TA3F	A3F
◊TA05	TA4F	A4F
◊TA06	TA5F	A5F

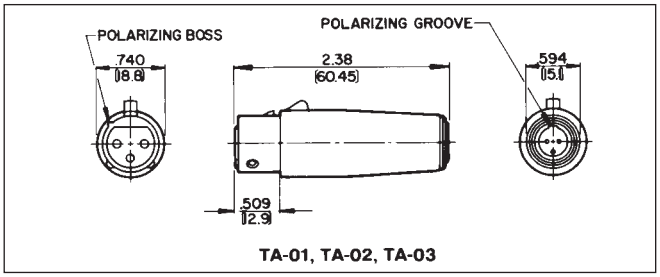

TA-01, TA-02, TA-03

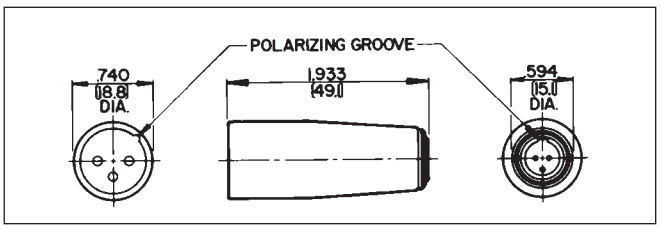

DIMENSIONS ARE FOR REFERENCE ONLY Inch (mm)

* Please visit the product pages on our website for the most up-to-date product information

TINI Q-G® MINIATURE CONNECTORS (continued)

SPECIFICATIONS: (3 – 5 CORD MOUNT ONLY)

ELECTRICAL
Contact Resistance: .010 ohms maximum after life (and after salt spray).
Current Rating (Carry Only): 5 A, 125 V AC (4 A, 125 V AC on 5 circuit) based on 30°C maximum.
Insulation Resistance: 510,000 megohms minimum @ 500 V DC (initial); 10,000 megohms minimum (after humidity test).
Dielectric Strength: 1,000 V (rms).

MECHANICAL
Life: 5,000 operations minimum
Insertion/Withdrawal Forces (after life): 6.1 lb./2.77 kg after life, insertion; 5.6 lb/2.54 kg, withdrawal.
Solderability Standard: Meets EIA RS-186-9E.
Mechanical Shock: Meets MIL-STD-202, method 213B.
Vibration: Meets MIL-STD-202, method 201A.
Wire Size: #22 wire gauge solid; #24 wire gauge stranded.

ENVIRONMENTAL
Thermal Range: -55°C to + 85°C.
Humidity: Meets MIL-STD-202, method 106D.
Thermal Shock: Meets MIL-STD-202, method 107D.
Salt Spray: Meets MIL-STD-202, method 101.

MATERIAL
Housing, Plugs and Male Receptacles: Copper alloy, nickel-plated. Female Receptacle–Die-cast zinc, nickel-plated.
Black Tini Q-G® Housing: Copper alloy, black chrome-plated.
Pin and Socket Contacts: Copper alloy, silver-plated.
Flex Relief: Molded black thermoplastic elastomer.
Latch Button: Molded black thermoplastic.
Release Lever and Mounting Washer: Steel, nickel-plated.
Standoff/Ground Terminal and Cable Clamp: Steel, electrotinned.
Inserts and Insulating Spacer: Molded, high strength thermoplastic.
Latch (Female): Copper alloy, nickel-plated.
Mounting Nut: Copper alloy, nickel-plated.

SPECIFICATIONS:
(6 – 8 Cord Mount and all Receptacles and Adapters)

ELECTRICAL
Contact Resistance: .010 ohm maximum after life.
Current Rating (Carry only): 1.5A, 125 VAC, based on 30° maximum
Insulation Resistance: 510,000 MΩ minimum @ 500 VDC (initial).
Dielectric Strength: 250 V rms.

MECHANICAL
Life: 2,000 operations
Insertion/Withdrawal Forces (after life): –13 pound insertion; –13 pound maximum withdrawal
Solderability Standard: Meets EIA RS-186-9E.
Wire Size: 28 wire gauge stranded.

MATERIAL
Housings, Plugs and Male Receptacles: Copper alloy, nickel-plated.
Socket Contacts: Copper alloy, silver-plated.
Pin Contacts: Copper alloy, electrotinned.
Flex Relief and Latch Button: Molded thermoplastic.
Ground Terminal: Copper alloy, electrotinned.
Inserts and Insulating Spacer: Molded high strength thermoplastic, UL 94 V-0.
Latch (Female): Copper alloy, nickel-plated.
Mounting Nut: Copper alloy, nickel-plated.
Ferrite: 43 material, shielded head.
Frame: Molded thermoplastic, UL 94 V-0.

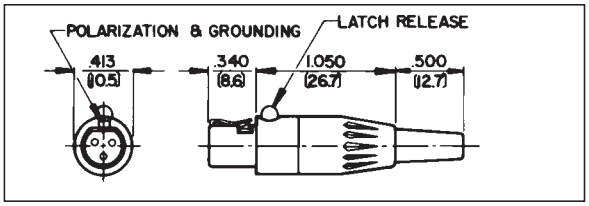

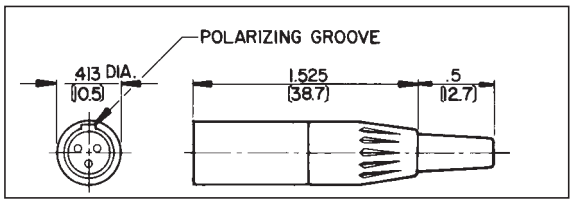

STRAIGHT FEMALE CORD PLUG

Part Number	Insert Contacts	Part Number	Insert Contacts[2]
TA3F	3	TA4FLB*	4
TA3FB*	3	TA5F	5
TA3FL[1]	3	TA5FL[1]	5
TA3FLB*	3	TA5FLB*	5
TA4F	4	TA6FL[1]	6
TA4FB*	4	TA7FL	7
TA4FL[1]	4	TA8FL	8

1 Flex relief omitted for larger diameter cable
2. Add AU to Part Number for Gold Contacts.
* B indicates black housing

STRAIGHT MALE CORD PLUG

Part Number	Insert Pins	Part Number	Insert Pins
TA3M	3	TA5M	5
TA3MB*	3	TA5ML	5
TA3ML	3	TA5MLB*	5
TA4M	4	TA6ML[1]	6
TA4MB*	4	TA7ML	7
TA4ML[1]	4	TA8ML	8

1. Add AU to Part Number for Gold Contacts.
* B indicates black housing

◊ Available on special order only; contact Switchcraft for price and delivery.

DIMENSIONS ARE FOR REFERENCE ONLY Inch (mm)

® Registered trademark of Switchcraft, Inc.
Note: Contact your Switchcraft Representative for price and delivery

* Please visit the product pages on our website for the most up-to-date product information

TINI Q-G® MINIATURE CONNECTORS (continued)

TB(*)M AND TB(*)MB RECEPTACLE



Male receptacle for chassis/panel mounting. Specially designed flange permits close (front) mount on crowded panels. Mounting hardware supplied. Available with PC terminals. Call factory for details.

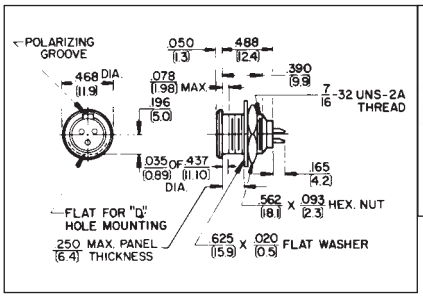

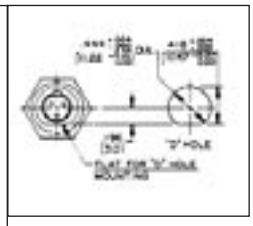

Part Number	Insert Pins	Part Number	Insert Pins
TB3M	3	TB5MB*	5
TB3MB*	3	TB6M	6
TB4M	4	TB7M	7
TB4MB*	4	TB8M	8
TB5M	5		

* B indicates black housing

TLP(*) LOOPING PLUG



Looping plug is designed for circuit testing. Other inserts and wiring patterns are possible; contact Switchcraft.

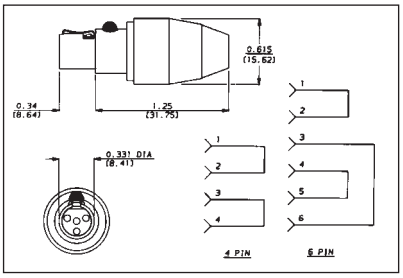

STRAIGHT FEMALE LOOPING PLUG

Part Number	Insert Contacts
◊TLP4	4
◊TLP6	6

◊ Available on special order only; contact Switchcraft for price and delivery.
* Number of insert contacts or pins must be specified to complete Part Number.



TRG4M

REVERSE GENDER TQG SERIES

Same specifications as the original TQG Series, however, the latch is on the male cord mount. Available in 4 pin only.



TRGS4F

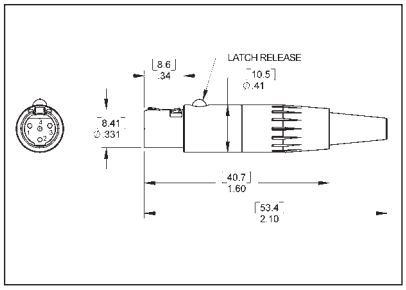

Part Number	Insert Pins	Description
TRGS4F	4	Panel mount female
TRG4M	4	Cord mount male w/latch

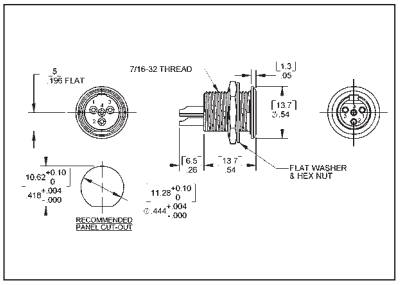

DIMENSIONS ARE FOR REFERENCE ONLY Inch (mm)

* Please visit the product pages on our website for the most up-to-date product information

TINI Q-G® MINIATURE CONNECTORS (continued)

TRA(*)M PC MOUNT MALE RECEPTACLE

The TRA(*)M low profile male receptacles mount in minimum space from the rear of panel or chassis, and feature space-saving right-angle construction and PC type terminals. The TRA3M is a cost-effective choice for audio equipment, medical instrumentation, computer equipment and test/measurement applications. Also available with 6 pins.

Part Number	Insert Pins
TRA3M	3
TRA6M	6
TRA6MF*	6

*F designates ferrite shielding.

TRA3M



TRA6M



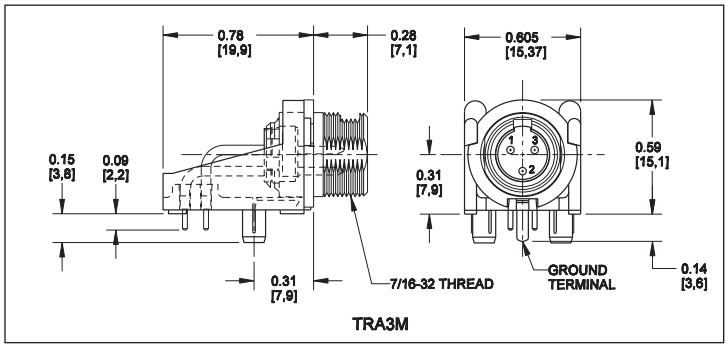

TRA3M

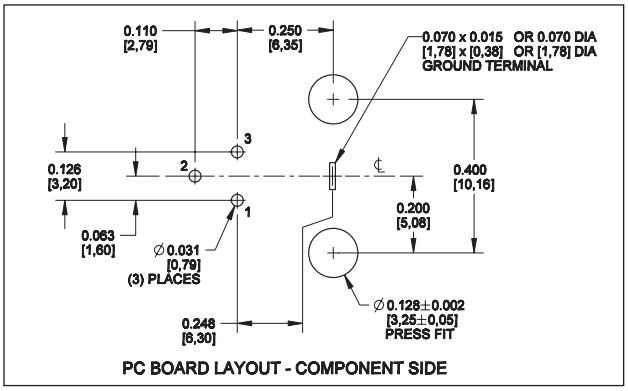

PC BOARD LAYOUT - COMPONENT SIDE

TRASM*M, TRAPC*M SERIES

Switchcraft introduces an expansion of its popular TQG Series of connectors. The TRASM*M and TRAPC*M offers low profile, right angle PC board mount connectors. The TRASM*M versions are true surface mount connectors, while the TRAPC*M versions are through-hole PC mount connectors. Both versions are available in 3-8 pins. All plastic connectors, the TRASM*M and TRAPC*M series have flats on the top of the connectors to facilitate pick and place assembly. As an added option, a non-threaded bushing version is also available.

FEATURES AND BENEFITS

- Low profile, compact design reduces PC board space
- Mates with TQG female cord plugs
- Rated at 5A for 3-6 pins, 3A for 7 and 8 pin versions

MARKETS

- Wireless microphone systems
- Medical Instrumentation
- Test Instrumentation

SPECIFICATIONS

MATERIALS

Housing: Thermoplastic
Contacts: Brass, tin-plated
Nut and Washer: Brass, nickel-plated

TRASM3M



TRAPC3MS



ELECTRICAL

Current Rating: 5A for 3-5 pins, 1.5A for 6-8
Contact Resistance: 10 m Ohm max
Insulation Resistance: 100 m Ohm min
Dielectric Withstanding Voltage: 250VAC
Mechanical Life: 2,000 cycles

TINI Q-G® CONNECTORS ORDERING INFORMATION

T RA ___ ___ M ___ ___ ___ ___

Tini QG

Right Angle

Termination
PC - Thru Hole
SM - Surface Mount

Contacts Configuration
3 - 8

Contact Gender
M - Male

Reel Size
15" reel, standard tape and reel size

Optional Packaging
TR - Tape and Reel
(std packaging - bulk)

Optional Modifier
1 - no thread

Optional Modifier
S - small Profile (available in configurations 3&4 only)

See next pages for drawings

DIMENSIONS ARE FOR REFERENCE ONLY Inch (mm)

® Registered trademark of Switchcraft, Inc.
Note: Contact your Switchcraft Representative for price and delivery

* Please visit the product pages on our website for the most up-to-date product information

TINI Q-G ® MINIATURE CONNECTORS (continued)

TRASM*M, TRAPC*M SERIES

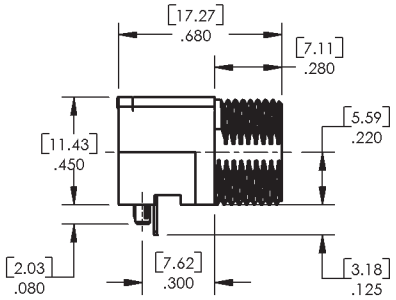

SMALL PROFILE
THRU HOLE TERMINATION

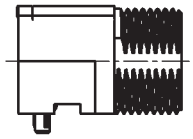

SMALL PROFILE
SURFACE MOUNT TERMINATION

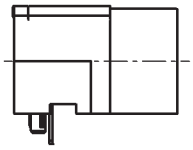

SMALL PROFILE
NO THREAD OPTION
(THRU HOLE SHOWN)

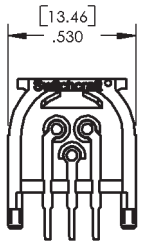

REAR VIEW
(CONFIG. 3 THRU HOLE SHOWN)

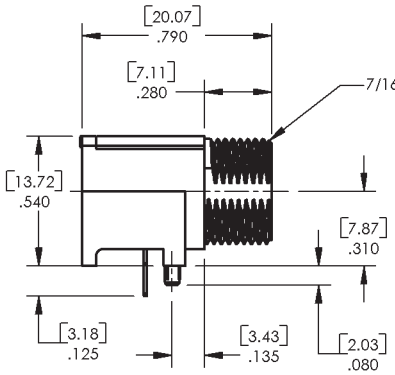

THRU HOLE TERMINATION
SINGLE ROW
(CONFIG. 3 & 4)

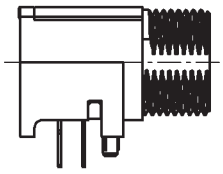

THRU HOLE TERMINATION
DOUBLE ROW
(CONFIG. 5, 6, 7, & 8)

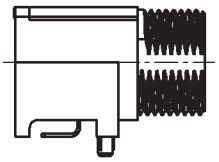

SURFACE MOUNT TERMINATION
SINGLE ROW
(CONFIG. 3 & 4)

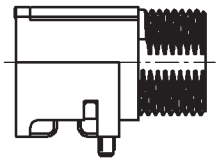

SURFACE MOUNT TERMINATION
DOUBLE ROW
(CONFIG. 5, 6, 7, & 8)

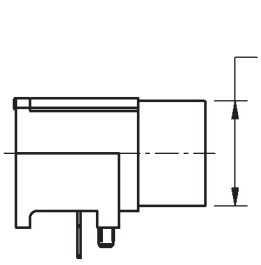

NO THREAD OPTION
(SINGLE ROW THRU HOLE SHOWN)

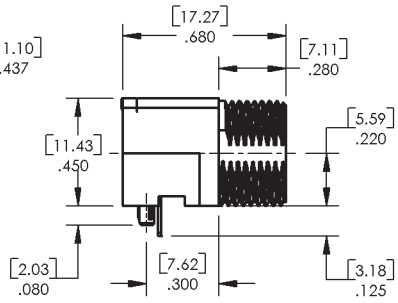

SMALL PROFILE
THRU HOLE TERMINATION

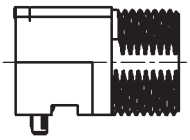

SMALL PROFILE
SURFACE MOUNT TERMINATION

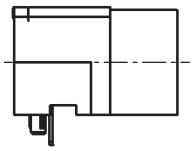

SMALL PROFILE
NO THREAD OPTION
(THRU HOLE SHOWN)

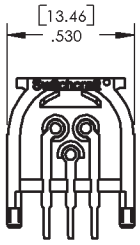

REAR VIEW
(CONFIG. 3 THRU HOLE SHOWN)

DIMENSIONS ARE FOR REFERENCE ONLY Inch / (mm)

* Please visit the product pages on our website for the most up-to-date product information

TINI Q-G ® MINIATURE CONNECTORS (continued)

TRASM*M, TRAPC*M SERIES

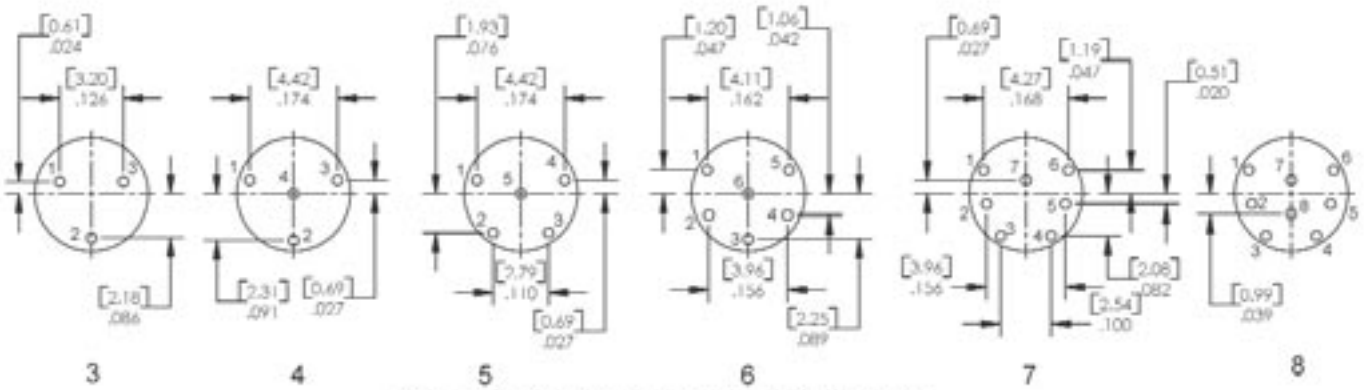

CONTACT CONFIGURATIONS (FRONT VIEW)

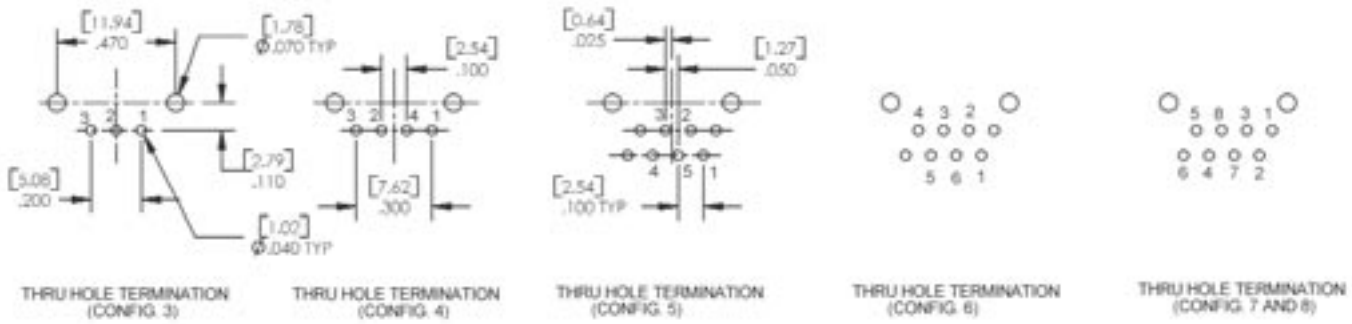

THRU HOLE TERMINATION (CONFIG. 3) | THRU HOLE TERMINATION (CONFIG. 4) | THRU HOLE TERMINATION (CONFIG. 5) | THRU HOLE TERMINATION (CONFIG. 6) | THRU HOLE TERMINATION (CONFIG. 7 AND 8)

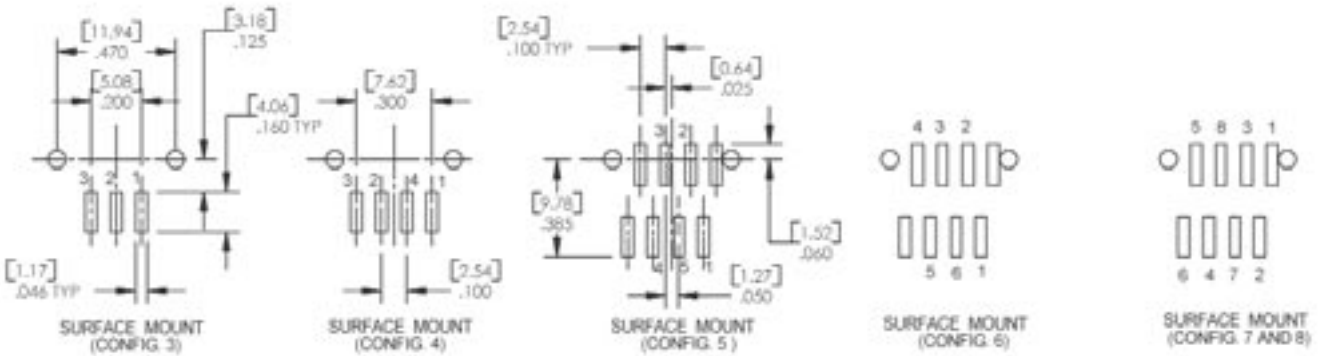

SURFACE MOUNT (CONFIG. 3) | SURFACE MOUNT (CONFIG. 4) | SURFACE MOUNT (CONFIG. 5) | SURFACE MOUNT (CONFIG. 6) | SURFACE MOUNT (CONFIG. 7 AND 8)

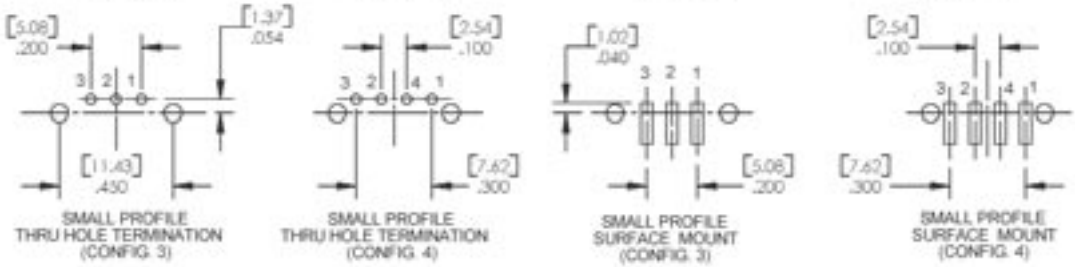

SMALL PROFILE THRU HOLE TERMINATION (CONFIG. 3) | SMALL PROFILE THRU HOLE TERMINATION (CONFIG. 4) | SMALL PROFILE SURFACE MOUNT (CONFIG. 3) | SMALL PROFILE SURFACE MOUNT (CONFIG. 4)

RECOMMENDED PC BOARD LAYOUTS

DIMENSIONS ARE FOR REFERENCE ONLY Inch (mm)

® Registered trademark of Switchcraft, Inc.
Note: Contact your Switchcraft Representative for price and delivery

* Please visit the product pages on our website for the most up-to-date product information

TINI Q-G ® MINIATURE CONNECTORS (continued) ®

TY(*)F AND TY(*)FPC RECEPTACLES

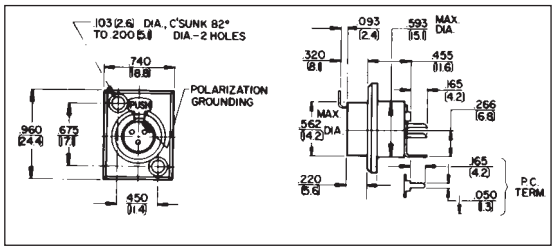

Female receptacle mounts in minimum space from front or rear panel or chassis. Terminals are solder lugs, Series TY(*)F, or P.C., Series TY(*)FPC. All receptacles have separate ground lug.

Part Number	Insert Contacts	Part Number	Insert Contacts
TY3F	3	TY5F	5
TY3FPC	3	TY5FPC	5
TY4F	4		
TY4FPC	4		

MOUNTING HOLE DETAIL SERIES TY(*)F, TY(*)FPC

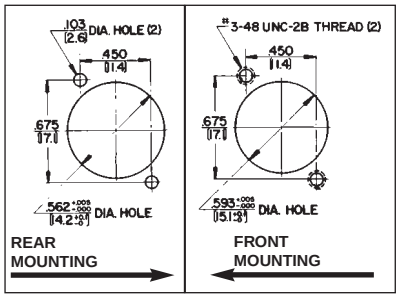

COMBINED P.C./PANEL MOUNTING

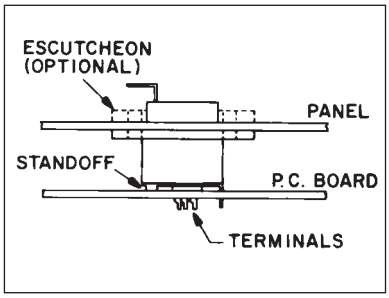

RECOMMENDED P.C. BOARD LAYOUT

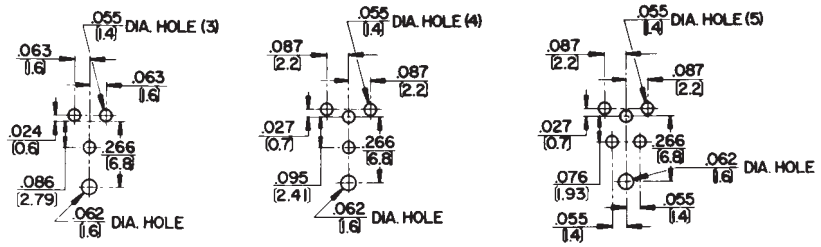

TYEF ESCUTCHEONS

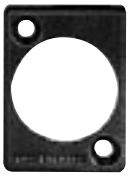

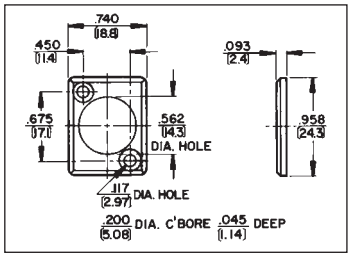

Trim escutcheons in seven colors for use with Series TY(*)F and TY(*)FPC receptacles, are recommended for rear mount receptacles. Escutcheons must be ordered separately.

Part Number	Color
◊TYEF01	Red
TYEF02	Black
◊TYEF03	Green
◊TYEF04	Blue
◊TYEF05	White
◊TYEF08	Yellow
◊TYEF11	Gray

TQG(*)F AND TQG(*)M CONNECTOR INSERTS



Male and female inserts with 3, 4, 5 or 6 pins/ contacts. For replacement (cord plugs only) or build-into equipment, such as microphones, transducers and instruments.

Male Inserts

Part Number	Insert Pins
TQG3M	3
TQG4M	4
TQG5M	5
◊TQG6M	6

Female Inserts

Part Number	Insert Contacts
TQG3F	3
TQG4F	4
TQG5F	5
◊TQG6F	6

TBA(**) AUDIO ADAPTER



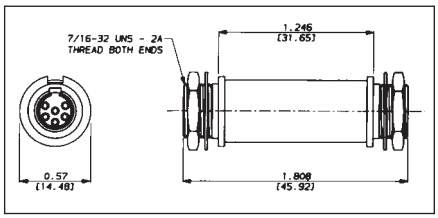

3–6 pin male-to-male adapter is designed for through-bulkhead or cable expansion usage. Adapter is prewired pin 1 to pin 1, pin 2 to pin 2, etc. Mounting nuts are supplied for each threaded end. Panel hole diameter required is .45"; maximum panel thickness is .25" (6.35 mm).

Part Number	Insert Pins
◊TBA03	3
◊TBA04	4
◊TBA05	5
◊TBA06	6

◊ Available on special order only; contact Switchcraft for price and delivery.

DIMENSIONS ARE FOR REFERENCE ONLY Inch (mm)

* Please visit the product pages on our website for the most up-to-date product information

HPC SERIES PANEL MOUNTS AND CORD PLUGS



HPCPR41F HPCP41F HPCP410RA HPCI4F HPCC4F HPCC4RAF

HPC SERIES

Switchcraft recently introduced a complete line of panel mount speaker connectors that are completely compatible with the Neutrik® Speakon® 4 pole series. We are now introducing a complete line of cable mounts as well. The complete HPC Series offers both panel mount and cord mount connectors.

The HPC panel mounts have been updated with new silver-plated contact materials that boost the contact ratings to 30A per UL 1977 on PC mount versions, 50A per UL 1977 on Faston® versions. They are still available with either 0.100" depth flanges or 0.200" depth flanges. The 0.200" depth flange allows for rear mounting of the HPC Series, and proper mating of all cord plugs. The panel mount versions are available with either 0.187" or 0.250" Faston® terminals, and either straight or right angle PC mount terminals. The right angle PC mount version also has, as an option, a mounting post which allows the connector to snap onto the PC board for wave soldering.

The HPC cord plugs are available in either straight, right angle, or as an in-line. The in-line version mates with either the straight or right angle cord plug, allowing the end user to extend cable runs. All cord plugs are compatible with Speakon® panel mounts. The in-line mates with our HPC cord plugs, as well as Speakon® cord plugs. The unique feature of the HPC series cord plugs are the “push to lock” feature, similar to the connection of an XLR connector. The HPC cord plugs, when mated to either HPC panel mounts or Speakon® panel mounts do not require a 1/4" turn to engage. Simply push the connector in until it locks. To disengage, push forward on the latch lever and pull the connector out. This feature eliminates the need to remember to turn the connector to make contact. All HPC cord plugs utilize 0.250" Faston® terminals, which allow for easy assembly, and make it easy to change cord plugs. To change from a straight cord plug to an in-line cord plug, back off the strain relief nut, twist off the handle, disconnect the Faston® terminals, fasten the new cord connector, twist on the handle and the strain relief. Barbs on the handle keep the handle from vibrating loose from the front shell.

Both HPC panel mounts and cord plugs incorporate a built-in gasket, which allows them to meet IP 25 harsh environment ratings, as well as IEC 529 and IEC 1010-1 safety ratings.

FEATURES AND BENEFITS

- Completely compatible with Neutrik® Speakon® 4 pole connectors
- 30A rating per UL 1977 on PC mount versions
- 50A rating per UL 1977 on Faston® versions
- Panel mounts have two different Faston® terminal sizes, 0.187" and 0.250"
- Panel mounts offered with two different flange depths, 0.100" and 0.200"
- 0.200" depth flange offers easy rear mounting
- Right angle or straight PC board terminals on panel mounts
- Built in gasket gives all HPC connectors IP 25 environmental ratings
- All HPC Series meet IEC 529 and IEC 1010-1 safety ratings
- Cord plug versions offer “push to lock” design, no 1/4" turn to engage
- Cord plug versions accept 10 AWG wire, 0.560" cable OD max

APPLICATIONS

- Loudspeakers
- Power audio amplifiers

SPECIFICATIONS

Materials

Housings: Thermoplastic UL 94V-O rated
Seal Rings: Thermoplastic rubber
Contacts: Silver-plated over copper alloy

ELECTRICAL

PC Terminals Current Rating: 30A per UL 1977
Faston® Terminals Current Rating: 50A RMS w/10AWG wire, normal ambient, per UL 1977
Voltage Rating: 1,500 AC RMS, Per Mil-Std 202 Method 301
Insulation Resistance: > 2T Ohms
Contact Resistance: 1m Ohm, 1.5mOhm after 1,000 insertion/withdrawals

MECHANICAL

Shock: Mil-Std 202, Method 213B Cond.K
Vibration: Mil-Std 202, Method 201A
Life: 1,000 insertion/withdrawals
Cable Range: 0.560” OD max

ENVIRONMENTAL

Salt Spray: Mil-Std 202, Method 101D Cond. B
Thermal Shock: Mil-Std 202, Method 107G
Temperature Limits: -55 C to +85 C
Moisture Resistance: Mil-Std 202, Method 106E
Life@Ambient Temperature: Mil-Std 202, Method 108A
Touch Proof: IEC 65 and 1010-1
Weather Tightness: IEC 529, IP 25

CORD MOUNT ORDERING INFORMATION

Part Number	Description
HPCC4F	Straight Cord Plug
HPCI4F	Inline Cord Plug
HPCC4RAF	Right Angle Cord Plug

DIMENSIONS ARE FOR REFERENCE ONLY Inch (mm)

® Registered trademark of Switchcraft, Inc.
Note: Contact your Switchcraft Representative for price and delivery

* Please visit the product pages on our website for the most up-to-date product information

PANEL MOUNT ORDERING INFORMATION

HPC P ___ 4 ___ ___ ___

Series
High Power Connector

Type of Connector
P - Panel

Type of Housing
Blank - rectangle
R - round

Number of Contacts
4

Termination
F - .250" Faston® ; F1 - .187" Faston®; PC - Printed Circuit
RA - Right angle PC; RAP - Right angle PC with mounting post

Mounting Holes
Blank - Rectangle: .140" dia. w/Countersink Hole
Blank - Round: .152" dia. w/Countersink Hole
0 - Rec./ Round: .093" Dia. Hole

Recessed Flange (Dim. "A")
1 - .100"; 2 - .200"

FOR ALL TERMINAL CONFIGURATIONS SHOWN, ROUND HOUSING COUNTERPARTS EXIST

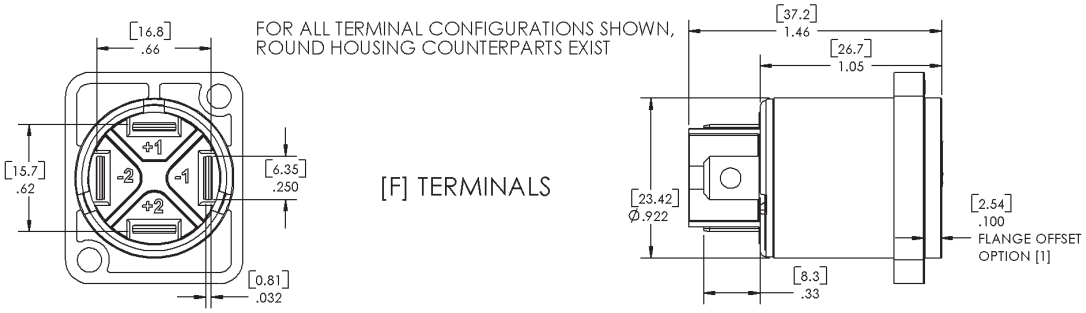

[F] TERMINALS

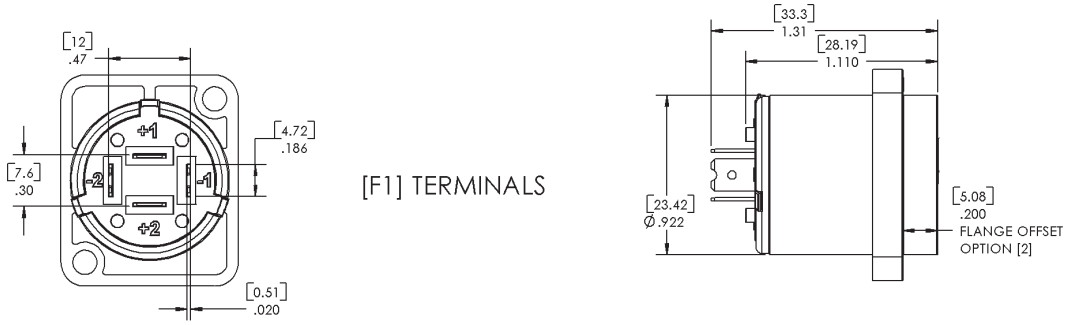

[F1] TERMINALS

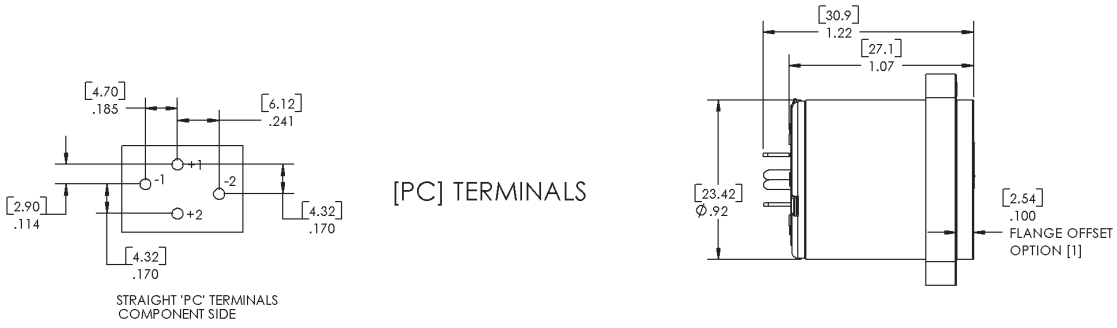

[PC] TERMINALS

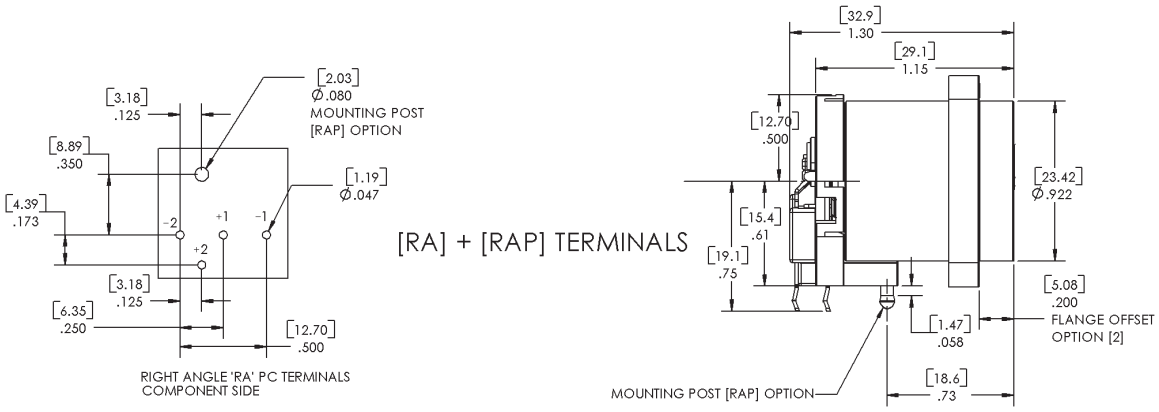

[RA] + [RAP] TERMINALS

DIMENSIONS ARE FOR REFERENCE ONLY Inch (mm)

* Please visit the product pages on our website for the most up-to-date product information

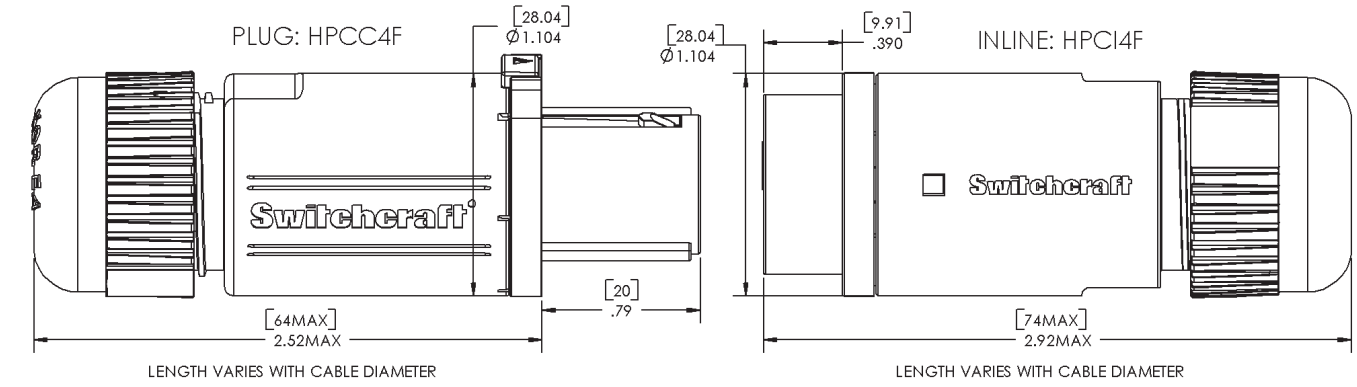

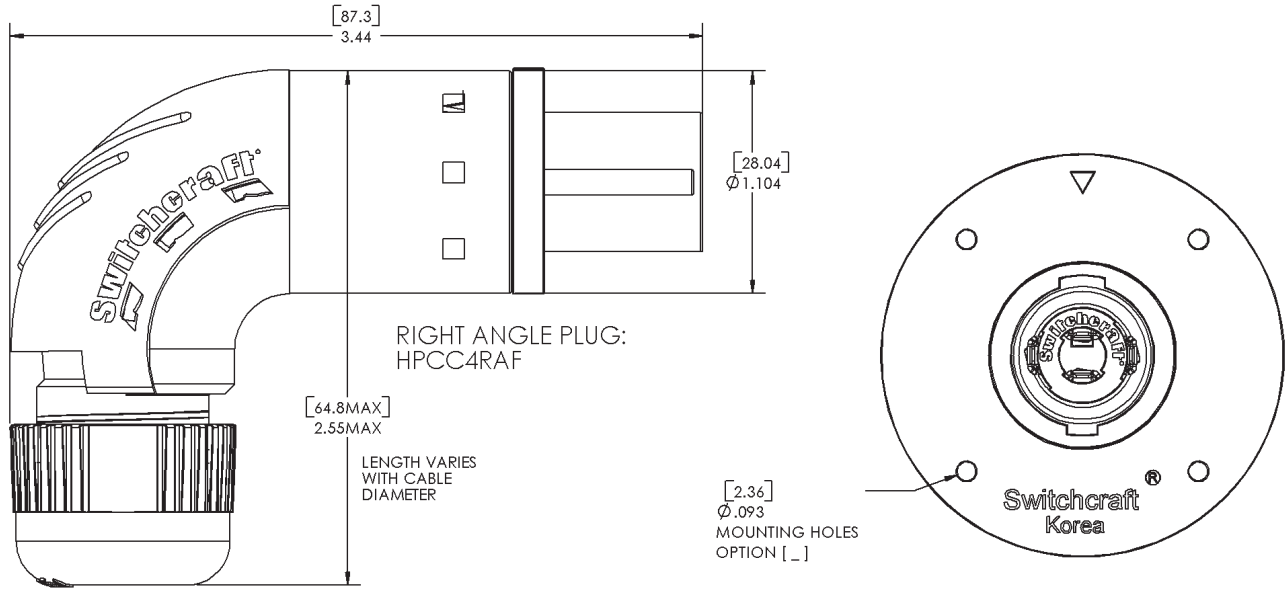

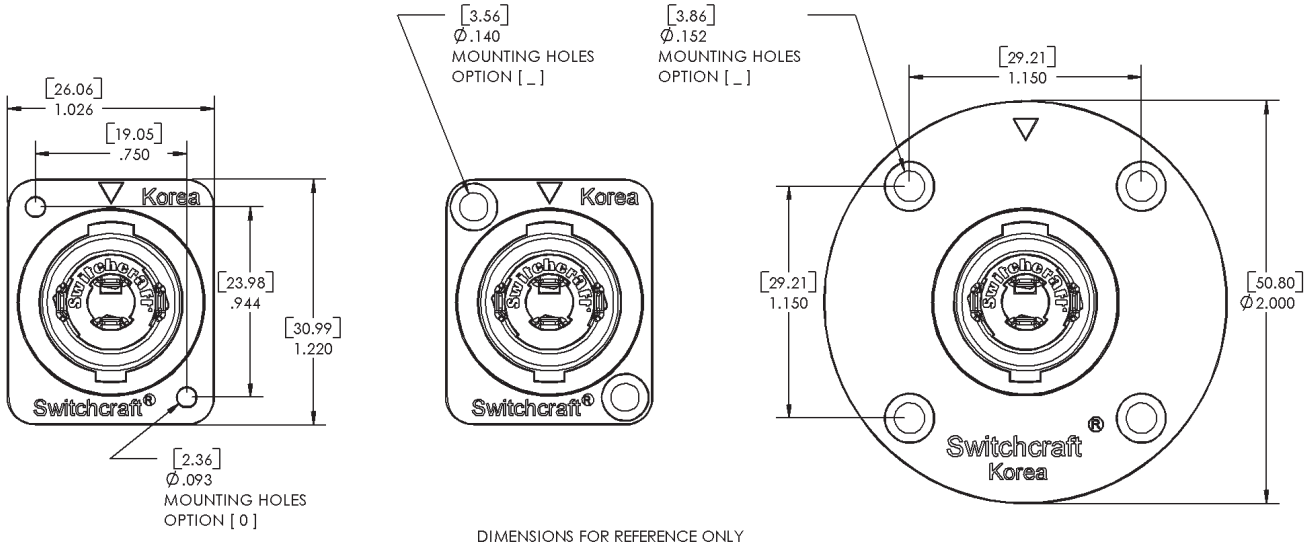

DIMENSIONS FOR REFERENCE ONLY

DIMENSIONS ARE FOR REFERENCE ONLY Inch (mm)

® Registered trademark of Switchcraft, Inc.
Note: Contact your Switchcraft Representative for price and delivery

* Please visit the product pages on our website for the most up-to-date product information

EN3™ MINI WEATHERTIGHT CONNECTOR SERIES

GENERAL FEATURES AND BENEFITS

- Great all-purpose connector "weather" or not sealing feature is required.
- Superior leakage protection. Contact area is double-sealed for excellent moisture and chemical resistance when mated to Switchcraft's connectors.
- Integral O-ring and gasket. O-ring is molded onto cord housing assembly and gasket is molded onto panel housing assembly to prevent leakage and eliminate need for additional O-rings and gaskets.
- Reduced part count for reduced labor to assemble.
- No Grommets. Cable clamp assembly features living hinges, which snap easily onto and support the cable.
- Thermoplastic rubber body simulates closed entry contact system to prevent probe damage or accidental loss of spring retention due to misaligned or bent pins.
- Abrasion-resistant thermoplastic boot provides strain relief and accepts cable diameter .195" to .265".
- Housing rated UL 94V-O against flammability.
- Panel connector shell features a positioning keyway to prevent misalignments and a polarizing single "D" design for proper panel mounting and to prevent rotational movement.
- 2-18 pins.
- Exceeds Coast Guard specifications for water tightness (CFR 46 Part 110.20).
- Optional cap covers panel housing assembly when not in use.
- Exceeds enclosure rating IP16/IP18 when not mated or covered and IP66/IP68 when mated or covered (IEC 529).
- Exceeds enclosure rating 6P at 1000V when mated or covered (NEMA 250).

MATING INSTRUCTIONS FOR A CORD CONNECTOR TO A PANEL MOUNT OR IN-LINE CONNECTOR

First, align the notched keyway on both the panel mount or in-line and cord connector. Then, push the cord connector onto the mating connector. Grasp the coupling ring between the slots, push it toward the panel mount connector and rotate it clockwise nearly one half a turn. Continue rotating until you feel the coupling ring ride over the locking "bump". This is the locked position. The cord connector is not securely in place unless this procedure is followed.

APPLICATIONS

Process Control	Communications
Marine Electronics	Transportation
Medical Instrumentation	General Industrial Electronics
Geothermal Instrumentation	Harsh Environments

MATERIALS

Cord and panel connector shells, contact locking disk, and cable clamp assembly: Thermoplastic polymer glass fiber, flame retardant
Coupling ring: Nylon
Rear boot and connector shell interior: Thermoplastic rubber
Contacts: Copper base alloy gold-plated over nickel underplate

SPECIFICATIONS

MECHANICAL

Shock: Mil-Std 202 Method 213B, condition K
Vibration: Mil-Std 202 Method 201
Life: 600 insertion/withdrawal cycles (minimum)

ELECTRICAL

Voltage Rating (sea level): Tested at 600 VRMS
Insulation Resistance: 100 megohms (minimum) at 77° F
Contact Resistance: 5 milliohms (maximum)
Current Rating: 3.0 Amps (#26 contact)– 9 through 18pin
6.5 Amps (#20 contact)– 7 and 8 pin
7.5 Amps (#20 contact)– 2 through 6 pin
13.0 Amps (#16 contact)– 2 and 3 pin

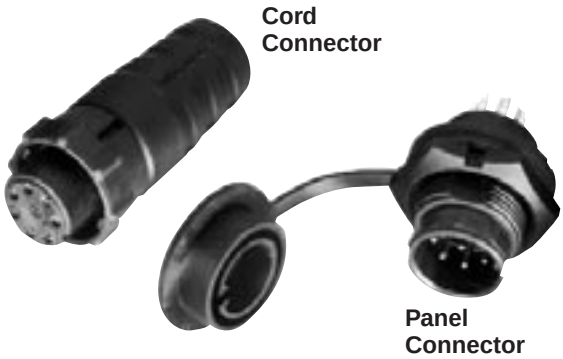

ENVIRONMENTAL

Temperature Limits: -40°C to +65°C (non-operating)
Moisture Resistance: Mil-Std 202 Method 106F
Insulation Resistance: Mil-Std 202 Method 302 condition B
Thermal Shock: Mil-Std 202 Method 107G
Salt Spray: Mil-Std 202 Method 101D condition B

RATINGS

IP16/IP18 CFR 46 Part 110.20
IP66/IP68 UL 94V-O
NEMA 250 (6P)

Patent 5,485,673 File 36049

EN3™ Weathertight Connector Current Carry Capability (per UL 498 Standard)

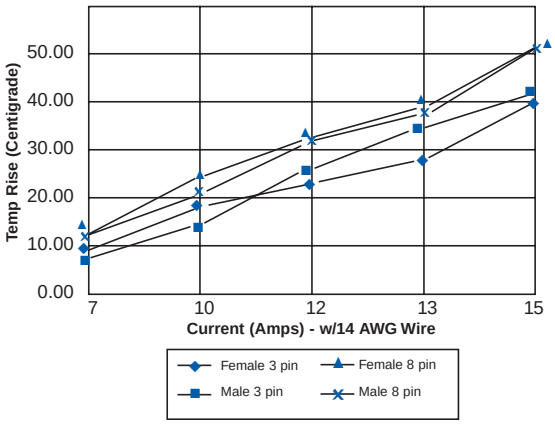

Dielectric Withstanding Voltage

Contact size/ number of contacts	Voltage
#20-2	3000
#20-4, #20-3, #16-2	2000
#20-7, #20-8, #16-3, #20-5, #20-6	1000

DIMENSIONS ARE FOR REFERENCE ONLY Inch (mm)

* Please visit the product pages on our website for the most up-to-date product information

CRIMP CONTACT INSERTION INSTRUCTIONS

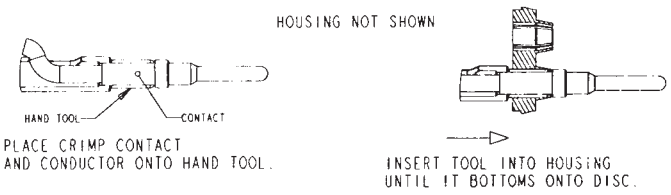

CRIMP CONTACT EXTRACTION INSTRUCTIONS

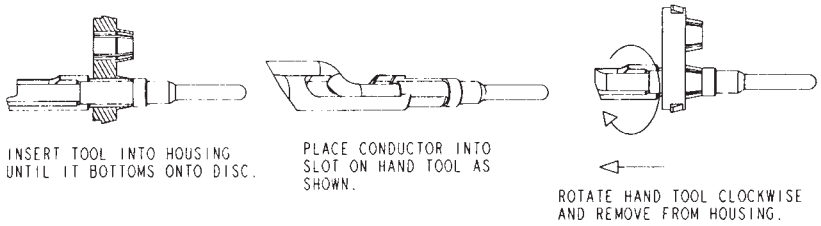

CRIMP TOOLS

Part Number	Tool Description
EN3INS16	Insertion/Extraction Tool for 16 AWG
EN3INS20	Insertion/Extraction Tool for 20 AWG
EN3CR	Crimp Hand Tool
EN3CRAUTO	Pneumatic Crimp Tool
EN3POS16	Positioner for 16 AWG contacts and pins
EN3POS20	Positioner for 20 AWG contacts and pins

NOTE: A positioner must be used with the EN3CR and EN3CRAUTO.

Note: Solder and PC contacts are factory assembled

CORD CONNECTOR ASSEMBLY INSTRUCTIONS

STEP 1

Cord Connector: To assemble the three-part cord connector, first feed the end of the cable through the boot, cable clamp housing, and coupling ring in that order and position as shown in the figure below. NOTE: The coupling ring can also be inserted onto the cord connector from the front. **In-line Connector:** Feed the end of the cable through the boot and cable clamp housing in the order and position shown.

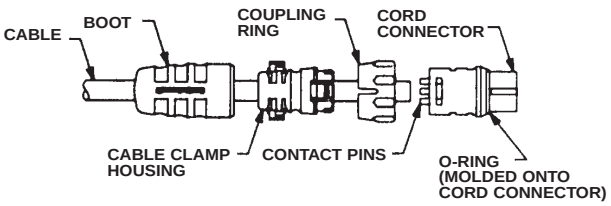

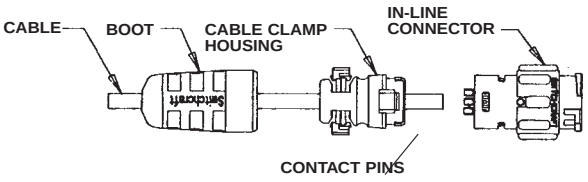

STEP 2

Next, strip the cable .218" as shown and begin soldering conductors to pins, or insert contacts crimped on wire starting with contact #1 next to the "notch" and following with the remaining conductors counter-clockwise with #6 or #8 conductor in the center.

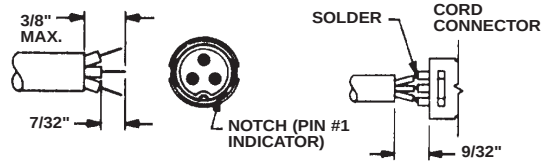

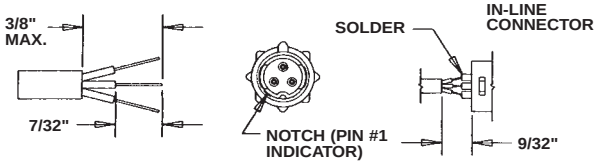

STEP 3

Push the cable clamp housing forward until it locks into the connector body and snap the two clamps into their compartments.

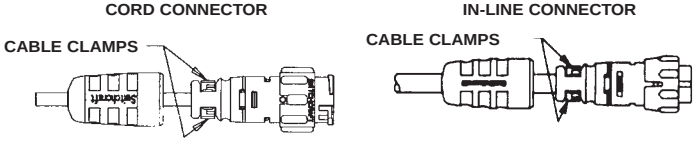

STEP 4

Finally, push the boot all the way forward to seat tightly onto the cable clamp housing.

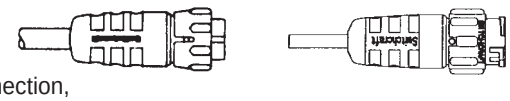

Remember: Cord connectors will not mate with each other. For cord-to-cord connection, your customer must order a cord connector plus an in-line connector.

DIMENSIONS ARE FOR REFERENCE ONLY Inch (mm)

® Registered trademark of Switchcraft, Inc.
Note: Contact your Switchcraft Representative for price and delivery

* Please visit the product pages on our website for the most up-to-date product information

EN3™ MINI WEATHERTIGHT CONNECTOR SERIES (continued)

2 – 8 PIN CORD CONNECTOR

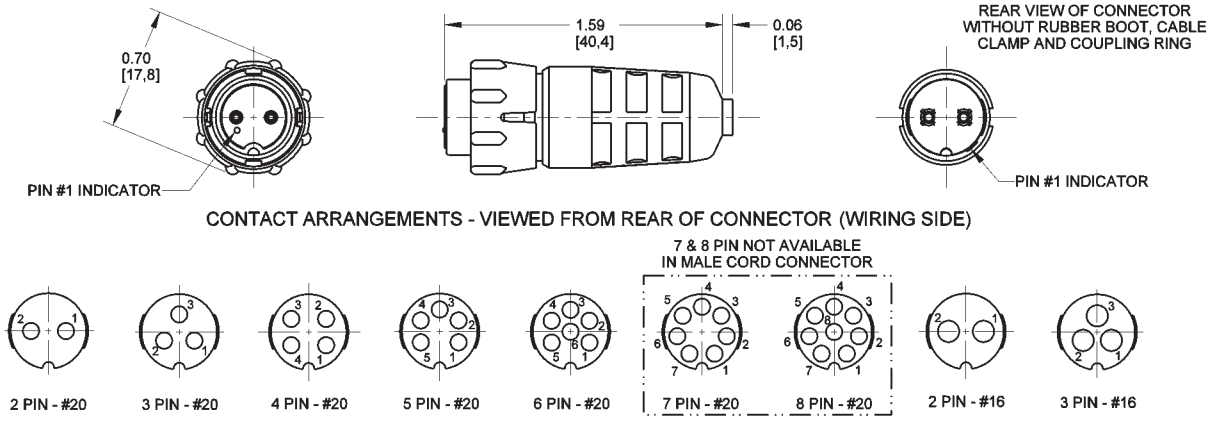

9 – 18 PIN CORD CONNECTOR

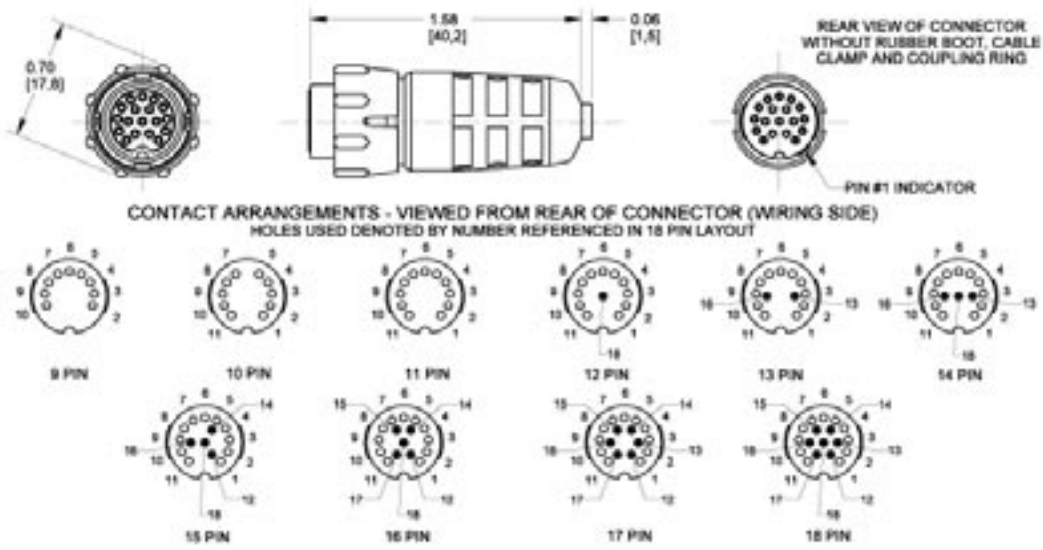

EN3 Cord Connector Part Number Scheme

Series	Style	Pins/ Contacts	Gender	Contact Size	Contact Style	Contact Plating	Packaging
EN3	C	2-18	F: Female M: Male	16: #16 Leave blank for #20 26: for 9-18 only	C: Crimp P: PC S: Staggered Leave blank for solder	AG: Silver Leave blank for gold	K: Kit Leave blank for bulk packaging

Notes:
7 & 8 pin not available in cord male
9-18 pin available in either staggered solder or straight solder only
9-18 pin available only with # 26 terminals
AG: Silver plating special order
#16 contact available in 2 & 3 pins only

DIMENSIONS ARE FOR REFERENCE ONLY Inch (mm)

* Please visit the product pages on our website for the most up-to-date product information

EN3™ MINI WEATHERTIGHT CONNECTOR SERIES (continued)

2 – 8 PIN PANEL CONNECTOR

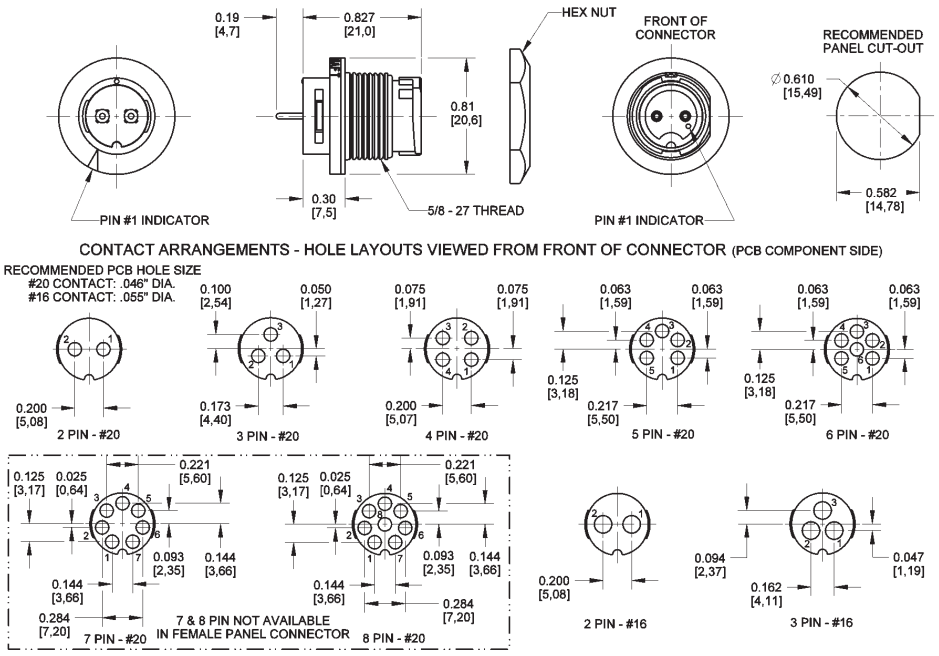

9 – 18 PIN PANEL CONNECTOR

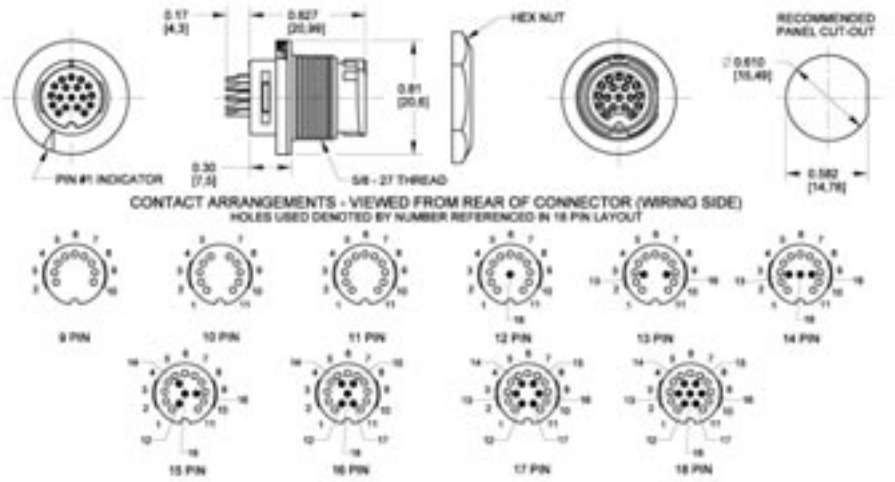

EN3 Panel Connector Part Number Scheme

Series	Style	Pins/ Contacts	Gender	Contact Size	Contact Style	Contact Plating	Packaging
EN3	P	2-18	F: Female M: Male	16: #16 Leave blank for #20 26: for 9-18 only	C: Crimp P: PC S: Staggered Leave blank for solder	AG: Silver Leave blank for gold	K: Kit Leave blank for bulk packaging

Notes: 7 & 8 pin not available in panel female
9-18 pin available in either staggered solder or straight solder only
9-18 pin available only with # 26 terminals
AG: Silver plating special order
#16 contact available in 2 & 3 pins only

DIMENSIONS ARE FOR REFERENCE ONLY Inch (mm)

® Registered trademark of Switchcraft, Inc.
Note: Contact your Switchcraft Representative for price and delivery

* Please visit the product pages on our website for the most up-to-date product information

EN3™ MINI WEATHERTIGHT CONNECTOR SERIES (continued)

2 – 8 PIN INLINE CONNECTOR

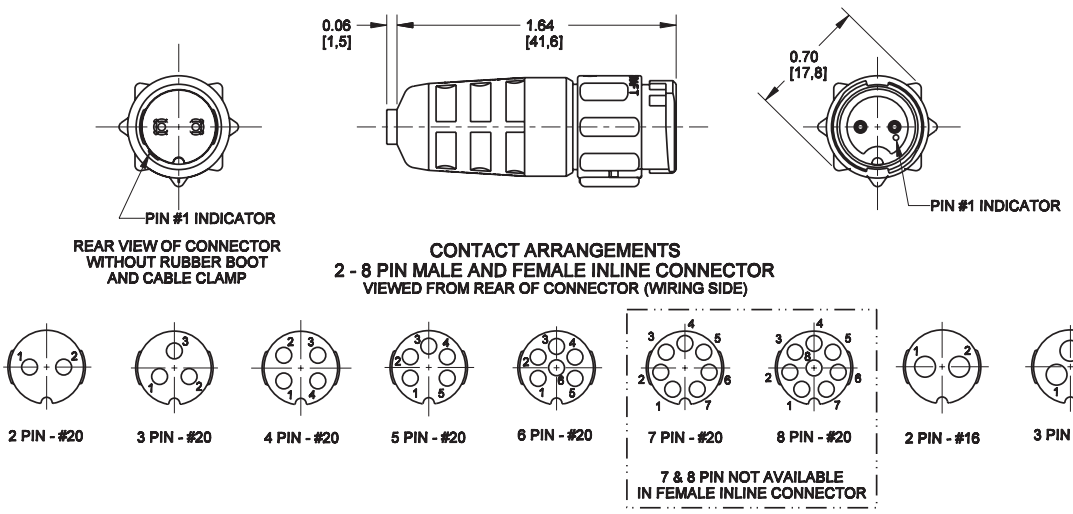

EN3 Inline Connector Part Number Scheme

Series	Style	Pins/ Contacts	Gender	Contact Size	Contact Style	Contact Plating	Packaging
EN3	I	2-8	F: Female M: Male	16: #16 Leave blank for #20	C: Crimp P: PC Leave blank for solder	AG: Silver Leave blank for gold	K: Kit Leave blank for bulk packaging

Notes: 7 & 8 pin not available in inline female
#16 contact available in 2 & 3 pins only
AG: Silver plating special order

2 – 8 PIN OVERMOLDED CORD AND INLINE CONNECTOR

(See Cable Section for More Details.)

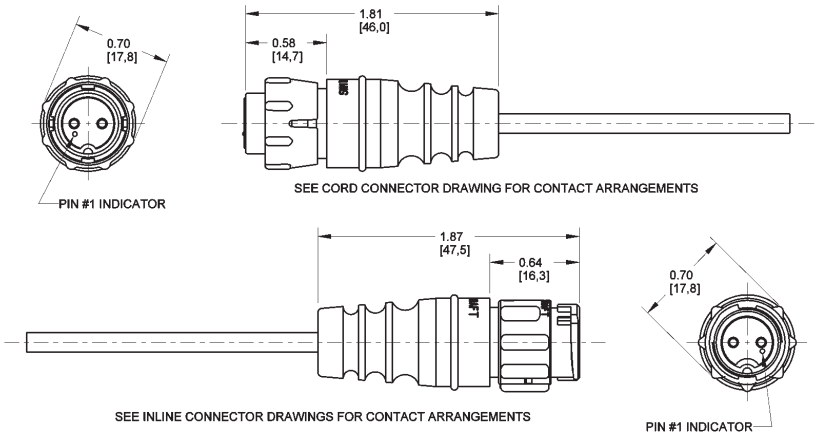

DIMENSIONS ARE FOR REFERENCE ONLY Inch (mm)

* Please visit the product pages on our website for the most up-to-date product information

DIN CONNECTORS

SPECIFICATIONS
ELECTRICAL

Contact Resistance: Cord Plugs and Receptacles; .010 ohms, contact spring/pin .030 ohms, ground clip/shell. Control and Switching Receptacles; .015 ohms, contact spring/pin; .020 ohms, switch contacts.
Dielectric Withstanding Voltage: 500 V (rms)
Contact Rating: 5-pin; 3A, 34 V DC
Leakage Resistance: 10^5 MΩ
Recommended Wire Size: 22 wire gauge maximum

MECHANICAL
INSERTION/WITHDRAWAL FORCES:

Number of Contacts	Insertion Force pound/N	Withdrawal Force pound/N
2	3.6/(16)	.45- 2.7/(2-12)
3	5.4/(24)	.67- 4.1/(3-18)
4	7.2/(32)	.90- 5.4/(4-24)
5	9.0/(40)	1.24- 6.8/(5.5-30)
6	10.8/(48)	1.46- 8.1/(6.5-36)
7	12.6/(56)	1.68- 9.5/(7.5-42)
8	14.4/(64)	1.90-10.8/(8.5-48)

NOTE: All connectors meet DIN specifications #41524. Din specification numbers (except for 4-pin, 5-pin @ 240°, and 8-pin @ 262°)

MATERIAL

Shell: Die-cast zinc alloy, nickel-plated.
Receptacle Mounting Flange: Steel.
Receptacle Body: Plastic.
Insert Material: Plastic.
Socket Contacts: Tin-plated.
Pin Contacts: Tin-plated.
Switching Contacts: Silver-plated.
Cable Relief Bushing: Soft plastic.

PIN ARRANGEMENTS

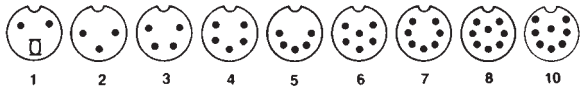

CONTACT ARRANGEMENTS

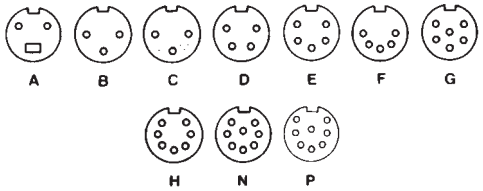

DIN PLUGS

STRAIGHT CORD PLUG
with 30° lock ring



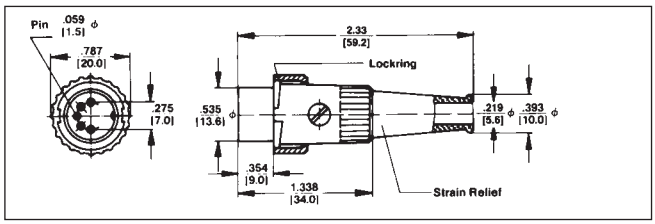

Type 05CL5M – typical Male plug with ground key-rib. Unique 30° turn lockring securely fastens two halves of connector. Mates with lock flange female connectors and receptacles. Insert screw holds insert assembly in shell and also retains lockring on shell. Flexible black strain relief with 7/32" diameter cable entry. Heavy duty clamp.

ORDERING INFORMATION

Part Number	Description	Pin Arrangement
05CL3M	3 pins at 180°	2
05CL5M	5 pins at 180°	5
09CL4M	4 pins at 210°	3
12CL5M	5 pins at 240°	4
◊15CL7M	7 pins at 270°	7
◊15CL8M	8 pins at 270°	9

◊ Available on special order only; contact Switchcraft for price and delivery.

STRAIGHT CORD PLUG
with Shielded Barrel



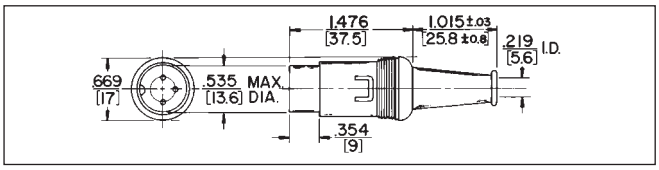

Type 15GM7M – typical: Male cord plug with shielded barrel and insulated snaplock plastic body. Two piece metal barrel surrounds pin insert to form an electrical shield. The entire insert assembly is held together by snapping the insulated plastic shell over the assembly. The barrel's special metal tab locks the shell in place. Standard color of plastic shell is gray. All-purpose cable clamp.

ORDERING INFORMATION

Part Number	Description	Pin Arrangement
05GM3M	3 pins at 180° Gray body and strain relief.	2
05GM5M	5 pins at 180° Gray body and strain relief	5
◊09GM4M	4 pins at 210° Gray body and strain relief	3
12GM5M	5 pins at 240° Gray body and strain relief	4
◊12GM6M	6 pins at 240° Gray body and strain relief	6
15GM7M	7 pins at 270° Gray body and strain relief	7
15GM8M	8 pins at 270° Gray body and strain relief	9
◊20GM8M	8 pins at 262° Gray body and strain relief	10

SPECIFYING NOTE: Use letter "JL" in place of "GM" to order same part number with black housing.

DIMENSIONS ARE FOR REFERENCE ONLY Inch (mm)

® Registered trademark of Switchcraft, Inc.
Note: Contact your Switchcraft Representative for price and delivery

* Please visit the product pages on our website for the most up-to-date product information

DIN PLUGS AND RECEPTACLES

STRAIGHT CORD PLUG with Extended Barrel



TYPE 12BL6M – TYPICAL

Male plug with ground key-rib. Nickel-plated diecast handle. Contact friction coupling. Flexible black strain relief. Heavy duty cable clamp.

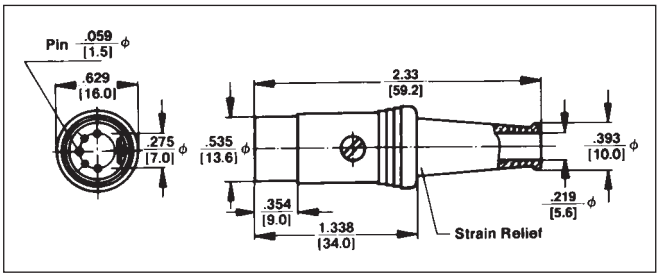

ORDERING INFORMATION

Part Number	Description	Pin Arrangement
◊03BL2M	2 pins with insulated switch actuator	1
05BL3M	3 pins at 180°	2
05BL5M	5 pins at 180°	5
09BL4M	4 pins at 210°	3
12BL5M	5 pins at 240°	4
12BL6M	6 pins at 240°	6
◊15BL7M	7 pins at 270°	7
◊15BL8M	8 pins at 270°	8

RIGHT-ANGLE CORD PLUG with 8 Position Barrel and 30° Lockring



TYPE 05YL5M – TYPICAL

Right-angle chassis hugging, male plug with flexible strain relief. Unique 8-position barrel gives you a choice of any one of eight different cable entry angles. ground key rib 30° turn lockring securely fastens two halves of connector.

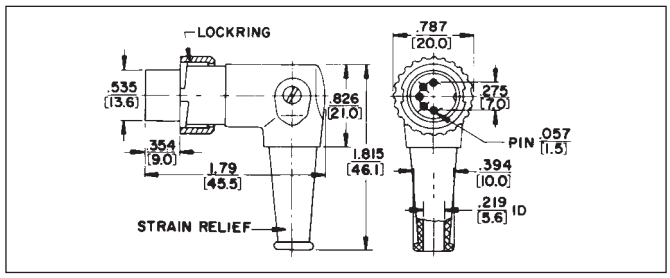

ORDERING INFORMATION

Part Number	Description	Pin Arrangement
◊05YL3M	3 pins at 180°	2
◊05YL5M	5 pins at 180°	5
◊09YL4M	4 pins at 210°	3
◊12YL5M	5 pins at 240°	4

RIGHT-ANGLE CORD PLUG with 8 Position Barrel



05DL5M shown

TYPE 05DL5M – TYPICAL

Right-angle chassis hugging, male plug with flexible black rubber strain relief. Unique 8-position barrel offers a choice of eight different cable entry angles.

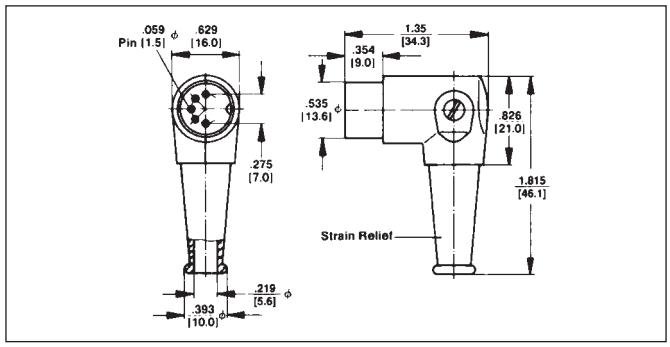

ORDERING INFORMATION

Part Number	Description	Pin Arrangement
◊05DL3M	3 pins at 180°	2
05DL5M	5 pins at 180°	5
◊09DL4M	4 pins at 210°	3
◊12DL5M	5 pins at 240°	4
◊12DL6M	6 pins at 240°	6
◊15DL7M	7 pins at 270°	7

◊ Available on special order only; contact Switchcraft for price and delivery.

DIMENSIONS ARE FOR REFERENCE ONLY Inch / (mm)

* Please visit the product pages on our website for the most up-to-date product information

DIN PLUGS AND RECEPTACLES (continued)

STRAIGHT CORD PLUG with Flush Socket Insert



TYPE 06AL5F – TYPICAL

Female plug with ground contact. Diecast metal shell, nickel-plated. Two contact plug, Part number 04AL2F includes a break circuit switch (1-B) which is opened by engaging the insulated switch actuator of the mating plug or receptacle. Flexible black strain relief.

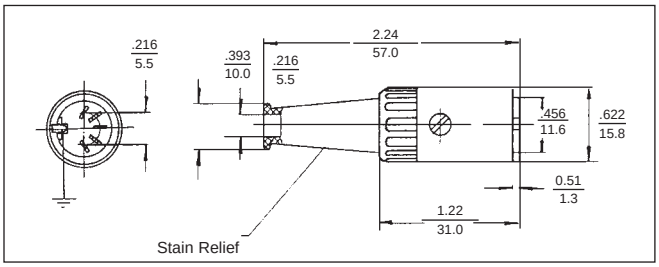

ORDERING INFORMATION

Part Number	Description	Contact Arrangement
06AL5F	5 contacts at 180°	F
◊13AL5F	5 contacts at 240°	E
◊13AL6F	6 contacts at 240°	G
◊15AL7F	7 contacts at 270°	H
15AL8F	8 contacts at 270°	N

STRAIGHT CORD PLUG with Lock Flange



TYPE 06EL5F – TYPICAL

Female plug with ground contact. Lock flange designed to accept 30° lockring. Insert screw firmly holds insert assembly in shell. Flexible black strain relief with 7/32" diameter cable entry. Heavy duty cable clamp.

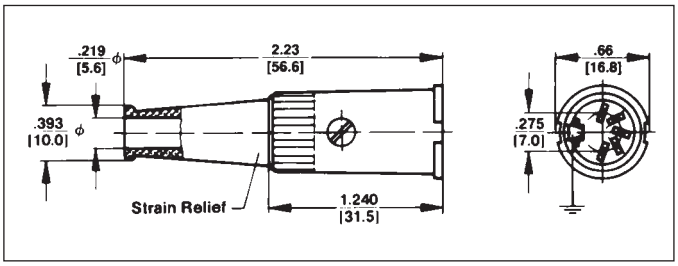

ORDERING INFORMATION

Part Number	Description	Contact Arrangement
◊06EL5F	5 contacts at 180°	F
13EL5F	5 contacts at 240°	E
◊15EL8F	8 contacts at 270°	N

RECEPTACLE with Extended Shell



TYPE 57KD3M – TYPICAL

Male receptacle, 3 pins, with ground key-rib. Diecast extended shell and flange for chassis or panel mounting. Turret terminals.

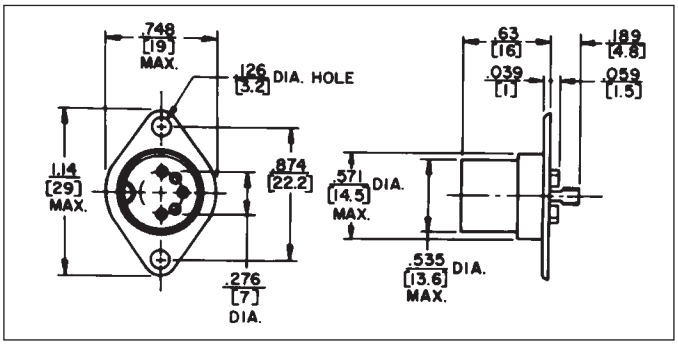

ORDERING INFORMATION

Part Number	Description	Pin Arrangement
57KD3M	3 pins at 180°	2

◊ Available on special order only; contact Switchcraft for price and delivery.

DIMENSIONS ARE FOR REFERENCE ONLY Inch (mm)

® Registered trademark of Switchcraft, Inc.
Note: Contact your Switchcraft Representative for price and delivery

* Please visit the product pages on our website for the most up-to-date product information

DIN RECEPTACLES (continued)

RECEPTACLE with Closed Circuit Switch



TYPE 59GB3F – TYPICAL

Unique 3 and 5 contact receptacles include a 1-B (closed circuit) switch which is mounted to drawn metal shell. Switch is actuated by the shell of the mating plug. Receptacles also provide complete shielding through the ground contact. Flared solder terminals.

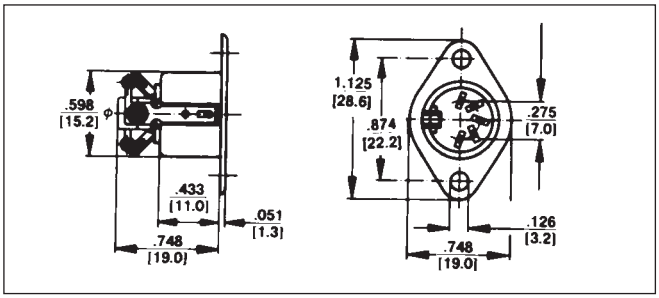

ORDERING INFORMATION

Part Number	Description	Contact Arrangement
◊59GB3F	3 contacts at 180° plus closed-circuit switch (Schematic #5)	B

◊ Available on special order only; contact Switchcraft for price and delivery.

RECEPTACLE for Chassis or Panel Mounting

For shielded and extended barrel plugs



TYPE 57GB5F – TYPICAL – FLARED SOLDER TERMINALS

Drawn metal recessed shell with mounting flange and ground contact. Available flared solder terminals. Part Number 58GB3F features two extra blanks in insert for proper mating (5 pins at 180°) plug where applications may require greater connector flexibility. Flared solder terminals standard.

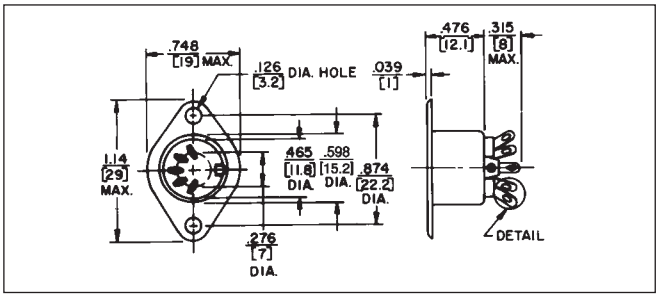

ORDERING INFORMATION

Part Number	Descriptions	Contact Arrangement
◊57GB3F	3 contacts at 180°	B
57GB5F	5 contacts at 180°	F
60GB4F	4 contacts at 210°	D
61GB5F	5 contacts at 240°	E
61GB6F	6 contacts at 240°	G
62GB7F	7 contacts at 270°	H
62GB8F	8 contacts at 270°	N

◊ Available on special order only; contact Switchcraft for price and delivery.

DIMENSIONS ARE FOR REFERENCE ONLY Inch (mm)

DIN RECEPTACLES (continued)

RECEPTACLE for Lockring Plug
Flared solder terminals on
Part Number 57HB5F



TYPE 61HA5F – TYPICAL

Female receptacle with ground contact. Chassis or panel mount. Diecast bayonet extension shell with mounting flange. Mates with all lockring plugs. such as Part Number 12CL5M. Part Number 55HA2F includes closed-circuit switch (1-B). All receptacles have straight solder terminals, except as noted.

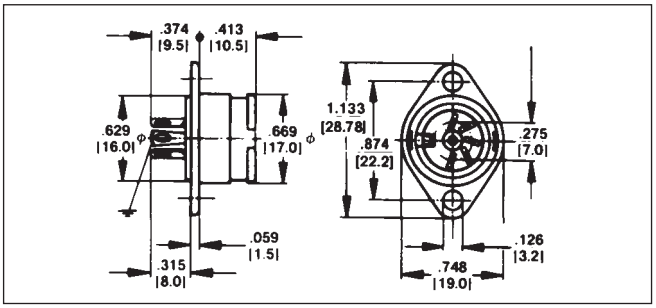

ORDERING INFORMATION

Part Number	Description	Pin Arrangement
◊55HA2F	2 contacts with closed-circuit switch (Schematic #4)	A
57HB3F*	3 contacts at 180°	B
57HB5F*	5 contacts at 180°	F
60HA4F	4 contacts at 210°	D
61HA5F	5 contacts at 240°	E
62HB7F*	7 contacts at 270°	H
62HB8F*	8 contacts at 270°	N

*Flared solder terminals
"A" in part number indicates straight terminal. (solder lug).
◊ Available on special order only; contact Switchcraft for price and delivery.

RECEPTACLE
for Printed Circuit Board Mounting



TYPE 57NC5F – TYPICAL

Mounts to printed circuit boards. Special PC type terminals "snap-in" precut boards. See drawing. Tubular metal shell with ground contact. Part Number 58NC3F mates with either 3 pin or 5 pin (at 180°) plugs because of its 2 extra blanks in the contact insert.

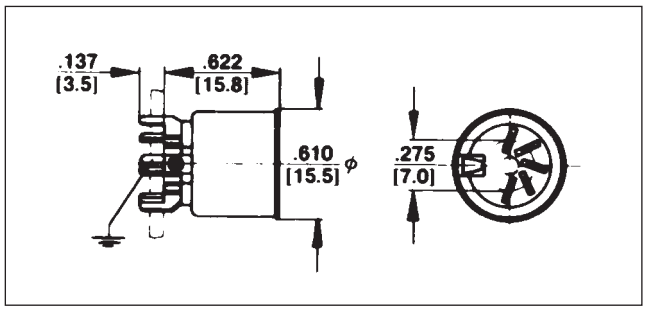

ORDERING INFORMATION

Part Number	Description	Contact Arrangement
57NC5F	5 contacts at 180°	F
◊58NC3F	3 contacts at 180° 2 extra blanks	C
◊60NC4F	4 contacts at 210°	D
61NC5F	5 contacts at 240°	E
◊62NC7F	7 contacts at 270°	H
62NC8F	8 contacts at 270°	N

"C" in part number indicates PC terminals.
◊ Available on special order only; contact Switchcraft for price and delivery.

DIMENSIONS ARE FOR REFERENCE ONLY Inch (mm)

® Registered trademark of Switchcraft, Inc.
Note: Contact your Switchcraft Representative for price and delivery

* Please visit the product pages on our website for the most up-to-date product information

RIGHT-ANGLE RECEPTACLE
for Printed Circuit Board Mounting



TYPE 57PC5F–TYPICAL
Mounts to PC boards. Plugs connect at right-angle to mounting surface. Part Number 57PC3F mates with either 3 or 5 pin (at 180°) plugs because of two extra blanks in contact insert. ground contact provides complete shielding through receptacles.

ORDERING INFORMATION

Part Number	Description	Contact Arrangement
◊57PC3F	3 contacts at 180°	B
57PC5F	5 contacts at 180°	F
◊60PC4F	4 contacts at 210°	D
61PC5F	5 contacts at 240°	E
61PC6F	6 contacts at 240°	G
◊62PC7F	7 contacts at 270°	H
62PC8F	8 contacts at 270°	N

◊ Available on special order only; contact Switchcraft for price and delivery.

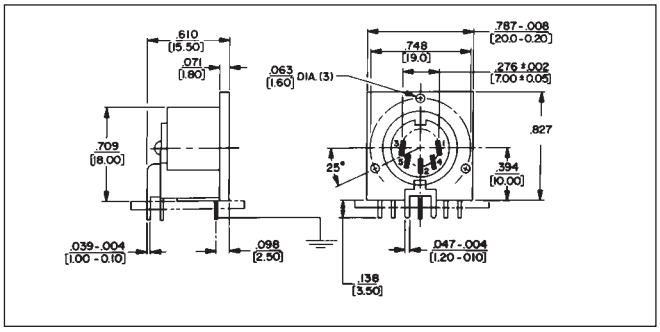

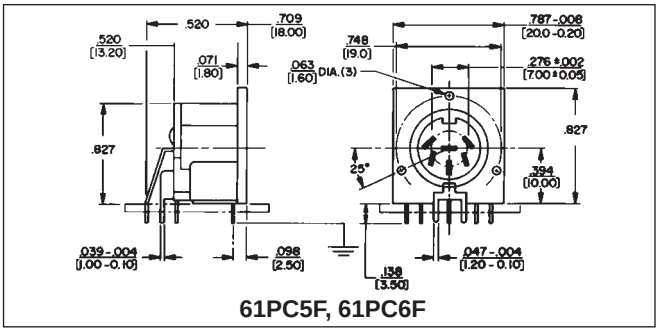

61PC5F, 61PC6F

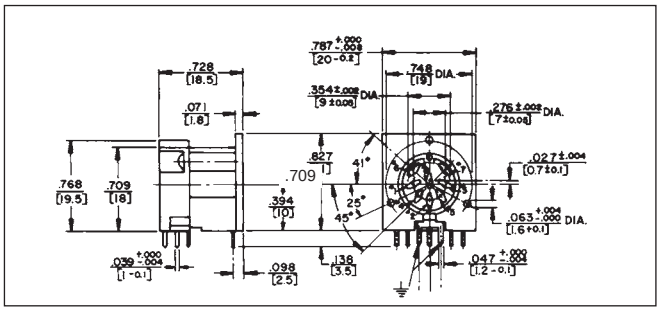

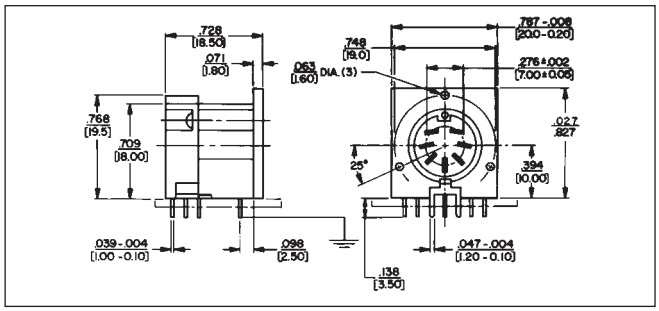

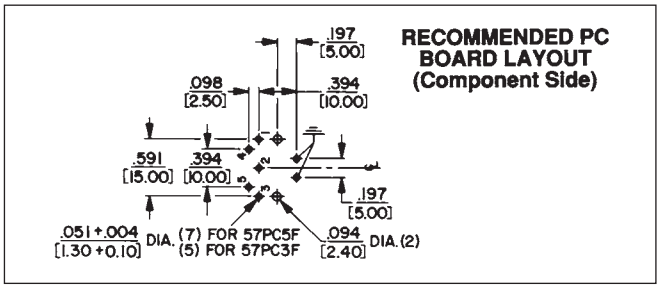

RECOMMENDED PC BOARD LAYOUT (Component Side)

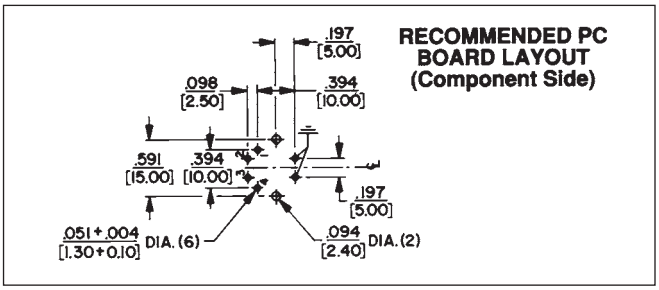

RECOMMENDED PC BOARD LAYOUT (Component Side)

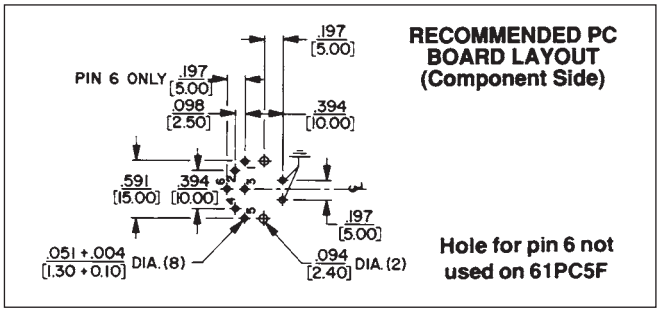

RECOMMENDED PC BOARD LAYOUT (Component Side)

Hole for pin 6 not used on 61PC5F

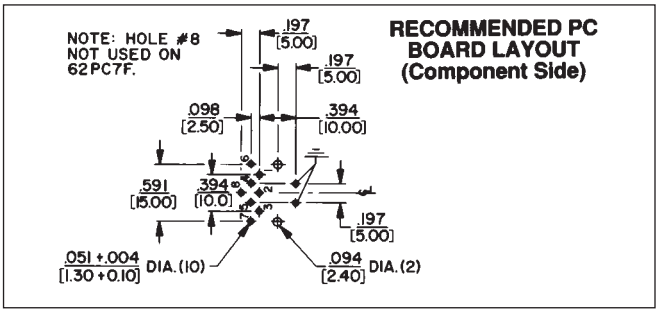

RECOMMENDED PC BOARD LAYOUT (Component Side)

DIMENSIONS ARE FOR REFERENCE ONLY Inch (mm)

* Please visit the product pages on our website for the most up-to-date product information

Part Number	Description	Contact Arrangement
◊57PC3FS	3 contacts at 180°	B
57PC5FS	5 contacts at 180°	F
◊60PC4FS	4 contacts at 210°	D
61PC5FS	5 contacts at 240°	E
61PC6FS	6 contacts at 240°	G
62PC7FS	7 contacts at 270°	H
62PC8FS	8 contacts at 270°	N

SPECIFYING NOTE: Another series of receptacles with a trimmed metal flange .052" (1.32 mm) below housing top is available. Replace suffix "S" with "T" in part numbers above to specify these receptacles or contact Switchcraft.
Mounting: #2 or #3 self-tapping screw.
◊ Available on special order only; contact Switchcraft for price and delivery.

RIGHT-ANGLE SHIELDED RECEPTACLE
for printed circuit board mounting



TYPE 60PC4FS–TYPICAL
Similar to 57PC5F – Typical, except flange surrounding face of insert is metal to provide through-grounding between plug and receptacle and to potential panel/chassis for common grounding.

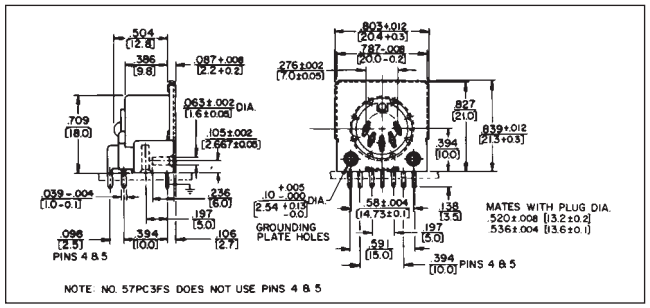

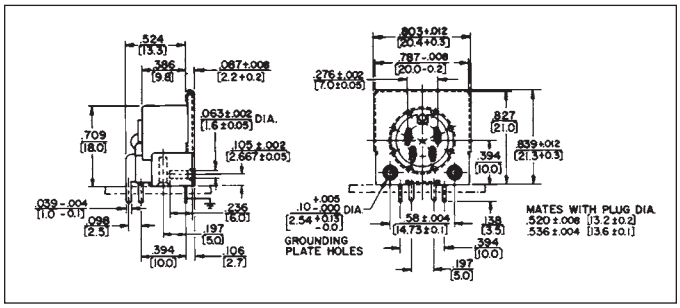

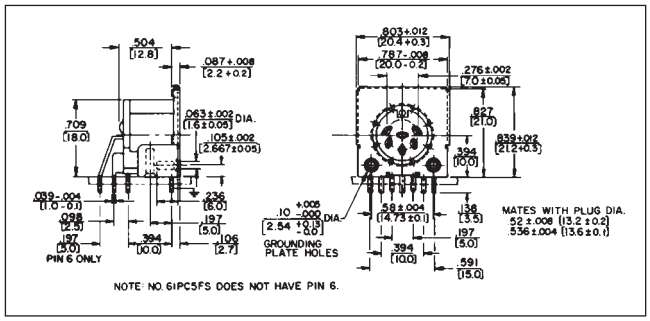

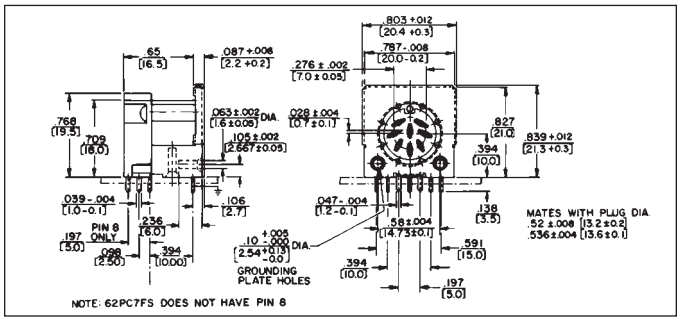

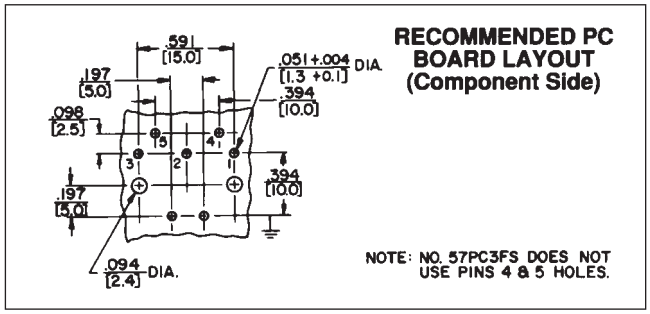

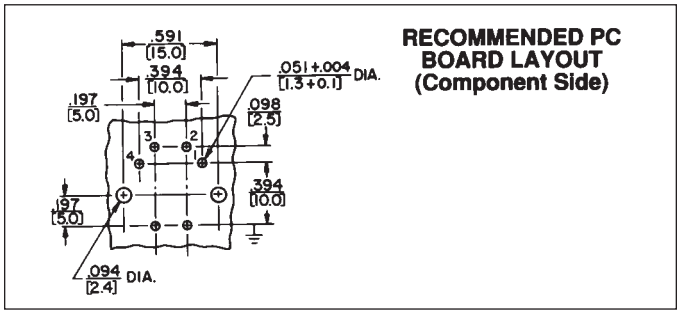

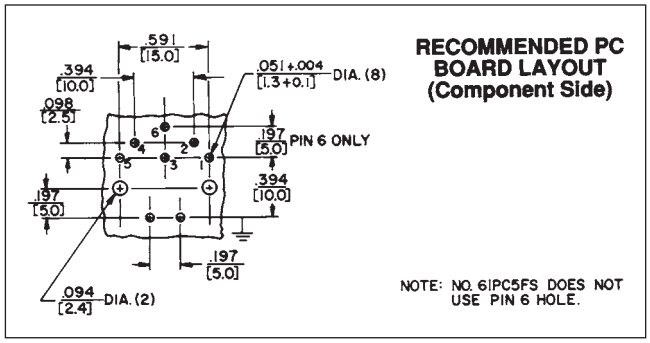

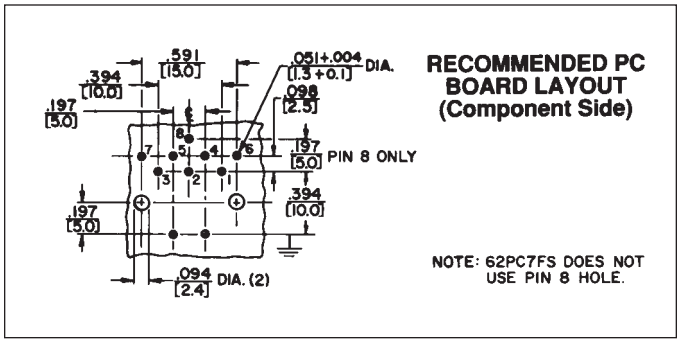

DIMENSIONS ARE FOR REFERENCE ONLY Inch (mm)

® Registered trademark of Switchcraft, Inc.
Note: Contact your Switchcraft Representative for price and delivery

* Please visit the product pages on our website for the most up-to-date product information

DIN RECEPTACLES (continued)

MINI-DIN RIGHT-ANGLE RECEPTACLES

Miniature DIN right-angle connectors are designed for personal computer, video and data communications, medical and instrumentation equipment and systems.

RIGHT-ANGLE, PC MOUNT RECEPTACLES

Available with 3 through 8 contacts, female only, receptacles also have a standard (and separate) ground contact system. Ground terminal can be straight or snap-in type. Snap-in terminals are bifurcated to assure tight hold down on PC board before, during and after soldering. Solder wicking around the terminal strengthens the connection. Additionally, PC terminals are staggered to assure more "hold down" capability during soldering.

Receptacle/plug retention is "friction" type, and a separate outer shield can be specified.

Series SMD*FRAX10: 3 through 8 contacts, female, right-angle PC mount, straight ground terminal, and no outer shield.

Series SMD*FRAX20: Same as SMD*FRAX10, except with bifurcated snap-in ground terminal.

Series SMD*FRAX11: 3 through 8 contacts, female, right-angle PC mount, straight ground terminal, and outer shield.

Series SMD*FRAX21: Same as SMD*FRAX11, except with snap-in ground terminal.

Series DMD*FRAX111: Dual stacked miniature DIN connectors, available in 4, 5, 6, and 8 contacts. Shielded and non-shielded versions available.

Dimensions: .552" (14 mm) wide x .502" (12.8 mm maximum depth x .642" (16.3 mm) height, including terminals.

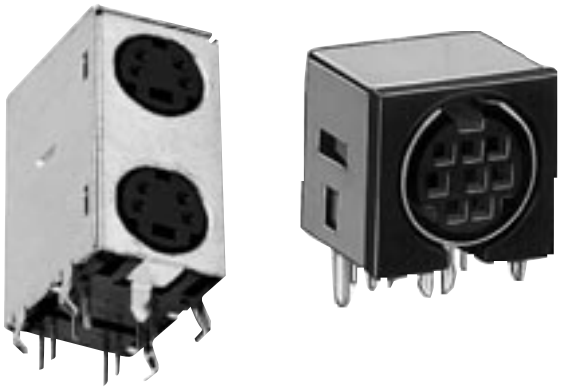

SPECIFICATIONS

Ratings: 1A, 100 VAC; 2A, 12 VDC.
Insulation Resistance: 50 MΩ minimum
Dielectric Strength: 250 VDC for 1 minute.
Contact Resistance: 30 mΩ maximum
Insertion/Withdrawal Force: 0.8 to 5 kilograms
Withdrawal Force: 0.8 to 4 kilograms
Contacts/Terminals: Copper alloy, silver or gold-plated
Ground Terminal: Copper alloy, nickel-plated.
External Shield: Copper alloy, solder-coated.
Body: Black molded thermoplastic, UL 94V-0.

MINI-DIN RIGHT-ANGLE RECEPTACLES PART NUMBER SCHEME

Series	Contacts	Style	Shield/Ground	Optional Mounting Screw Hole
SMD-Single **DMD-Dual**	Insert#: 3-8	FRA	110: Unshielded, no snap-in ground 111: Shielded, no snap-in ground 120: Unshielded, snap-in ground 121: Shielded, snap-in ground	A: Adds screw hole Blank: None

Note: Dual available in 4,5,6, and 8 only
Note: Snap-in ground available on single only
Note: Optional mounting screw hole available on dual only
Note: Special order only, contact factory for details

CONTACT ARRANGEMENTS
(viewed from contact side)

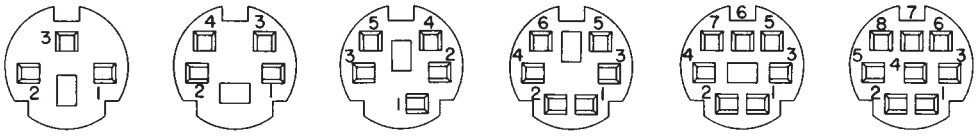

DIMENSIONS ARE FOR REFERENCE ONLY Inch (mm)

* Please visit the product pages on our website for the most up-to-date product information

DIN RECEPTACLES (continued)

SMD SERIES

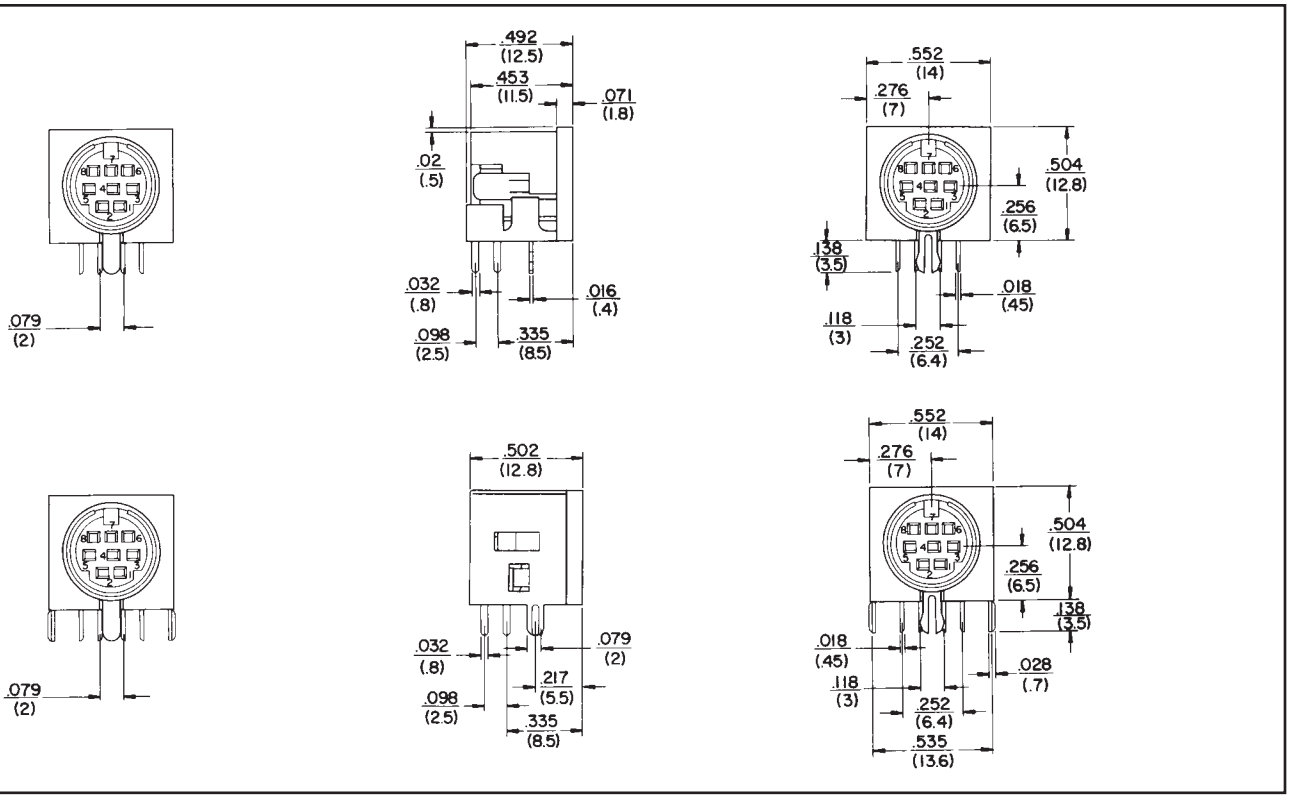

RECOMMENDED PC BOARD LAYOUTS (Viewed from component side)

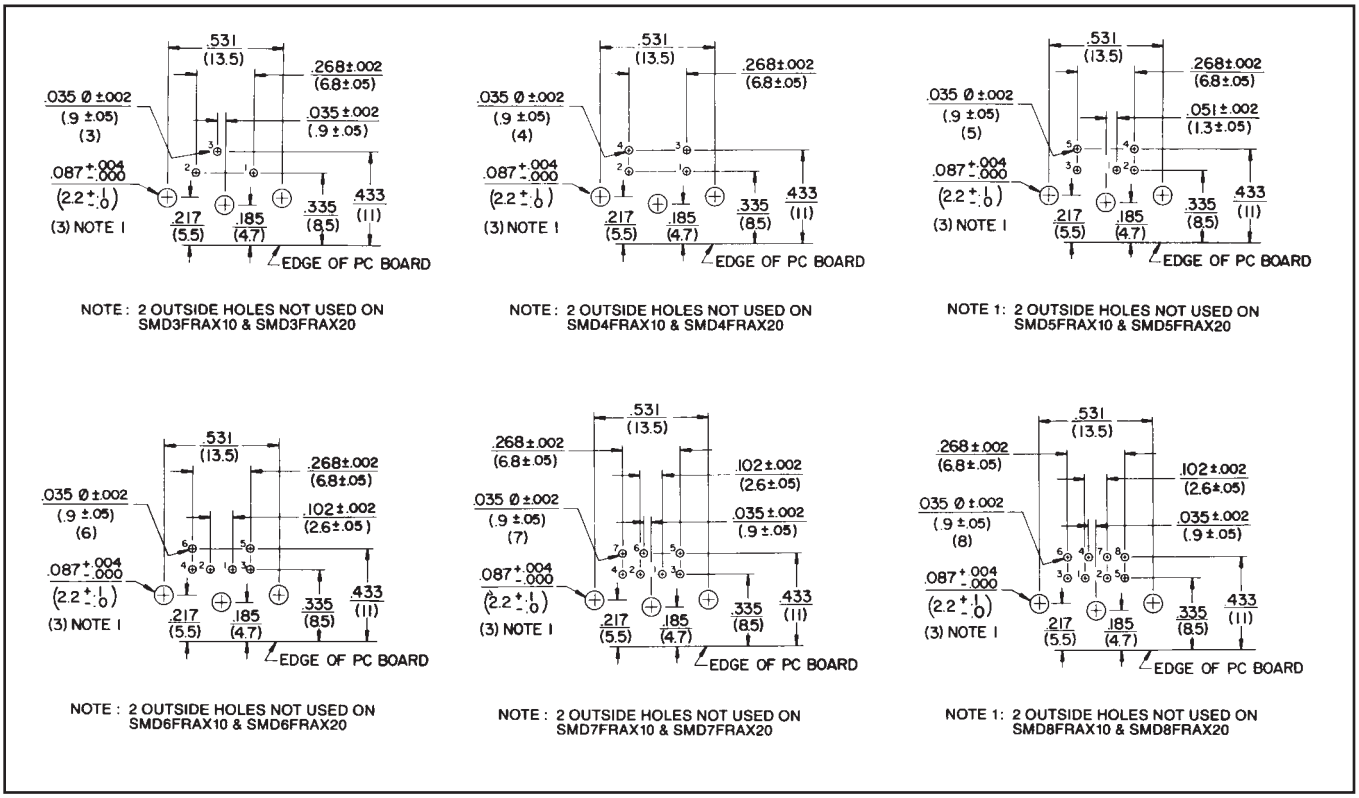

DIMENSIONS ARE FOR REFERENCE ONLY Inch (mm)

® Registered trademark of Switchcraft, Inc.
Note: Contact your Switchcraft Representative for price and delivery

* Please visit the product pages on our website for the most up-to-date product information

DIN RECEPTACLES (continued)

DMD SERIES

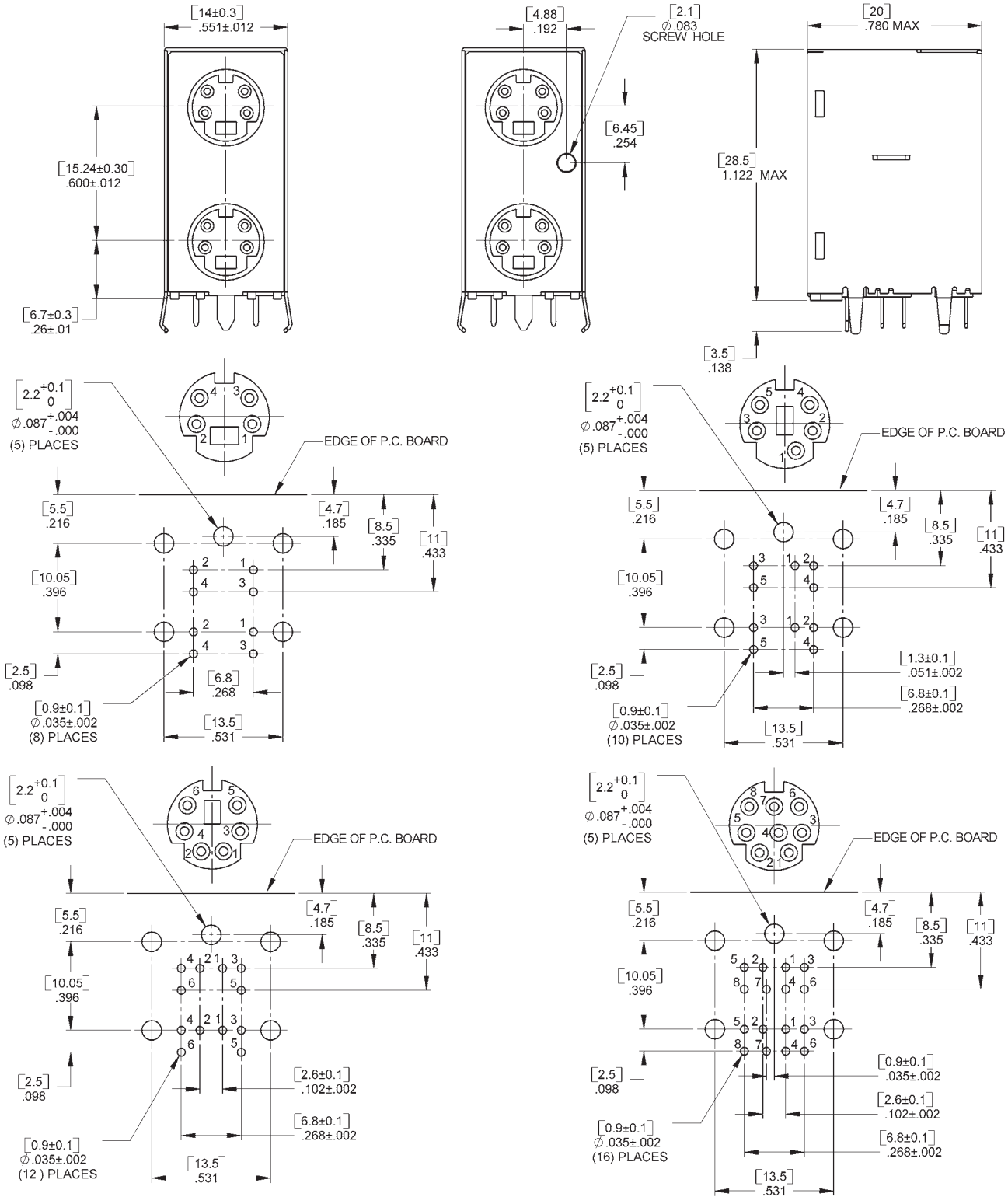

DIMENSIONS ARE FOR REFERENCE ONLY Inch (mm)

* Please visit the product pages on our website for the most up-to-date product information

SINGLE AND DUAL STACKED USB CONNECTORS

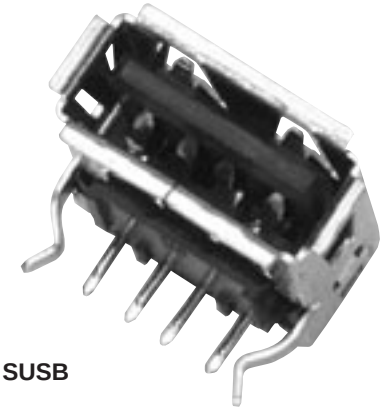

SUSB

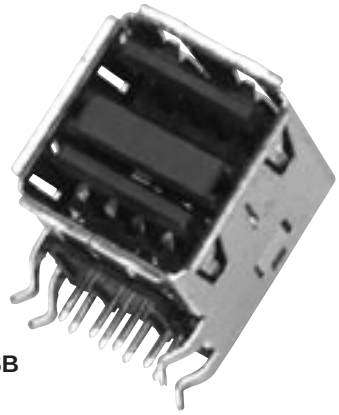

DUSB

Switchcraft introduces single and dual USB connectors. The USB connectors are fast becoming the industry standard for plug and play connectivity between PCs and their peripherals. The DUSB and USB connectors are RAPC mounted, with kinked terminals for snap-in placement to the PC board. Both meet all Universal Serial Bus standards.

FEATURES AND BENEFITS

- Snap-in terminals facilitate wave soldering
- Shielded for reduced EMI/RFI emissions
- Dual stacked version increases PC board density

APPLICATIONS

- Personal Computer
- Data Communications
- Medical Equipment
- Test Equipment
- Instrumentation

SPECIFICATIONS

GENERAL

Voltage Rating: 30 VAC (rms) Max.
Current Rating: Signal application only, 1A Max. per contact
Contact Resistance: 25m ohms Max. initial
Temperature Rating: 32°F to 104°F (0°C to 40°C)
Insertion Force: 7.7 lbs Max. (3.5 kg Max.)
Withdrawal Force: 0.8 lb Min. (0.4 kg Min.)
Life: 1500 cycles

MATERIALS

Body: Black, molded thermoplastic, UL 94V-0
Shell: Copper alloy, tin plated
Contact Terminal: Copper alloy, gold plating in mating area, tin plating on solder tails, all over nickel plating.

Part Number	Description
SUSB Single	USB Connector
DUSB Dual Stacked	USB Connector

Note: Special order only, contact factory for details.

DIMENSIONS ARE FOR REFERENCE ONLY Inch (mm)

® Registered trademark of Switchcraft, Inc.
Note: Contact your Switchcraft Representative for price and delivery

* Please visit the product pages on our website for the most up-to-date product information

SINGLE AND DUAL STACKED USB CONNECTORS (continued)

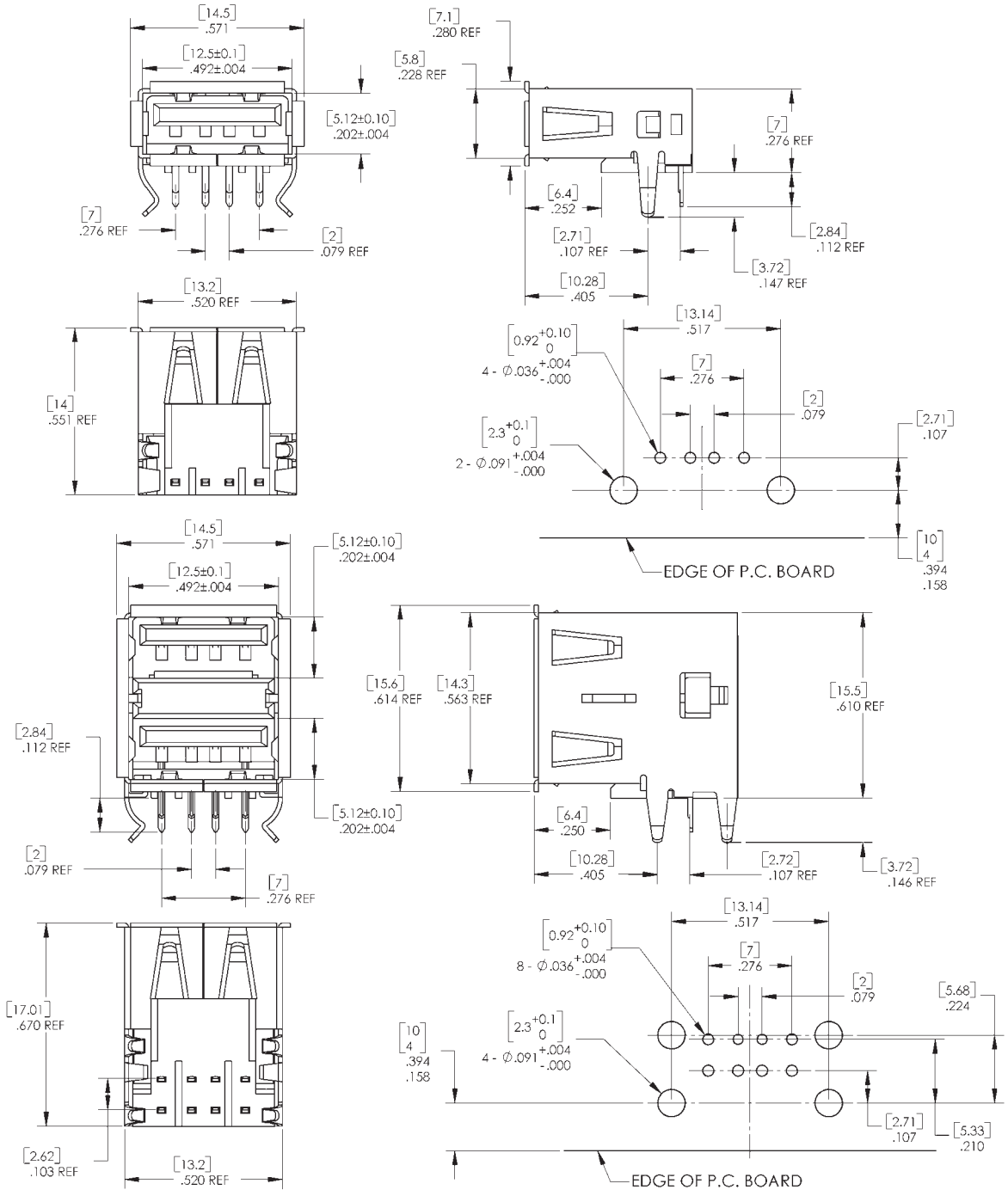

DIMENSIONS ARE FOR REFERENCE ONLY Inch (mm)

* Please visit the product pages on our website for the most up-to-date product information

IEEE 1394 FIREWIRE CONNECTORS

1394RAPC



1394SMT

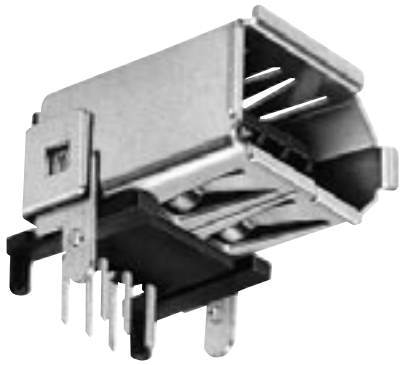

Switchcraft introduces both right angle PC and surface mount versions of IEEE 1394 Firewire connectors. The Firewire connectors are becoming another connector standard used in the upcoming multimedia/computer market. The connectors meet IEEE 1394R-4006N Series standards.

FEATURES AND BENEFITS

- Shielded housings to reduce EMI/RFI emissions
- Mounting posts add stability for wave soldering
- Low profile requires less space

APPLICATIONS

- Multimedia
- Video
- Personal Computers
- Computer Peripherals

SPECIFICATIONS

GENERAL

Voltage Rating: 40 VAC
Current Rating: 1.5A
Contact Resistance: 30m Ohms Max.
Temperature Rating: -55°C to +105°C
Insertion Force: 6.0 lbs. Max.
Withdrawal Force: 4.4 lbs. Min.
Lifecycles: 1,500 Min.

Part Number	Description
1394RAPC	IEEE 1394 RAPC
1394SMT	IEEE 1394 SMT

Note: Special order only, contact factory for details.

DIMENSIONS ARE FOR REFERENCE ONLY Inch (mm)

® Registered trademark of Switchcraft, Inc.
Note: Contact your Switchcraft Representative for price and delivery

* Please visit the product pages on our website for the most up-to-date product information

IEEE 1394 FIREWIRE CONNECTORS (continued)

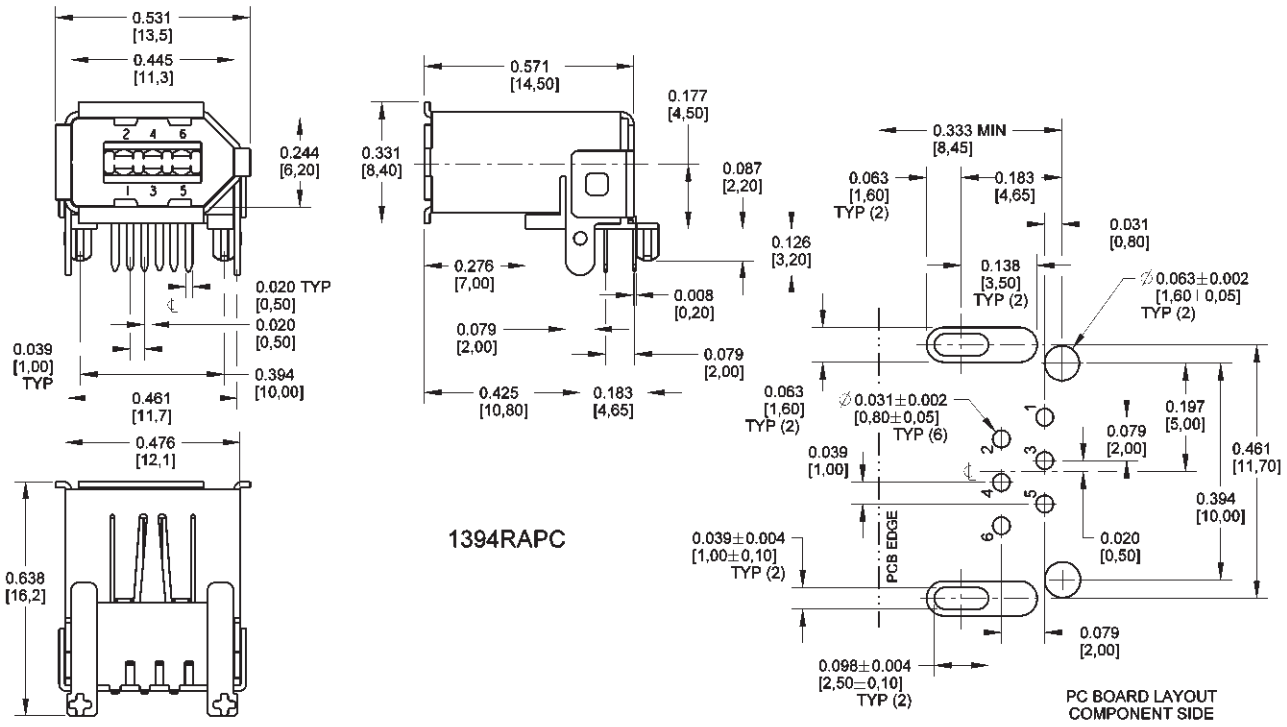

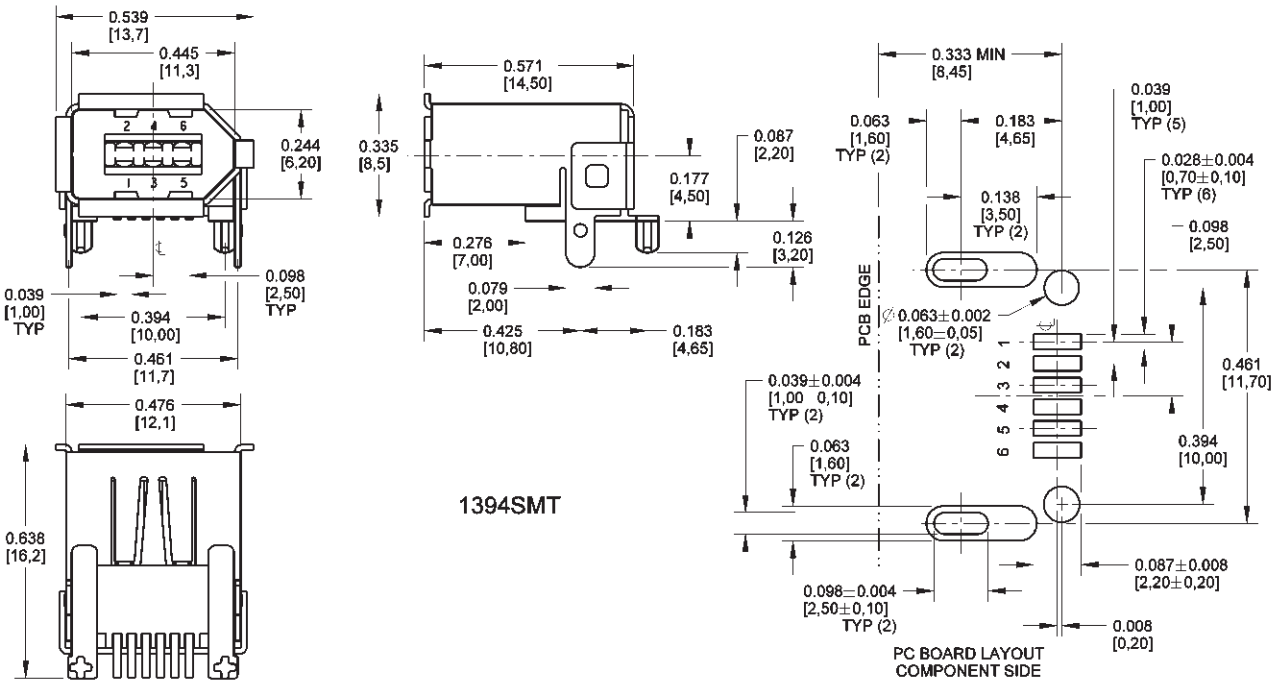

DIMENSIONS ARE FOR REFERENCE ONLY Inch (mm)

* Please visit the product pages on our website for the most up-to-date product information

SLIM-LINE CONNECTORS

TYPICAL SL172F REAR MOUNT RECEPTACLE

HEX NUT
Used in mounting rear or front of panel receptacles (supplied standard).

THREADED BUSHING
Coupler ring on mating plug threads onto bushing and keeps plug/receptacle from working loose.

FEMALE INSERT*
Rugged molded black plastic barrel construction; positively keyed to housing.

FLATTED BARREL
Keys to inside flat on male insert. Polarizes the connection. Correct mating every time.

LOCK WASHER
Prevents rear or front of panel receptacle from working loose when installed (supplied standard).



REAR OF PANEL MOUNT RECEPTACLE
Tough, plated diecast housing with non-reflecting matte finish. Mounts in D-shape (self-keyed) hole. Other receptacle types are: Front of Panel Mount and Flange Mount.

FLAT WASHER
Used in mounting rear and front of panel receptacles (supplied standard).

CONTACT TERMINALS
Rugged solder lug type; copper alloy plated

CONTACTS
Held captive in insert. Excellent pin retention force. Copper alloy plated.

TYPICAL SL402M CORD PLUG

PIN TERMINALS
Large, rugged plated copper alloy; solder cup type.

CABLE CLAMP
Extra large and rugged clamp protects soldered terminations (also facilitates grounding/shielding feature when used on receptacle insert).

CORD PLUG HOUSING
Precision-drawn, plated copper alloy with non-glare matte finish.

STRAIN RELIEF SPRING
Provides positive relief from cable wear at opening in plug housing.



MALE INSERT*
Rugged black plastic; keyed to housing. Durable plated copper alloy pins are 100% molded-in.

***NOTE:** Insert fits both plug and receptacle housings; can be interchanged at any time.

LATCH SPRING
Captive spring locks insert to housing

COUPLER RING
Held captive on plug; non-reflective matte finish. Threads onto receptacle bushing (or mating plug) to hold connector halves secure from accidental separation.

LATCH DETENT
Latch spring on insert seats in detent to hold insert firmly in housing.

DESIGN FEATURES

Slim-Line® Audio Connectors are a unique series of premium quality connectors featuring interchangeable inserts which allow any plug or receptacle to be male or female. This versatility is valuable in a wide variety of applications: microphones, public address systems, 2-way, CB, ham, and marine radios, audio-visual systems, industrial control and instrumentation, broadcast, security and medical electronics.

APPLICATIONS

Retrofit/Replacement; Slim Line Cord Plug **(SL405M)** and Receptacle **(SL105F)** are recommended as a possible choice to replace Switchcraft/DIN plug **(12CL5M)** and receptacle **(55HA5F)**. Receptacle **SL105F** fits the same mounting holes as the Switchcraft/DIN receptacle.

Four pin/contact Slim-Line plugs and receptacles are recommended as direct replacements for the original Slim-Line connectors, Series **2504**, and for the molded version of the Slim-Line connector, **Style ST34**.

RECEPTACLES

Three types of receptacles can be specified:

1. Flange mount (Series SL10)
2. Rear of panel mount (Series SL17)

Receptacles can be specified with same male and female insert combinations as cord plugs. For rear and front of panel mounting types, hex nuts, lock washers, and flat washers are supplied. For flange mount receptacles, mounting holes in flange accept #4 machine screw or .125" (3.18 mm) diameter rivet.

CORD PLUGS

Miniature Cord Plugs feature nickel-plated copper alloy housings with matte finish on exterior parts. Plugs may be specified with inserts having 2-, 3-, 4- and 5-pins (male) or contacts (female), or 2-, 3-, or 4-contact receptacles having shunts (N.C.) on two contacts (special order only). Extra large cable clamp protects against pulling and twisting strains on terminations. Strain relief spring protects against excess cable wear at entry point at rear of housing. Cord plugs accept cables up to .281" (7.14 mm) diameter. Captive coupler ring feature **(Series SL40)** provides secure mechanical connection and protection against shock and vibration between cord plugs and mating plug **(Series SL41)** or receptacle.

DIMENSIONS ARE FOR REFERENCE ONLY $\frac{\text{Inch}}{(\text{mm})}$

® Registered trademark of Switchcraft, Inc.
Note: Contact your Switchcraft Representative for price and delivery

* Please visit the product pages on our website for the most up-to-date product information

SLIM-LINE CONNECTORS (continued)

INSERTS

Inserts are molded of high-strength plastic, and are completely interchangeable between plug and receptacle housings at any time. Inserts are keyed to housings, and male and female inserts are polarized to prevent mismating.

PIN/CONTACT CONFIGURATIONS:

Pins	Contacts	Contacts (Shunts)
2	2	2 (N.C. Shunt on each contact)
3	3	3 (N.C. Shunts on contacts 1 and 3)
4	4	4 (N.C. Shunts on contacts 1 and 4)
5	5	–

◊Add an "S" to end of part number for shunts. Special order only.

Insert is installed from front, and the captive latch spring locks insert to housing. To remove insert from receptacle, depress latch spring and apply pressure to rear of insert (**DO NOT APPLY PRESSURE TO TERMINALS**). On cord plugs, depress latch spring and press in on strain relief to free the insert.

GROUNDING/SHIELDING

Housings shield internal connections and provide ground (common) connections without using a pin/contact. On cord plugs, ground lead (or shield) is connected to cable clamp. For receptacles Cable Clamp, **SL04** is ordered separately as a special and installed. If desired, ground/shield connection may then be made to clamp. When mated, a continuous, shielded, low resistance path is made through the connector.

Part Number	Item
◊**SL01**	Hex Nut
◊**SL02**	Lockwasher
◊**SL03**	Flat Washer
◊**SL04**	Cable Clamp
◊**SL05**	Strain Relief Spring

SPECIFICATIONS

MATERIALS

Receptacle Housings: Die-cast zinc, nickel-plated.
Cord Plug Housings: Copper alloy, nickel-plated.
Inserts: Glass-reinforced thermoplastic. UL 94 V-0.
Female Contacts: Copper alloy, silver-plated, solder lug type.
Pins: Copper alloy, silver-plated, solder cup type.
Cable Clamp, Strain Relief, and Mounting Hardware: Steel, plated. **Latch**: Steel, plated.

ELECTRICAL

Current Rating: 5 Amps carry only.

MOUNTING

Cord Plugs: Plugs accept cables up to .281" (7.14 mm) diameter.

Receptacles: Flange mount type mounts in panels or chassis up to .188" (4.78 mm) thick. .125" (3.18 mm) diameter holes accept #4 machine screws or .125" (3.18 mm) diameter rivets. Rear and front of panel types mount in "D"-shaped hole in panels or chassis up to .219" (5.56 mm) thick. Hex nut (**SL01**), lockwasher (**SL02**), and flat washer (**SL03**) are supplied for mounting.

CABLE CLAMP AND STRAIN RELIEF

Cord Plugs: Plugs are supplied with rugged cable clamps and strain relief springs. Cable clamp serves two valuable functions: to firmly hold cable to prevent pulling or twisting strains on soldered terminations, and as a connecting point for ground (common) or shield when grounding/shielding through the connector is required.

Receptacles: Receptacles are not supplied standard with cable clamp for strain relief. If grounding/shielding feature is desired, separate Cable Clamp, **SL04**, is installed on receptacle insert.

MOUNTING HARDWARE

(Supplied with Series SL17 and SL18 receptacles)

SLIM-LINE CONNECTOR PART NUMBERING SYSTEM

SERIES	HOUSING TYPE	Number of Contacts	Gender	Options
SL SLIM-LINE	— NONE	2	M MALE	S WITH SHUNTS
	10 RECEPTACLE, FLANGE MOUNT	3	F FEMALE	
	17 RECEPTACLE, REAR MOUNT	4		
	18 RECEPTACLE, FRONT MOUNT	5		
	40 CORD PLUG WITH COUPLING RING			
	41 CORD PLUG WITHOUT COUPLING RING			

PIN AND CONTACT ARRANGEMENTS

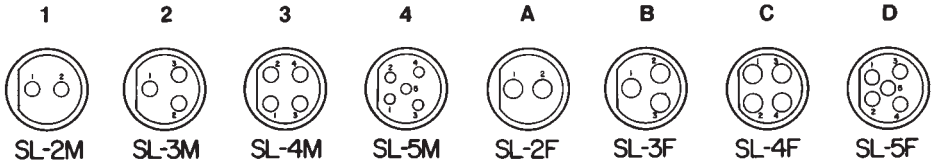

SCHEMATIC CIRCUITS



DIMENSIONS ARE FOR REFERENCE ONLY Inch (mm)

SLIM-LINE CONNECTORS (continued)

SL40 CORD PLUG with Coupler Ring

SL402M (typical)



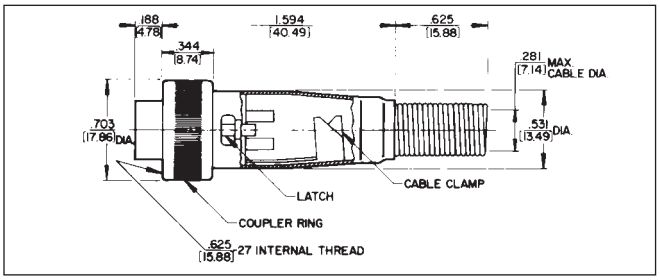

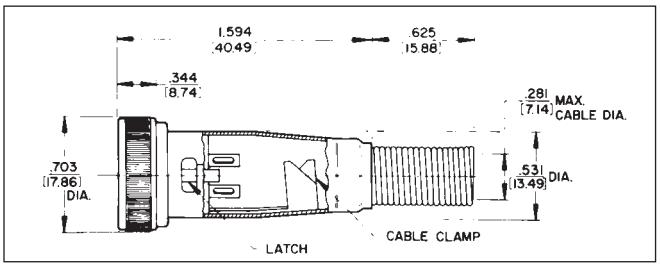

Non-reflective metal shell; coupling ring; 2 through 5 pins (male) or 2 through 5 contacts (female). Also 2-, 3- and 4-contact inserts with two shunted (N.C.) contacts. Efficient cable clamp and strain relief.

SL41 CORD PLUG without Coupler Ring

SL413F (typical)



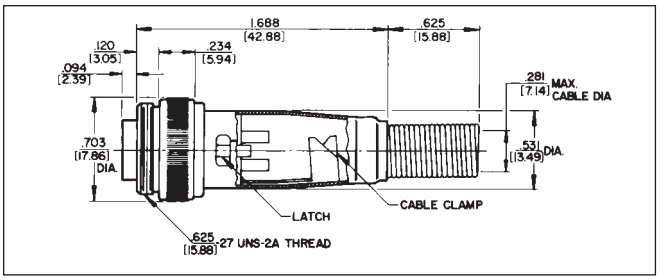

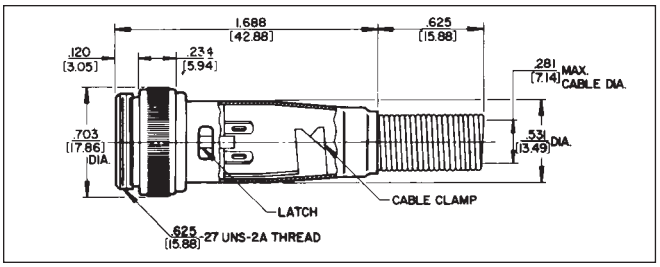

Non-reflective metal shell; 2 through 5 pins (male) or 2 through 5 contacts (female). Also 2-, 3- and 4-contact inserts with two shunted (N.C.) contacts. Efficient cable clamp and strain relief.

SL MALE CORD PLUGS

Part Number	Pins	Pin Arrangements
SL402M	2	1
SL403M	3	2
SL404M	4	3
SL405M	5	4

SL MALE CORD PLUGS

Part Number	Pins	Pin Arrangements
SL413M	3	2
SL414M	4	3
SL415M	5	4

SL FEMALE CORD PLUGS

Part Number	Contact	Contact Arrangements
SL402F	2	A
SL403F	3	B
SL404F	4	C
SL405F	5	D

SL FEMALE CORD PLUGS

Part Number	Contacts	Contact Arrangements
SL412F	2	A
SL413F	3	B
SL414F	4	C
SL415F	5	D

STRAIN RELIEF SPRING

Strain Relief Spring
Part Number SL05



◊ Available on special order only; contact Switchcraft for price and delivery.

DIMENSIONS ARE FOR REFERENCE ONLY Inch (mm)

® Registered trademark of Switchcraft, Inc.
Note: Contact your Switchcraft Representative for price and delivery

* Please visit the product pages on our website for the most up-to-date product information

SLIM-LINE CONNECTORS (continued)

SL10 RECEPTACLES
Flange Mount



SL104F (typical)

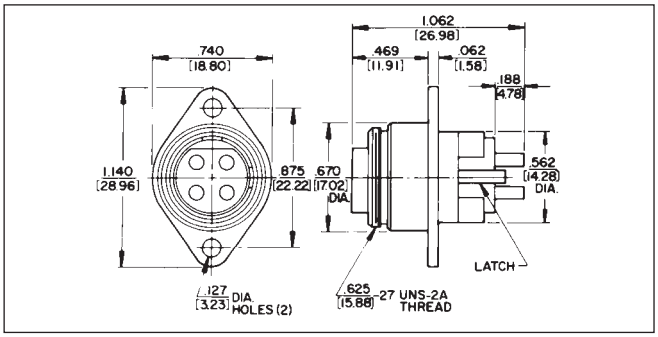

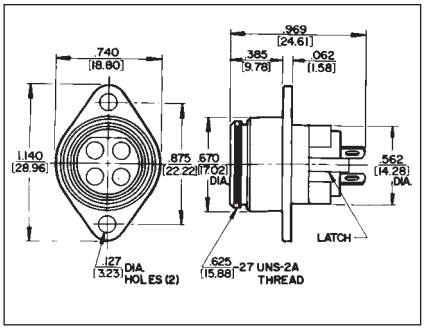

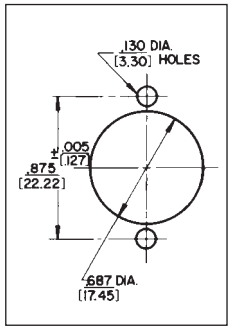

Flange mounted; 2 through 5 pins (male) or 2 through 5 contacts (female). Also 2-, 3- and 4-contact inserts with 2 shunted (N.C.) contacts.

SL17 RECEPTACLES
Rear of Panel Mount



SL175F (typical)

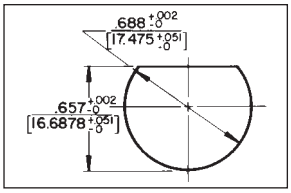

SL17 and SL18 Receptacles
Non-turn panel cut-out

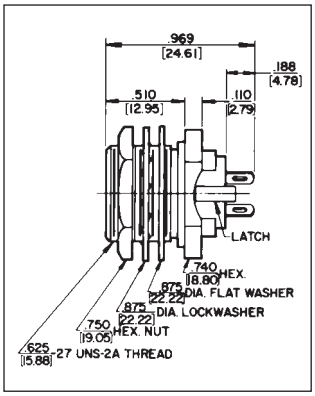

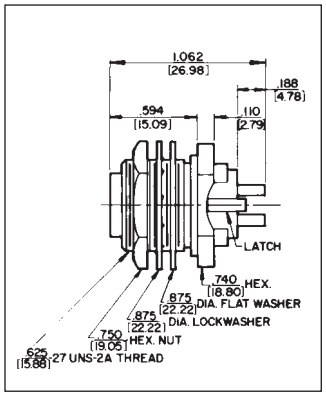

Rear of panel mount; 2 through 5 pins (male) or 2 through 5 contacts (female). Also 2-, 3- and 4-contact inserts with 2 shunted (N.C.) contacts. Mounting locknut **(Part Number SL01)**, lock washer **(Part Number SL02)**, and flat washer **(Part Number SL03)** supplied.

SL MALE RECEPTACLES

Part Number	Pins	Pin Arrangements
SL102M	2	1
SL103M	3	2
SL104M	4	3
SL105M	5	4

SL MALE RECEPTACLES

Part Number	Pins	Pin Arrangements
SL173M	3	2
SL174M	4	3
SL175M	5	4

SL FEMALE RECEPTACLES

Part Number	Contacts	Contact Arrangements
SL102F	2	A
SL103F	3	B
SL104F	4	C
SL105F	5	D

SL FEMALE RECEPTACLES

Part Number	Contacts	Contact Arrangements
SL172F	2	A
SL173F	3	B
SL174F	4	C
SL175F	5	D

◊ Available on special order only; contact Switchcraft for price and delivery.

DIMENSIONS ARE FOR REFERENCE ONLY Inch (mm)

SLIM-LINE CONNECTORS (continued)

SL18 RECEPTACLES
Front of Panel Mount



SL183FS (typical)

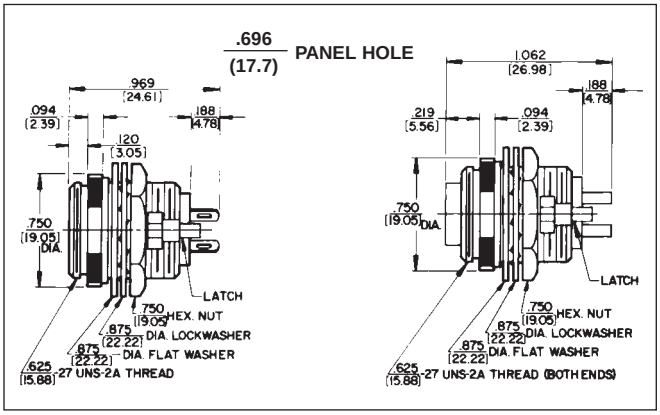

Front of panel mount; 2 through 5 pins (male) or 2 through 5 contacts (female). Also 2-, 3- and 4-contact insert with 3 shunted (N.C.) contacts. Mounting locknut **(Part Number SL01)**, lockwasher **(Part Number SL02)**, and flat washer **(Part Number SL03)** supplied.

SL MALE RECEPTACLES

Part Number	Pins	Pin Arrangements
SL182M	2	1
SL183M	3	2
SL184M	4	3
SL185M	5	4

SL FEMALE RECEPTACLES

Part Number	Contacts	Contact Arrangements
SL182F	2	A
SL183F	3	B
SL184F	4	C
SL185F	5	D

INSTALLING CABLE CLAMP ON INSERT

To install cable clamp on any insert:
1. Position insert approximately as shown in the diagram.
2. Hold clamp at approximately 30° angle (as shown). Place tip of clamp center finger into slot under molded ring “A”. Note position of notch on insert in relation to slot.
3. Press center finger forward into slot and reduce angle of clamp until clamp shoulders seat just ahead of molded barrier on rear of insert “B”.

Cable Clamp SL04

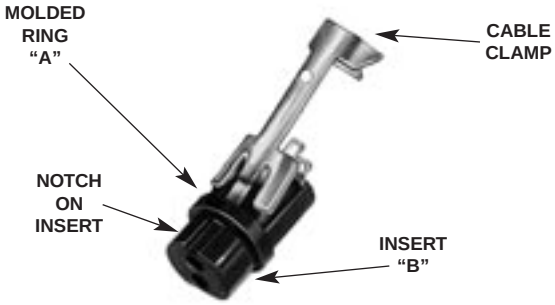

DIMENSIONS ARE FOR REFERENCE ONLY Inch (mm)

® Registered trademark of Switchcraft, Inc.
Note: Contact your Switchcraft Representative for price and delivery

* Please visit the product pages on our website for the most up-to-date product information

CB CONNECTORS

Miniature 3 and 4 circuit connectors for microphone connections in mobile/communications equipment. Cord plug has silver-plated copper alloy contacts, large cable clamp, and strain relief spring.

CB-3F 3-contact female cord plug. Knurled coupling ring has internal metric M16x1 thread. Solder lug terminals accept wires up to #18 AWG. Accommodates cables up to .281" (7.14 mm) diameter.

CB-4F Same as CB-3F. except 4 contacts.



CB-3F

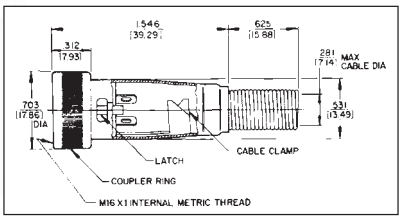

CB-3M 3-pin male receptacle. Housing keys insert of mating plug; bushing with external M16x1 metric thread mates with coupling ring on plug. Cup-type terminals accept wires up to #16 AWG. Mounts in .64" (16.26 mm) diameter hole from front of panels up to .125" (3.18 mm) thick, using washer and locknut supplied. Can also be "D"-hole mounted for non-turn mounting (see drawing). Pin diameter. is .093".

CB-4M Same as CB-3M, except 4 pin.

CB-3M



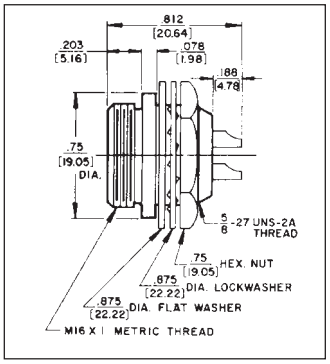

Insert Part No.	Contacts	Dimensions, In. (mm)	
		Length	Diameter
CB3F	3	1.594 (40.49)	.703 (17.86)
CB3M	3	.781 (19.84)	.705 (19.05)

MICROPHONE CONNECTORS

Connectors with 5/8-27 threads are designed for use with single conductor microphone cable with .281" (7.14 mm) maximum outside diameter. 44 adapts 2501F to fit standard 2-conductor phone jack. Coupling ring on 2501F is removable for fast change from female to male type. Spring assembled into body, cable braid and spring clamped by hollow set screws .281" (7.14 mm) maximum cable diameter. 2501MP mounts in .390" (9.92 mm) diameter hole.



44

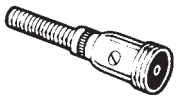

2501M



2501F



2501MP

MINI-CON MINIATURE CONNECTORS

Approximately 1/2 the size of standard microphone connectors. Ideal for miniature lapel microphones, musical instruments and wherever small cable is used. Accepts single-conductor shielded cable up to .187" (4.76 mm) diameter Coupling ring on 5501F removable for quick change of female to male type. Cable is braid spring clamped to body by hollow point set screw.

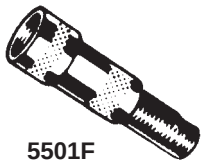

5501F



5501M



5501MF



5501MP

Part Number	Description	Mounting Hole, Inches (mm)
5501F	Female Plug	—
◊5501M	Male Plug	—
◊5501MF	Receptacle	.375 (9.52) (Front of panel)
5501MP	Receptacle	.375 (9.52) (Front of panel)

◊Available on special order; contact Switchcraft for price and delivery.

DIMENSIONS ARE FOR REFERENCE ONLY Inch (mm)

* Please visit the product pages on our website for the most up-to-date product information

HP75BNC SERIES BNC CONNECTORS



HP75BNC9

Switchcraft Inc. introduces a complete line of true 75 Ohm BNC cable mount connectors. This new series was developed for the broadcast industry, or wherever true 75 Ohm impedance BNC's are used. The HP75BNC Series is available in a wide range of styles, to accommodate the most popular types of coaxial cables. All are crimp terminated using standard crimping tools.

FEATURES AND BENEFITS

- True 75 Ohm impedance
- Gold-plated center pins for increased life
- Available for a wide range of cable types
- Outstanding electrical performance
- Rugged nickel-plated, machined shells

SPECIFICATIONS

Electrical

Characteristic Impedance: 75 Ohms
Voltage Rating: 500 Volts RMS
Return Loss: Less than -25 db at 3 GHz
Insulation Resistance: 5000 Megohms min

MECHANICAL

Lifecycles: 500 min
Center Contact Retention: 6 lbs. min
Coupling Mechanism: 100 lbs. min
Force to Engage: 2.5 lbs. max

ENVIRONMENTAL

Thermal Shock: -65° C to 165° C
Moisture Resistance: Mil Std 202
Corrosion: Mil Std 202
Flammability: UL 94-VO
Vibration: Mil Std 202
Solvent Resistance: Mil Std 202

FINISH

Body/Bayonet: Nickel-plated copper alloy
Center Conductor: 50 mi gold-plated copper alloy

ORDERING INFORMATION

Part Number	Cable Type
HP75BNC1	Belden #8241
HP75BNC2	Belden #8281B
HP75BNC6	Belden #1695A
HP75BNC7	Belden #1694A
HP75BNC9	Belden #1505A
HP75BNC10	Belden #1506A
HP75BNC12	Belden #1855A

DIMENSIONS ARE FOR REFERENCE ONLY Inch (mm)

® Registered trademark of Switchcraft, Inc.
Note: Contact your Switchcraft Representative for price and delivery

* Please visit the product pages on our website for the most up-to-date product information

HP75BNC SERIES BNC CONNECTORS (continued)

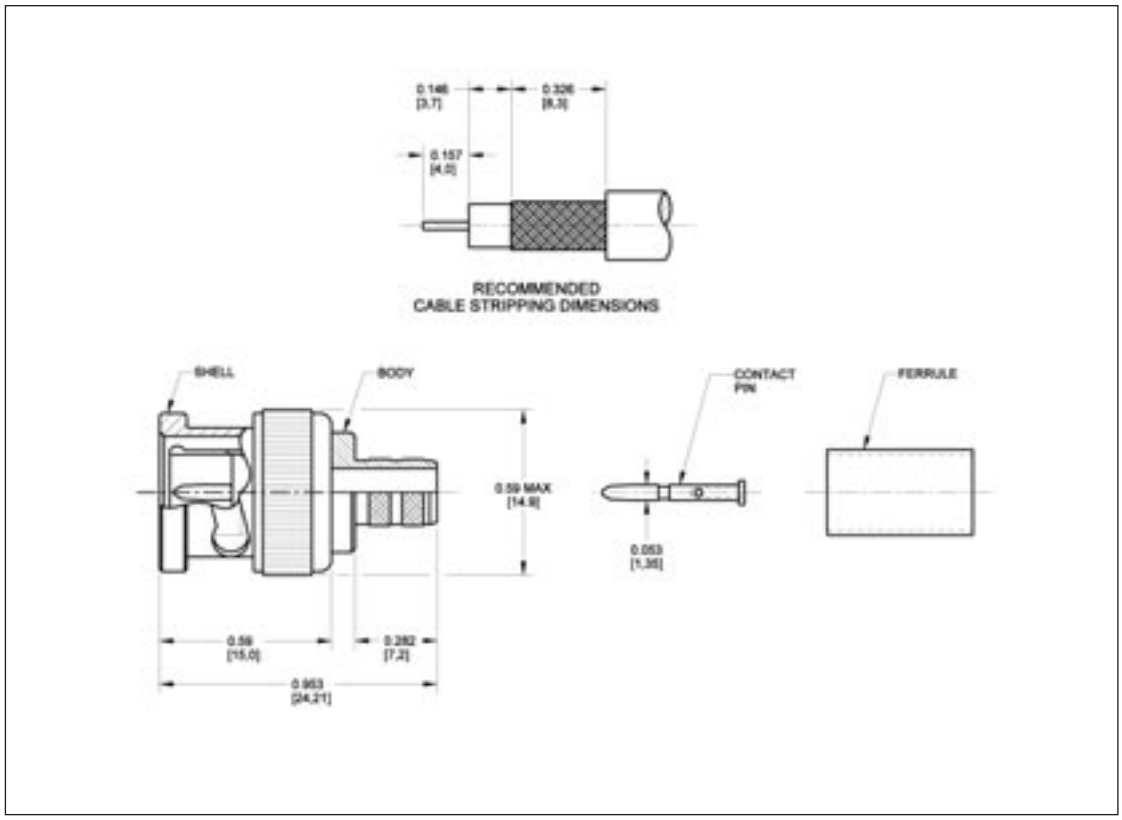

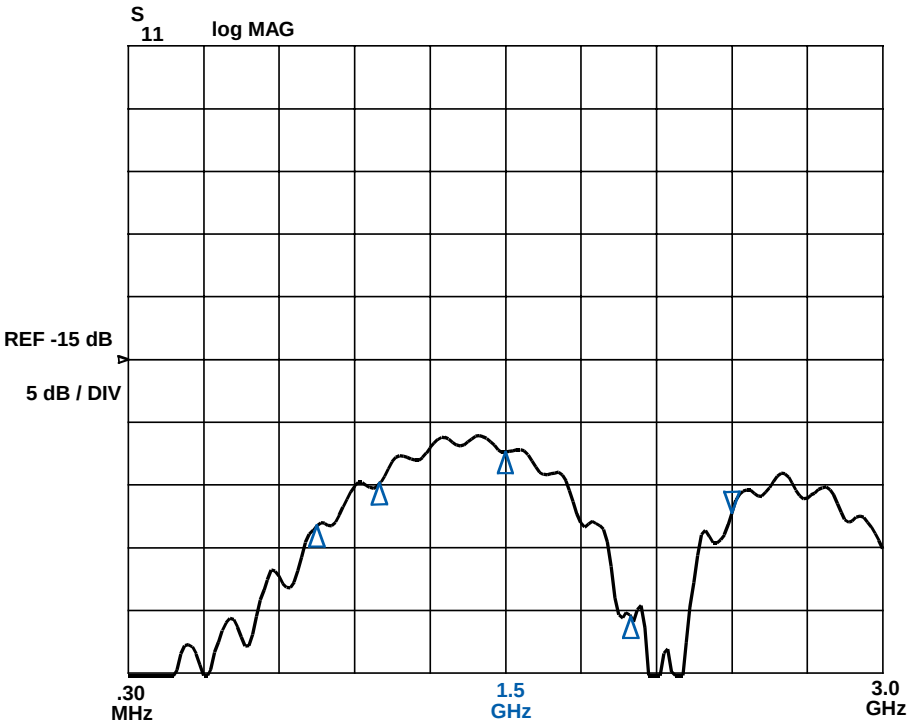

RETURN LOSS

DIMENSIONS ARE FOR REFERENCE ONLY Inch (mm)

EAC RECEPTACLES

SERIES EAC

Two and three-pin/contact grounding primary power receptacles are designed to meet EN 60 320, as well as applicable UL, CSA, VDE and other specifications. Receptacles feature choice of short, standard or long solder lugs or FASTON ® terminals. Receptacles snap-in or screw mount from the front or rear of panel. Receptacles have orbitally riveted lugs (except EAC233, EAC305, EAC323 EAC325, EAC333, EAC405) for superior mechanical/electrical connections. Extended socket versions permit minimum behind-panel depth.

Receptacles are designed for use in European and domestic instrumentation, power rack mounted devices, test equipment and appliances. Three-pin male receptacles have .125" (3.18 mm) longer center (ground) pin. Ground circuit is established before power circuits "make", and is maintained until after power circuits "break".



EAC227



EAC311



EAC305



EAC323



EAC309



EAC325



EAC333



EAC333S

DIMENSIONS ARE FOR REFERENCE ONLY Inch (mm)

® Registered trademark of Switchcraft, Inc.
Note: Contact your Switchcraft Representative for price and delivery

* Please visit the product pages on our website for the most up-to-date product information

EAC RECEPTACLES (continued)

SERIES EAC



EAC405

SPECIFICATIONS
ELECTRICAL

Insulation Resistance: 2 million megohms @ 500 V DC.
Dielectric Strength: 1500 V (rms).
Arcing Test: Meets UL 498 Standard.

MECHANICAL

Solderability Standard: Meets MIL-STD-202, method 208, EIA RS-186-9E.

ENVIRONMENTAL

Thermal Range: -55° C to +65° C (except EAC45x series).
Salt Spray: Meets MIL-STD-202, method 101; EIA-RS-186-5E, method 5.

MATERIAL

Shell: EAC307 through EAC327. Black polyester. EAC303, EAC307 through EAC315. UL flammability rating of UL94 V-0, yellow card #E45575.

EAC309 through EAC327, EAC333. Black polyester, UL flammability rating of UL94 V-0, yellow card #E45575.

EAC233, EAC233S, EAC305, EAC325, and EAC333S. Black polycarbonate, UL flammability rating of UL94 V-0, yellow card #E45329.

EAC323, EAC409 through EAC411 Black polycarbonate, UL flammability rating, or equivalent UL94 V-0, yellow card #E33640, or equivalent.

Pins, Contacts and Terminals: Plated copper alloy.

◊**EAC227**—2-pin male receptacle with standard solder lug terminals, similar to EAC327.

◊**EAC233**—2-pin, male receptacle with right-angle housing for PC mount. PC terminals project .130" (3.3 mm) to extend through PC board. Rear of panel mount. Two, .136 " (3.45 mm) diameter holes permit fastening to PC board; two additional .136" (3.45 mm) holes are for fastening to panel or chassis, if required.

◊**EAC233S**—Similar to EAC233, but with two, snap-in retainers through mounting flanges for PC mount.

EAC305—3-contact female receptacle. Front mount with two, #4 screws or .094" (2.38 mm) diameter rivets (not supplied).

EAC309—3-pin male receptacle with standard lug terminals. Mounts from front or rear of panel with two, #5 screws or .125 " (3.18 mm) diameter rivets (not supplied).

EAC311—3-pin male receptacle with FASTON® terminals. Mounts from front or rear of panel with two, #5 screws or .125 " (3.18 mm) diameter rivets (not supplied).

◊**EAC315**—3-pin male receptacle with long solder lug terminals. Mounts from front or rear of panel with two, #5 screws or .125" (3.18 mm) diameter rivets (not supplied).

◊**EAC319**—3-pin male receptacle with short solder lug terminals. Mounts from front or rear of panel with two, #5 screws or .125" (3.18 mm) diameter rivets (not supplied).

◊**EAC323**—3-pin male receptacle with short solder lug terminals. Extended socket housing (mounting flange on rear of receptacle) provides more behind panel clearance. Mounts with two, #4 screws or .094" (2.38 mm) diameter rivets (not supplied).

EAC325—3-contact female receptacle with short solder lug terminals. Extended housing (mounting flange on rear of receptacle) provides more behind panel depth. Mounts with two, #4 screws or .094" (2.38 mm) diameter rivets (not supplied).

EAC327—3-pin male receptacle, similar to EAC319 except with standard solder lugs.

EAC333—3-pin, 10A, 250V male receptacle with right-angle housing for PC mount. PC terminal and hole mounting details are the same as for EAC233. Ground pin is integral with ground solder lug on rear of receptacle.

◊**EAC333S**—Similar to EAC333, but with two, snap-in retainers through mounting flanges for PC mount.

◊**EAC405**—3-contact female receptacle with standard solder lug terminals. Snap-in panel mounting.

EAC409—3-pin male receptacle with standard solder lug terminals. Snap-in panel mounting.

EAC411—3-pin male receptacle with FASTON terminals. Snap-in panel mounting.

EAC413—3-pin male receptacle with FASTON terminals on LINE and NEUTRAL and a solder lug on EARTH GROUND. Snap-in panel mounting.

EAC451—3-contact female receptacle with straight PC terminals for use in "HOT" applications. Snap-in panel mounting.

EAC453—Same as EAC451 except with solder lug terminations.

EAC455—Same as EAC451 except with FASTON terminations.

EAC457—Same as EAC451 except with FASTON power terminations and solder lug ground termination.

◊ Available on special order only; contact Switchcraft for price and delivery.

DIMENSIONS ARE FOR REFERENCE ONLY Inch (mm)

* Please visit the product pages on our website for the most up-to-date product information

SERIES EAC (continued)

Part Number	Pins/ Contacts [1]	Mounting [2]	Terminals	Listings	Ratings	Switchcraft Mating Number [3]	Comments [4]
◊EAC227	M	Front or Rear	Solder Lug	UL CSA	15 A, 250 V AC	P2392	—
◊EAC233	M	Rear	PC	UL, CSA, VDE	15 A, 250V AC 10 A, 250 V AC	P2392	Semko, Demko, Nemko, SETI, and SEV Approved
◊EAC233S	M	Rear	PC	UL, CSA, VDE	15 A, 250 V AC 10 A 250 V AC	P2392	Semko, Demko, Nemko, SETI, and SEV Approved
EAC305	F	Front	Solder Lug	UL & VDE VDE	15 A, 250 V AC 10 A, 250 V AC	—	Semko, and SEV Approved
EAC309	M	Front or Rear	Solder Lug	UL & CSA VDE	15 A, 250 V AC 10 A, 250 V AC	P2392	Demko, Semko, Nemko, SETI and SEV Approved
EAC311	M	Front or Rear	FASTON	UL & CSA VDE	15 A, 250 V AC 10 A, 250 V AC	P2392	Semko, Demko, Nemko, SETI and SEV Approved
◊EAC315	M	Front or Rear	Solder Lug (Long)	UL & CSA VDE	15 A, 250 V AC 10 A, 250 V AC	P2392	Semko, Demko, Nemko, SETI and SEV Approved
◊EAC319	M	Front or Rear	Solder Lug (Short)	UL & CSA VDE	15 A, 250 V AC	P2392	—
◊EAC323	M	Front or Rear	Solder Lug (Short)	UL & CSA VDE	15 A, 250 V AC 10 A, 250 V AC	P2392	Mounting flange on rear Semko, Nemko, SETI Approved
EAC325	F	Rear	Solder Lug (Short)	UL & CSA VDE	15 A, 250 V AC 10 A, 250 V AC	—	Mounting flange on rear
EAC327	M	Front or Rear	Solder Lug	UL & CSA VDE	15 A, 250 V AC 10 A, 250 V AC	P2392	Demko, Semko, Nemko SETI and SEV Approved
EAC333	M	Rear	PC	UL, & VDE CSA	15 A, 250 V AC 10 A, 250 V AC	P2392	Semko, Demko, Nemko, SETI, SEV Approved
◊EAC333S	M	Rear	PC	UL & VDE CSA	15 A, 250 V AC 10 A, 250 V AC	P2392	Semko, Demko, Nemko, SETI, SEV Approved
◊EAC405 [5]	F	Snap-In	Solder Lug	UL & CSA VDE	15 A, 250 V AC 10 A, 250 V AC	—	—
EAC409 [5]	M	Snap-In	Solder Lug	UL, & CSA VDE	15 A, 250 V AC 10 A, 250 V AC	P2392	Demko, Semko, Nemko, SETI and SEV Approved
EAC411 [5]	M	Snap-In	FASTON	UL, CSA VDE	15 A, 250 V AC 10 A, 250 V AC	P2392	Semko, Demko, Nemko, SETI and SEV Approved
EAC413 [5]	M	Snap-In	Solder Lug/ FASTON	UL, CSA VDE	15 A, 250 V AC 10 A, 250 V AC	P2392	Semko, Demko, Nemko, SETI and SEV Approved
EAC451 [6]	F	Snap-In [6]	PC	UL, & CSA VDE	15 A, 250 V AC 10 A, 250 V AC	—	Rated for use up to 120°C
EAC453 [6]	F	Snap-In [6]	Solder Lug	UL, & CSA VDE	15 A, 250 V AC 10 A, 250 V AC	—	Rated for use up to 120°C
EAC455 [6]	F	Snap-In [6]	FASTON	UL, & CSA VDE	15 A, 250 V AC 10 A, 250 V AC	—	Rated for use up to 120°C
EAC457 [6]	F	Snap-In [6]	Solder Lug/ FASTON	UL, & CSA VDE	15 A, 250 V AC 10 A, 250 V AC	—	Rated for use up to 120°C

1 M = Male; F = Female.
2 F = Front; R = Rear. See mounting drawings for mounting details.
3 Also mates with Belden and other standard cords.
4 Semko (Sweden), Demko (Denmark), Nemko (Norway), SETI (Finland), SEV (Switzerland).
5 Receptacles are snap-in mount, and can be ordered to accommodate .030, .040, .050 and .060 inch panel thickness. For snug fit in panel or for other specifying assistance, contact Switchcraft.
6 Available only for .050 inch and .060 inch panel thickness
◊ Available on special order only; contact Switchcraft for price and delivery.

UL No. E38829—EAC-309 thru -327 UL No. E65081—EAC-305
CSA Guide 365-E-1, Class 6233, File Card No. LR27474
VDE Certificate of Compliance No. 731 (EAC-305, -325, -405), all others VDE approval No. 3181.

If you have been using a 15 amp rated Switchcraft EAC connector ending in an even number, you can now buy an identical part number that has a 10 amp European rating in addition to the 15 amp UL and CSA approval. The part number for the new dual rated part is one less than the old part number (eg. EAC310 becomes EAC309, EAC412040 becomes EAC411040, EAC234 becomes EAC233, EAC458050 becomes EAC457050, etc.)

DIMENSIONS ARE FOR REFERENCE ONLY Inch (mm)

® Registered trademark of Switchcraft, Inc.
Note: Contact your Switchcraft Representative for price and delivery

* Please visit the product pages on our website for the most up-to-date product information

EAC RECEPTACLES (continued)

SERIES EAC

Front Mount
EAC227, EAC309, EAC311, EAC315, EAC319, EAC327

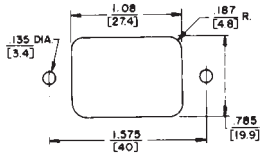

Front Mount
EAC305
Figure 2

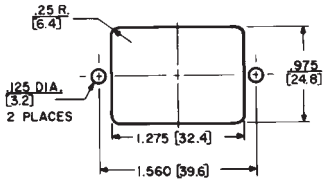

Rear Mount
EAC323
Figure 6

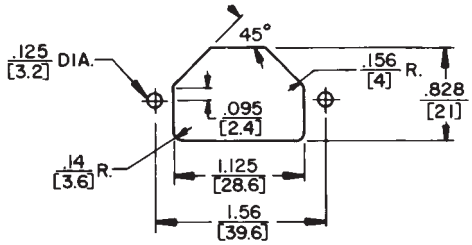

Front Mount
EAC323
Figure 4

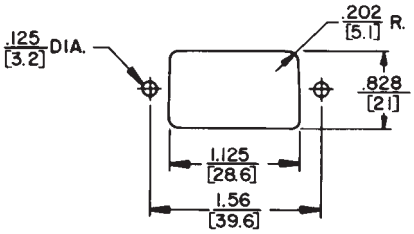

EAC233, EAC309, EAC311, EAC315, EAC319, EAC327, EAC333
Figure 7

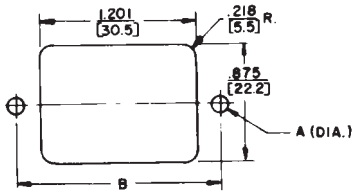

Front Mount
EAC225
Figure 5

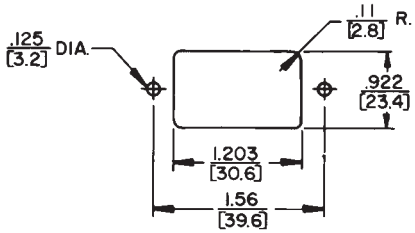

Rear Mount
EAC325
Figure 9

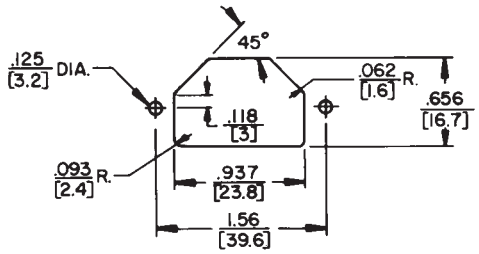

Snap-in Mount
EAC409, EAC411

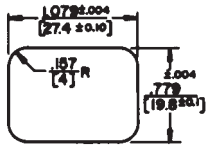

Snap-in Mount
EAC405, EAC451, EAC453, EAC455, EAC457

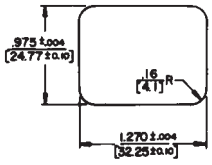

Recommended
PC Board Layout
EAC233, EAC333
Figure 10

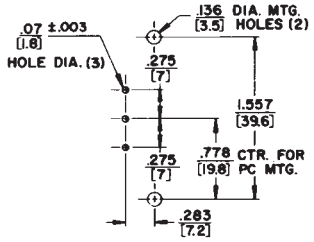

Note: Center .07 inch diameter hole not used for 233, 234

Note: Unless otherwise specified, all dimension tolerances are ± .01" (+0.25 mm)

DIMENSIONS ARE FOR REFERENCE ONLY Inch (mm)

* Please visit the product pages on our website for the most up-to-date product information

EAC RECEPTACLES (continued)

SERIES EAC

EAC227

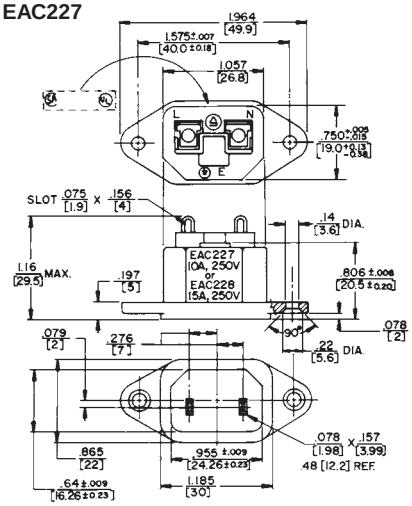

EAC233S, EAC333S

Note: Center PIN/Terminals not used on EAC233S

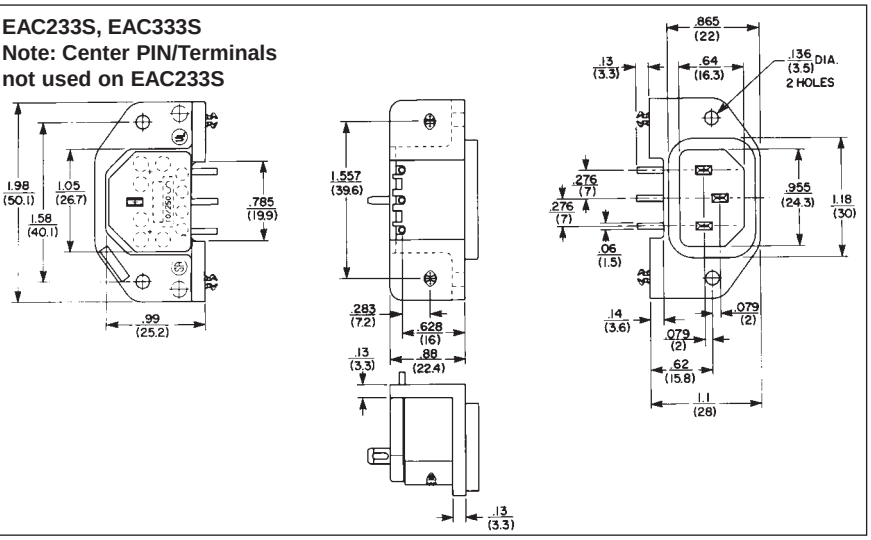

EAC327

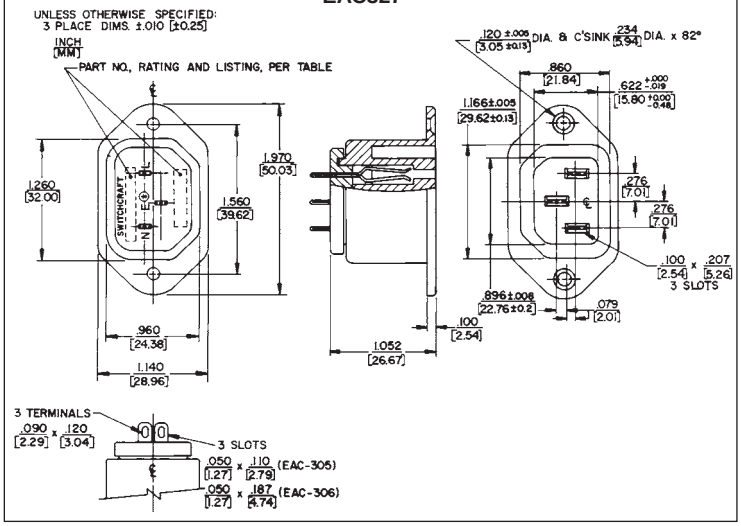

EAC309, EAC315

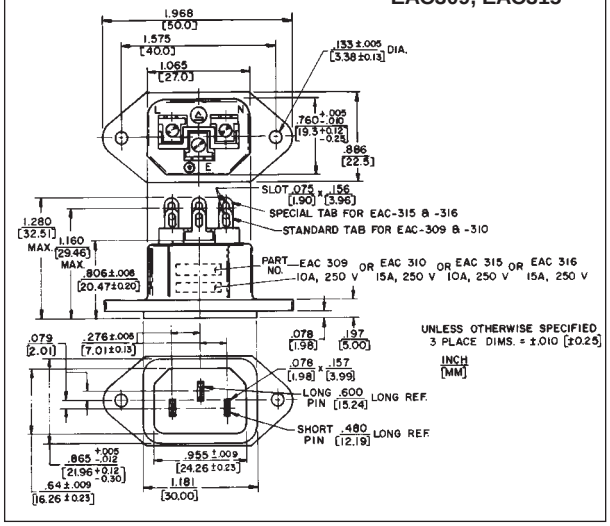

EAC311

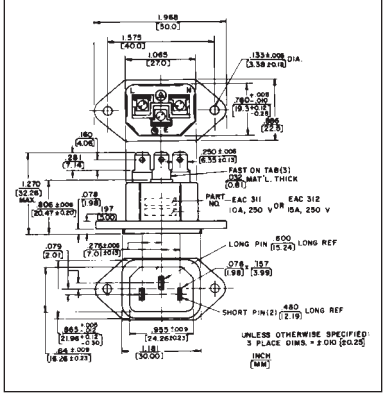

EAC233, EAC333

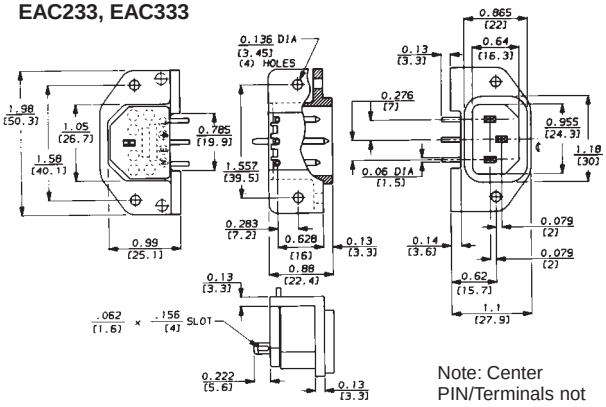

Note: Center PIN/Terminals not used on EAC233

Chassis/Panel Opening

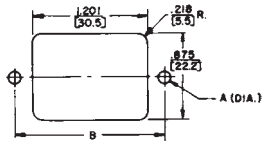

Recommended PC Board Layout (Component Side)

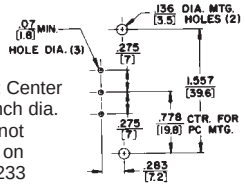

Note: Center .07 inch dia. hole not used on EAC233

Note: Unless otherwise specified, all dimension tolerances are ± .01" (+0.25 mm)

DIMENSIONS ARE FOR REFERENCE ONLY Inch (mm)

® Registered trademark of Switchcraft, Inc.
Note: Contact your Switchcraft Representative for price and delivery

* Please visit the product pages on our website for the most up-to-date product information

EAC RECEPTACLES (continued)

SERIES EAC

EAC319, EAC327

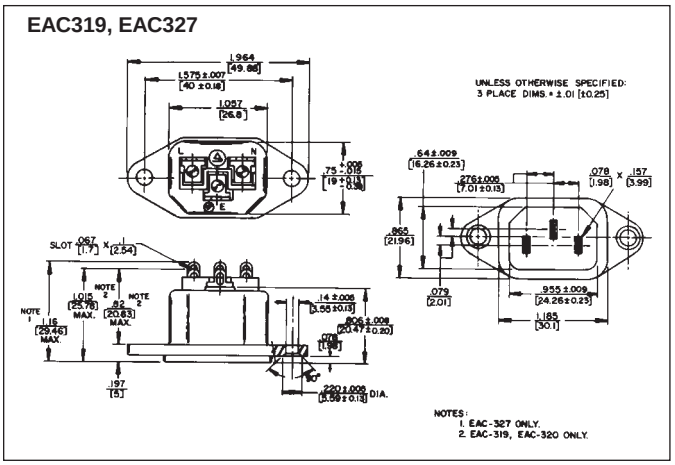

EAC323

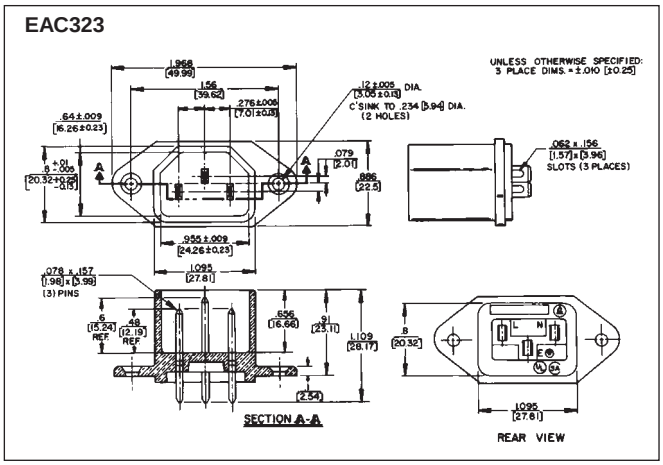

EAC325

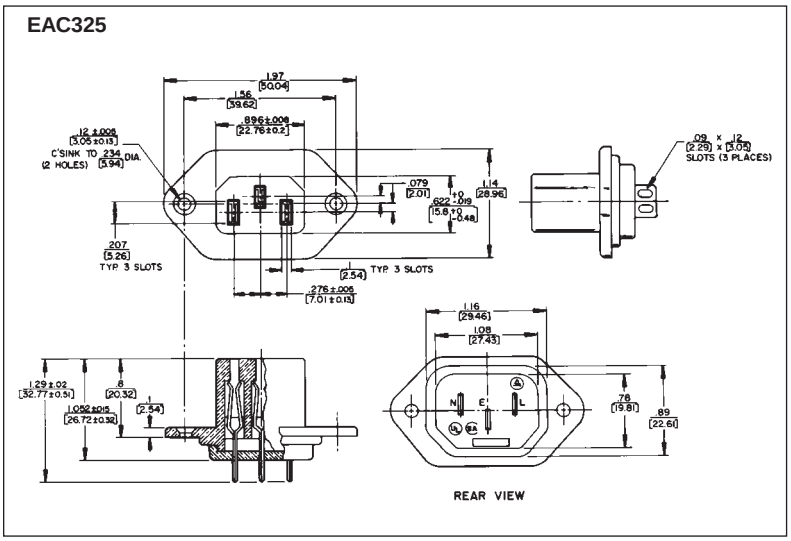

EAC405

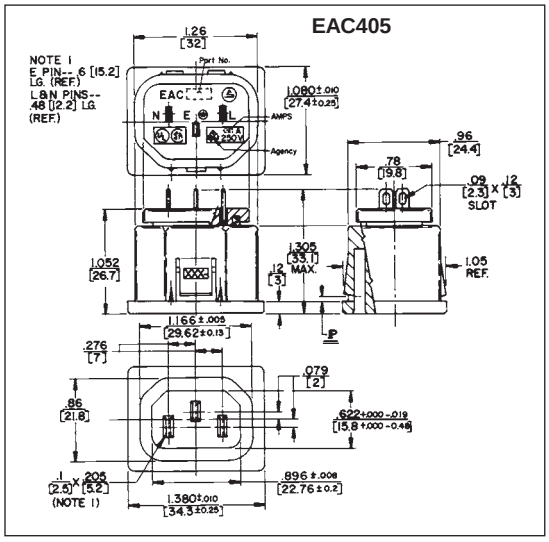

EAC409

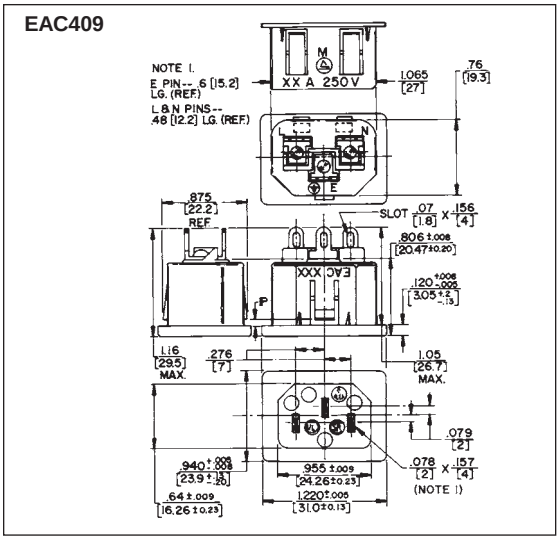

EAC411

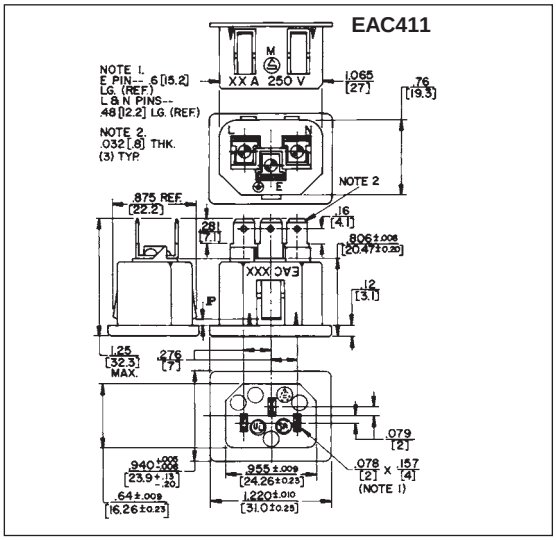

DIMENSIONS ARE FOR REFERENCE ONLY Inch (mm)

* Please visit the product pages on our website for the most up-to-date product information

EAC RECEPTACLES (continued)

SERIES EAC

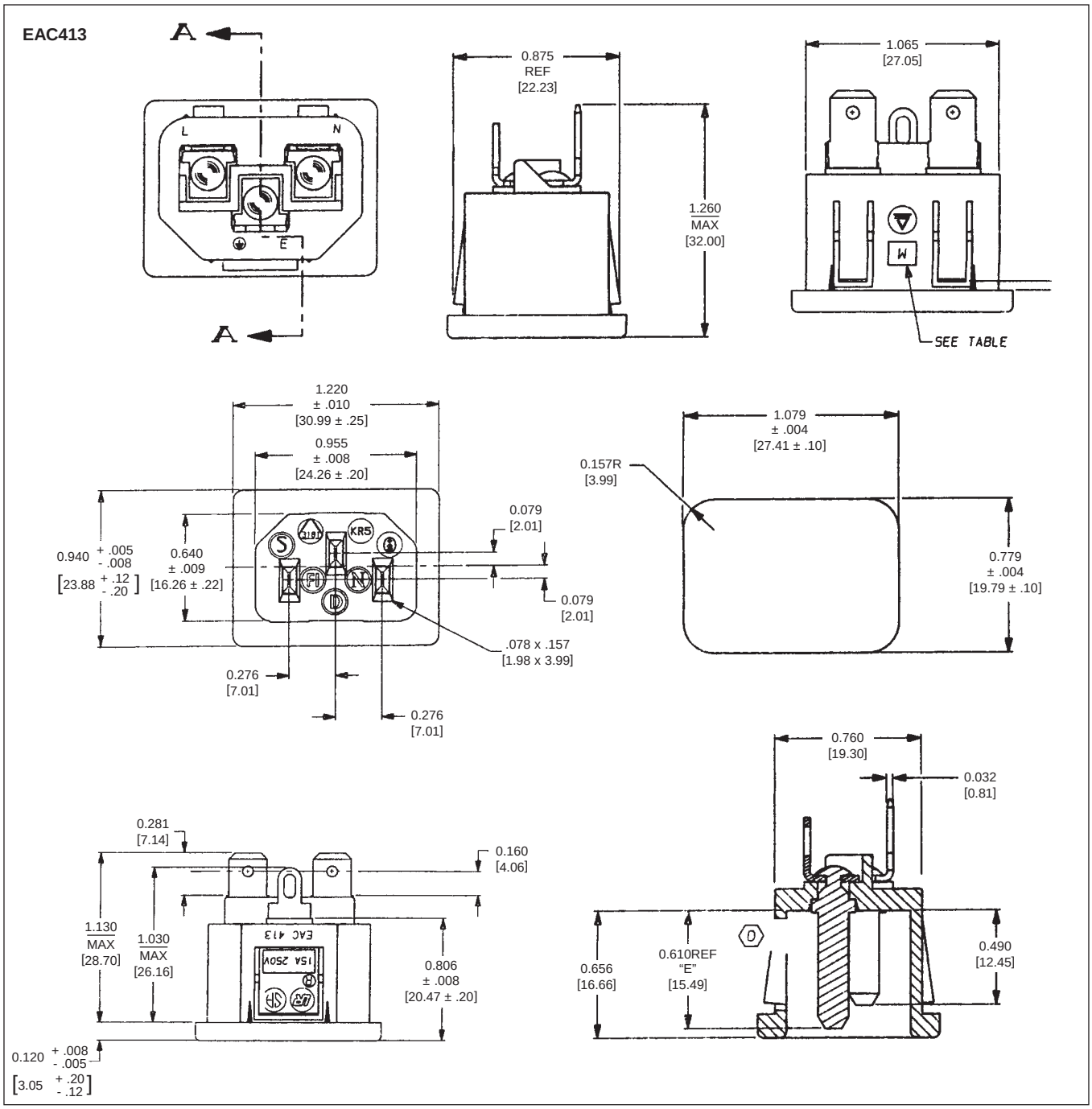

DIMENSIONS ARE FOR REFERENCE ONLY Inch / (mm)

® Registered trademark of Switchcraft, Inc.
Note: Contact your Switchcraft Representative for price and delivery

* Please visit the product pages on our website for the most up-to-date product information

EAC RECEPTACLES (continued)

SERIES EAC

EAC451

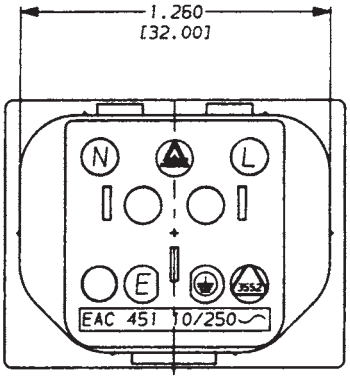

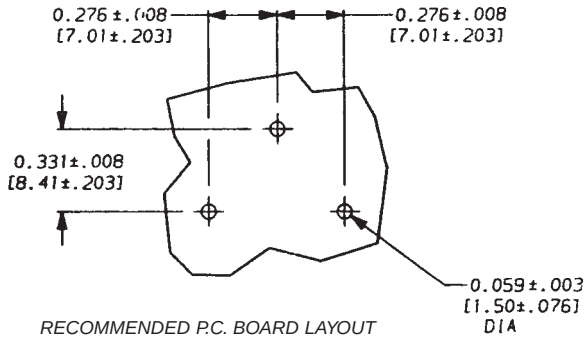

RECOMMENDED P.C. BOARD LAYOUT

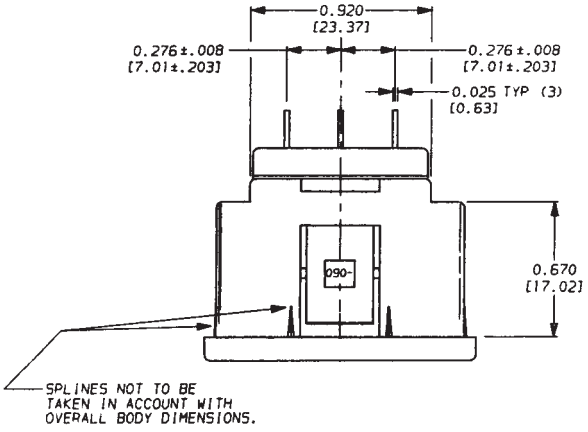

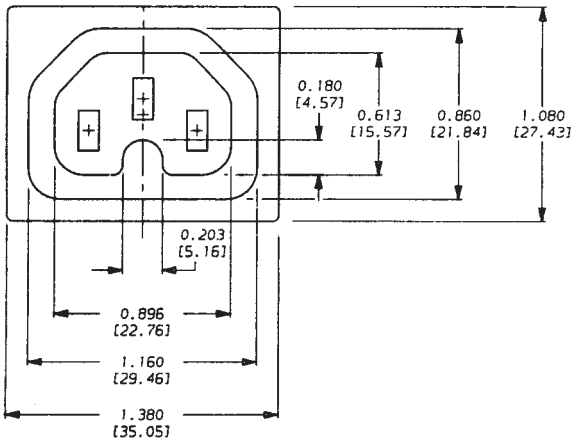

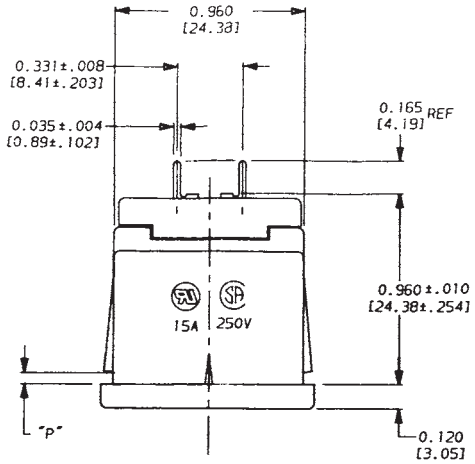

DIMENSIONS ARE FOR REFERENCE ONLY Inch (mm)

* Please visit the product pages on our website for the most up-to-date product information

EAC RECEPTACLES (continued)

SERIES EAC

EAC453

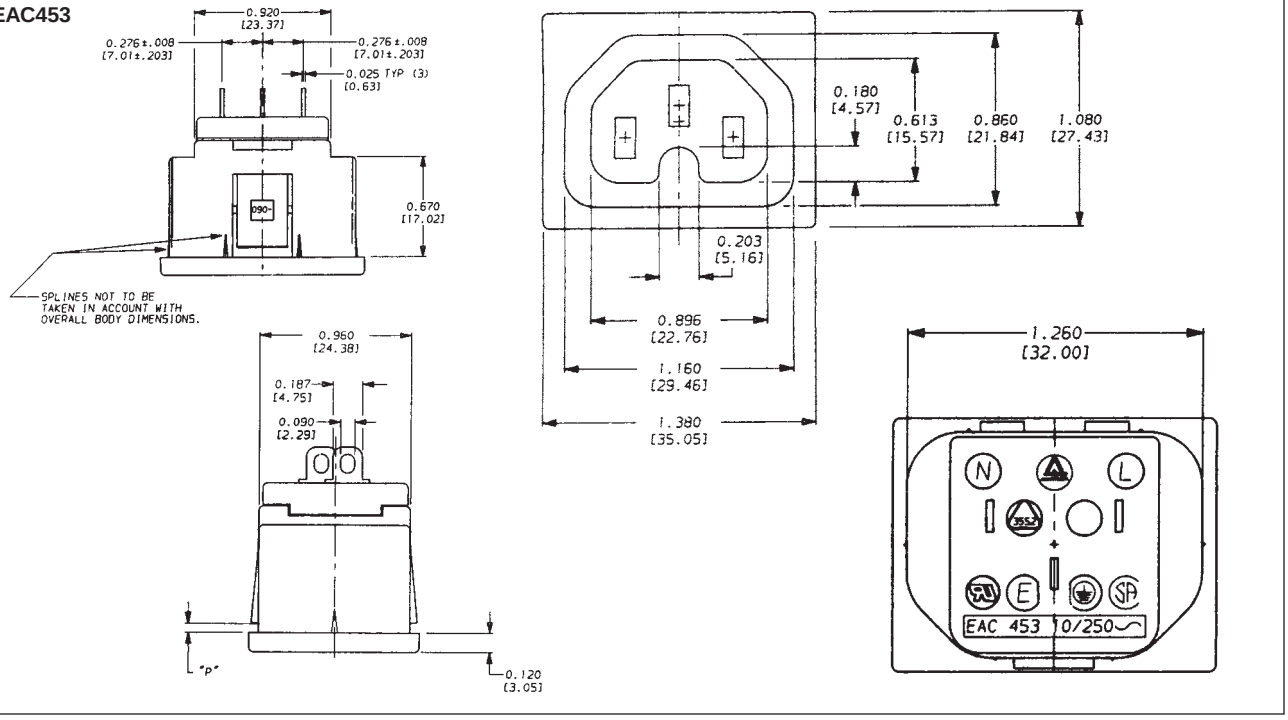

EAC455

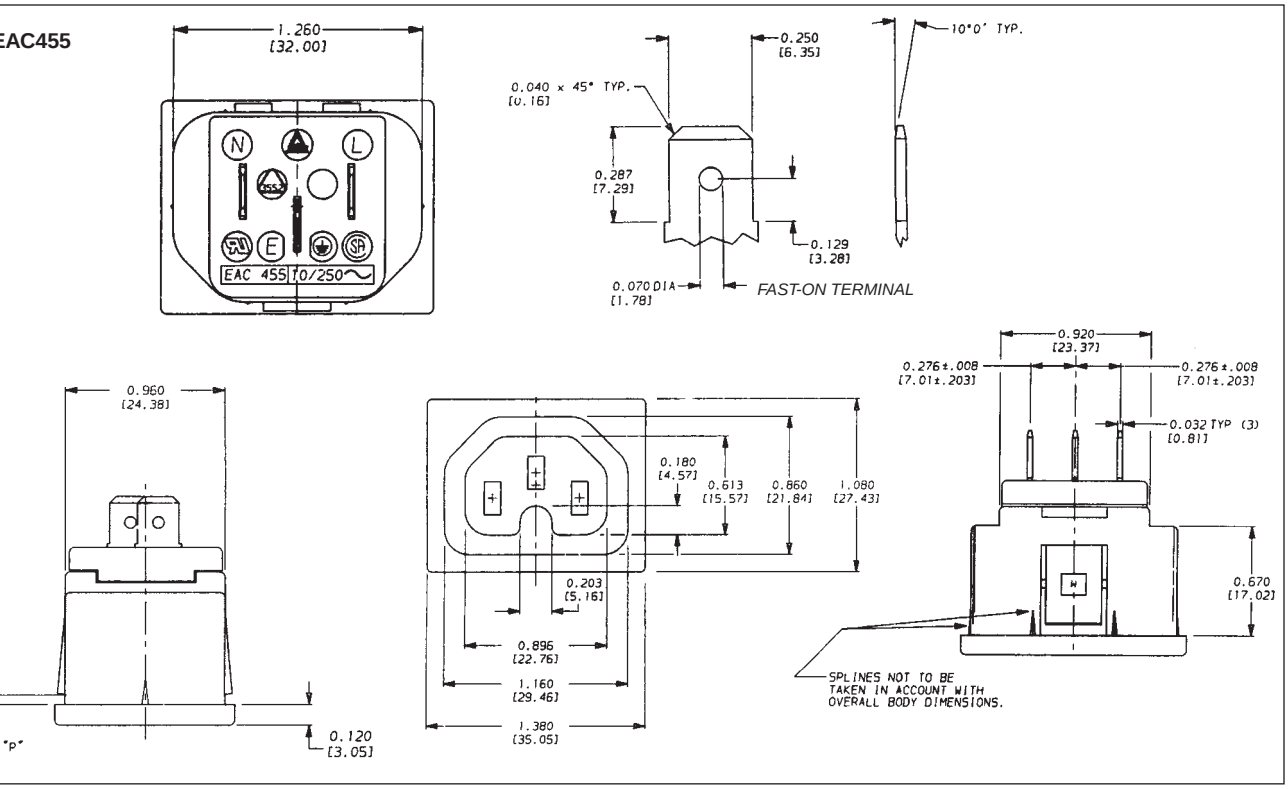

DIMENSIONS ARE FOR REFERENCE ONLY Inch (mm)

® Registered trademark of Switchcraft, Inc.
Note: Contact your Switchcraft Representative for price and delivery

* Please visit the product pages on our website for the most up-to-date product information

EAC RECEPTACLES (continued)

SERIES EAC

EAC457

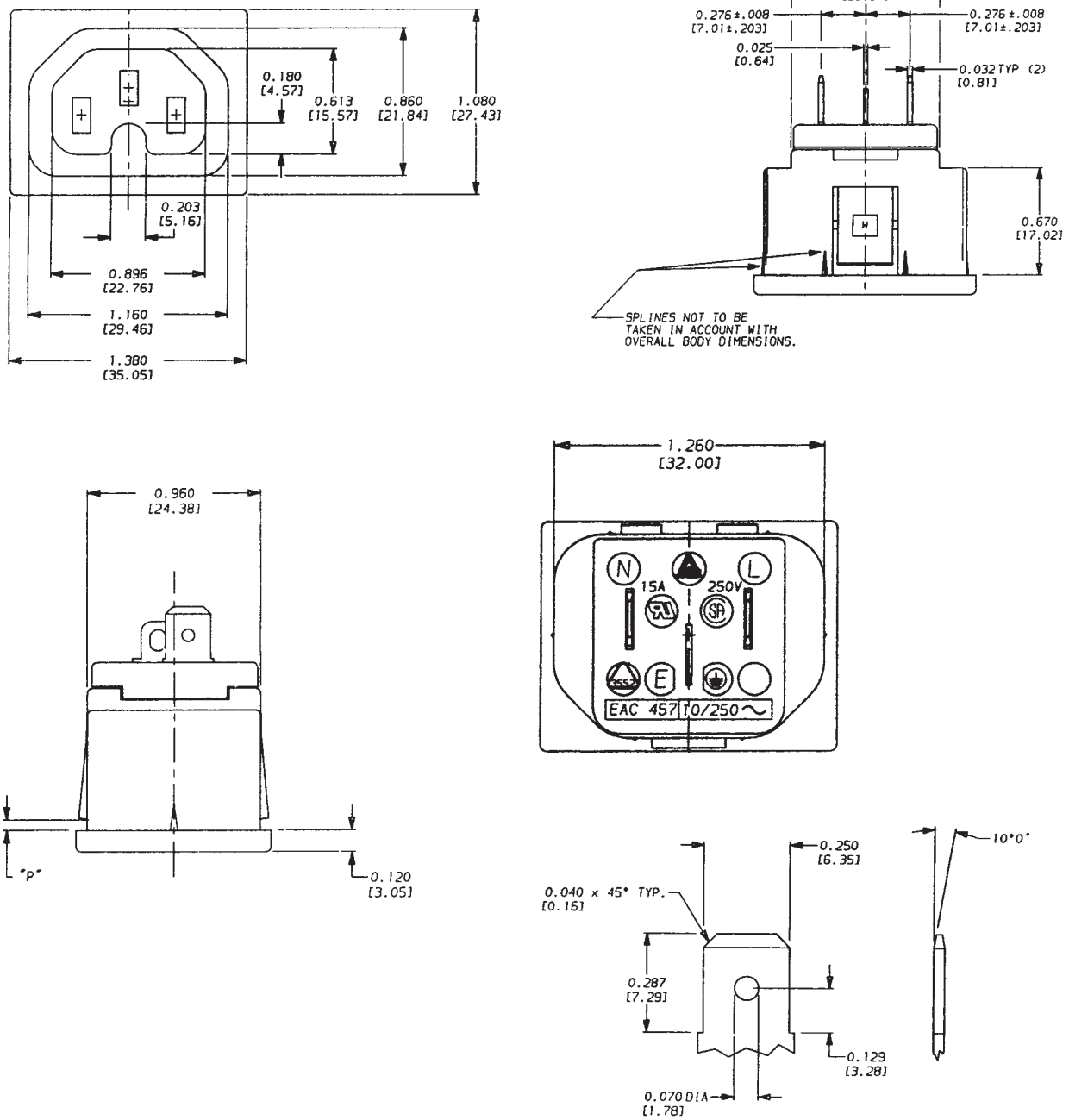

DIMENSIONS ARE FOR REFERENCE ONLY Inch (mm)

RAPC322 POWER INLET SOCKET

Switchcraft introduces the RAPC322, an IEC320 inlet developed as a low power interconnect used in a variety of applications. The RAPC322 is molded from 94-VO rated material, is UL recognized, and meets a wide variety of approvals including CSA and VDE. The RAPC is rated at 2.5A at 250V. Applications for the RAPC322 include notebook computers, medical devices, and data communications products.



FEATURES AND BENEFITS

- Snap-in feet facilitate wave soldering
- Top and side slots allow chassis to captivate connector
- Conforms to EN 60320-1/2

APPLICATIONS

- Appliance Inlet
- Personal Computer
- Data Communications
- Medical Equipment
- Test Equipment
- Instrumentation

SPECIFICATIONS

GENERAL

Current Rating: 5A, UL and CSA 2.5A, VDE and SEMKO
Nominal Voltage: 250V
Temperature Range: - 55°C to 65°C
Dielectric Strength: 2000V @ 1 minute

MATERIALS

Housing: Black, molded thermoplastic, UL 94V-0
Male Pins: Copper alloy, nickel plated
PC Terminals: Copper alloy, tin plated

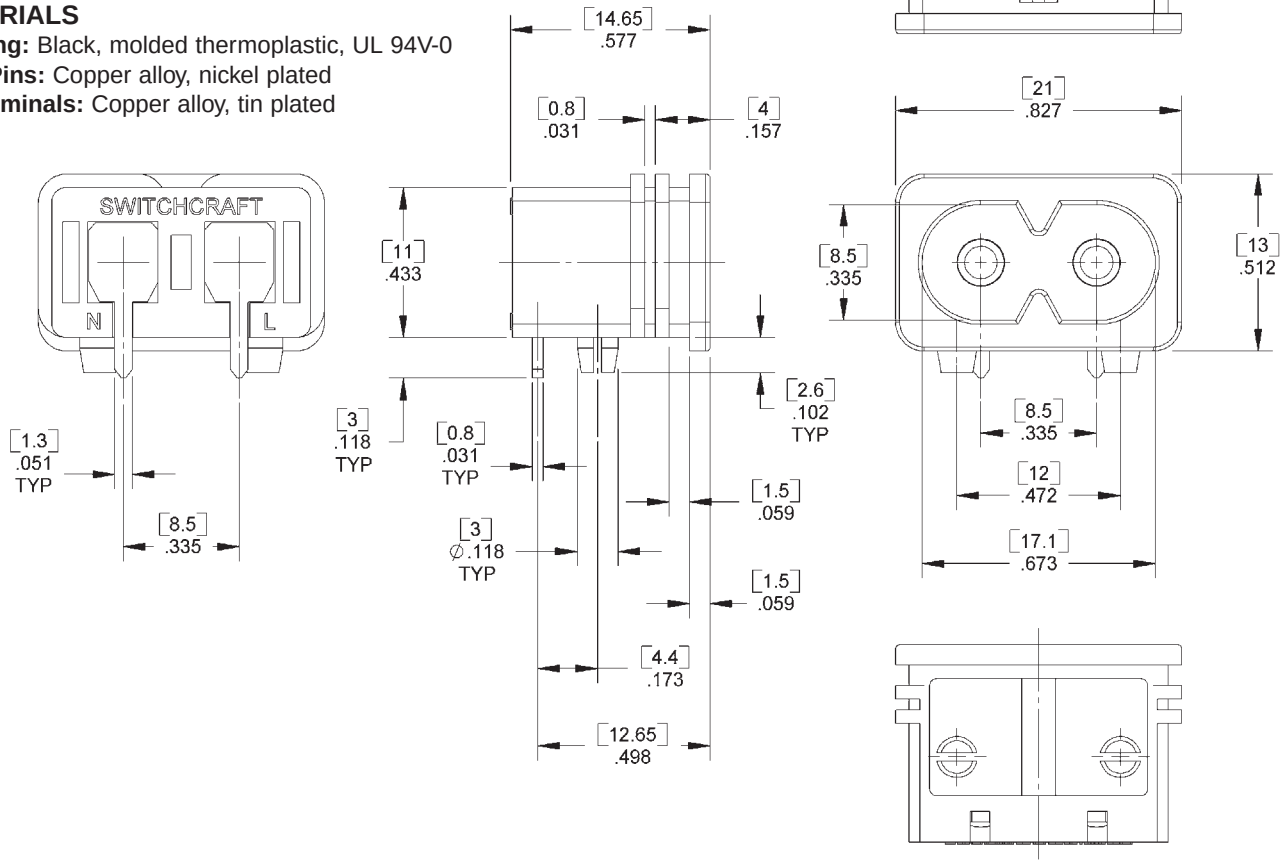

DIMENSIONS ARE FOR REFERENCE ONLY Inch (mm)

® Registered trademark of Switchcraft, Inc.
Note: Contact your Switchcraft Representative for price and delivery

* Please visit the product pages on our website for the most up-to-date product information

JACK SCHEMATICS

Circuit Types: Jacks normally have through circuits, shunt circuits, and/or isolated switching circuits, either individually or in various combinations. The chart below shows schematics of 39 common jacks - many more combinations are possible, but these are the most commonly used. A basic description of the switching action of each jack accompanies each schematic.

Military Identification: Military specifications covering phone jacks use a special code to describe jack functions. Jack schematic descriptions are coded J-1 through J-13 (as appropriate) to coincide with Federal Item Identification Guides for Supply Cataloging. One or more groups of suffix numbers/letters identify isolated switching circuits used. Suffixes identify the switching by industry recognized notation, i.e., 1-A, 1-B, 1-C, 1-D, etc. See chart below.

Notation	Meaning
1-A	One, SPST switching circuit. Also known as NO (normally open) or "make" circuit.
1-B	One, SPST switching circuit. Also known as NC (normally closed) or "break" circuit.
1-C	One, SPDT switching circuit. Also known as transfer or "break" before "make" circuit.
1-D	One, SPDT switching circuit. Also known as "make" before "break" circuit.

NOTE: Number indicates the quantity of circuit - 2-A means 2, A circuits. Terminals locations shown on jack schematics do not necessarily coincide with physical locations on jacks. Not all circuit types available on all jacks.

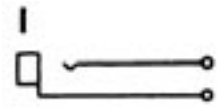

Single open circuit. (J1.)

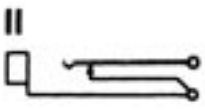

Single closed circuit, sleeve common. (J3).



Single closed circuit. (J4).

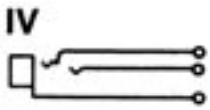

Double open circuit. (J2).



Single open circuit. Isolated switching "make" circuit. (J1-1-A).

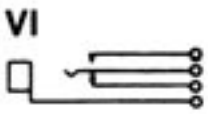

Transfer circuit. (J5).



Tip closed, ring open. (J10).



Tip closed, ring open (common to sleeve). (J6).

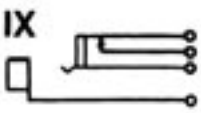

Single open circuit. Isolated switching "break" circuit. (J1-1B).

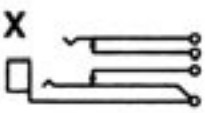

Double closed circuit, ring common to sleeve. (J13).

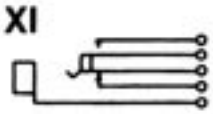

Single closed. Isolated switching "make" circuit. (J4-1A).



Double closed circuit. (J7).

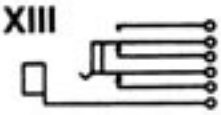

Single closed circuit. Isolated switching transfer circuit. (J4-1C).



Double closed circuit. Isolated switching "break" circuit. (J7-1B).



Double open circuit. Isolated switching transfer circuit. (J2-1C).



Double open circuit. Isolated switching– separate "break" and make circuits (J2-1A-1B).



Single closed circuit Isolated switching "break" circuit. (J4-1B).



Single closed circuit– "make" before "break". (J8).

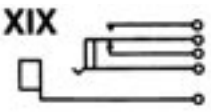

Single open circuit. Isolated switching transfer circuit. (J1-1C).



Double open circuit. Isolated switching "make" circuit. (J2-1A).



Double open circuit. Isolated switching– separate "make" circuits on both tip and ring. (J2-2A).



Double closed circuit. Isolated switching "make" circuit on ring spring. (J7-1A).



Single closed circuit plus "make" before "break". Isolated switching–"make" before "break" circuit. (J8-1D).

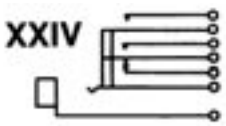

Single open circuit. Isolated switching– separate transfer and "make" circuits. (J1-1A-1C).

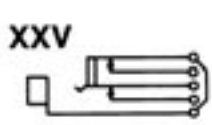

Single closed circuit. Isolated switching "break" circuit. Sleeve common to isolated switching circuit throw. (J4-1B).

DIMENSIONS ARE FOR REFERENCE ONLY Inch (mm)

* Please visit the product pages on our website for the most up-to-date product information

JACK SCHEMATICS

XXVI

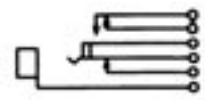

Single closed circuit. Isolated switching–"make" before "break" circuit. (J4-1D).

XXVII

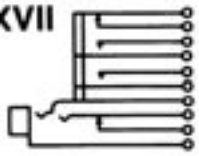

Tip closed; ring open circuits. Isolated switching–two "make" circuits and one "break" circuit. (J10-2A-1B).

XXVIII

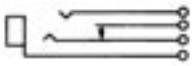

Single open (tip) circuit and single closed (ring) circuit. (J9).

XXIX

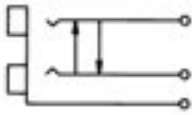

Double jack, 2-conductors on each side. Tip circuits cross shunted; common sleeve. (J12).

XXX



Single open circuit–"make" before "break". (J11).

XXXI

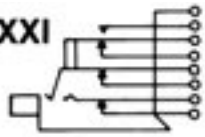

Tip closed; ring closed circuits. Isolated switching–"break" before "make" circuit.

XXXII

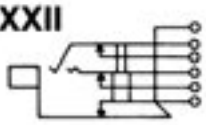

Double closed circuit. Separate sleeve "break" circuit.

XXXIII

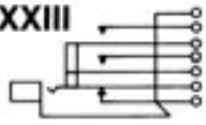

Single closed circuit. Isolated switching–Two "make" circuits.

XXXIV

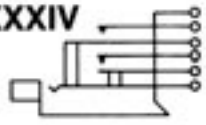

Single open circuit. Isolated switching–Two "make" circuits.

XXXV

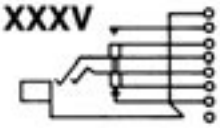

Double open circuit. Isolated switching–One "make" and one "break" circuit.

XXXVI

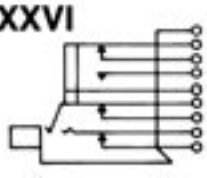

Double closed circuit. Isolated switching–One "make" and one "break" circuit.

XXXVII

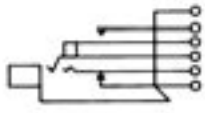

Tip closed; ring open circuits. Isolated switching–One "make" circuit.

XXXVIII

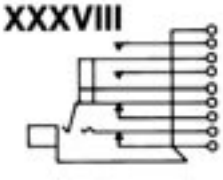

Double closed circuit. Isolated switching–Two "make" circuits.

XXXIX

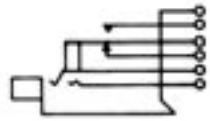

Double open circuit. Isolated switching–"break" before "make" circuit.

WIRE-WRAPPING TERMINATIONS

Switchcraft can build complete Jack Panel Assemblies with jacks, lamp jacks and switches with wire-wrapping terminals. If desired, components with solder lugs and wire-wrapping terminals can be installed in the same assembly.

WIRE-WRAPPING TERMINAL DESIGN

Jack springs with integral wire-wrapping terminals are made of special copper alloy for maximum work-life with excellent resistance to corrosion. Shank of terminal accommodates a maximum of three wire connections. Tini-Telephone® phone jacks, lamp jacks and switches with wire-wrapping terminals have slightly higher stack due to greater spacing required for wrapping tool access. Actuator springs and ground lug terminals are .704" long by .060" wide.

WIRE-WRAPPING CONNECTIONS

Use the chart below as a guide to recommended tools to be used with varying terminal thickness and wire gauges.

Terminal Thickness (Inches)	Wire Gauge	Recommended Wire-Wrapping Tool (Gardner-Denver Co. Part Numbers)	
		Use with 14B1-A Wrapping Bit	Wrapping Tool Sleeve
.020 thru .032	22 & 24	500131	18840
.016	24	500131	18840
.016 thru .032	26	37006	17611-2

SPECIFYING NOTE: Due to assembly variations containing components (solder lugs, wire-wrapping terminals, or both), these Jack Panel Assemblies are available on special order only. Contact Switchcraft.

JACK MATING DATA

NOTE: See tables for jack/plug mating data

DIMENSIONS ARE FOR REFERENCE ONLY Inch (mm)

® Registered trademark of Switchcraft, Inc.
Note: Contact your Switchcraft Representative for price and delivery

* Please visit the product pages on our website for the most up-to-date product information

1/4" LONG FRAME TELEPHONE JACKS

JACK MATERIALS

The complete Switchcraft line of standard size panels, jacks, plugs, switches and accessories are rugged, premium quality devices...hand-crafted by experts...100% inspected... and carefully adjusted to meet the traditionally high quality demands of the telephone industry and the military. Tightly controlled incoming inspection, manufacturing methods, and QC procedures assure you of long-life, reliable components. Typical applications where Switchcraft components have been specified for more than five decades are: telephone central office equipment, switchboards, jackfields, test and patch panels, and station equipment; TV and radio broadcasting consoles; PA and communication consoles; telegraph systems and apparatus; multichannel video and audio patching; and data processing equipment, such as computers, telemetry, I/O devices and facsimile.

FRAMES – Jack frames are heavy steel, formed and press welded for added strength. Side member adds to frame rigidity and resistance to shock and vibration. Both "A" and "C" type frames can be supplied. (See next page.)

SPRINGS – A special copper alloy is used for leaf springs because it offers excellent mechanical and electrical characteristics, and good corrosion resistance. The spring alloy has special hardness and ductility, and springs are produced from custom-designed dies. Although normally adjusted to mate with telephone (and MIL-type) plugs, springs can be adjusted to mate with commercial phone plugs.

BUSHINGS – Bushings are copper alloy (except insulated jacks), drilled to accept either a standard (.250" diameter finger) plug or a popular smaller (.206" diameter finger) plug. Series M Hi-D Jax® have a threaded brass bushing, or a molded thermoplastic bushing for insulated mounting.

CONTACTS – Jack design includes "wiping" action of contacts for low resistance connections. The contacts supplied depend on the jack selected. Gold or silver plating is normally offered as an option on tip, ring and/or sleeve springs. Several precious metals and shapes are used on jacks.

Material	Shape	Description
Palladium	Welded Crossbar	Best overall combination of life, current carrying, and resistance to environment. Also known as WEco #2.
Fine silver	Riveted, button-type	Carries higher current than palladium.
Gold alloy Crossbar	Welded switching.	Recommended for dry circuit Excellent resistance to corrosion and contamination. Also known as WEco #1.
Fine silver (Large)	Riveted, button-type	Heavy currents.
Gold or Silver	Plating	For lower contact resistance (used on through circuit springs).

SOLDER LUGS TERMINALS – Lugs project out directly from rear of jack and are solder-coated for easy wiring and soldering. Offset lugs can be supplied on special order (except standard on MT-Jax®). Jacks with offset ground lugs are particularly suitable for bussing connections on jack panels. Contact Switchcraft for special order lug requirements.



STRAIGHT SOLDER LUGS

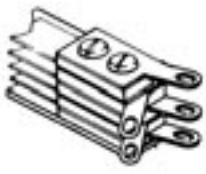

OFFSET SOLDER LUGS

WIRE-WRAPPING TERMINALS – Wire-wrapping eliminates the need for soldering. Each terminal accepts up to three wrapped wires (22 or 24 gauge, 5 wraps each), applied with standard wire-wrapping tools. Terminal base has standoff shoulder which prevents first wrapped wire from accidentally sliding down and shorting against another terminal or adjacent spring. Terminal tips are radiused to facilitate positioning of wire-wrapping tool over terminals. See page 80 for wire-wrapping data.

WIRE-WRAPPING TERMINALS

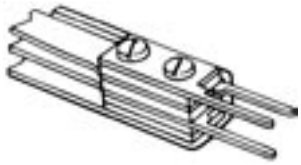

PRINTED CIRCUIT TERMINALS – Components can be supplied with printed circuit terminals on special order. Terminals can be specified in various lengths to accommodate different thicknesses of single and double sided boards, as well as multilayers, and flat flexible cable and circuitry.

PRINTED CIRCUIT TERMINALS (SPECIAL)

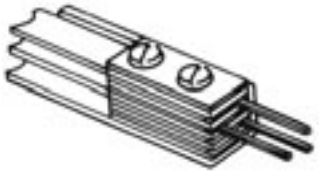

OTHER TERMINALS – Many other special terminal styles are possible. For example, where mounting permits, jacks can be supplied with stacks having right-angle terminals. Contact Switchcraft for special terminals.

CUSTOM COMPONENTS

Only the most popular types of jacks are listed.

DIMENSIONS ARE FOR REFERENCE ONLY Inch (mm)

* Please visit the product pages on our website for the most up-to-date product information

LONG FRAME TELEPHONE JACKS

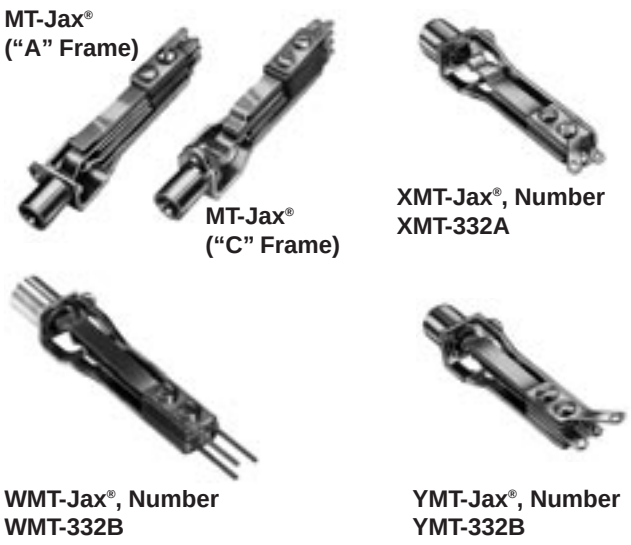

Details of Typical Buss Wiring of Jacks with Offset Ground Lugs

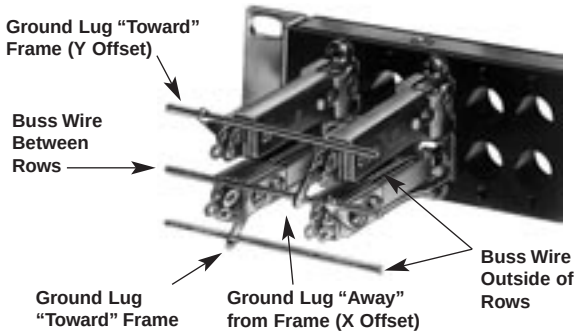

Long frame jacks are designed especially for high quality communication equipment, and to meet exacting MIL specifications, as well as telephone and communication systems. Many jacks have WEco equivalent types. MT-Jax® phone jacks are offered in four styles: MT-Jax®, WMT-Jax®, XMT-Jax® and YMT-Jax®. Rugged steel frames are produced in specially designed dies, press welded to provide rigidity and dimensional stability required by telephone and communication jack panels - and to meet MIL frame strength tests. “A” and “C” frame styles are available.

TERMINALS – Solder Lug: All MT-Jax® have solder lug terminals. Wire-Wrapping Terminals: WMT-Jax® have wire-wrapping terminals. Offset Ground Lugs: XMT-Jax® and YMT-Jax® have ground lugs, which simplify production line wiring time. A single row of jacks can be installed with a single buss wire connected to all ground lugs in a row, or when double rows are mounted on .625" vertical centers with lugs oriented between rows, holes in ground lugs line up so a single buss wire provides connections for both rows. XMT-Jax® have ground lugs oriented away and YMT-Jax® are oriented toward jack frame. See illustration.

MIL STANDARDIZATION – MIL jack types listed have been adjusted for use with plugs specified in Amendment No. 1, MIL-P-642, usually M642/1-1, M642/1-2, M642/2-1, M642/2-2, M642/4-1 or M642/4-2. When applicable, specify the plug you will use; we will adjust with that plug where the item is not a MIL-type. NOTE: MT-Jax® jacks Numbers ◊MT-342B and ◊MT-344B have shorter bushings, 0.5" long with a hold inside diameter of .21". They will mate with MIL plug M642/5-1 or M642/8-1. M642/5-1 plug (Switchcraft 480) cannot be used with ◊MT-342B or ◊MT-344B if these jacks are mounted on standard .625" thick panels. The short jack bushings are recessed .125", and the M642/5-1 is too wide to fit in the panel recess. Use plug M642/8-1 (Switchcraft 484) with a narrower diameter to fit in the recess and mate properly.

CONTACTS – Contacts on shuts and isolated switching circuits are welded crossbar palladium. Welded crossbar gold alloy contacts (WEco #1) are available on special order for dry circuit applications.

SPECIFICATIONS

Frame and Stack Screws: Plated steel, with iridescent iridite finish.
Springs: Copper alloy, spring tempered. Solder lugs are tinned.
Bushings: Plated copper alloy standard. Natural brass finish optional.
Insulation: Rigid plastic spacers (MIL-type PBE-P per Specification LP-513). One piece molded through stack.
Contacts: Welded crossbar palladium contacts in shunt and isolated switching circuits are standard. Gold alloy (WEco #1) and fine silver are available on special order.

MECHANICAL

Life: Commercial jacks: 10,000 insertion/withdrawal cycles, minimum. Military Jacks: 20,000 insertion/withdrawal cycles, minimum.
Mechanical Shock: Military Jacks – Per MIL-STD-202, method 213, Test Condition H (75g).
Vibration: Military Jacks – Per MIL-STD-202, method 213, (10-55 Hz).

ELECTRICAL

Contact Resistance: Commercial Jacks – .030 ohms maximum (initial), .050 ohms maximum (after humidity, durability exposure). Military Jacks – .010 ohms maximum (initial), .020 ohms maximum (after life), .10 ohms maximum (after salt spray).

Insulation Resistance: Commercial Jacks – 10,000 MΩ minimum (initial), 1,000 MΩ minimum (after humidity). Military Jacks – 10,000 MΩ minimum (initial), 1,000 MΩ minimum (after humidity, durability exposure).

Dielectric Withstanding Voltage: 500 V, 60 Hz (rms) AC.

ENVIRONMENTAL

Thermal Range: Commercial Jacks – -55°C to +85°C (non-operating); -20°C to +65°C (operating). Military Jacks - -55°C to +85°C (non operating); -40°C to +65°C (operating).
Thermal Shock: Commercial Jacks – Per MIL-STD-202, method 107. Military Jacks – Per MIL-STD-202, method 107.
Humidity: Commercial Jacks – Per MIL-STD-202, method 106. Military Jacks – 0% to 95% operating and non-operating.
Salt Spray: Commercial Jacks – Per MIL-STD-202, method 101. Military Jacks – Per MIL-STD-202, method 101 (48 hours).
Moisture Resistance: Military Jacks – Per MIL-STD-202, method 106 (240 hours).

ORDERING – Order jacks by part number. Additional variations in jacks are available on special order. Special circuitry, frames, contacts, natural brass bushings, as other terminals are available.

DIMENSIONS ARE FOR REFERENCE ONLY Inch (mm)

® Registered trademark of Switchcraft, Inc.
Note: Contact your Switchcraft Representative for price and delivery

* Please visit the product pages on our website for the most up-to-date product information

1/4" LONG FRAME TELEPHONE JACKS

MT-JAX® (with WEco Equivalent Jacks)[2]

Switchcraft Part Number	WEco Equiv.	MIL Type[1]	Schematic Circuit*	Dim. "X" maximum Inch (mm)	Mating Plug[3]
2-CONDUCTOR 2					
MT331	233A, 221E3	M641/2-8	I	.438 (11.1)	M642/4-1 M642/4-2 or M642/4-3
◊CMT331	223C	–	I	.438 (11.1)	
◊WMT331	223AM	–	I	.438 (11.1)	
◊WCMT331	223CM	–	I	.438 (11.1)	
◊MT332	232A, 544A4	–	II	.5 (12.7)	
◊CMT332	232C	–	II	.5 (12.7)	
MT332A	218A	M641/2-3	III	.5 (12.7)	
◊CMT332A	218C	–	III	.5 (12.7)	
◊MT332C	303A	M641/2-1	XVIII	.562 (14.3)	
MT333	215A	M641/2-6	V	.469 (11.9)	
◊CMT333	215C	–	V	.469 (11.9)	
◊MT333E	237A	–	IX	.625 (15.9)	
◊CMT333A	237C	–	IX	.625 (15.9)	
MT334A	225A, 234A	–	XI	.562 (14.3)	
◊CMT334A	225C, 234C	–	XI	.562 (14.3)	
MT334C	216A	M641/2-5	XVII	.625 (15.9)	
◊CMT334C	216C, 484C5	–	XVII	.625 (15.9)	
MT334E	217A	M641/2-7	XXV	.562 (14.3)	
◊CMT334E	217C	–	XXV	.562 (14.3)	
◊MT334F	226A	M641/2-4	XIX	.562 (14.3)	
◊CMT334F	226C	–	XIX	.562 (14.3)	
◊MT335	236A	–	XIII	.562 (14.3)	
◊CMT335	236C	–	XIII	.562 (14.3)	
◊MT336E[10]	438A	–	XXIII	.75 (19.0)	
CMT336E	438C	M641/1-2	XXIII	.75 (19.0)	
◊MT337[10]	411A	M641/2-9	XXIV	.75 (19.0)	
◊CMT337	411C	M641/1-1	XXIV	.75 (19.0)	
◊CMT351C	394C	–	XXXIII	.812 (20.6)	
◊MT352A	218J	–	III	.5 (12.7)	
◊CMT354F	361C	–	XXXIV	.75 (19.0)	

Switchcraft Part Number	WEco Equiv.	MIL Type[1]	Schematic Circuit*	Dim. "X" maximum Inch (mm)	Mating Plug[3]
3-CONDUCTOR					
MT332B	238A	M641/3-1	IV	.562 (14.3)	M642/2-1 or M642/2-2
◊CMT332B	238C	–	IV	.562 (14.3)	
WMT332B	238AM	–	IV	.562(14.3)	
◊WCMT332B	238CM	–	IV	.562 (14.3)	
MT333B	300A	–	VII	.562 (14.3)	
◊MT334B	239A	M641/3-2	XII	.562 (14.3)	
◊CMT334-B	239C	–	XII	.562 (14.3)	
WMT334B	239AM	–	XII	.578 (14.7)	
◊WCMT334B	239CM	–	XII	.578 (14.7)	
◊MT336	241A	M641/3-4	XX	.562 (14.3)	
◊CMT336	241C	–	XX	.562 (14.3)	
◊WMT336[10]	241AM	–	XX	.625 (15.9)	
◊WCMT336	241CM	–	XX	.625 (15.9)	
◊MT336A[10]	242A	M641/5-5	XIV	.688 (17.5)	
◊CMT336A	242C	–	XIV	.688 17.5)	
◊WMT336A	242AM	–	XIV	.75 (19.0)	
◊WCMT336A	242CM	–	XIV	.75 (19.0)	
◊MT336B[10]	285A	M641/3-6	XXI	.812 (20.6)	
◊CMT336B	285C	–	XXI	.812 (20.6)	
MT336C[10]	240A	M641/3-3	XXII	.688 (17.5)	
◊CMT336C	240C	–	XXII	.688 (17.5)	
◊WMT336C[10]	240AM	–	XXII	.75 (19.0)	
◊WCMT336C	240CM	–	XXII	.75 (19.0)	
◊MT336D[10]	280A	–	XXXI	.75 (19.0)	
◊CMT336D	280C	–	XXXI	.75 (19.0)	
◊WMT336D[10]	280AM	–	XXXI	.938 (23.8)	
◊WCMT336D	280CM	–	XXXI	.938 (23.8)	
◊MT338	267A	–	XXXII	.562 (14.3)	
◊CMT338	267C	–	XXXII	.562 (14.3)	
◊MT339[10]	284A6	M641/3-7	XXVII	.967 (24.6)	
◊CMT339	384C6	–	XXVII	.967 (24.6)	
◊MT342B	246A	–	IV	.563 (14.3)	M642/5-1

*Refer to page 79 and 80 for schematics.

◊ Special order only; contact Switchcraft.

1. Many jacks are offered with MIL specifications. Other jacks are made of MIL-spec materials but do not have MIL approval because no MIL type numbers have been assigned.
2. MT-Jax have nickel-plated copper alloy bushing. WEco equivalent jacks have plain copper alloy bushings (except WEco Number 221E, which has nickel-plated copper alloy bushing).
3. Mating plugs and patch cords are contained in the catalog.
4. Adjust non-short tip-ring.
5. Adjusted for plug M642/1-1 or M642/1-2.
6. Actuates differently (insulated "A" off ring instead of tip).
7. Same as MIL type M641/2-3 except with offset ground lug.
8. Same as MIL type M641/3-1 except with offset ground lug.
9. Same as MIL type M641/3-2 except with offset ground lug.
10. When mounted on "A" frames, stacks are too high to fit in standard panels with .625" horizontal space add prefix "C" to part number to order jacks with "C" frame.

MT-JAX (WITH WECO EQUIVALENT JACKS)[2]

Switchcraft Part Number	WEco Equiv.	MIL Type[1]	Schematic Circuit*	Dim. "X" maximum Inch (mm)	Mating Plug[3]
3-CONDUCTOR 2					
◊WMT342B	246 AM	–	IV	.562 (14.3)	M642/5-1 M642/5-1 or M642/2-2
MT344B	248A	–	XII	.625 (15.9)	
◊MT346	249A	–	XX	.562 (14.3)	
◊CMT346	249C	–	XX	.562 (14.3)	
◊MT354B	248E	–	XII	.625 (15.9)	
◊MT355[10]	243C	–	XXXV	.812 (20.6)10	
◊MT356C[10]	245A	–	XXXVI	.938 (23.8)10	
◊CMT356C	245C	–	XXXVI	.938 (23.8)	
◊MT357[10]	363A	–	XXXVII	.75 (19.0)10	
◊CMT358	290C	–	XXXVIII	.875 (22.2)	
◊CMT359	326C	–	XXXIX	.75 (19.0)	

DIMENSIONS ARE FOR REFERENCE ONLY Inch (mm)

* Please visit the product pages on our website for the most up-to-date product information

MT-JAX®
(Industry Standard – No WEco Equivalent)

Switchcraft Part Number	MIL Type[1]	Schematic Circuit*	Dim. "X" maximum Inch (mm)	Mating Plug[3]
2-CONDUCTOR[2]				
◊WMT332A	–	III	.5 (12.7)	M642/4-1 M642/4-2 or M642/4-3
◊WCMT332A	–	III	.5 (12.7)	
XMT332A	–	III	.5 (12.7)	
◊YMT332A	–	III	.5 (12.7)	
◊CMT332C	–	XVIII	.562 (14.3)	
◊WMT332C	–	XVIII	.5 (12.7)	
◊WMT333	–	V	.469 (11.9)	
◊WCMT333	–	V	.469 (11.9)	
◊MT333A	–	VI	.967 (24.6)	
◊WMT333E	–	IX	.625 (15.9)	
◊WMT334A	–	XI	.562 (14.3)	
◊WMT334C	–	XVII	.562 (14.3)	
◊WMT334E	–	XXV	.562 (14.3)	
◊WMT334F	–	XIX	.641 (16.3)	
◊WMT335[10]	–	XIII	.688 (17.5)	
◊WCMT335	–	XIII	.688 (17.5)	
MT335A[10]	M641/2-2	XXVI	.75 (19.0)	
◊CMT335A	–	XXVI	.75 (19.0)	
◊WMT335A	–	XXVI	.75 (19.0)	
◊WCMT335A	–	XXVI	.75 (19.0)	
◊WMT336E[10]	–	XXIII	.875 (22.2)	
◊WCMT336E	–	XXIII	.875 (22.2)	
◊CMT341	–	I	.438 (11.1)	

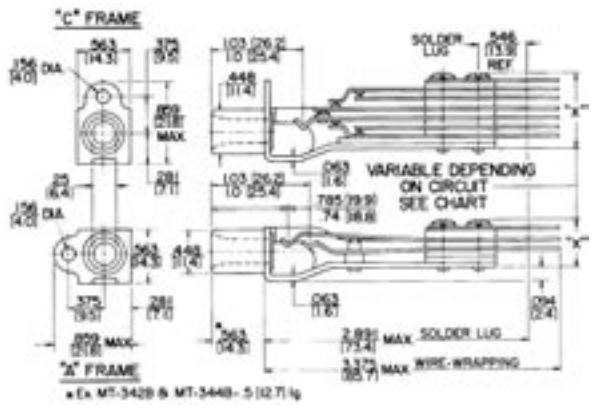

MT-Jax® and WMT-Jax®

MT-JAX®
(Industry Standard – No WEco Equivalent)

Switchcraft Part Number	MIL Type[1]	Schematic Circuit*	Dim. "X" maximum Inch (mm)	Mating Plug[3]
3-CONDUCTOR[2]				
XMT332B	–	IV	.562 (14.3)	M642/2-1 or M642/2-2
◊YMT332B	–	IV	.562 (14.3)	
◊CMT333B	–	VII	.562 (14.3)	
◊WMT333B	–	VII	.562 (14.3)	
XMT334B	–	XII	.562 (14.3)	
◊YMT334B[10]	–	XII	.562 (14.3)	
◊WMT336B	–	XXI	.812 (20.6)	
◊WCMT336B	–	XXI	.812 (20.6)	
◊MT343B	–	VII	.5 (12.7)	
◊CMT342B	–	IV	.562 (14.3)	M642/5-1
◊CMT344B	–	XII	.625 (15.9)	
◊WMT344B	–	XII	.625 (15.9)	
◊MT346A[10]	–	XIV	.688 (17.5)	
◊MT346B[10]	–	XXI	.812 (20.6)	
◊MT346C[10]	–	XXII	.688 (17.5)	M642/5-1 or M642/2-2[1]
◊CMT346C	–	XXII	.688 (17.5)	

*Refer to pages 79 and 80.

◊ Special order only; contact Switchcraft.

1. Many jacks are offered with MIL specifications. Other jacks are made of MIL-spec materials but do not have MIL approval because no MIL type numbers have been assigned.
2. MT-Jax have nickel plated copper alloy bushing. WEco equiv. jacks have plain copper alloy bushings (except WEco No. 221E, which has nickel plated copper alloy bushing).
3. Mating plugs and patch cords are contained in this catalog.
7. Same as MIL type M641/2-3 except with offset ground lug.
8. Same as MIL type M641/3-1 except with offset ground lug.
9. Same as MIL type M641/3-2 except with offset ground lug.
10. When mounted on "A" frames, stacks are too high to fit in standard panes with .625" horizontal space add prefix "C" to part number to order jacks with "C" frame.

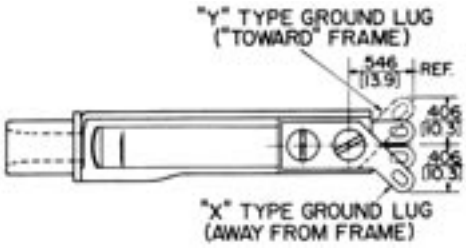

MT-Jax®, Offset Lugs

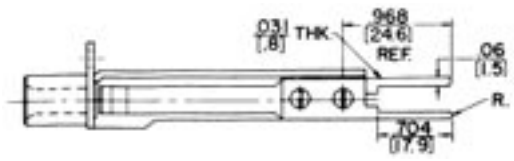

MT-Jax®,Wire-Wrapping Detail

DIMENSIONS ARE FOR REFERENCE ONLY Inch (mm)

® Registered trademark of Switchcraft, Inc.
Note: Contact your Switchcraft Representative for price and delivery

* Please visit the product pages on our website for the most up-to-date product information

1/4" LONG FRAME TELEPHONE TWIN JACKS



MT389



MT388



WMT389

High quality telephone jacks are essentially doubled versions of MT-Jax®. Twin-Jax® are used in Switchcraft Series 2400, 2600 and JP® Jack Panels and other standard jack panels. Twin-Jax® have direct WEco equivalents.

MT388 AND WMT388

Frame mounting ears are on 1.375" centers, and bushings are on .625" centers. Jacks are double, 2-conductor type with a crossover wiring feature. If a mating plug is inserted in either bushing, crossover contacts are opened (see schematic). MT388 (solder lugs) is equivalent to WEco jack 410A, 410C and 410D. WMT388 (wire-wrapping) is equivalent to WEco 410AM.

MT389 AND WMT389

Double, 3-conductor jacks with both the tip and ring circuits interconnected (crossover wired) so if a plug is inserted in either jack, common circuits are opened (see schematic). MT-389 (solder lugs) is equivalent to WEco 482A. WMT389 (wire-wrapping) is equivalent to WEco 482AM and 482BM.

SPECIFICATIONS

Frame and Stack Screws: Steel, plated with iridescent iridite finish.
Springs: Copper alloy, spring tempered. Solder lugs are solder coated.
Bushings: Nickel-plated copper alloy.
Contacts: Welded crossbar palladium in shunt circuits.
Insulation: Rigid plastic (MIL-type PBE-P, per MIL Specification LP-513C). Extruded plastic insulating tubing through stack.

ORDERING

Order by part number from table.

Part Number[1]	Adjusted for Plug	Dim. "X" max. Inch (mm)
MT388	WEco types 298B and 347B MIL types M642/9-1 and M642/1-1	.562 (14.3)
◊**WMT388**	Switchcraft types 411, 412, 413, 420	.562 (14.3)
MT389	WEco type 310 MIL types M642/2-1 and M642/2-2	.594 (15.1)
WMT389	Switchcraft types 414 and 482	.562 (14.3)

◊ Special Order only; contact Switchcraft.
1. Number MT388 is equivalent to MIL-type M641/11-1
2. Complete data for telephone and MIL-type plugs are contained in this section.
Mounting Screws: #6-32, Part Number P10725, can be ordered separately. Contact Switchcraft. (Screws not supplied with jacks).

SCHEMATIC CIRCUITS

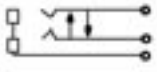

MT388 and WMT388

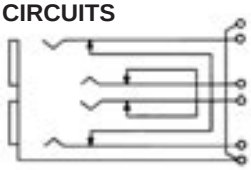

MT389 and WMT389

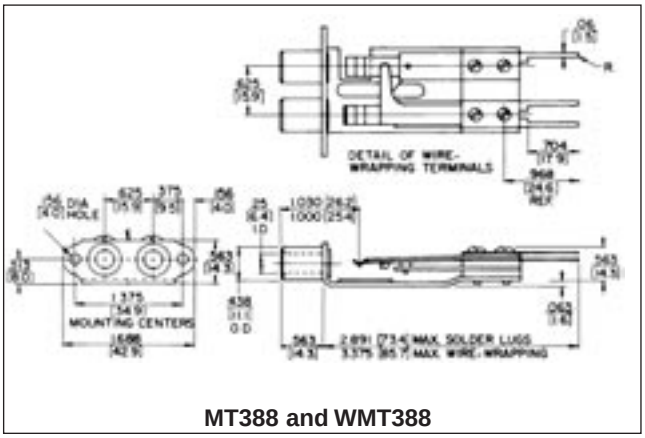

MT388 and WMT388

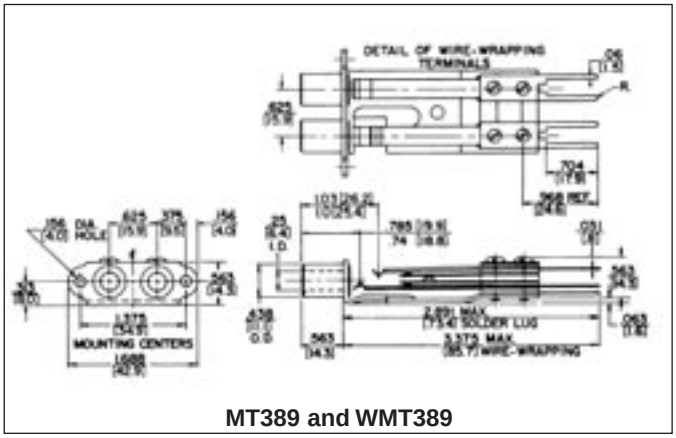

MT389 and WMT389

DIMENSIONS ARE FOR REFERENCE ONLY Inch (mm)

* Please visit the product pages on our website for the most up-to-date product information

1/4" JACK BLOCKS

DUAL-JAX BLOCK®



Dual-Jax Blocks are ideal where limited jack connections are needed but larger jack panels are not required. Designed for broadcasting, intercom and PA systems, switchboards, and commercial, industrial and military communications equipment. Dual-Jax Blocks mount in panels or chassis, either singularly or in multiples. Four countersunk holes accommodate four #8-32 screws (not supplied) for block mounting. Blocks can be supplied without jacks, or with MT-Jax® installed. Many other jacks including, T-Jax®, T-Switch® switches and lamp jacks can be installed. Jacks with wire-wrapping terminals or offset lugs can also be supplied. By drilling additional holes, Twin-Jax® may also be used. Contact Switchcraft for any special order items.

SPECIFICATIONS

Block: Molded black thermoplastic.
Screws: #6-20 plated steel, QQ-P-416, Type II, Class 2 (for jack mounting).

ORDERING

Order by part number from table.

Part Number	Description
2300	Block, without jacks.
2331	Two, MT331 MT-Jax installed.
2332A	Two, MT332A MT-Jax installed.
2332B	Two, MT332B MT-Jax installed.
◊**2333**	Two, MT333 MT-Jax installed.

◊ Special order only; contact Switchcraft for price and delivery.
Mounting Screws: #6-20, P1544, can be ordered separately, contact Switchcraft.

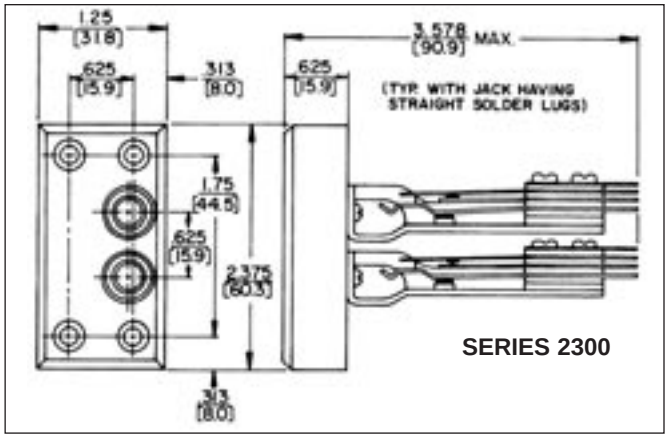

DIMENSIONS ARE FOR REFERENCE ONLY Inch / (mm)

® Registered trademark of Switchcraft, Inc.
Note: Contact your Switchcraft Representative for price and delivery

* Please visit the product pages on our website for the most up-to-date product information

TT-JAX® (.173") TELEPHONE JACKS BANTAM TYPE®



TT36
STEEL FRAME



TT32BDC
DIE-CAST FRAME
(special order only)



TT36FM
FRONT MOUNT



WTT636C
THREADED BUSHING

FEATURES

- Steel (standard) or die-cast frames (special order).
- 2-or 3-conductors.
- Palladium crossbar welded contacts are standard in switching circuits. Fine silver or gold alloy contacts are available on special order.
- Series TT30, TT30FM and TT600 - solder lugs; Series WTT-30, WTT30FM and WTT600FM -wire-wrapping terminals. Bussing solder lugs are available on special order.
- Series TT30 and WTT30 jacks mounts in Series 1600, A1600, B1600 and C1600 jacks panels.
- Series TT30FM and WTT30FM jacks mount in Series TT51, TT52, TT55 and TT56 jack panels.
- Series TT600 and WTT600 jacks mount in .25" diameter holes in panels up to .281" thick. Mounting centers: .438".
- Add “N” for nickel-plated frame and “Y” or for offset solder lugs.

SWITCHCRAFT VS. MIL NUMBERS

Jack Number	MIL Spec. Number
TT32B	641/19-2
TT32BFM	641/19-6
TT34B	641/19-4
TT34BFM	641/19-8
TT36C	641/19-10
WTT32B	641/19-1
WTT32BFM	641/19-5
WTT34B	641/19-3
WTT34BFM	641/19-7
WTT36C	641/19-9

Part Numbers, Jack with Solder Lugs								
Series TT30		Series TT30FM		Series TT600				
Steel	Die Cast	Steel	Die Cast	Steel	Schem.[1]	Dim. “X” Max. In (mm)[2]	Cond.	Typical Mating Plug[3]
TT31	◊TT31DC	TT31FM	◊TT31FMDC	TT631	I	.422 (10.7)	2	TT251
TT32A	◊TT32ADC	TT32AFM	◊TT32AFMDC	TT632A	III	.406 (10.3)	2	TT251
TT32B	◊TT32BDC	TT32BFM	◊TT32BFMDC	◊TT632B	IV	.578 (14.68)	3	TT253
TT32C	◊TT32CDC	◊TT32CFM	◊TT32CFMDC	◊TT632C	XVIII	.422 (10.7)	2	TT251
TT33	◊TT33DC	TT33FM	◊TT33FMDC	◊TT633	V	.578 (14.7)	2	TT251
◊TT33B	◊TT33BDC	◊TT33BFM	◊TT33BFMDC	◊TT633B	VII	.484 (12.3)	3	TT253
TT34A	◊TT34ADC	◊TT34AFM	◊TT34AFMDC	◊TT634A	XI	.547 (13.9)	2	TT251
TT34B	◊TT34BDC	TT34BFM	◊TT34BFMDC	TT634B	XII	.578 (14.68)	3	TT253
TT34C	◊TT34CDC	TT34CFM	◊TT34CFMDC	◊TT634C	XVII	.547 (13.9)	2	TT251
TT34F	◊TT34FDC	–	–	–	XIX	.609 (15.5)	2	TT251
TT35	◊TT35DC	◊TT35FM	◊TT35FMDC	◊TT635	XIII	.609 (15.5)	2	TT251
TT36	◊TT36DC	◊TT36FM	◊TT36FMDC	◊TT636	XX	.609 (15.5)	3	TT253
TT36A	◊TT36ADC	TT36AFM	◊TT36AFMDC	TT636A	XIV	.625 (15.9)	3	TT253
TT36B	◊TT36BDC	–	–	–	XXI	.703 (17.9)	3	TT253
TT36C	◊TT36CDC	TT36CFM	◊TT36CFMDC	◊TT636C	XXII	.625 (15.9)	3	TT253

Part Numbers, Jack with Wire Wrapping Terminals								
Series WTT30		Series WTT30FM		Series WTT600				
Steel	Die Cast	Steel	Die Cast	Steel	Schem.[1]	Dim. “X” Max. In (mm)[2]	Cond.	Typical Mating Plug[3]
WTT31	◊WTT31DC	WTT31FM	◊WTT31FMDC	WTT631	I	.422 (10.7)	2	TT251
WTT32A	◊WTT32ADC	WTT32AFM	◊WTT32AFMDC	WTT632A	III	.406 (10.3)	2	TT251
WTT32B	◊WTT32BDC	WTT32BFM	◊WTT32BFMDC	WTT632B	IV	.578 (14.68)	3	TT253
◊WTT32C	◊WTT32CDC	◊WTT32CFM	◊WTT32CFMDC	◊WTT632C	XVIII	.422 (10.7)	2	TT251
WTT33	◊WTT33DC	WTT33FM	◊WTT33FMDC	◊WTT633	V	.578 (14.7)	2	TT251
◊WTT33B	◊WTT33BDC	◊WTT33BFM	◊WTT33BFMDC	◊WTT633B	VII	.484 (12.3)	3	TT253
◊WTT34A	◊WTT34ADC	◊WTT34AFM	◊WTT34AFMDC	◊WTT634A	XI	.547 (13.9)	2	TT251
WTT34B	◊WTT34BDC	WTT34BFM	◊WTT34BFMDC	WTT634B	XII	.578 (14.68)	3	TT253
–	–	–	–	◊WTT634C	XVII	.547 (13.9)	2	TT251
◊WTT35	◊WTT35DC	◊WTT35FM	◊WTT35FMDC	◊WTT635	XIII	.609 (15.5)	2	TT251
◊WTT36	◊WTT36DC	◊WTT36FM	◊WTT36FMDC	◊WTT636	XX	.609 (15.5)	3	TT253
◊WTT36A	◊WTT36ADC	◊WTT36AFM	◊WTT36AFMDC	◊WTT636A	XIV	.625 (15.9)	3	TT253
WTT36C	◊WTT36CDC	WTT36CFM	◊WTT36CFMDC	◊WTT636C	XXII	.625 (15.9)	3	TT253

◊ Special order only.
1. See schematic diagrams.
2. “X” dimension of die cast frame jacks may be slightly greater.
3. See Mating Plugs Section.

DIMENSIONS ARE FOR REFERENCE ONLY Inch (mm)

* Please visit the product pages on our website for the most up-to-date product information

TT-JAX® (.173") TELEPHONE JACKS BANTAM TYPE®

SPECIFICATIONS

Frame: Plated (steel or zinc diecast).
Stack Screws: Steel plated.
Bushing: Plated (brass or steel).
Tip and Ring Springs: Copper alloy.
Contact Spring: Copper alloy.
Contacts: Welded crossbar palladium. Other alloys in various sizes available on special order.
Insulation: Rigid plastic with plastic tubing through stack assembly.

MOUNTING HARDWARE

Series TT30: #3-48 x 1/4"; mounting screws, P10834, can be ordered separately.
Series TT30FM: Supplied with one #3-48 x 1⁄4" fil. head machine screw, steel-plated.
Series TT600: Supplied with one P1975, nickel-plated copper alloy locknut, and one S3997, steel, nickel-plated washer.

NOTE: Dimensional drawings show panels with steel frame jacks. Overall dimensions for steel or die-cast frame jacks are the same, except as noted.

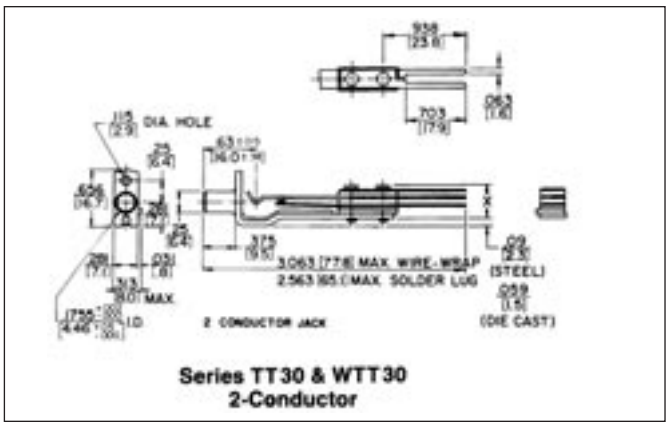

Series TT30 & WTT30
2-Conductor

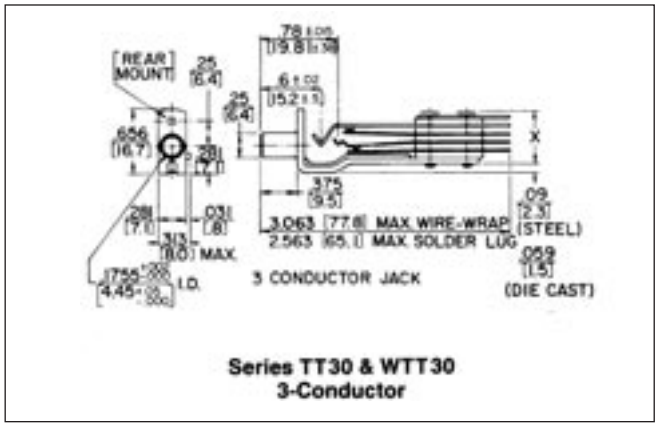

Series TT30 & WTT30
3-Conductor

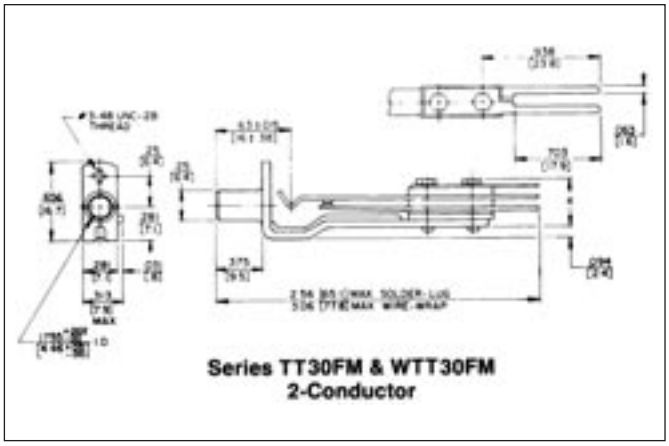
Series TT30FM & WTT30FM
2-Conductor

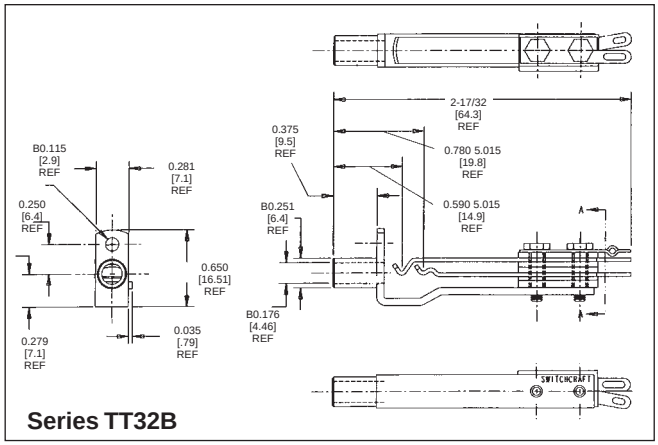

Series TT32B

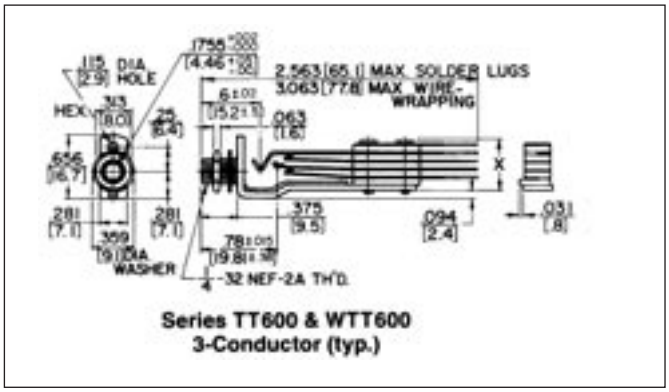

Series TT600 & WTT600
3-Conductor (typ.)

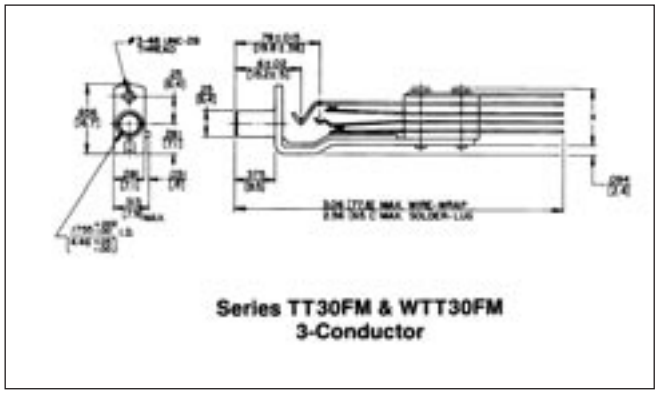
Series TT30FM & WTT30FM
3-Conductor

DIMENSIONS ARE FOR REFERENCE ONLY Inch (mm)

® Registered trademark of Switchcraft, Inc.
Note: Contact your Switchcraft Representative for price and delivery

* Please visit the product pages on our website for the most up-to-date product information

TT-JAX® (.173") TELEPHONE TWIN JACKS BANTAM TYPE®

FEATURES

- Steel or die-cast frames. (Special order only).
- Twin, 3-conductor jacks on .312" centers, inter-connected so circuit is opened when a mating plug is inserted in one side of the jack. Palladium welded crossbar contacts are standard in switching circuits.
- Solder lugs or wire-wrapping terminals.
- TT89, TT89C, WTT89 and WTT89DC jacks mount in Series 1700 jack panels.
- TT89FM, TT89FMDC, WTT89FM and WTT89FMDC jacks mount in Series TT59, TT60, TT61 and TT62 jack panels.

SPECIFICATIONS

Frame: Plated (steel or diecast zinc).

Stack Screws: Steel-plated.

Bushing: Plated (steel or copper alloy).

Tip, Ring and Contact Springs: Copper alloy.

Contacts: Welded crossbar palladium. Other alloys in various sizes available on special order.

Insulation: Rigid plastic with plastic tubing through stack assembly.

Mounting Hardware: #3-48 x 1/4" mounting screws, P10834, can be ordered separately for TT89, TT89DC, WTT89 and WTT89DC jacks. Two mounting screws, P25424, are supplied with TT89FM, TT89MDC, WTTFM and WTT89FMDC jacks.

NOTE: Dimensional drawings show panels with steel frame jacks. Overall dimensions for steel or die-cast frame jacks are the same.

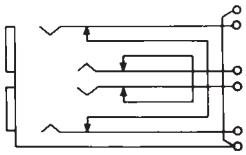

TT89 SCHEMATIC

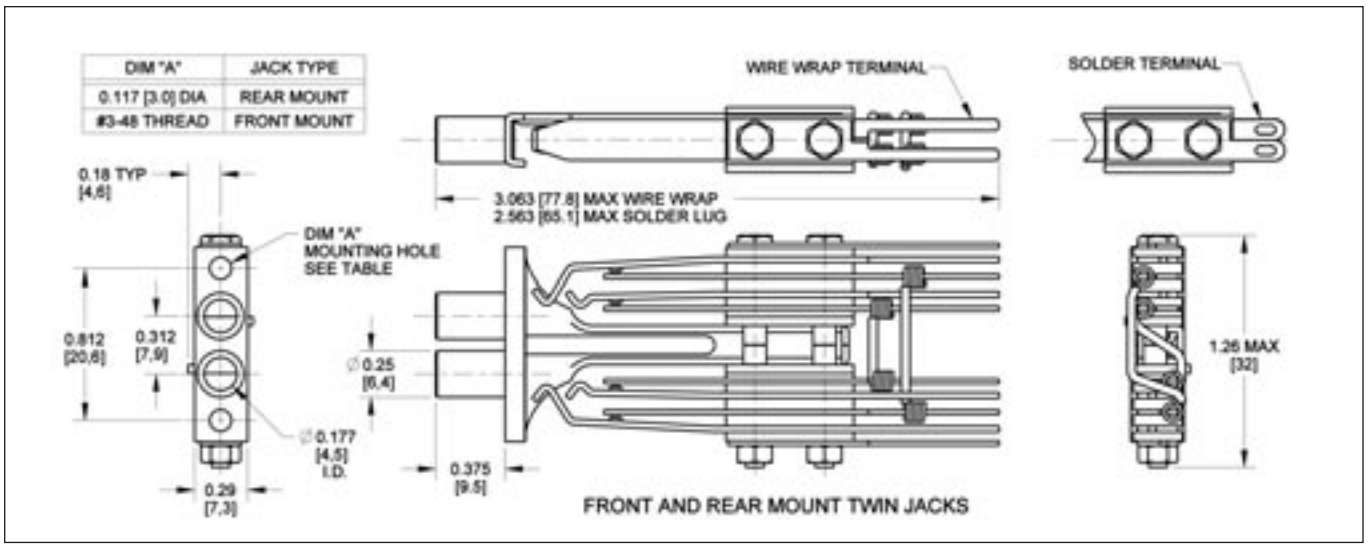

Solder Lugs		Wire-Wrapping Terminals		Conductors	Typical Mating Plug[1]
Steel	Die Cast	Steel	Die Cast		
TT89	**◊TT89DC**	**WTT89**	**◊WTT89DC**	Twin 3-conductor	TT263
TT89FM	**◊TT89FMDC**	**WTT89FM**	**◊WTT89FMDC**		TT263

1. See Mating Plugs Section.
◊ Special order only

DIMENSIONS ARE FOR REFERENCE ONLY Inch (mm)

* Please visit the product pages on our website for the most up-to-date product information

TT-JAX® (.173") TELEPHONE TRIPLE JACKS BANTAM TYPE®

FEATURES

- Steel or die-cast frames.
- **TT95 Tri-Jax® Jacks:** three, 3-conductor jacks on one frame. Twin jacks, (on .312" centers, LINE & EQUIPMENT functions), have strapped shunts installed. The third jack (MONITOR) is unwired. See TT95 schematic.
- **TT96 Tri-Jax Jacks:** Same as TT95 jacks, except third jack (MONITOR) has tip and ring springs, respectively, jumpered to tip and ring springs of top (LINE) jack.
- Selection of solder lugs or wire-wrapping terminals.
- Palladium welded crossbar contact are standard in switching circuits.
- TT95, TT95DC, WTT95 and WTT95DC jacks mount in Series B1700 jack panels.
- TT95FM, TT95FMDC, TT96FM, TT96FMDC and wire-wrapping versions mount in Series TT53, TT54, TT57 and TT58 jack panels.

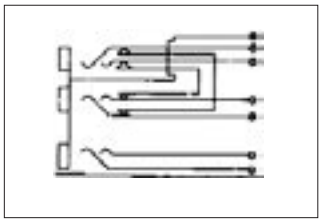

TT95 SCHEMATIC

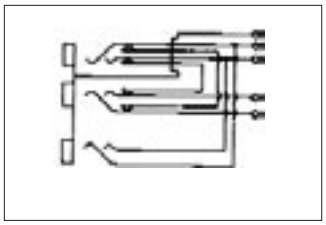

TT96 SCHEMATIC

Solder Lugs		Wire-Wrapping Terminals		Conductors	Schematic	Typical Mating Plug'
Steel	Die Cast	Steel	Die Cast			
TT95	◊TT95DC	WTT95	◊WTT95DC	3	TT95	TT253
TT95FM	◊TT95FMDC	WTT95FM	◊WTT95FMDC	Plus	TT95	and
TT96FM	◊TT96FMDC	WTT96FM	◊WTT96FMDC	Twin-3	TT96	TT263

◊ Special order only

SPECIFICATIONS

Frame: Plated (steel or diecast)
Stack Screws: Stainless Steel Plated.
Bushings: Plated (steel or copper alloy).
Contact Springs: Copper alloy.
Contacts: Welded crossbar palladium. Other precious metal alloys in various sizes available on special order.

Mounting Hardware: #3-48 x 1/4" mounting screws, P10834, can be ordered separately for rear mount jacks. Two mounting screws, P25424, are supplied with front mount jacks.

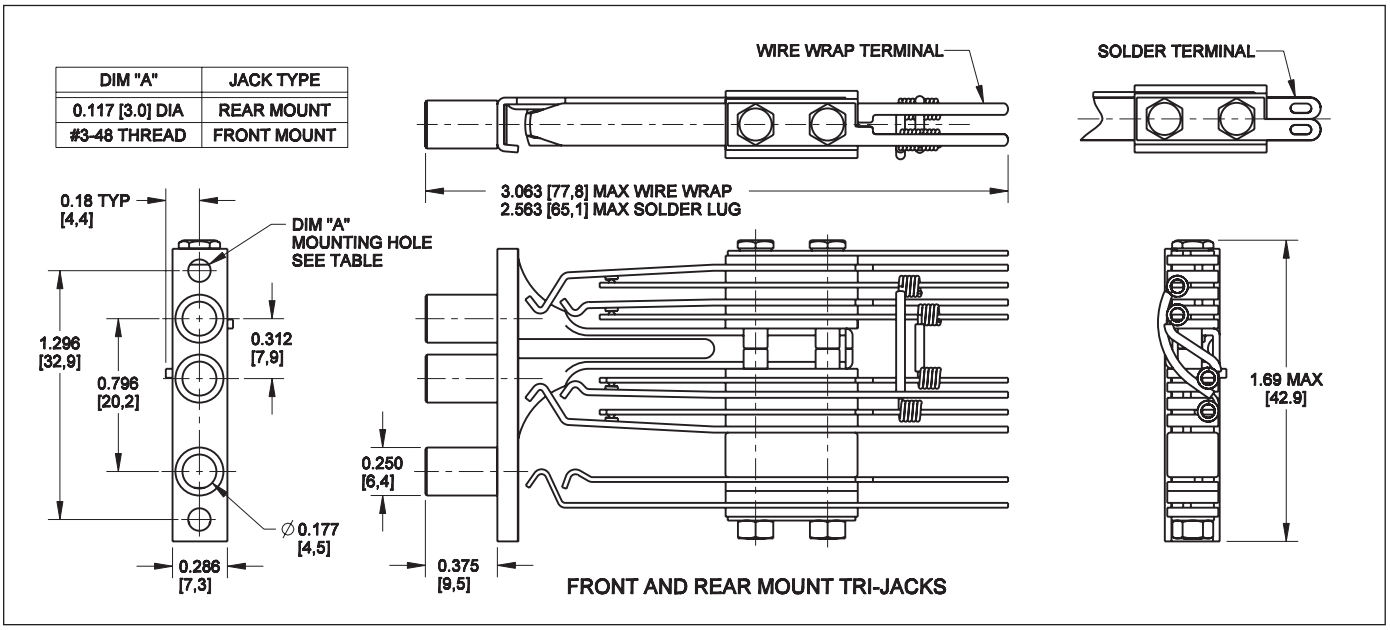

DIMENSIONS ARE FOR REFERENCE ONLY Inch (mm)

® Registered trademark of Switchcraft, Inc.
Note: Contact your Switchcraft Representative for price and delivery

* Please visit the product pages on our website for the most up-to-date product information

MINIATURE TELEPHONE JACKS, RIGHT ANGLE, PC MOUNT

RTT34B02
COVER P286302





CLOSE-UP OF "Snap-In" TERMINAL



RTT8702
COVER P286402

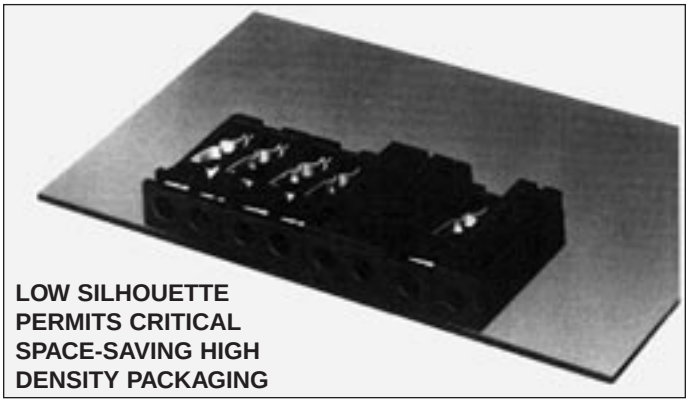

LOW SILHOUETTE PERMITS CRITICAL SPACE-SAVING HIGH DENSITY PACKAGING

Right-angle miniature phone jacks provide low-profile packaging. Single and twin 3-conductor jacks provide plug-jack access to communication circuits for patching and/or testing. Tips and rings are shunted. These jacks mate with Switchcraft miniature TT® plugs and patch cords.

Jacks are designed for right-angle mounting on .062" (1.6 mm) maximum thickness PC boards. Snap-on covers in colors are available and can be installed or removed in the field without special tools. Covers and jacks may be ordered in different colors for color coded circuits.

SPECIFICATIONS

ELECTRICAL

Dielectric Withstanding Voltage: 500 V AC
Contact Resistance: .020 Ω maximum (initial), .030 Ω maximum (after life test).
Insulation Resistance: 10^{10} Ω at 500 V DC (initial).

MECHANICAL

Shock: MIL-STD 202 Method 213.
Vibration: MIL-STD 202 Method 201.
Insertion Force: 7 pounds maximum (31.14 N).
Withdrawal Force: 1.5 pounds minimum (6.67 N).
Life: 10,000 cycles.

MATERIALS

Housing: Thermoplastic UL 94V-0.
Springs: Copper alloy, plated.
Contacts: Gold alloy (WEco #1) crossbar.

ENVIRONMENTAL

Temperature Limits: -55°C to +85°C (non-operating).
Thermal Shock: MIL-STD 202 Method 107.
Salt Spray: MIL-STD 202 Method 101.
Humidity: MIL-STD 202 Method 106, less steps 7A and 7B.

ORDERING INFORMATION

Jack Part No.	Cover Part No.	Color	Schem.	Cond.	Typical Mating Plug[2]
RTT34B01	**◊P286301**	Red	XII	3	TT-253
RTT34B02	**P286302**	Black			
RTT34B04	**◊P286304**	Blue			
RTT34B05	**P286305**	White			
◊RTT34B07	**◊P286307**	Orange			
◊RTT34B08	**◊P286308**	Yellow			
RTT8701	**◊P286401**	Red	Twin XII	Twin 3	TT-263
RTT8702	**P286402**	Black			
RTT8704	**◊P286404**	Blue			
RTT8705	**P286405**	White			
◊RTT8707	**◊P286407**	Orange			
◊RTT8708	**◊P286408**	Yellow			

1. See schematic diagrams on pages 79 and 80.
2. See Mating Plugs Section.
◊ Special order only; contact Switchcraft for price and delivery.

ORDERING

1. Order jacks and covers separately from table.
2. Covers can be ordered assembled on special order.
3. To order RTT jack with cover installed, add the letter C after RTT in part number. Special order only.
4. To order RTT jack with Snap-in terminals, add the letter S to the end of the part number. Special order only.
5. For all special orders items, contact Switchcraft.

RTT JACK PART NUMBERING SYSTEM

Series	Cover Option	Circuitry	Jack Color
RTT Right Angle TT Jack	Blank- No Cover Standard	34B- XII	01- Red
	C- Cover Supplied	87- Two XII Circuits	02- Black
			04- Blue
			05- White
			07- Orange
			08- Yellow

DIMENSIONS ARE FOR REFERENCE ONLY Inch (mm)

* Please visit the product pages on our website for the most up-to-date product information

MINIATURE TELEPHONE JACKS, RIGHT ANGLE, PC MOUNT (continued)

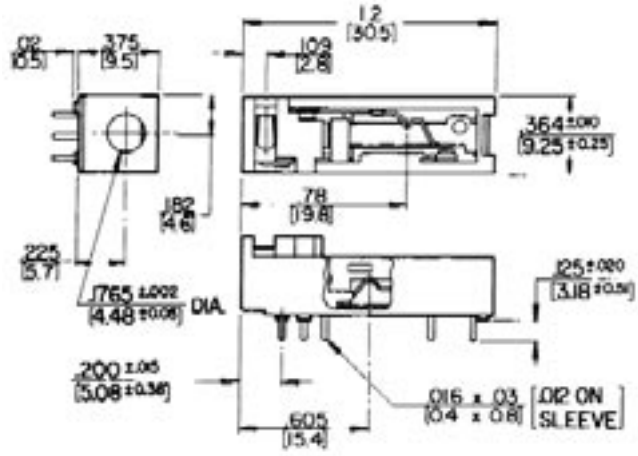

No. RTT34B (Less cover)

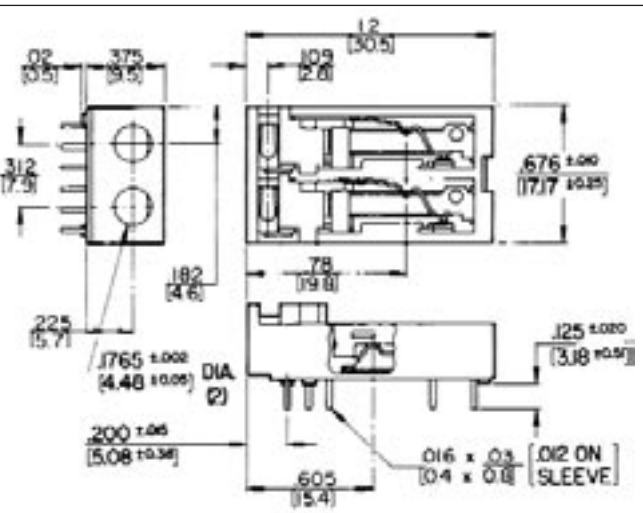

No. RTT87 (Less cover)

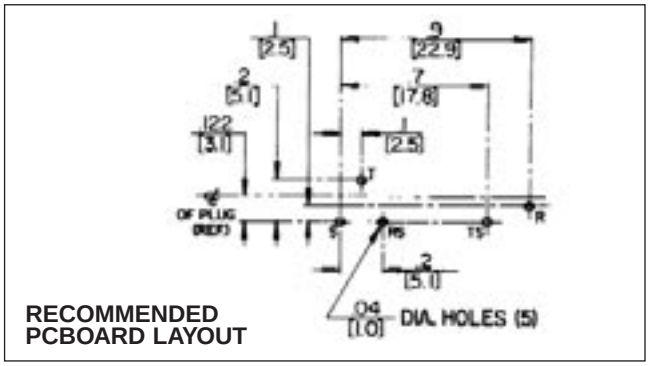

RECOMMENDED
PCBOARD LAYOUT

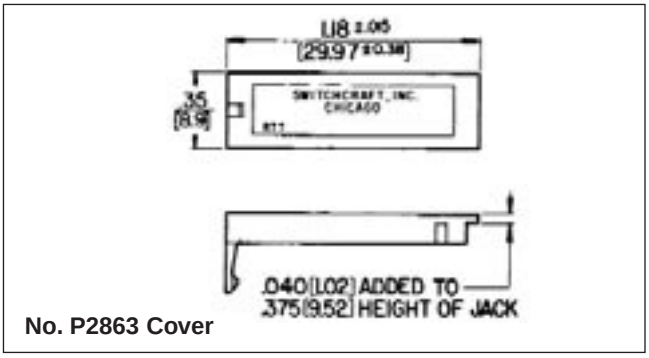

No. P2863 Cover

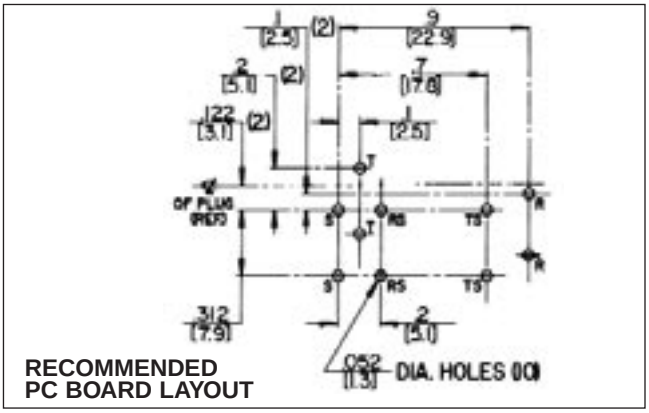

RECOMMENDED
PC BOARD LAYOUT

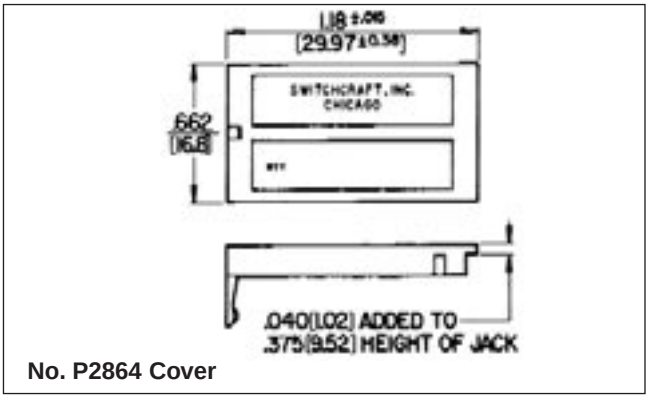

No. P2864 Cover

DIMENSIONS ARE FOR REFERENCE ONLY Inch (mm)

® Registered trademark of Switchcraft, Inc.
Note: Contact your Switchcraft Representative for price and delivery

* Please visit the product pages on our website for the most up-to-date product information

.177" ENCLOSED JACKS

Two- and 3-conductor Unijax® jacks have advanced features of Hi-D Jax® jacks including chassis/panel and PC mounting and .177" bushing that mates with a variety of tini-telephone® plugs and patchcords. Bushing diameter is .281" inside diameter; panel thickness is .125". Mounts in rows or arrays on .469" centers.

UJ4B



SPECIFICATIONS

MECHANICAL

Insertion/Withdrawal: 2-conductor, 1.25 pounds nominal, 3 pounds maximum insertion. 3-conductor, 1.5 pounds nominal, 3 pounds maximum insertion. 2-conductor, 3 pounds nominal, 1.5 pounds minimum withdrawal. 3-conductor, 3 pound nominal, 1.5 pounds minimum withdrawal.
Life: 10,000 insertion/withdrawal cycles minimum.

ELECTRICAL

Contact Resistance: .10 ohms maximum.
Insulation Resistance: 1,000 MΩ minimum.
Dielectric Withstanding Voltage: 500 V AC maximum.

MATERIAL

Housing: Thermoplastic.
Mounting Bushing: Nickel-plated copper alloy.
Tip and Ring Springs: Copper alloy, silver-plated. Integral contacts.
Shunt Springs: Copper alloy, silver-plated integral contacts.
Sleeve Terminal: Steel, tin-plated.
Hardware: Supplied with one, Number P2060 nickel-plated copper alloy locknut, and one, Number P2061 nickel-plated copper alloy washer.

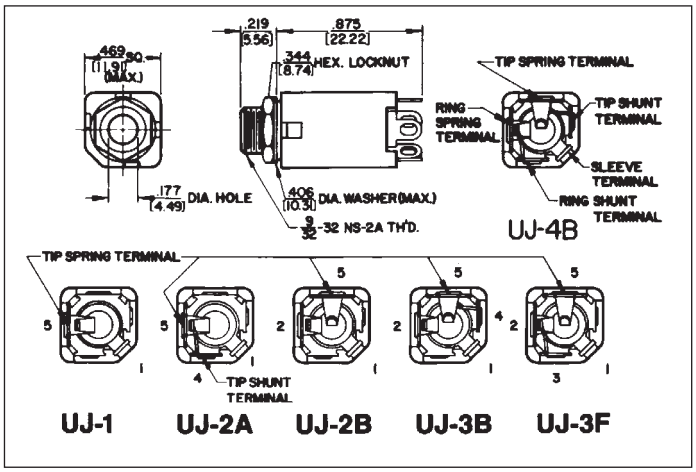

TWO CONDUCTOR PART NUMBERS

Part Number	Description	Jack Schematic[1]	Typical Mating Plug[2]
UJ1	Open circuit	I	TT251
UJ2A	Single closed circuit	III	TT251

THREE CONDUCTOR PART NUMBERS

UJ2B	Double Open circuit	IV	TT253
UJ4B	Double closed circuit	XII	TT253

1. See jack schematics on pages 79 and 80.
2. See Mating Plugs Section.

DIMENSIONS ARE FOR REFERENCE ONLY Inch (mm)

* Please visit the product pages on our website for the most up-to-date product information

1/4" PHONE JACKS



LITTEL-JAX® COMMERCIAL PHONE JACKS 2- AND 3-CONDUCTOR

Littel-Jax phone jacks mate with standard commercial phone plugs and are available with .25" and .21" inside diameter bushings.

MIL LITTEL-JAX® PHONE JACKS 2- AND 3-CONDUCTOR MIL-SPEC, MIL-J-641 (E)

MIL jacks mate with MIL-type phone plugs with .25" (6.35mm) or .21" (5.34mm) diameter bushings. Numbers C11 and C12B have a non-turn locating pin which keys the jack to the mounting surface. For low contact resistance applications, jack number C12A has fine silver contacts on shunts and tip springs.

MOUNTING

Chassis/Panel: See Mounting Data drawing below; smallhole is required only for jacks numbers C11 and C12B with non-turn locating pin.
Maximum Panel Thickness: .156" (4mm) for standard .276" (7mm) long bushing; .25" (6.35mm) for .375" (9.5mm) long bushing.
NOTE: For panels thicker than .25" see Thick Panel Phone Jax.
Insulated Mount: See drawing. S1028 flatwasher and **Part Number S1029** shoulder washer must be ordered separately for mounting in .437" diameter hole.
NOTE: See Hi-D Jax® for jack specifically designed for insulated mounting without additional washers.
PC Board Mounting: See Recommended PC Board Layout drawing below for jacks with PC terminals. Recommended PC board thickness is .062".
Mounting Centers: 1.188" (30mm) recommended. Centers may vary with jack selected, for example, Number 11 mounts on .813" (20.6mm) and 14B mounts on 1.125" (28.6mm) minimum centers.

PREFIX OPTIONS		SERIES	CIRCUITRY
Blank-	1/4" Commercial Jack	1-Littel Jax®	1- I
C-	Accepts Mill Plug		2A- III
FA-	.205" Faston Terminals		2B- IV
FAL-	.205" Faston Terminals and .375" Long Bushing		3- V
L-	.375" Long Bushing		3A- VI
PC-	PC Terminals		3B- VII
S-	Accepts .206 Diameter Plugs		3E- IX
			4B- XII

TWO CONDUCTOR PART NUMBERS

Part Number	Description	Jack Schematic[1]	Typical Mating Plug
11	Open circuit	I	250
C11	MIL Number M641/6-1	I	440
FA11	.205 inch FASTON terminal	I	250
FAL11	.375 inch long bushing .205 FASTON terminal	I	250
L11	.375 inch long bushing	I	250
12A	Tip shunt	III	250
C12A	MILNumber M641/12-1	III	440
L12A	.375 inch long bushing	III	250
PC12A	PC board mount	III	250
13	Isolated “make” circuit	V	250
13A	Transfer circuit	VI	250
13E	Isolated “break” circuit	IX	250

THREE CONDUCTOR PART NUMBERS

12B	Double open circuit	IV	267
L12B	.375 inch long bushing	IV	267
C12B	MIL number M641/5-1, .250 inch inside diameter	IV	480
13B	Tip shunt	VII	267
14B	Double closed circuit	XII	267

PART NUMBERS (.210" INSIDE DIAMETER BUSHING)

S11	2 conductor	I	S250
S12A	2 conductor	III	S250
S12B	3 conductor	IV	S267
S13B	3 conductor	VII	S267

1. Refer to jack schematics on pages 79 and 80. Other circuits are available; contact factory.

STEREO JACK CONNECTIONS

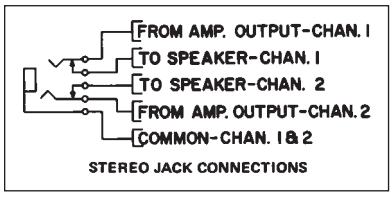

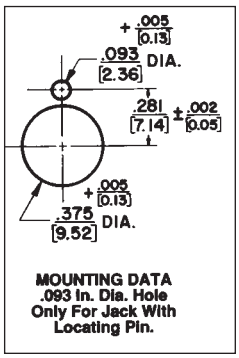

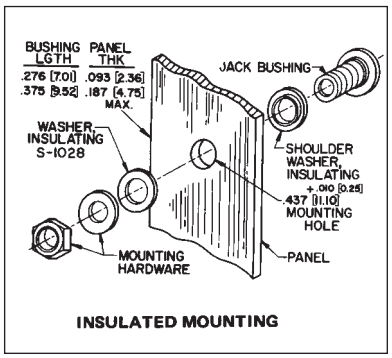

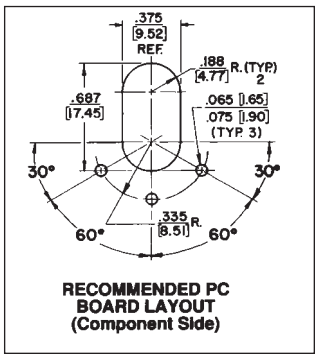

DIMENSIONS ARE FOR REFERENCE ONLY Inch (mm)

® Registered trademark of Switchcraft, Inc.
Note: Contact your Switchcraft Representative for price and delivery

* Please visit the product pages on our website for the most up-to-date product information

1/4" PHONE JACKS (continued)

LITTEL-JAX® COMMERCIAL PHONE JACKS - 2- AND 3-CONDUCTOR AND MIL LITTEL-JAX® PHONE JACKS - 2- AND 3-CONDUCTOR MIL-SPEC, MIL-J-641 (E)

SPECIFICATIONS

MECHANICAL

Life: Commercial Jacks: 10,000 insertion/withdrawal cycles, minimum. Military Jacks: 20,000 insertions/withdrawals, minimum.
Mechanical Shock: Military Jacks: Per MIL-STD 202, method 213, Test Condition H (75g).
Vibration: Military Jacks: Per MIL-STD-202, method 213, (10-55 Hz).
Insertion/Withdrawal Forces: (see charts below)

COMMERCIAL JACKS

Plug Diameter (inches)	.210	.250
Insertion (maximum)	7 lb.	7 lb.
Withdrawal (minimum)	1 lb.	1 lb.

MILITARY JACKS

Part Number	C11	C12A	C12B
Insertion (maximum)	6 lb.	7 lb.	6 lb.
Withdrawal (minimum)	2 lb.	3 lb.	1.5 lb.
Withdrawal (maximum)	7 lb.	7 lb.	5 lb.

ELECTRICAL

Contact Resistance: Commercial Jacks - .030 ohms maximum (initial), .050 ohms maximum (after humidity, durability exposure). Per MIL-STD-202E. Military Jacks - .010 ohms maximum (initial), .020 ohms maximum (after life), .10 ohms maximum (after salt spray).
Insulation Resistance: Commercial Jacks - 10,000 MΩ minimum (initial), 1,000 MΩ minimum (after humidity). Military Jacks - 10,000 MΩ minimum (initial), 1,000 MΩ minimum (after humidity, durability exposure).
Dielectric Withstanding Voltage: 500 V, 60 Hz (rms) AC.
Contact Rating: 1 A, 25 V DC.

ENVIRONMENTAL

Thermal Range: Commercial Jacks; -55°C to +85°C (non-operating); -20°C to +65°C (operating). Military Jacks; -55°C to +85°C (non-operating); -40°C to+65°C (operating).
Thermal Shock: Commercial Jacks - Per MIL-STD 202, method 107. Military Jacks - Per MIL-STD 202, method 107.
Humidity: Commercial Jacks - Per MIL-STD 202, method 106. Military Jacks - 0% to 95% operating and non-operating.
Salt Spray: Commercial Jacks - Per MIL-STD 202, method 101. Military Jacks - Per MIL-STD 202, method 101 (48 hours).
Moisture Resistance: Military Jacks - Per MIL-STD 202, method 106 (240 hours).

MATERIAL

Mounting Bushing: Nickel-plated copper alloy.
Insulation: Rigid plastic.
Springs: Special copper alloy. Integral contacts are standard in the isolated switching circuits; fine silver contacts in C12A switching circuit.

Sleeve Terminal: Copper alloy.
Hardware: Supplied with one Number **P10001** copper alloy nickel-plated hex nut, and one Number **51022** steel nickel-plated washer - except copper alloy nickel-plated washer Number S10451 supplied on C11, C12A and C12B.
*Commercial jacks feature integral contacts. Integral contacts should not be used where low contact resistance is a requirement.

Littel Jax® Jacks

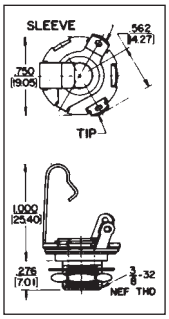

11, L-11, C-11, S-11
*.276" for No. FA-11

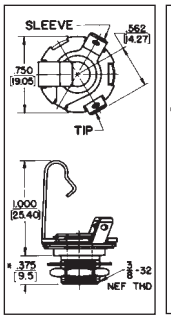

FA-11, FAL-11
S-12A, SC-12A

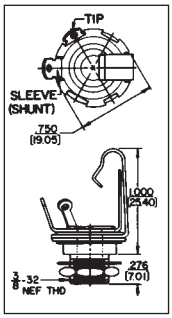

12 12-A, L-12A
S-12A, SC-12A

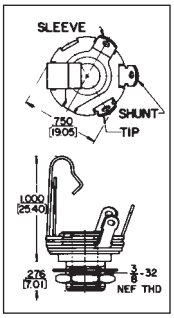

12A, L-12A

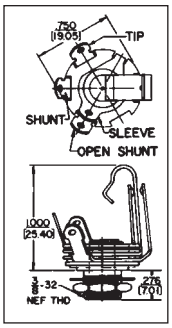

PC-12A

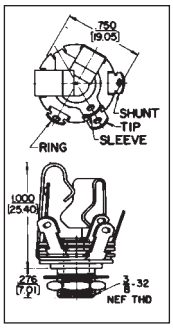

12B, C12B
S-12B, SC-12B

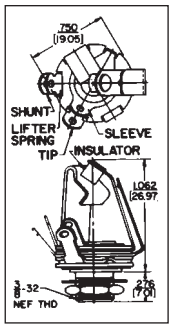

13

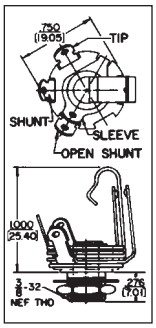

13A

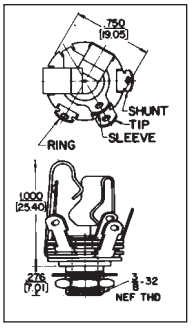

13B, S-13B

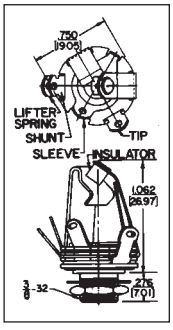

13E

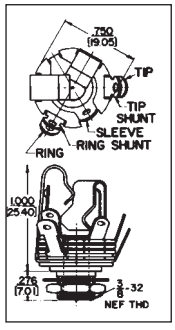

14B

DIMENSIONS ARE FOR REFERENCE ONLY Inch (mm)

* Please visit the product pages on our website for the most up-to-date product information

1/4" ENCLOSED TELEPHONE JACKS



Series M11*



Series MNS11*



Series MS11*



Series MN11*

Compactly constructed jacks permit direct cross-patching with Switchcraft, WEco and MIL-type telephone plugs and patch cords. Series M Hi-D Jax® offer a choice of solder lugs or PC terminals. Both insulated and metal bushings can be specified, as well as .21" inside diameter sleeves for narrow plug fingers. Maximum contact resistance is .1 ohm. Springs are made of a special gold-plated copper alloy. Welded cross bar gold alloy contacts are available on special order.

SERIES M-11* HI-D JAX®

Two- and 3-conductor type mate with .25" diameter finger plugs. Tip and ring springs are gold-plated. Shunts (if used) have welded crossbar palladium contacts. Ring springs (where used with shunts) have welded crossbar palladium contacts. Tip springs (when used) do not have a contact welded to the spring. Bushing has 3/8-32-NEF-2 thread; locknut and flat washer for mounting are supplied.

SERIES MN-11* HI-D JAX®

Same as Series M-11* except threaded bushing is molded thermoplastic for insulated mounting. Continuous sleeve contact assures positive sleeve connection without exposed metal on front of panel.

SERIES M113 AND M114 HI-D JAX®

The versatile 3-conductor M113 and M114 feature springs which accept a wide variety of 1/4" plug designs. Self-aligning PC terminals allow for easier insertion into a printed circuit board. Also feature a metric thread mounting.

SPECIFICATIONS

MATERIALS

Mounting Bushing: Series M11*, MS11* - Nickel-plated copper alloy. Series MN11*, MNS11* - Molded thermoplastic.
Housing: Molded thermoplastic, UL 94V-0.
Springs: Copper alloy.
Contacts (mil-type): Tip and Ring Springs are gold-plated. Shuntsprings (where used) are welded crossbar palladium. Welded crossbar gold alloy contacts are available on special order.
Contacts (commercial): Tin-plated integral contacts.
Sleeve Terminal: Steel, tin-plated.
Hardware: Supplied with one **P10001** copper alloy, nickel-plated locknut and one **S10221** steel, nickel-plated washer.

MECHANICAL

Life: 10,000 insertion/withdrawal cycles, minimum.
Insertion/Withdrawal Forces: Nominal plug retention on 2-conductor jack is .75 pounds with .5 pounds minimum. Nominal plug retention on 3-conductor jack is 2 pounds with 1.5 pounds minimum. With double tips, the nominal is 1.5 pounds and 1 pound minimum.
Maximum Recommended Mounting Torque: 6" -lb. for thermoplastic bushing.
Mounting Torque (for Spring Lock PC Terminal): 8" -pound for thermoplastic bushings.

ELECTRICAL

Contact Resistance: .020 ohms maximum (initial), .050 ohms maximum (after humidity, durability exposure). Per MIL-STD-202E.
Insulation Resistance: 10,000 MΩ minimum (initial), 1,000 MΩ minimum (after humidity).
Dielectric Withstanding Voltage: 500 V, 60 Hz (rms) AC.
Contact Rating: 0.25, 48 VDC make and break, 3A carry only.

ENVIRONMENTAL

Thermal Range: -55°C to +85°C (non-operating); -20°C to +65°C (operating).
Thermal Shock: Per MIL-STD 202, method 107.
Humidity: Per MIL-STD 202, method 106.
Salt Spray: Per MIL-STD 202, method 101.

DIMENSIONS ARE FOR REFERENCE ONLY Inch (mm)

® Registered trademark of Switchcraft, Inc.
Note: Contact your Switchcraft Representative for price and delivery

* Please visit the product pages on our website for the most up-to-date product information

1/4" ENCLOSED TELEPHONE JACKS (CONTINUED)

SERIES MS11* HI-D JAX®

3-conductor with .21" inside diameter sleeve. Mates with plugs having .206" diameter finger. Protects against accidental insertion of .25" diameter finger plugs. Gold-plated tip and ring springs. Welded crossbar palladium contacts on shunt springs standard. Bushing has 3/8-32-NEF-2 thread; locknut and flat washer for mounting are supplied.

◊SERIES MNS11* HI-D JAX®

Same as Series MS11* except bushing is molded thermoplastic.

◊TWIN M11* HI-D JAX®

Two Series M11* Hi-D Jax strapped on .625" centers. Mates with Switchcraft® Twin Plugs. 411, 412 and 413. MIL-type Littel-Plug® phone plugs, 420, 430 and 440 (2-conductor) and 482 and 483 (3-conductor) are also recommended for mating with this series.

ORDERING INFORMATION

Order by part number from table.

2-CONDUCTOR				
Part Number Solder Lugs	Part Number PC Terms	Description	Schematic**	Typical Mating Plug*
M111	–	.25" I.D. sleeve, metal bushing.	I	420
MN111	–	.25" I.D. sleeve, molded thermoplastic bushing.		
◊M112A	◊M112APC	.25" I.D. sleeve, metal bushing.	III	
MN112A	◊MN112APC	.25" I.D. sleeve, molded thermoplastic bushing.		
M113E	–	.25" I.D. sleeve, metal bushing.	IX	
MN113E	–	.25" I.D. sleeve, molded thermoplastic bushing.		

◊ Special Order only; contact Switchcraft.
* Other mating plugs are contained in this plug section.
** See pages 79 and 80.

3-CONDUCTOR				
Part Number Solder Lugs	Part Number PC Terms	Description	Schematic[1]	Typical Mating Plug[2]
M112B	· M112BPC	.25" inch I.D. sleeve, metal bushing.	IV	482
ML112B	–	.25" inch I.D. sleeve, .375 inch long metal bushing.		
MN112B	· MN112BPC	.25 inch I.D. sleeve, molded thermoplastic bushing.		
MNL112B	–	.25 inch I.D. sleeve, .375 inch long metal bushing.		
M113B	–	.25 inch I.D. sleeve, metal bushing.	VII	482
MN113B	MN113BPC	.25 inch I.D. sleeve, molded thermoplastic bushing.		
	M113BPC1M	.25 inch I.D. sleeve, molded thermoplastic bushing, metric hardware		482

3-CONDUCTOR				
Part Number Solder Lugs	Part Number PC Terms	Description	Schematic[1]	Typical Mating Plug[2]
MNL113B	–	.25 inch I.D. sleeve, .375 inch long metal bushing.	VII	482
M114B	· M114BPC	.25 inch I.D. sleeve, metal bushing.		482
	M114BPC1M	.25 inch I.D. sleeve, metal bushing, metric hardware.	XII	
MN114B	· MN114BPC	.25 inch I.D. sleeve, molded thermoplastic bushing.		480, 484

◊ Special order only; contact Switchcraft for price and delivery.
1 See schematics, pages 79 and 80.
2 Number(s) specified are not necessarily the only mating plug(s). See Plugs Section.

DIMENSIONS ARE FOR REFERENCE ONLY Inch (mm)

* Please visit the product pages on our website for the most up-to-date product information

1/4" ENCLOSED PHONE JACKS (continued)

HI-D® JAX 2- AND 3-CONDUCTOR



SERIES 11*



PC TERMINAL VIEW



SERIES N11*

Hi-D Jax® 2- and 3-conductor enclosed phone jacks are ideal for panel/chassis and PC board mounting. Unitized molded housing protects springs, provides mechanical and electrical reliability, minimizes leakage and provides low capacity between springs. Mounts on .625" minimum centers in rows or arrays. .25" or .21" inside diameter bushing types, metal or thermoplastic bushings (for insulated mounting). Insulated Hi-D Jax® jacks are specifically designed for in-circuit (insulated) mounting from mounting surface and have fully protected enclosed internal sleeve feature. Solder lugs or PC terminals may be selected.

MOUNTING

Jacks mount in a single .375" diameter hole on .625" minimum centers. Series 11*, N11*, NS11* and S11* mount in panels up to .156" thick. Series L11* and NL11* (long bushing) mount in panels up to .25" thick. Jacks with PC terminals mount on PC boards up to .094" thick. Formed “shoulders” on each terminal provide stable stand-off mount. Threaded bushing permits mechanical connection to equipment panel. Mounting hardware is supplied. Also available is a grounding spur bushing, which allows for positive grounding of the bushing to the chassis. Contact factory for details.

SERIES 11* - 2- and 3-conductor types, threaded metal bushing .276" long. .25" inside diameter bushings.

SERIES L11* - Same as Series 11*, except bushing is .375" long for mounting in panels up to .25" thick.

SERIES N11* - Same as Series 11*, except bushing is molded thermoplastic for insulated mounting.

SERIES NL11* - Same as Series N11*, except bushing is .375" long for insulated mounting in panels up to .25" thick.

SERIES S11* - Same as Series 11*, except bushing has .21" inside diameter. Smaller diameter protects against accidental insertion of plugs with .25" diameter fingers.

◊**SERIES NS11* -** (SPECIAL ORDER ONLY) - Same as Series N11*, except bushing is .21" inside diameter.

113BPC1M AND 114BPC1M - Versatile, 3-conductor 113BPC1M and 114BPC1M feature springs which accept a wide variety of 1/4" plug designs. Self-aligning PC terminals allow for easier insertion into a printed circuit board. Also feature a metric thread mounting.

TWO CONDUCTOR PART NUMBERS

Solder Lug Part Number	PC Terminals Part Number	Description	Jack Schematic[1]	Typical Mating Plug[2]
111	111PC	Open circuit	I	250
N111	N111PC	Insulated bushing	I	250
NL111	-	.375 " long insulated bushing	I	250
112A	112APC	Single closed circuit	III	250
L112A	◊L112APC	.375" long bushing	III	250
N112A	N112APC	Insulated bushing	III	250
NL112A	-	.375" long insulated bushing	III	250
113	113PC	Isolated "make" circuit	V	250
N113	-	Insulated bushing	V	250
◊113D	◊113DPC	Transfer circuit (1-C)	VI [3]	250
113E	113EPC	Isolated "break" circuit	IX	250

THREE CONDUCTOR PART NUMBERS

112B	112BPC	Double open circuit	IV	267
L112B	-	.375" long bushing	IV	267
N112B	N112BPC	Insulated bushing	IV	267
NL112B	-	.375" long bushing	IV	267
-	S112BPC	.210" inside diameter bushing	IV	S-267
113B	113BPC	Single closed circuit	VII	267
-	113BPC1M	Single closed circuit	VII	-
L113B	-	.375" long bushing	VII	267
N113B	N113BPC	Insulated bushing	VII	267
NL113B	-	.375" long bushing	VII	267
113F	113FPC	Ring circuit closed	XXVIII	267
114B	114BPC	Double closed circuit	XII	267
	114BPC1M	Double closed circuit	XII	-
L114B	◊L114BPC	.375" long bushing	XII	267
N114B	N114BPC	Insulated bushing	XII	267
NL114B	NL114BPC	.375" long bushing	XII	267

1 Other circuits available; contact factory. Schematics pages 79 and 80.
2 See Plug Section for other options.
3 Two tip springs.
◊ Special order only. Contact Switchcraft.

SPECIFYING NOTE: Unless otherwise shown in “Description”, jacks have .276" long threaded bushings with .25" inside diameter.

SPECIFICATIONS

MATERIAL

Mounting Bushing: Series 11*, L11*, S11* - Nickel-plated copper alloy.
Series N11*, NL11*, NS11* - Molded thermoplastic over nickel-plated copper alloy sleeve.

DIMENSIONS ARE FOR REFERENCE ONLY Inch (mm)

® Registered trademark of Switchcraft, Inc.
Note: Contact your Switchcraft Representative for price and delivery

* Please visit the product pages on our website for the most up-to-date product information

1/4" ENCLOSED PHONE JACKS (continued)

HI-D JAX® 2- AND 3-CONDUCTOR

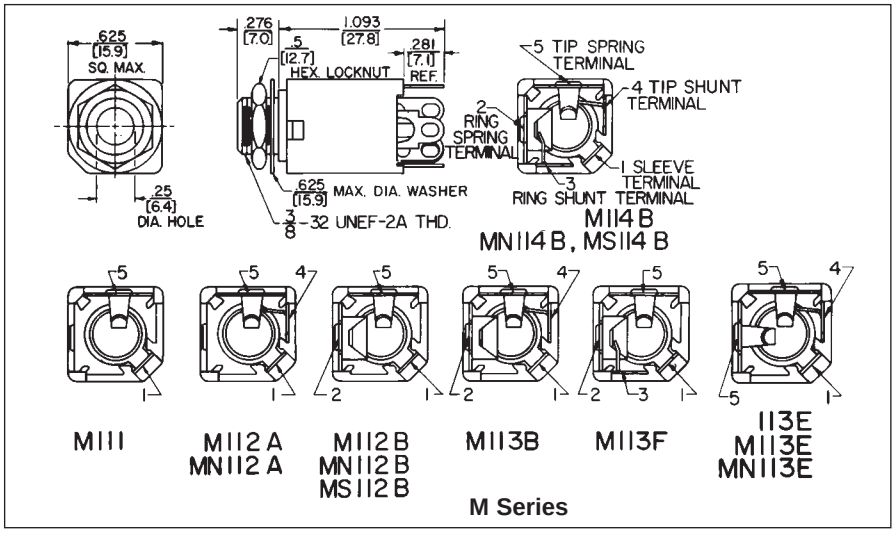

M Series

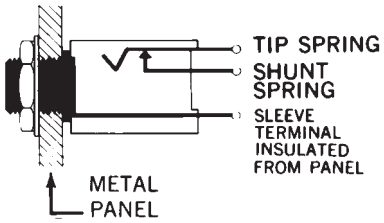

Hi-D Jax® with Insulated Bushing

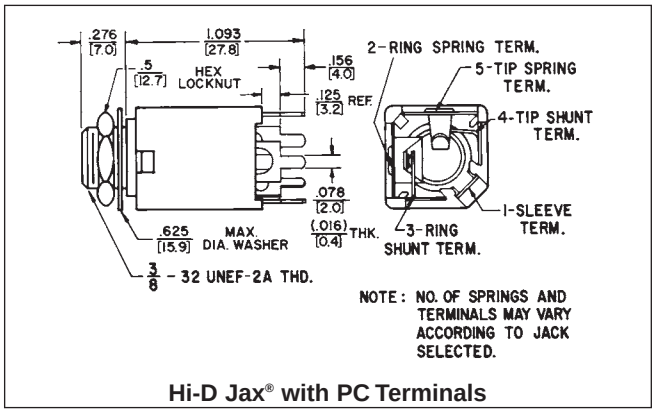

Hi-D Jax® with PC Terminals

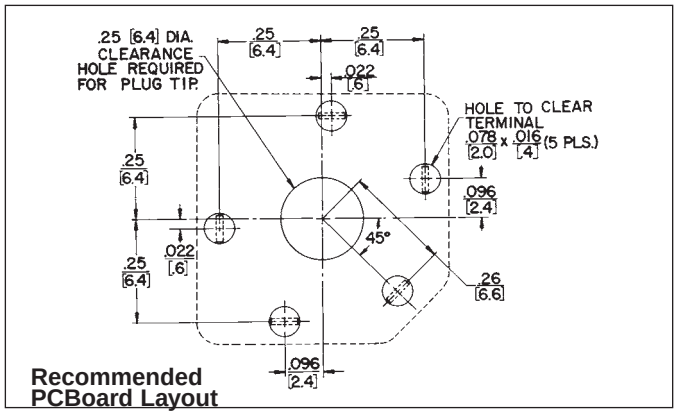

Recommended PCBoard Layout

Standard (Solder lugs)

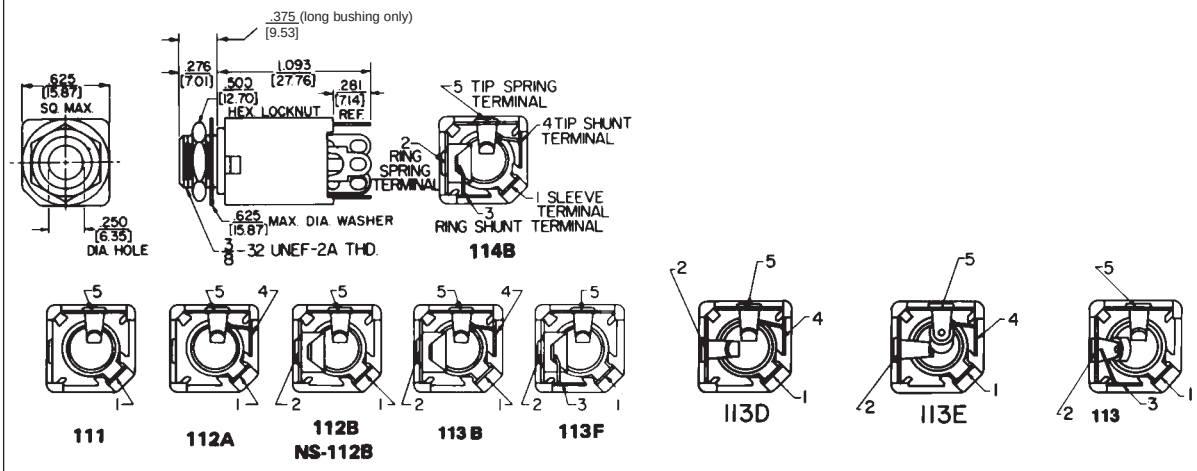

DIMENSIONS ARE FOR REFERENCE ONLY Inch (mm)

* Please visit the product pages on our website for the most up-to-date product information

SPRING LOCK PC TERMINALS FOR HI-D JAX®

HI-D JAX® SHOWING SPRING LOCK PC TERMINALS

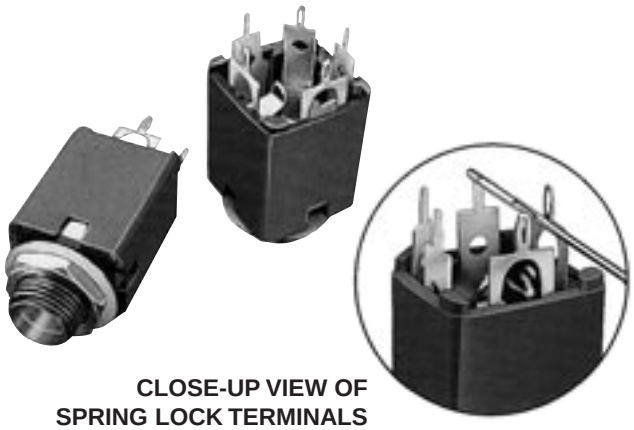

CLOSE-UP VIEW OF SPRING LOCK TERMINALS

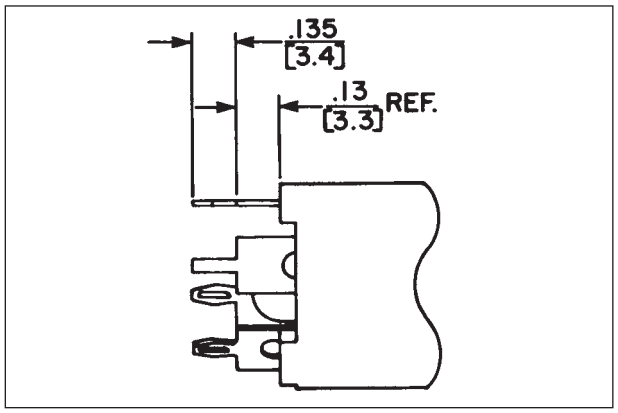

PARTIAL VIEW SHOWING SPRING LOCK TERMINALS

Tip, ring and sleeve terminals are spring lock type.

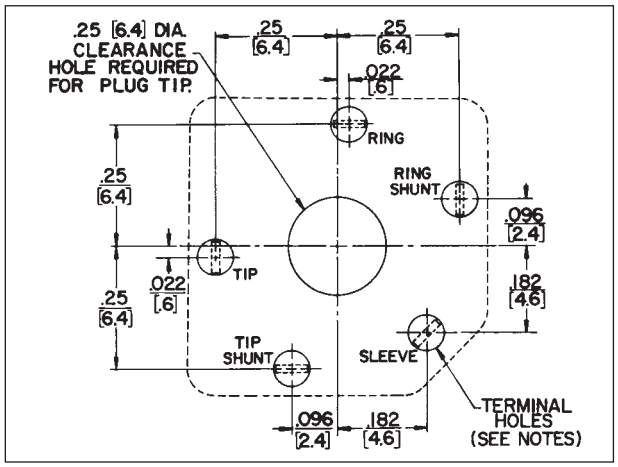

RECOMMENDED PC BOARD LAYOUT SPRING LOCK TERMINALS (COMPONENT SIDE)

NOTES:
1. SERIES 110PC—ALL HOLES TO CLEAR .078" X .016" TERMINAL.
2. SERIES 110PCS—TIP, RING & SLEEVE HOLES TO BE .055" DIA. RING SHUNT & TIP SHUNT HOLES TO CLEAR .078" X .016" TERMINAL.

Hi-D Jax® enclosed 1/4" phone jacks offer spring lock PC terminals which close during insertion into PC board. Upon completed insertion, the terminals reopen to securely hold the jack to the PC board during soldering. Solder "fills" the terminals which provides an additional security from loosening. The spring lock terminal is available on all Hi-D Jax® which currently offer PC terminals.
NOTE: Tip and ground terminals can be specified with spring lock terminals (also ring terminal on 3-conductor jacks).

MOUNTING

Jacks mount in a single .375" diameter hole on .625" minimum centers. Series 11*, N11* and S11* mount in panels up to .156 " thick. Series NL11* (long bushing) mount in panels up to .250 " thick. Jacks with PC terminals mount on PC boards up to .094 " thick. Spring lock PC terminals hold jack securely to PC board. Threaded bushing permits mechanical connection to equipment panel. Mounting hardware is supplied. See "RECOMMENDED PC BOARD LAYOUT" for further details.

SERIES 11* - 2- and 3-conductor types, threaded metal bushing .276" long. .250 inch inside diameter bushings.
SERIES N11* - Same as Series 11* except bushing is molded thermoplastic for insulated mounting.
SERIES NL-11* - Same as Series N11* except bushing is .375" long for insulated mounting in panels up to .250" thick.
SERIES S11* - Same as Series 11* except bushing has .210" inside diameter Smaller diameter protects against accidental insertion of plugs with .250" diameter fingers.

SPECIFICATIONS

MATERIAL

Mounting Bushing: Series 11*, S11*: Nickel-plated copper alloy. Series N11*, NL11*: Molded thermoplastic over plated copper alloy sleeve.

ORDERING INFORMATION

TWO CONDUCTOR PART NUMBERS			
Part Number	**Description**	**Jack Schematic**	**Typical Mating Plug[1]**
◊**111PCS**	Open circuit	I	250
◊**N111PCS**	Insulated bushing	I	250
◊**112APCS**	Single closed circuit	III	250
◊**N112APCS**	Insulated bushing	III	250
113PCS	Isolated "make" circuit	V	250
◊**113EPCS**	Isolated "break" circuit	IX	250
THREE CONDUCTOR PART NUMBERS			
◊**112BPCS**	Double open circuit	IV	267
◊**N112BPCS**	Insulated bushing	IV	267
◊**S112BPCS**	.210" I.D. bushing	IV	S267
◊**113BPCS**	Single closed circuit	VII	267
◊**N113BPCS**	Insulated bushing	VII	267
113FPCS	Ring closed circuit	XXVIII	267
◊**114BPCS**	Double closed circuit	XII	267
◊**N114BPCS**	Insulated bushing	XII	267
◊**NL114BPCS**	.375" long bushing	XII	267

1 See Jack Section for other mating plugs.
◊ Special order only. Contact Switchcraft.

DIMENSIONS ARE FOR REFERENCE ONLY Inch (mm)

® Registered trademark of Switchcraft, Inc.
Note: Contact your Switchcraft Representative for price and delivery

* Please visit the product pages on our website for the most up-to-date product information

1/4" RIGHT-ANGLE PHONE JACKS

SERIES SN37, SN49 AND SN70



SN37A14B with cover Number P2993



SN49B12B with cover Number P2994



SN49A12B



SN49C12B



SN70B12A



SN70C14B

These low-profile phone jacks have "snap-in" PC mounting, right-angle plug insertion and available with 2- and 3-conductor circuits and plastic or metal bushings. Ideal for telecommunications, data processing and other high quality audio connecting applications.

SERIES SN37A - Right-angle PC mount phone jack with molded plastic housing. Only .375" high, this jack features a plain (non-threaded) bushing and accepts commercial standard phone plugs with .25" diameter finger.

Jack circuit selection:
2-conductor • Single open circuit • Shunted tip
3-conductor • Double open circuit • Shunted tip and ring

Jack housing snaps into PC boards (.062" thick) and features molded tension fingers to provide stable mount. Location pin polarizes mounting for correct insertion every time. Clearance between housing facilitates board cleaning without disturbing internal springs. SN37 without tension fingers available on special order.

Molded housing protects internal parts and allows high density packaging. Supplied with "Snap-On" cover.

SERIES SN49A - Similar to Series SN37A, except .492" high and insulated/plain (non-threaded) bushing. "Snap-On" cover available on special order only.

SERIES SN49B - Similar to Series SN37A, except .492" high and insulated threaded bushing. Washer and hex nut for bushing mount supplied. "Snap-On" cover available on special order only.

SERIES SN49C - Similar to Series SN37A, except .492" high and threaded metal bushing. Washer and hex nut for bushing mount supplied. "Snap-On" cover available on special order only.

SERIES SN70B - This series features threaded/insulated bushing and .708" in height. Circuit selection and housing features are same as Series SN49B. "Snap-On" cover not available.

SERIES SN70C - Same as Series SN70B, except bushing is threaded metal type.

SPECIFICATIONS

MECHANICAL

Shock: Per MIL-STD-202, method 213.
Vibration: Per MIL-STD-202, method 201.
Insertion Force: 8 pounds maximum.
Withdrawal Force: 1.5 pounds minimum.
Life: 10,000 cycles minimum.

ELECTRICAL

Insulation Resistance: 2 x 106 MΩ at 500 V DC per MIL-STD-202, method 302 (initial).
Dielectric Withstanding Voltage: 500 V AC.

ENVIRONMENTAL

Thermal Range: -55°C (-67°F) to +85°C (+185°F) Non operating. -20°C to + 65°C Operating.
Thermal Shock: Per MIL-STD-202d, method 107.
Humidity: Per MIL-STD-202, method 106, less steps 7A and 7B.
Salt Spray: Per MIL-STD-202, method 101.

MATERIAL

Housing and Cover: Black thermoplastic, UL 94V-O.
Contact Springs: Copper alloy with tin-plated terminals.
Hardware: Nickel-plated copper alloy.
Metal Bushing: Nickel-plated copper alloy.

ORDERING

1. Order jacks from tables on page 103.
2. For all special order items, contact Switchcraft.

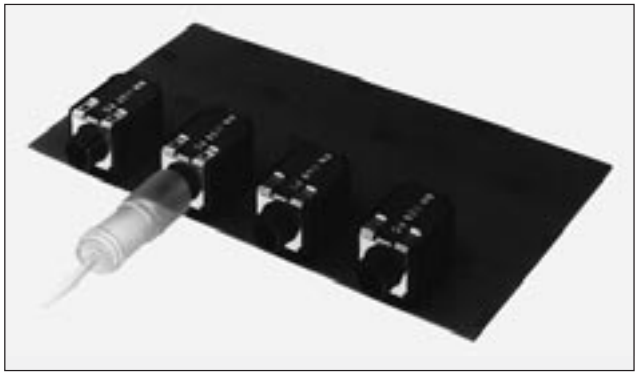

DIMENSIONS ARE FOR REFERENCE ONLY Inch (mm)

* Please visit the product pages on our website for the most up-to-date product information

1/4" RIGHT-ANGLE PHONE JACKS (continued)

SERIES - RA and RN



Series RN110







Series RA

SERIES RA - 2- and 3-conductor RA Jax® are designed with split terminals which provide two distinct advantages over contemporary jacks:

1. Positive retention of jack in PC board during wave soldering.
2. Split terminal permits additional solder flow paths up the terminal for better mechanical/electrical connection

Tip spring design facilitates positive retention of differing mating plug tip shapes (industry standard and others).

SERIES RN - Right-angle Hi-D Jax® permits space-saving mounting on PC boards. Available in 2- and 3-conductor types with or without shunt circuits, which can mate with .25" diameter COMMERCIAL or TELEPHONE/MIL plug fingers. Right-angle jack permits tip of mating plug to be inserted parallel with PC board. Can be mounted on PC boards or combined PC board and panel/chassis.

Mounted through .375" diameter holes (locknut and washer supplied) in panels and chassis up to .141" thick. Minimum mounting centers are .625". If insulated mount is desired, mounting with flat, non-conductive washer (not supplied) is recommended.

PC terminals mount on boards up to .125" thick, and hand dip or wave soldering, is recommended. Three separate standoffs fit through board to provide stable mounting.Threaded bushing permits optional fastening to panel or chassis.

SERIES RN110 - 2- and 3-conductor right-angle types mount in PC boards or panel/chassis. Bushing is .278" long.

SPECIFICATIONS

Housing: Thermoplastic.
Bushing: Integral with housing.
Springs: Copper alloy, silver-plated (also available with selectively gold-plated contact points and selectively tin-plated terminals).
Contacts: Integral, part of shunt springs.

NOTE: Specifications for Mechanical, Electrical and Environmental are the same for Hi-D® Jax. (page 98)

DIMENSIONS ARE FOR REFERENCE ONLY Inch (mm)

® Registered trademark of Switchcraft, Inc.
Note: Contact your Switchcraft Representative for price and delivery

* Please visit the product pages on our website for the most up-to-date product information

1/4" RIGHT-ANGLE PHONE JACKS (continued)

ORDERING INFORMATION

SERIES SN Part Numbers	Description	Jack[2] Schematic	Typical Mating Plug[3]
SN37A11[1]	2-cond., open circuit	I	250
SN37A12A[1]	2-cond., single closed circuit	III	
SN37A12B[1]	3-cond., double open circuit	IV	267
SN37A14B[1]	3-cond., double closed circuit	XII	
SN49A11[1]	2-cond., open circuit	I	250
SN49A12A[1]	2-cond., single closed circuit	III	
SN49A12B[1]	3-cond., double open circuit	IV	267
SN49A14B[1]	3-cond., double closed circuit	XII	
SN49B11[1]	2-cond., open circuit	I	250
SN49B12A[1]	2-cond., single closed circuit	III	
SN49B12B[1]	3-cond., double open circuit	IV	267
SN49B14B[1]	3-cond., double closed circuit	XII	
SN49C11	2-cond., open circuit	I	250
SN49C12A	2-cond., single closed circuit	III	
SN49C12B	3-cond., double open circuit	IV	267
SN49C14B	3-cond., double closed circuit	XII	
SN70B11	2-cond., open circuit	I	250
SN70B12A	2-cond., single closed circuit	III	
SN70B12B	3-cond., double open circuit	IV	267
SN70B14B	3-cond., double closed circuit	XII	
SN70C11	2-cond., open circuit	I	250
SN70C12A	2-cond., single closed circuit	III	
SN70C12B	3-cond., double open circuit	IV	267
SN70C14B	3-cond., double closed circuit	XII	

1 Series SN37A supplied with Part Number P2993 cover. Series SN49A and SN49B can be supplied with Part Number P2994 cover on special order. Contact Switchcraft.

ORDERING INFORMATION

SERIES RA Part Numbers	Description	Jack[2] Schematic	Typical Mating Plug[3]
RA49B11	2-cond., open circuit	I	250
RA49B12A	2-cond., single closed circuit	III	
RA49B12B	3-cond., double open circuit	IV	267
RA49B14B	3-cond., double closed circuit	XII	
RA49C11	2-cond., open circuit	I	250
RA49C12A	2-cond., single closed circuit	III	
RA49C12B	3-cond., double open circuit	IV	267
RA49C14B	3-cond., double closed circuit	XII	
RA70B11	2-cond., open circuit	I	250
RA70B12A	2-cond., single closed circuit	III	
RA70B12B	3-cond., double open circuit	IV	267
RA70B14B	3-cond., double closed circuit	XII	
RA70C11	2-cond., open circuit	I	250
RA70C12A	2-cond., single closed circuit	III	
RA70C12B	3-cond., double open circuit	IV	267
RA70C14B	3-cond., double closed circuit	XII	
SERIES RN Part Numbers			
RN111PC	2-cond., single open circuit	I	250
RN112APC	2-cond., single closed circuit	III	250
RN112BPC	3-cond., double open circuit	IV	267
RN113BPC	3-cond., tip closed, ring open	VII	267
◊**RN113FPC**	3-cond., tip open, ring closed	XXVIII	267
RN114BPC	3-cond., double closed circuit	XII	267

2 See pages 79 and 80.
3 Other mating plugs are available.
◊ Special order only. Contact Switchcraft.

DIMENSIONS ARE FOR REFERENCE ONLY Inch (mm)

* Please visit the product pages on our website for the most up-to-date product information

1/4" RIGHT-ANGLE PHONE JACKS (continued)

SERIES SN

JACK SCHEMATICS



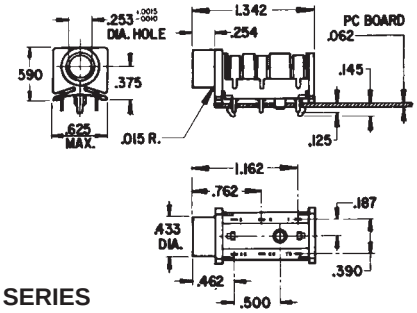

SERIES SN37A

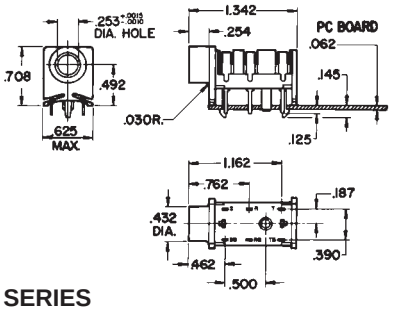

SERIES SN49A

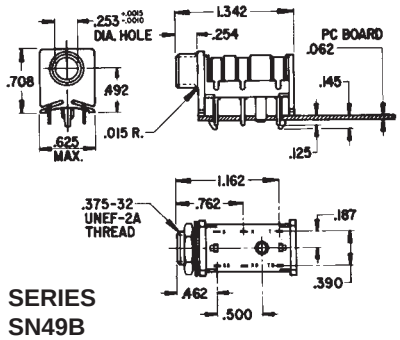

SERIES SN49B

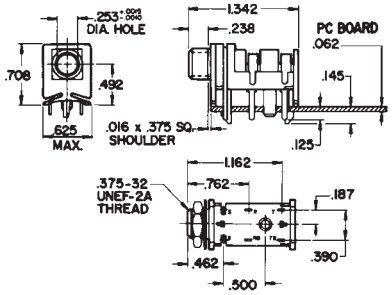

SERIES SN49C

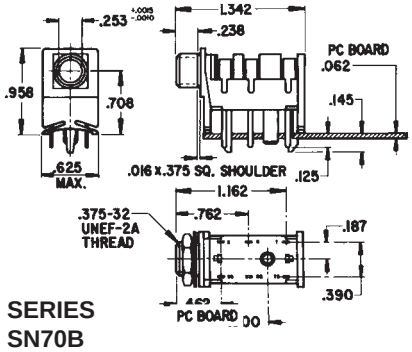

SERIES SN70B

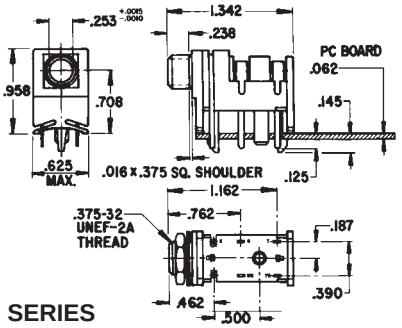

SERIES SN70C

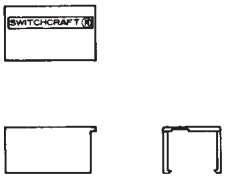

COVERS, PART NO. P-293 & P-2994
(No. P-2994, special order only)

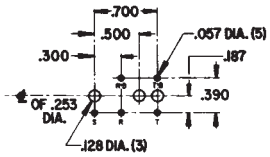

RECOMMENDED PC BOARD LAYOUT
SERIES SN37A, SN49A & SN49B
(Component Side)

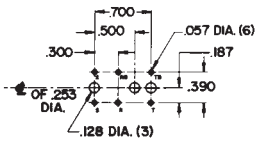

RECOMMENDED PC BOARD LAYOUT
SERIES SN49C
(Component Side)

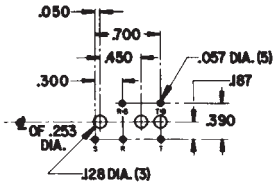

RECOMMENDED PC BOARD LAYOUT
SERIES SN70B
(Component Side)

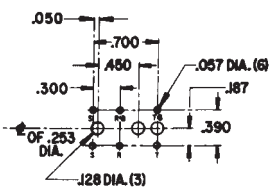

RECOMMENDED PC BOARD LAYOUT
SERIES SN70C
(Component Side)

DIMENSIONS ARE FOR REFERENCE ONLY Inch (mm)

® Registered trademark of Switchcraft, Inc.
Note: Contact your Switchcraft Representative for price and delivery

* Please visit the product pages on our website for the most up-to-date product information

1/4" RIGHT-ANGLE PHONE JACKS (continued)

SERIES RA and RN

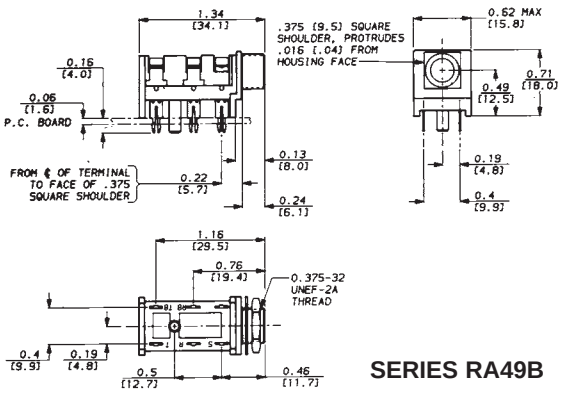

SERIES RA49B

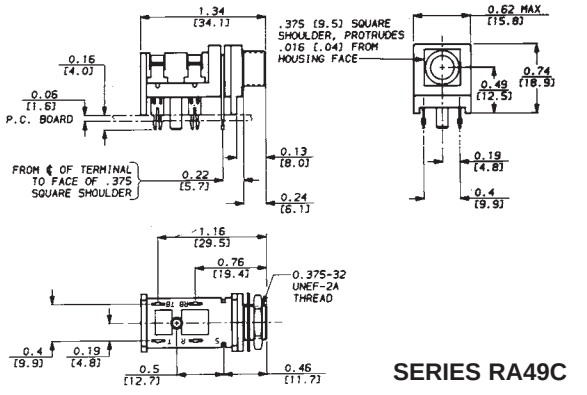

SERIES RA49C

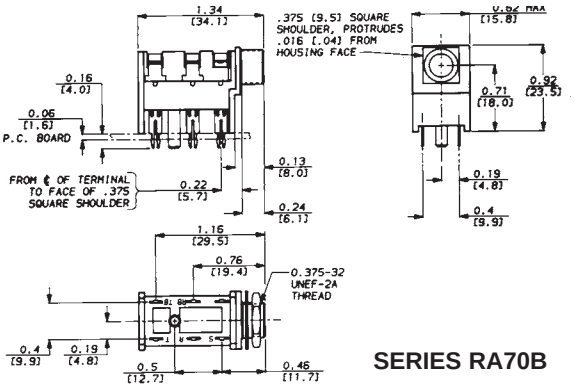

SERIES RA70B

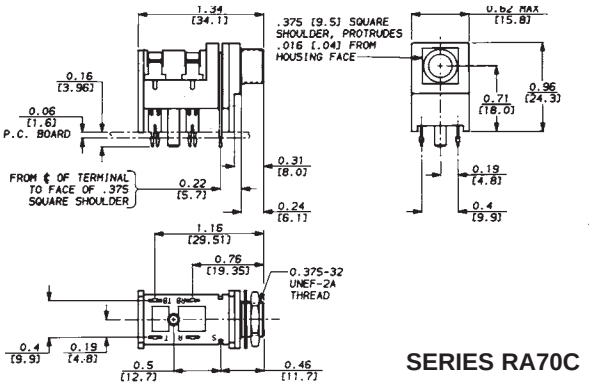

SERIES RA70C

RN SERIES DIMENSIONS

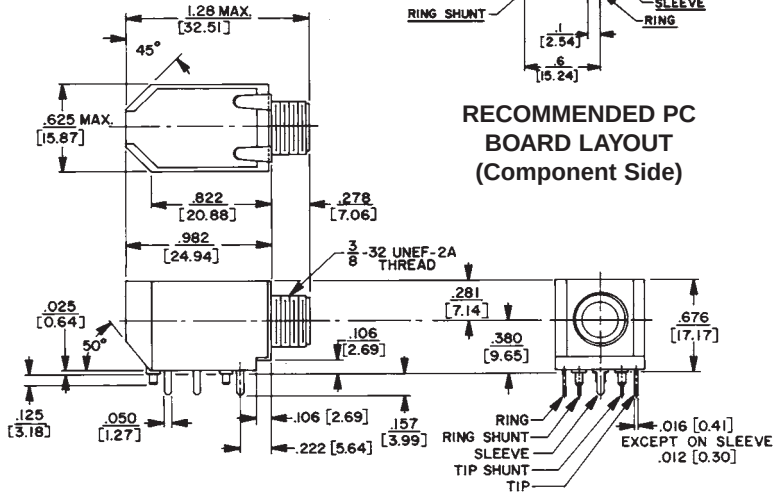

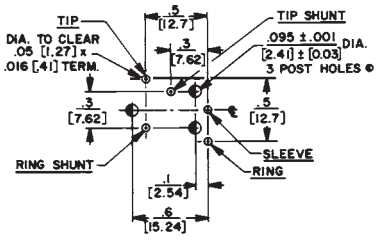

RECOMMENDED PC BOARD LAYOUT (Component Side)

RECOMMENDED PC BOARD LAYOUT (Component Side)

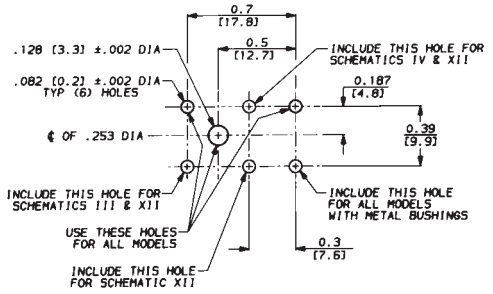

DIMENSIONS ARE FOR REFERENCE ONLY Inch (mm)

* Please visit the product pages on our website for the most up-to-date product information

JACK COVERS

Reliable, spring-loaded covers effectively seal front panel bushing openings from dust and dirt when mating plugs are not connected to jack. Series 500 is mounted with conventional threaded bushing jacks. Special locknut (comes with Series 500 jack covers) seals tightly against rubber washer when cover is closed. Series 600 is used with certain type tip jacks. Due to variable jack dimensions, two .031" washers are supplied.

SPECIFICATIONS

MATERIAL

Base and Cover: Steel per QQ-S-698; finish per MIL-F-14072 (Sig. C), enamel, semi-gloss.
Axle: Copper alloy per QQ-W-321, Type 321, composition B. Plated per QQ-P-416, Type II, Class 3.
Spring: Stainless steel per QQ-W-432, Type 302.
Hex Nut: Copper alloy per QQ-B-626, composition 22. Same plating as axle.
Gasket: Synthetic rubber per MIL-R-6855, Type II, 35-40 Durometer.
Washer (600 only): Steel per QQ-S-698; plated per QQ-P-416, Type II, Class 3.
Additional Specifications for Numbers 512 and 612: Same as above, except rivet, base, cover and hex nut and washer (Number 612 only) are nickel-plated per QG-N-290.

515



520



Color	Part No.	Part No.	Color	Part No.	Part No.
Olive Drab	510	◊610	Black	515	615
Bright Nickel	512	612	Navy Gray	520	◊620

◊ Special order only. Contact Switchcraft.

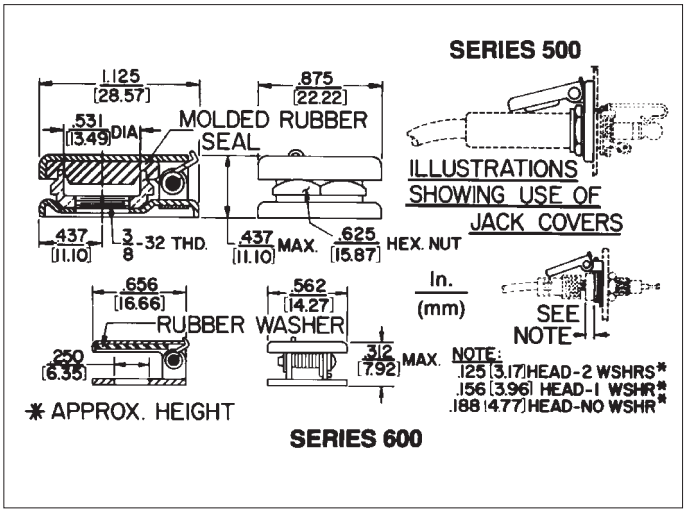

DIMENSIONS ARE FOR REFERENCE ONLY Inch (mm)

® Registered trademark of Switchcraft, Inc.
Note: Contact your Switchcraft Representative for price and delivery

* Please visit the product pages on our website for the most up-to-date product information

1/4" PHONE JACKS (continued)

LOCKING PHONE JACKS



SERIES E

Series E jacks provide stable, secure connections in panels where shock/vibration or accidental disconnect may occur. Plug locks-in automatically upon insertion; press "PUSH" tab to unlock and remove plug. Series E jacks have the same front panel appearance as Series E Q-G® audio connectors.

SPECIFICATIONS

MECHANICAL

Life: 10,000 cycles minimum.

ELECTRICAL

Insulation Resistance: 2 x 106 MΩ at 500 V DC per MIL-STD-202, method 302 (initial).
Dielectric Withstanding Voltage: 1,000 V AC (rms).

ENVIRONMENTAL

Thermal Range: -55°C to +85°C (non-operating); -20°C to +65°C (operating).
Thermal Shock: Per MIL-STD-202, method 107.
Humidity: Per MIL-STD-202, method 106.
Salt Spray: Per MIL-STD-202, method 101.

MATERIAL

Shell: Die-cast zinc, with satin nickel-plating. Black chrome over nickel-plating on special order.
Insert and Latch: Thermoplastic, UL 94V-O.
Latch Release: Nickel-plated die-cast zinc.
Contact Springs: Tin-plated copper alloy.

Part Number	Description	Jack Schematic[1]	Typical Mating Plug[2]
E111L	2-cond., open circuit	I	250
E112BL	3-cond., double open circuit	IV	267

1. See Jack Schematics, pages 79 and 80
2. See Plugs Section

THICK PANEL PHONE JACKS



151

Jacks are standard 2- and 3-conductor phone jacks with extra long threaded bushing for mounting in panels/chassis up to 1.25" thick. Metal bushing virtually eliminates hum pick-up, and is ideal for electric guitar and speaker connections. Jacks mate with standard commercial phone plugs. See plug section for mating plugs. Jacks mount in a single .469" diameter hole. Rugged cable clamp protects connections from twisting and pulling stresses.

SPECIFICATIONS

MATERIAL

Mounting Bushing: Nickel-plated copper alloy with knurled flange.
Insulating Spacer: Rigid plastic.
Insulator/Spring Mount: Thermoplastic.
Springs: Copper alloy.
Terminals: Tip: Copper alloy. Ring: (Number **152B** only) copper alloy.
Sleeve: Steel, tin-plated.
Hardware: Supplied with one, Number **P10531** nickel-plated copper alloy hex nut, and one, Number **P14761** nickel-plated copper alloy flat washer.

Part Number	Description	Jack Schematic	Typical Mating Plug
151	2-conductor, open circuit, nickel finish	I	280
152	2-conductor, open circuit, brass finish	I	280
152B	3-conductor, double open circuit, nickel finish	IV	297
153	2-conductor, open circuit, gold-plated springs, electro-polish brass finish, 9/16-12 UNC wood threads	I	280
154	3-conductor, double open circuit, gold finish, no cable clamp	IV	297
155	3-conductor, double open circuit, black satin finish, no cable clamp	IV	

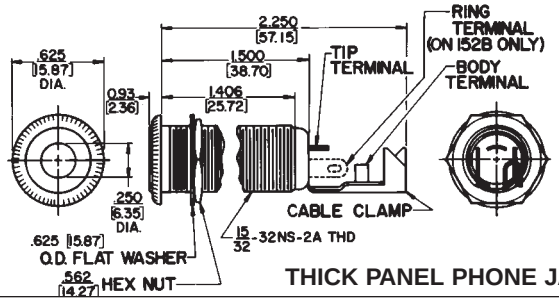

THICK PANEL PHONE JACKS

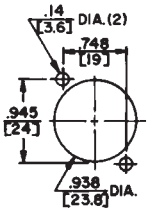

RECOMMENDED PANEL CUTOUT

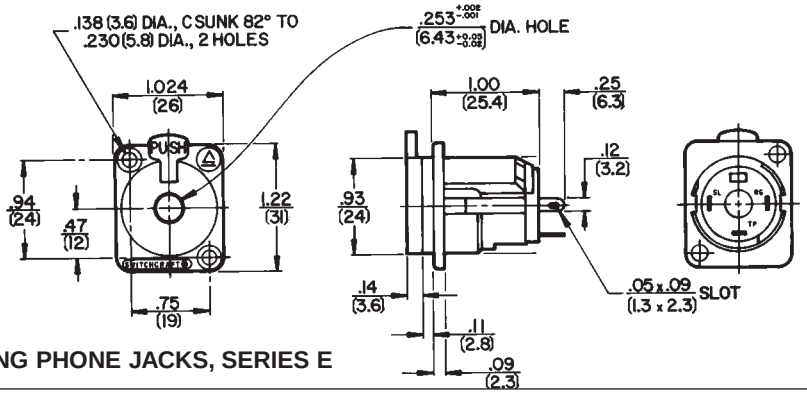

LOCKING PHONE JACKS, SERIES E

DIMENSIONS ARE FOR REFERENCE ONLY Inch (mm)

* Please visit the product pages on our website for the most up-to-date product information

1/4" EXTENSION JACKS (IN-LINE)



80 120 121, 131

Extension Jax® jacks are connected to the end of a cable. 2- and 3-conductor jacks mate with standard commercial phone plugs, and have a sturdy cable clamp strain relief, knurled shielded or molded black plastic handles, and a screw type solder terminal. All internal parts are interlocked. Note: See locking phone plugs section.

SPECIFICATIONS

MATERIAL

Body, Sleeve and Shielded Handle: Nickel-plated copper alloy.
Plastic Handles: Molded black thermoplastic.
Springs: Special copper alloy.
Bushing and Flange: Plated copper alloy.
Insulation: Thermoplastic.
Clamp Terminals: Tin-plated copper alloy.

TWO-CONDUCTOR PART NUMBERS

Part Number	Description	Mating Plug[1]
80	Black handle; screw terminals	250
88	Black handle; solder lugs	250
120	Shielded handle; screw terminals	250
121	Shielded handle; solder lugs; cable clamp	250
128	Shielded handle; solder lugs	250

THREE-CONDUCTOR PART NUMBERS

Part Number	Description	Mating Plug[1]
131	Shielded handle; solder lugs	267
830	Black handle; screw terminals	267
S830	Similar to No. 830 except, .21" I.D. sleeve	480
838	Black handle; solder lugs	267
1230	Shielded handle; screw terminals	267
1238	Shielded handle; solder lugs	267

1. Other mating plugs are available.

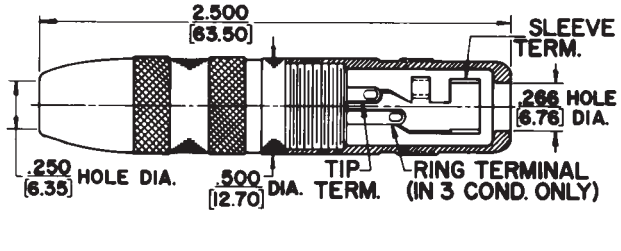

121, 131

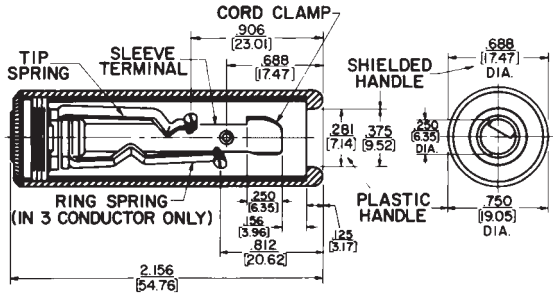

Z15J

1/4" SPEAKER JACKS

High power 2-conductor speaker jack carries 15A (continuous) audio speaker current levels. Jack Number **Z15J** has positive detent for plug retention. Terminations are solder lug; wires accepted are up to 10 AWG. Red housing indicates high current rating. Recommended mating plugs: 70, 184, 187 series.



Z15J

SPECIFICATIONS

Housing: Glass reinforced thermoplastic, UL 94V-O.
Tip Spring and Ground Terminals: Copper alloy.
Bushing and Hardware: Nickel-plated copper alloy (hardware supplied).
Heat Rise: 30°C with 15 A continuous carry.
Life: 10,000 (minimum) with proper plug.

Part Number	Description
Z15J	High power speaker jack

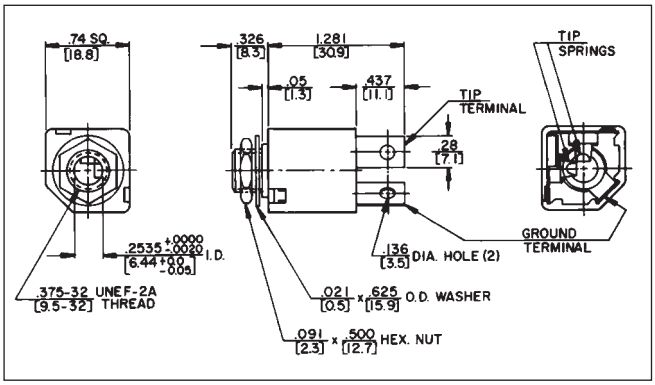

DIMENSIONS ARE FOR REFERENCE ONLY Inch (mm)

® Registered trademark of Switchcraft, Inc.
Note: Contact your Switchcraft Representative for price and delivery

* Please visit the product pages on our website for the most up-to-date product information

1/4" SHIELDED PHONE JACKS



CN12A

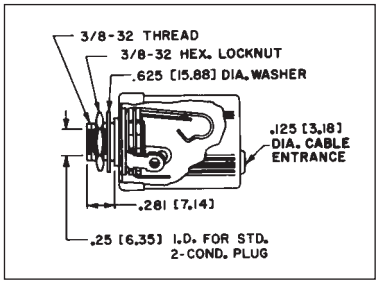

Shield is assembled as part of the jack; cover "snaps" into place. Shield is designed for Hi Z circuits. Mounting is through a 3/8" diameter hole in chassis/panel up to .156" thick with hex nut and flat washer (supplied). On special order, jacks with .21 inch inside diameter bushing are available.

SPECIFICATIONS

MATERIAL

Cover and Shield: Copper alloy, nickel-plated.
Cable Entry Insulation: Thermoplastic.

TWO CONDUCTOR PART NUMBERS

Part Number	Description	Jack Schematic[1]
CN11	Uses Number 11 Littel-Jax® jacks	I
◊**CN12A**	Uses Number 12A Littel-Jax® jacks	III

◊ Special order only. Contact Switchcraft.

THREE CONDUCTOR PART NUMBERS

CN12B	Uses Number 12B Littel-Jax® jacks	IV
◊**CN13B**	Uses Number 13B Littel-Jax® jacks	VII

1 See jack schematics on pages 79 and 80.
2 See Plug Section for mating information.
◊ Special order only. Contact Switchcraft.

SF-JAX® SHORT FRAME JACKS

Part No.	Cond.	Schematic Number	Typical Mating Plug	MIL Type	Contacts	Rating	Mounting In. (mm)
24B	3	XII	267	-----	Fine Silver	3A 125V AC	.375 (9.52) hole, mounts in panels up to .156 (3.96) thick
25	2	XIII	250	-----			
◊**53B**	3	VII	267	-----			
◊**54A**	2	XI	250	-----			
◊**54B**	3	XII	267	-----			
◊**55**	2	XIII	250	-----			
◊**C-55B**	3	XV	482	JJ-095, M641/14-1			

Long spring design reliability with minimum behind-panel depth. Series 50 same as Series 20, except solder lug location requires more depth, but less panel space. Number C55B has MIL type insulation and finish.



SERIES 20

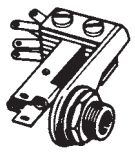

SERIES 50

.141" MINIATURE PHONE JACKS



125

MINIATURE EXTENSION JACK, PHONE JACK NUMBER 125 (EIA STANDARD)

Cable-mounted Tini-Extension Jax® 2-conductor single open circuit jack has built in cable clamp/sleeve terminal. Mates with Tini-Plug® phone plugs and other plugs with .141" diameter fingers and compatible tip shape. Shielded housing/handle is knurled for positive fingertip grip; solder lug terminals.
Body and handle: Nickel-plated copper alloy.
Insulation: Rigid plastic.
Springs: Plated copper alloy.

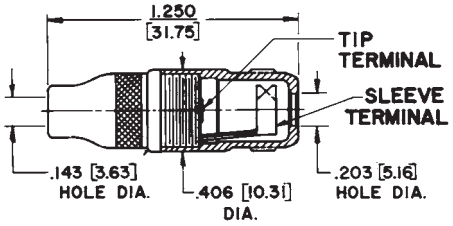

TINI-EXTENSION JAX JACK

Part Number	Description	Jack Schematic	Typical Mating Plug
125	Extension Jack	I	750

DIMENSIONS ARE FOR REFERENCE ONLY Inch (mm)

* Please visit the product pages on our website for the most up-to-date product information

.141" MINIATURE PHONE JACKS



41



42A



142A



PC142A

TINI-JAX® MINIATURE PHONE JACKS, NUMBERS 41, 42A, 43A

Tini-Jax 2-conductor phone jacks, (for limited space connecting, mate with miniature phone plugs having .141 " diameter fingers and compatible tip shape) are 1/3 the size of Littel-Jax® and weigh less than 1/8 ounce. Notched insulators interlock internal parts. Unique tip spring shape mates with Switchcraft Tini-Plug® phone plugs. Mounting hole: .250" diameter in panels up to .125" thick (mounting hardware supplied). For insulated mount, order two washers separately, Number **S1564** (swedged fiber washer .312" diameter mounting hole) and number **S2207** (flat phenolic washer).

SPECIFICATIONS
MECHANICAL

Life: 5,000 insertion/withdrawal cycles, minimum.

ELECTRICAL

Contact Resistance: .075 ohms maximum.
Insulation Resistance: 5,000 MΩ minimum.
Dielectric Withstanding Voltage: 250 V AC maximum.
Contact Rating: .25A, 48 V DC.

MATERIAL

Mounting Bushing: Nickel-plated copper alloy.
Insulating Spacers: Rigid plastic.
Springs: Special copper alloy.
Sleeve Terminal: Tin-plated copper alloy.
Hardware: Supplied with one, Number **P11501** nickel-plated copper alloy locknut, and one, Number **S17901** nickel-plated steel flat washer.

Part Number	Description	Jack Schematic[1]	Typical Mating Plug[2]
41	Open circuit	I	750
42A	Shunted (closed circuit)	III	750
43A	Special transfer circuit	Note 3	750
142A	Shunted (closed circuit)	III	750
PC142A	Shunted (closed circuit)	III	750

1. See jack schematics, pages 79 and 80.
2. See Plugs Section for mating information.
3. When inserted, plug tip contacts "make" tip spring. Further insertion allows tip to short "make" tip spring and tip spring together. Full insertion opens tip shunt circuit.

TINI-D-JAX® MINIATURE ENCLOSED PHONE JACKS, NUMBERS 142A, PC142A

Tini-D Jax uses Hi-D Jax® construction and mounts on .375" centers. Weight: 3.6 grams. Number 142A mounts through .25" diameter hole in chassis/panel up to .125" thick. Four standoff dimples can be molded into housing to reduce effective length of bushing to .187" (special order). Number **PC142A** has special spring terminals for "snap-in" mounting to PC boards up to .125" thick - ready for hand, wave or dip-soldering.

SPECIFICATIONS
MECHANICAL

Life: 5,000 insertion/withdrawal cycles, minimum.
Insertion/Withdrawal: 15 ounce minimum, 40 ounce maximum, insertion. 12 ounce minimum, 25 ounce maximum, withdrawal.

ELECTRICAL

Contact Resistance: .10 ohms maximum.
Dielectric Withstanding Voltage: 250 V AC maximum.
Shunt Tension: 100 grams minimum.

MATERIAL

Housing: Molded plastic.
Mounting Bushing: Plated copper alloy.
Tip Spring: Plated copper alloy, bifurcated.
Shunt Springs: Plated copper alloy.
Sleeve Bracket: Plated steel.
Insulator: Rigid plastic.
Hardware: Number **142A** supplied with one, Number **P1975** nickel-plated copper alloy locknut, and one, Number **S3997** nickel-plated steel flat washer.

DIMENSIONS ARE FOR REFERENCE ONLY Inch (mm)

® Registered trademark of Switchcraft, Inc.
Note: Contact your Switchcraft Representative for price and delivery

* Please visit the product pages on our website for the most up-to-date product information

.141" MINIATURE PHONE JACKS (continued)

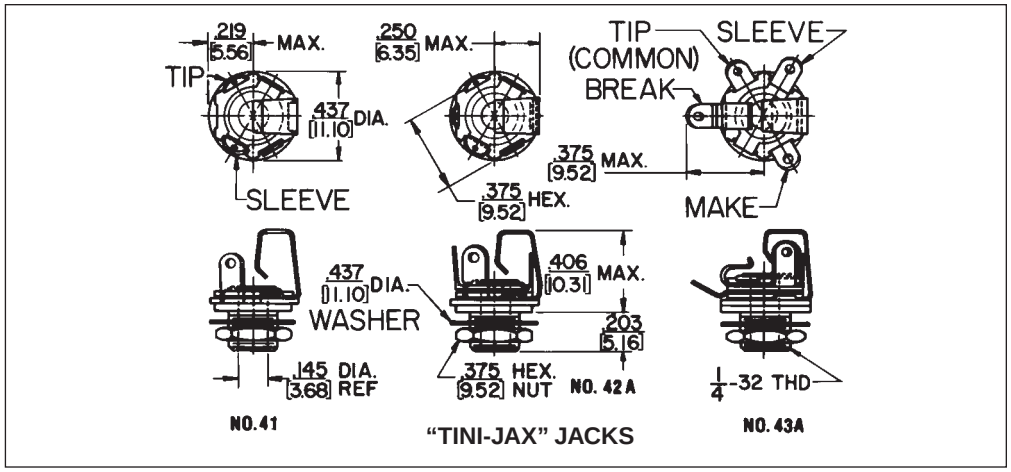

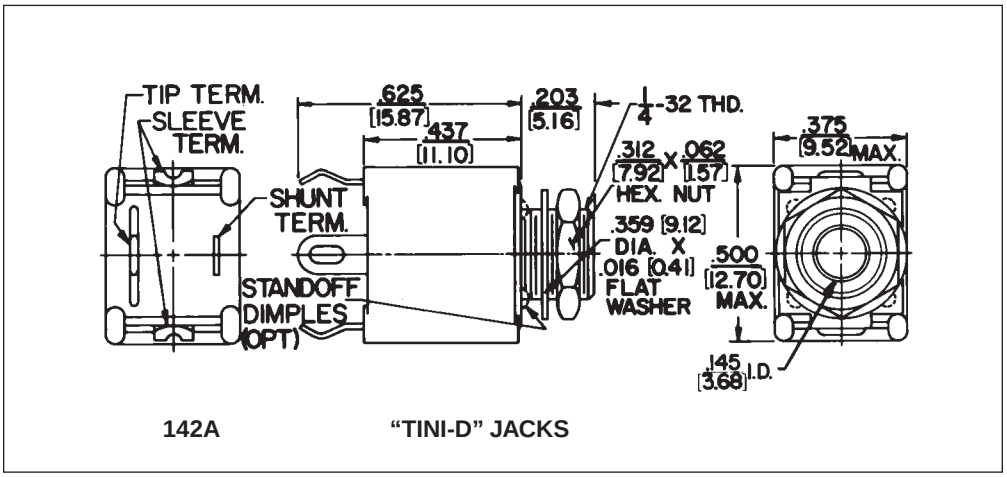

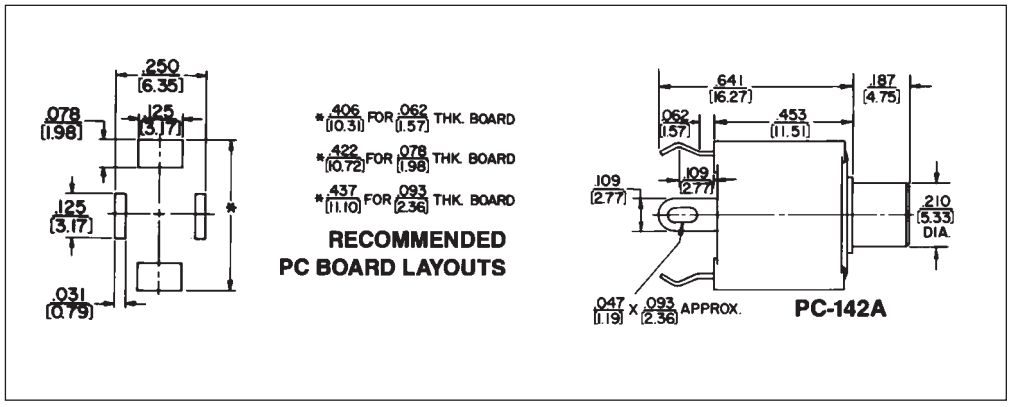

DIMENSIONS ARE FOR REFERENCE ONLY Inch (mm)

* Please visit the product pages on our website for the most up-to-date product information

3.5MM DUAL STEREO JACK

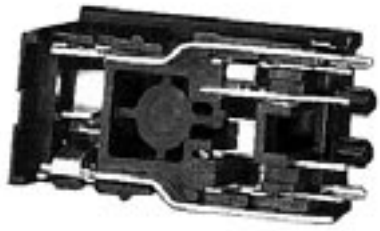



UNSHIELDED - 35RAPC7J



SHIELDED - 35RAPC7JS

FEATURES

- 3-conductor, miniature phone jack mates with 3.5 mm finger plugs.
- Saves board space...two jacks in a single vertical mount footprint.
- Ideally suited for infra-red and convection oven soldering 235°C (455°F).
- Board retention pins accommodate PC board thickness range of .050" to .080".
- Single-screw panel mounting hole is standard.
- EMI-RFI shield, optional.
- Housing UL 94V-0 rated against flammability.

APPLICATIONS

- Multi-media workstations
- Headphones/microphone sets
- Interactive TV
- Audio
- Telecommunications
- Medical
- Computer
- Instrumentation

MATERIALS

Housing: Thermoplastic.
Tip and Ring Springs: Silver-plated copper alloy.
Shunt Terminals: Silver-plated copper alloy.
Sleeve Terminals: Silver-plated copper alloy.
Shield: Pre-tinned copper alloy.

PERFORMANCE SPECIFICATIONS

Insertion/Extraction Forces, initial: 0.8 to 6 pounds.
Dielectric Withstanding Voltage: 500 VAC.
Insulation Resistance, initial: 100 Megaohms, min.
Contact Resistance: Between plug and jack:
50 milliohms, maximum Between springs and shunts:
30 milliohms, maximum.
Life: 5000 cycles, minimum.

ORDERING INFORMATION

Part Number:
Shielded - **35RAPC7JS**
Unshielded - **35RAPC7J**
1. Order by part number.
2. Contact Switchcraft for special order information.

DIMENSIONS ARE FOR REFERENCE ONLY Inch (mm)

® Registered trademark of Switchcraft, Inc.
Note: Contact your Switchcraft Representative for price and delivery

* Please visit the product pages on our website for the most up-to-date product information

3.5MM DUAL STEREO JACK (continued)

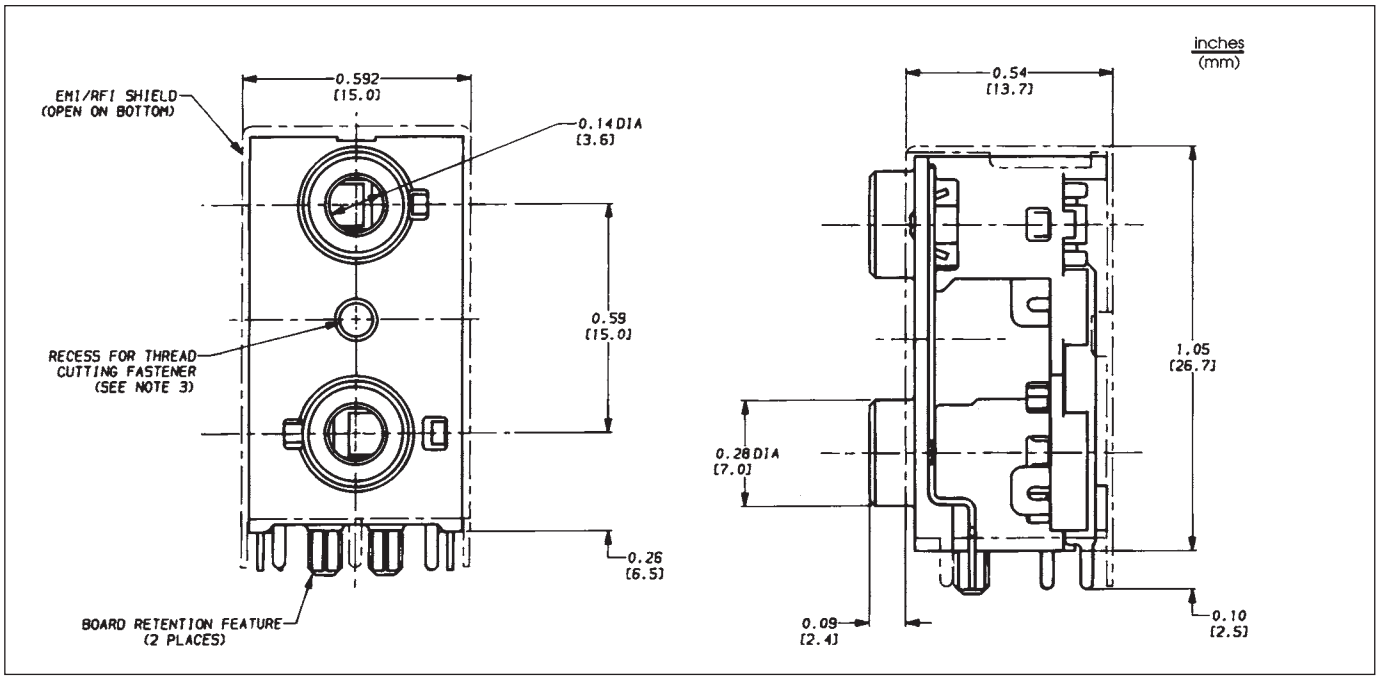

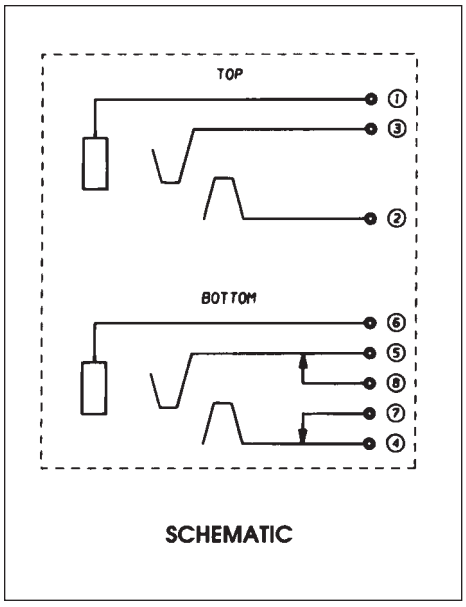

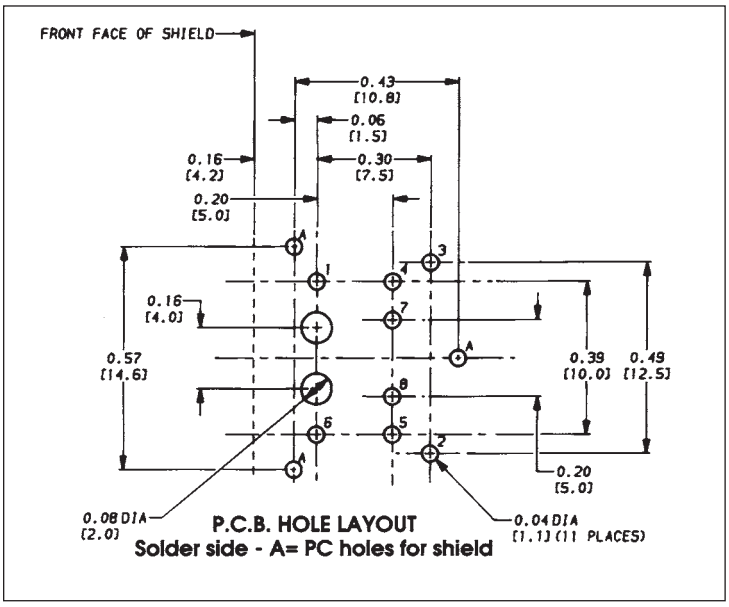

NOTES:
1. Shield isolated from terminals 1 and 6.
2. Width of all terminals = 0.032" (0.814 mm).
3. Use Camcar Textron S25 T8 TORX pan head “Duro-PT” thread cutting fastener of appropriate length or equivalent.

DIMENSIONS ARE FOR REFERENCE ONLY Inch (mm)

* Please visit the product pages on our website for the most up-to-date product information

3.5MM SINGLE MONO AND STEREO JACKS


35RAPC4BV4

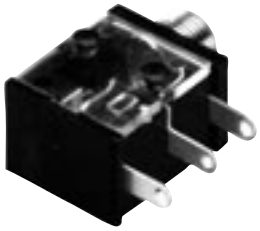
35RAPC2AV


35RAPC2BHN2


35RAPC4BH3

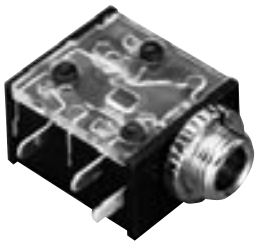
35RAPC2BV4


35RAPC2BH3

FEATURES

- 2 and 3 conductor 3.5mm phone jacks
- Right angle PC mount, true SMT versions, and open frame panel mounts
- Wide variety of circuits available
- Mates with all 3.5mm plugs Right angle PC mount available in low profile, horizontal styles

MATERIALS

Housing: Thermoplastic, UL94V-1
Terminals: Silver-plated, copper alloy
Bushing: Nickel-plated, copper alloy
Performance Specifications:
Contact Resistance: < 50 milliohms
Insulation Resistance: 100 milliohms min.
Dielectric Withstanding Voltage: 250 VAC (35RAPC2BHN2- 500 VAC)
Open Frame Versions Materials:
Housing (35PM2BV2): Thermoplastic, 94V-1
Life: 5000 cycles, min.
Bushing: Nickel-plated, copper alloy
Insulating Washers: Rigid Plastic
Springs: Copper alloy
Sleeve Terminal: Tin-plated, copper alloy
Hardware: Supplied with one, **P11501** nickel-plated brass locknut, and one, S17901 nickel-plated steel flat washer
Performance Specifications:
Contact Resistance: .075 ohms max.
Insulation Resistance: 5,000 Mohms min
Dielectric Withstanding Voltage: 250 VAC Life: 5000 cycles, min

ORDERING INFORMATION

Part numbers which include the letter "N" designate non-threaded bushings.
Part numbers without the letter "N" designate threaded bushing.

Part Number	Description	Height vs. Width	Bushing
35RAPC2AV	mono	vertical	threaded[3]
35RAPC2AHN2	mono	horizontal	non-threaded
35RAPC2AHN3	mono	horizontal	non-threaded
35RAPC2BHN2	stereo	horizontal	non-threaded
35RAPC2BHN3	stereo	horizontal	non-threaded
35RAPC3BHN2	stereo	horizontal	non-threaded
35RAPC3BHN3	stereo	horizontal	non-threaded
35RAPC4BHN2	stereo	horizontal	non-threaded
35RAPC4BHN3	stereo	horizontal	non-threaded
35RAPC2AH3	mono	horizontal	threaded[3]
35RAPC2BH3	stereo	horizontal	threaded[3]
35RAPC3BH3	stereo	horizontal	threaded[3]

Part Number	Description	Height vs. Width	Bushing
35RAPC4BH3	stereo	horizontal	threaded[3]
35RAPC2AV4	mono	vertical	threaded[3]
35RAPC2BV4	stereo	vertical	threaded[3]
35RAPC3BV4	stereo	vertical	threaded[3]
35RAPC4BV4	stereo	vertical	threaded[3]
35RAPC2AVN4	mono	vertical	non-threaded
35RAPC2BVN4	stereo	vertical	non-threaded
35RAPC3BVN4	stereo	vertical	non-threaded
35RAPC4BVN4	stereo	vertical	non-threaded

Replacement Knurl Nut P3345

1. Order by part number
2. Contact Switchcraft for special ordering information
3. Mounting hardware included.

DIMENSIONS ARE FOR REFERENCE ONLY Inch (mm)

® Registered trademark of Switchcraft, Inc.
Note: Contact your Switchcraft Representative for price and delivery

* Please visit the product pages on our website for the most up-to-date product information

3.5MM SINGLE, MONO AND STEREO JACKS (continued)

35RAPC2AV – MONO, VERTICAL, THREADED

MATERIALS
Coil Spring: Steel wire.
Bushing: Nickel-plated copper alloy.
Terminal: Silver-plated copper alloy.
Tip Spring: Silver-plated copper alloy.
Shunt Terminal: Plated copper alloy.
Cover: Thermoplastic, transparent UL 94V-2.
Body: Thermoplastic, UL 94V-1 black color.

PERFORMANCE SPECIFICATIONS
Contact Resistance: 20 milliohms maximum.
Insulation Resistance:
100 milliohms minimum at 250V DC.
Dielectric Withstanding Voltage: 250V AC.
Life: 5000 cycles, minimum.
Insertion Force: 0.88 pounds - 3.5 pounds.
Withdrawal Force: 0.88 pounds - 2.64 pounds.

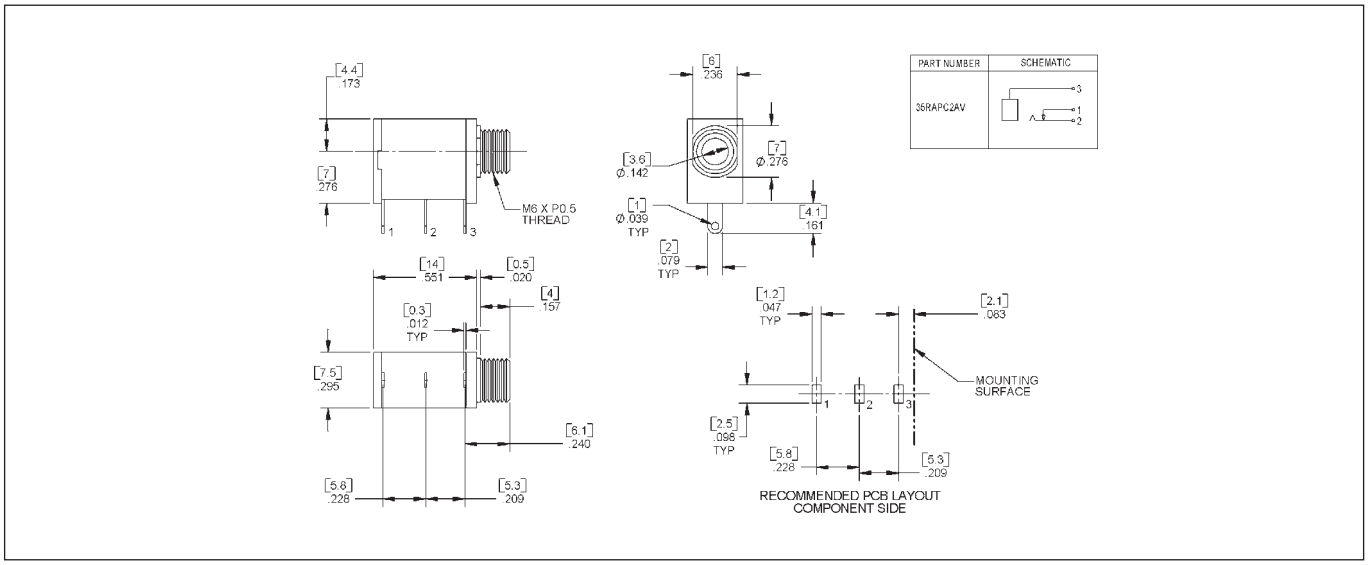

35RAPC2AV4, 35RAPC2BV4, 35RAPC3BV4, 35RAPC4BV4 - STEREO, VERTICAL, THREADED

MATERIALS
Coil Springs: Steel Wire.
Ring Spring: Copper alloy strip, tin alloy plating.
Ground Terminal: Copper alloy strip, tin alloy plating.
Bushing: Nickel-plated copper alloy.
Cover: Thermoplastic, UL 94V-0 black color.
Body: Thermoplastic, UL 94V-0 black color.

PERFORMANCE SPECIFICATIONS
Contact Resistance: 20 milliohms maximum, initial 50 milliohms maximum, after life.
Insulation Resistance: 50 megohms minimum at 500V DC.
Dielectric Withstanding Voltage: 250V AC.
Life: 5,000 cycles, minimum.
Insertion Force: 0.88 lbs. to 3.50 lbs.
Withdrawal Force: 0.88 lbs. to 3.10 lbs.

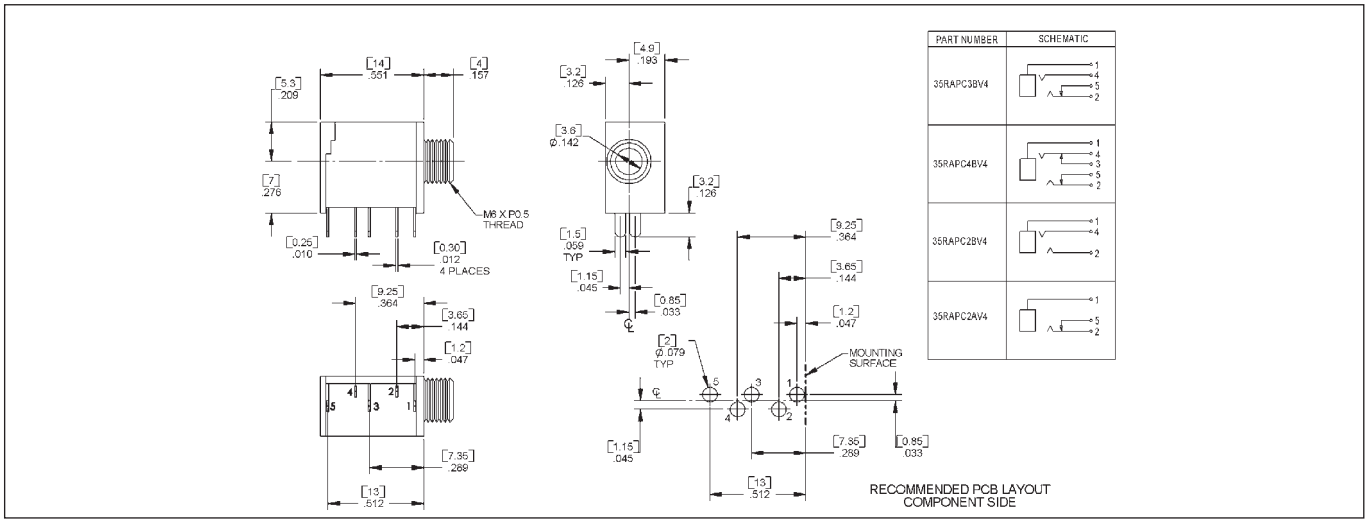

DIMENSIONS ARE FOR REFERENCE ONLY Inch (mm)

* Please visit the product pages on our website for the most up-to-date product information

3.5MM SINGLE, MONO AND STEREO JACKS (continued)

35RAPC2AHN2, 35RAPC2BHN2, 35RAPC3BHN2, 35RAPC4BHN2 - STEREO, HORIZONTAL, NON-THREADED

MATERIALS

Cover: Thermoplastic, UL 94V-1 black color.
Ring Spring: Copper alloy.
Tip Spring: Silver-plated copper alloy.
Ground Terminal: Silver-plated copper alloy.
Metal: Copper alloy, nickel plating.
Body: Thermoplastic, UL 94V-0 black color.

PERFORMANCE SPECIFICATIONS

Contact Resistance: 30 milliohms maximum, initial
100 milliohms maximum, after life.
Insulation Resistance: 100 megohms minimum
at 500V DC.
Dielectric Withstanding Voltage: 500V AC.
Life: 5000 cycles, minimum.
Insertion Force: 0.88 pounds - 6.6 pounds.
Withdrawal Force: 0.88 pounds - 6.6 pounds.

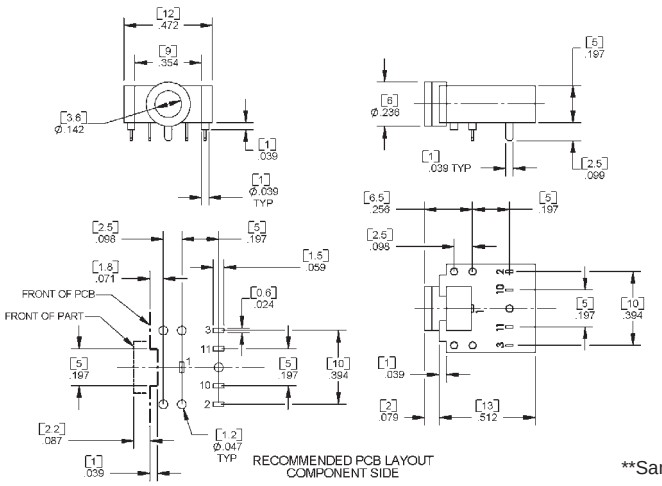

PART NUMBER	SCHEMATIC
35RAPC3BHN2	
35RAPC4BHN2	
35RAPC2BHN2	
35RAPC2AHN2	

**Same drawing for jack with non-threaded bushing.

35RAPC2AH3, 35RAPC2BH3, 35RAPC3BH3, 35RAPC4BH3 - STEREO, HORIZONTAL, THREADED

MATERIALS

Coil Springs: Steel wire.
Tip Spring: Silver-plated copper alloy.
Ring Spring: Silver-plated copper alloy.
Ground Terminal: Silver-plated copper alloy.
Bushing: Nickel-plated copper alloy.
Cover: Thermoplastic, transparent UL 94V-2.
Body: Thermoplastic, UL 94V-1 black color.

PERFORMANCE SPECIFICATIONS

Contact Resistance: 20 milliohms maximum, initial
100 milliohms maximum, after life.
Insulation Resistance: 100 megohms minimum.
Dielectric Withstanding Voltage: 250V AC.
Life: 5000 cycles, minimum.
Insertion Force: 0.88 lbs. - 3.50 lbs.
Withdrawal Force: 0.88 lbs. - 3.10 lbs.

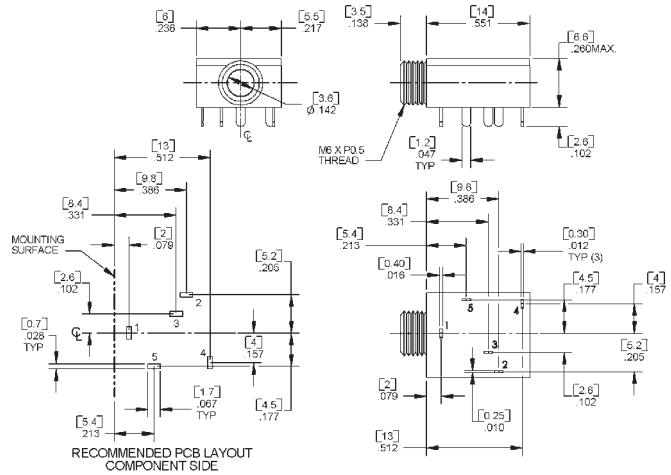

PART NUMBER	SCHEMATIC
35RAPC3BH3	
35RAPC4BH3	
35RAPC2BH3	
35RAPC2AH3	

DIMENSIONS ARE FOR REFERENCE ONLY Inch (mm)

® Registered trademark of Switchcraft, Inc.
Note: Contact your Switchcraft Representative for price and delivery

* Please visit the product pages on our website for the most up-to-date product information

3.5MM SINGLE MONO AND STEREO JACKS

Switchcraft introduces a new series of 3.5mm jacks. These low profile jacks come in a wide variety of circuits, both 2 and 3 conductor versions. Circuits include mono closed, stereo open, stereo tip closed and ring open, and stereo closed. The 35RASMT Series is available on tape and reel only. Contact Switchcraft for exact dimensions of the reels. They're designed for use in today's electronic equipment that features remote speakers, headsets, and headphones. While they are more compact than commonly used PC mount phone jacks, they are still extremely durable. Jacks come on tape and reel, 1K per reel.



35RASMT

FEATURES AND BENEFITS

- SMT mounting
- Tape and reel packaging
- Wide variety of circuits

APPLICATIONS

- Computer
- Video Cameras
- Personal/Portable Audio Devices
- Multimedia

SPECIFICATIONS

Electrical Current Rating: 3A
Contact Resistance: <50 mohms
Insulation Resistance: 100 mohms (min.)
Dielectric Withstanding Voltage: 250VAC @ 1 minute

MECHANICAL

Lifecycles: 5,000
Operating Temperature: -25°C to +85°C

MATERIAL

Housing: Black thermoplastic
Sleeve, Ring and Tip Terminals:
Copper Alloy, silver-plated
Shunt Terminal: Copper Alloy, Silver-plated

3.5MM SINGLE MONO AND STEREO JACKS

Part Number/Description
35RASMT2AHNTR Mono, closed circuit, on tape and reel
35RASMT2BHNTR Stereo, dual open circuit, on tape and reel
35RASMT3BHNTR Stereo, tip closed and ring open circuit, on tape and reel
35RASMT4BHNTR Stereo, dual closed circuit, on tape and reel

(See next page for drawings.)

DIMENSIONS ARE FOR REFERENCE ONLY Inch (mm)

* Please visit the product pages on our website for the most up-to-date product information

3.5MM SINGLE MONO AND STEREO JACKS (continued)

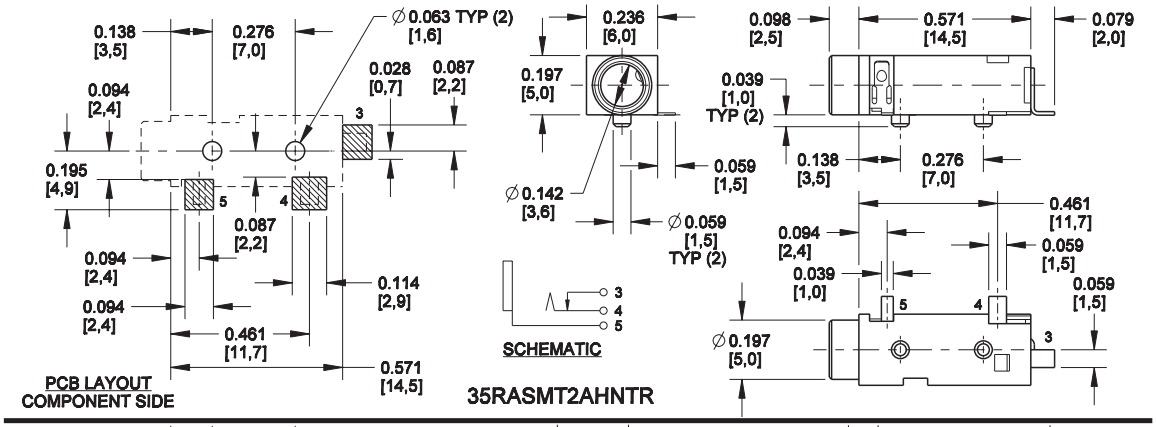

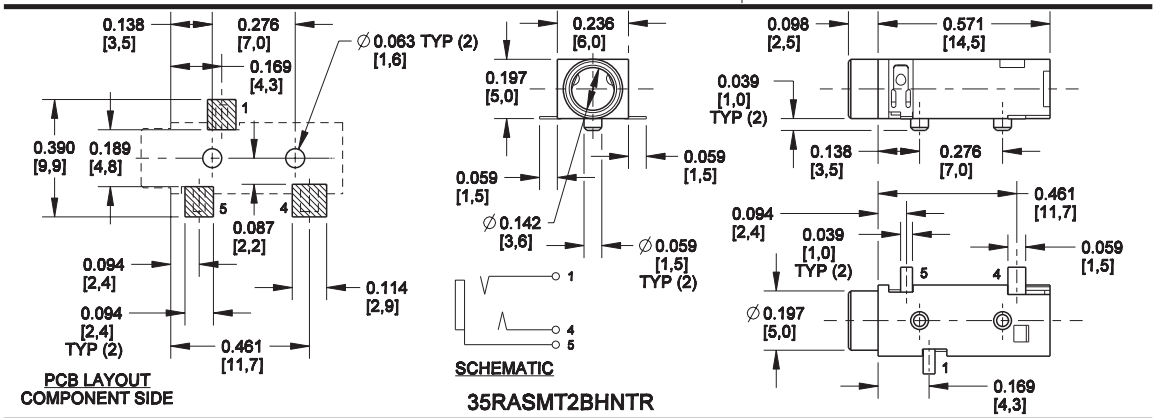

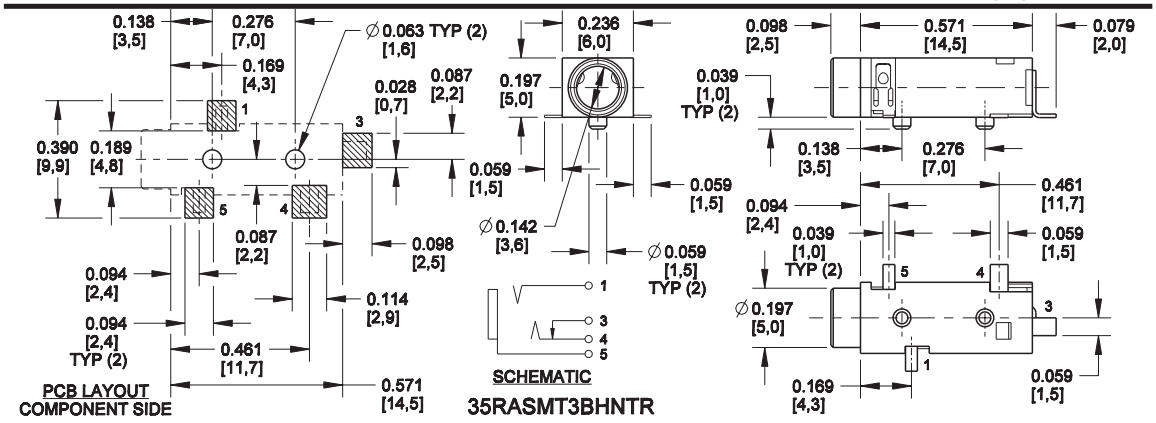

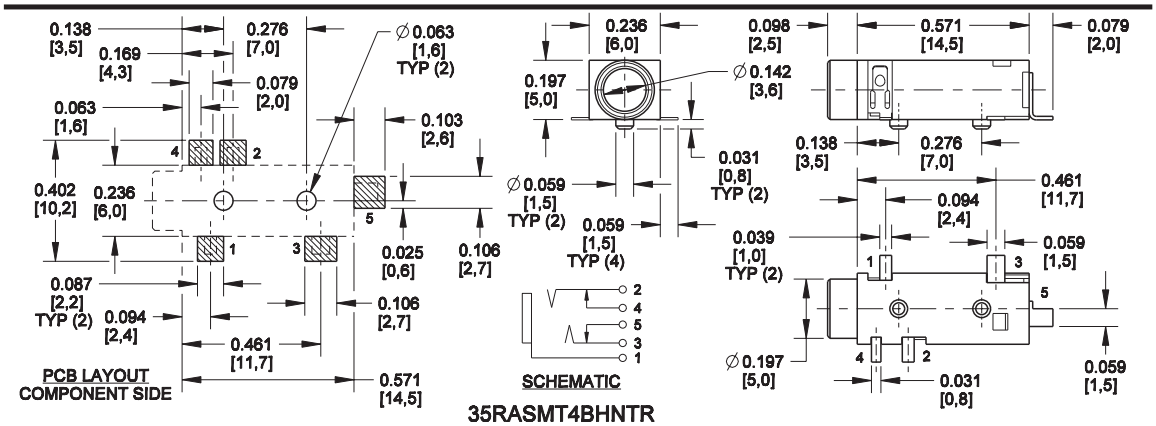

DIMENSIONS ARE FOR REFERENCE ONLY Inch (mm)

® Registered trademark of Switchcraft, Inc.
Note: Contact your Switchcraft Representative for price and delivery

* Please visit the product pages on our website for the most up-to-date product information

3.5 mm SINGLE MONO JACKS



35PM1

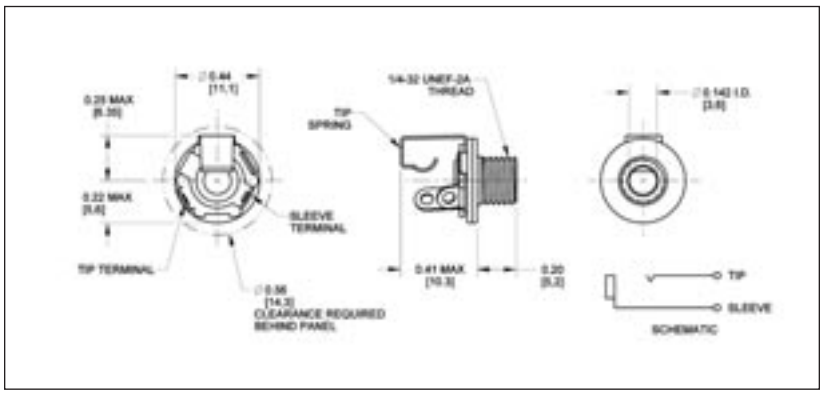



35PM2A

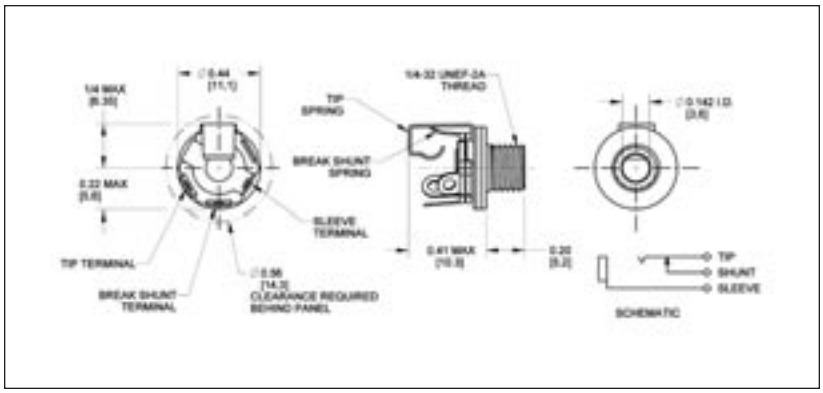

FEATURES

- 2-conductor phone jacks similar to Littel-Jax® phone jacks, but smaller.
- For connecting in limited space
- Mate with 3.5 mm phone plugs
- Notched insulators interlock internal parts
- Mounting hole: .250" diameter in panels up to .125" thick (mounting hardware supplied)
- For insulated mount, order two washers separately, Number S1564 (swedged fiber washer .312" diameter mounting hole) and number S2207 (flat phenolic washer)

SPECIFICATIONS

MECHANICAL

Life: 5,000 insertion/withdrawal cycles, minimum

ELECTRICAL

Contact Resistance: .075 ohms maximum
Insulation Resistance: 5,000 MΩ minimum
Dielectric Withstanding Voltage: 250V AC maximum
Contact Rating: .25A, 48V DC

MATERIAL

Mounting Bushing: Nickel-plated copper alloy.
Insulating Spacers: Rigid plastic.
Springs: Copper alloy.
Sleeve Terminal: Tin-plated copper alloy.
Hardware: Supplied with one, Number P11501 nickel-plated brass locknut, and one, Number S17901 nickel-plated steel flat washer.

PART NUMBER	DESCRIPTION	JACK SCHEMATIC[1]	TYPICAL MATING PLUG
35PM1	Open circuit	I	750
35PM2A	Shunted (closed circuit)	III	750

1. See jack schematics on pages 79 and 80.

ORDERING INFORMATION

1. Order by part number.
2. Contact Switchcraft for more information.

DIMENSIONS ARE FOR REFERENCE ONLY Inch (mm)

* Please visit the product pages on our website for the most up-to-date product information

2.5MM SINGLE MONO AND STEREO JACKS

Switchcraft introduces a new series of 2.5mm jacks. These low profile jacks come in a wide variety of circuits, both 2 and 3 conductor versions. Circuits include mono closed, stereo open, stereo tip closed and ring open, and stereo closed. The MDSMT Series is available on tape and reel only. Contact Switchcraft for exact dimensions of the reels. They're designed for use in today's electronic equipment that features remote speakers, headsets, and headphones. While they are more compact than commonly used PC mount phone jacks, they are still extremely durable.

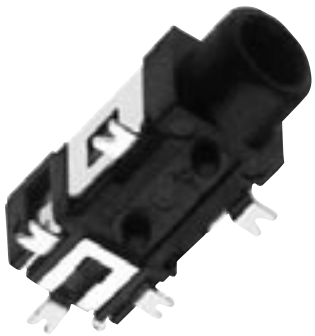

MDSMT4BRATR

FEATURES AND BENEFITS

- SMT mounting
- Tape and reel packaging
- Wide variety of circuits

APPLICATIONS

- Computer
- Video Cameras
- Personal/Portable Audio Devices
- Multimedia

SPECIFICATIONS

Electrical Current Rating: 3A
Contact Resistance: <50 mohms
Insulation Resistance: 100 mohms (min.)
Dielectric Withstanding Voltage: 250VAC @ 1 minute

MECHANICAL

Lifecycles: 5,000
Operating Temperature: -25°C to +85°C

MATERIAL

Housing: Black thermoplastic
Sleeve, Ring and Tip Terminals: Copper Alloy, silver-plated
Shunt Terminal: Copper Alloy, Silver-plated

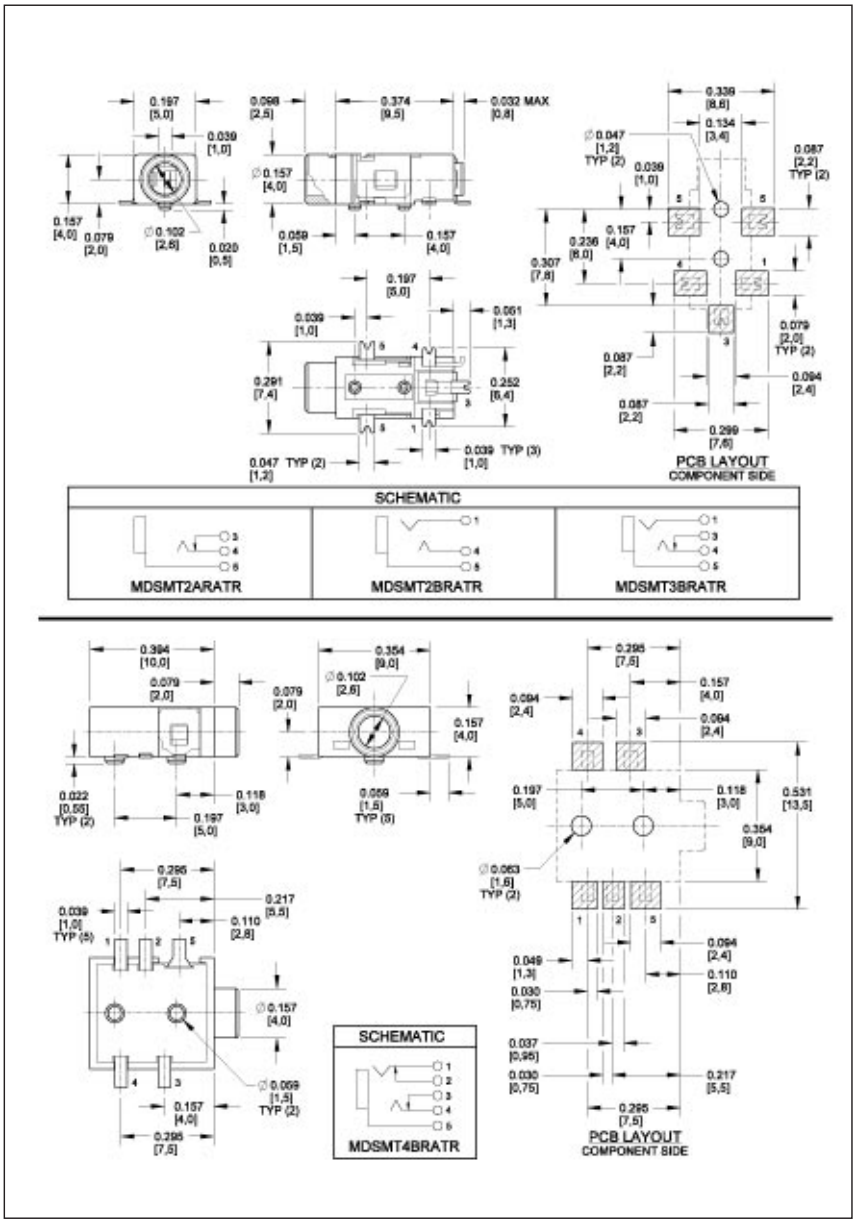

2.5MM SINGLE MONO AND STEREO JACKS

Part Number/Description
MDSMT2BRATR Stereo, dual open circuit
MDSMT2ARATR Mono, closed circuit
MDSMT3BRATR Stereo, tip closed and ring open circuit
MDSMT4BRATR Stereo, dual closed circuit

DIMENSIONS ARE FOR REFERENCE ONLY Inch (mm)

® Registered trademark of Switchcraft, Inc.
Note: Contact your Switchcraft Representative for price and delivery

* Please visit the product pages on our website for the most up-to-date product information

.101" SUBMINIATURE PHONE JACKS

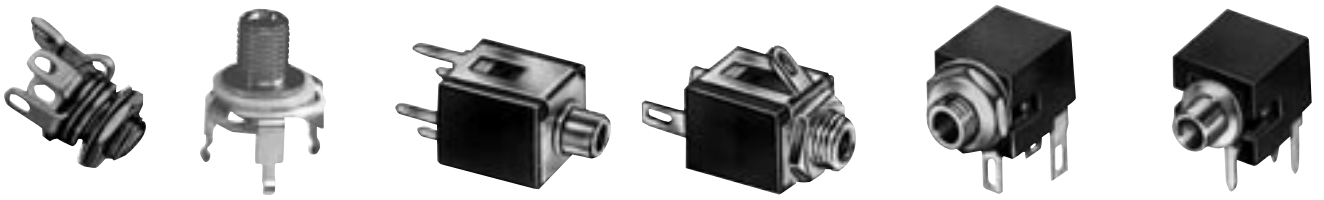

TR2A TR1PC MDPC2A MDSL2A MDSL2ARA MDPC2ARA

SUBMINIATURE PHONE JACKS, TR2A AND TR1PC

Extremely small, rugged, shunted Micro-Jax® 2-conductor jack is 1/4 the size of a standard phone jack and weighs less than 1/20 ounce. Can be wired for open or closed circuit operation. Internally keyed insulators interlock all parts and tip springs grip mating plugs positively. Mates with Switchcraft Micro-Plug® phone plugs. Jacks mount through .190" diameter hole in chassis/panels up to .093" thick. For insulated mounting, a .281" diameter hole and .050" maximum panel thickness applies. Order insulating washer separately. Number **P1617** (flat phenolic washer) and Number **P1618** (swedged fiber washer).

Number TR1PC: 2-conductor closed circuit jack with PC terminals. Open frame and enclosed versions available. Mates with Switchcraft® Micro Plug® numbers 850, 855, and 880.

SUBMINIATURE ENCLOSED PHONE JACKS

Micro-D Jax® 2-conductor jacks have insulated box construction and subminiature size.

Number MDPC2A: 2-conductor closed circuit jack with PC terminals. Mounts to single-, double-sided or multilayer boards either singly or in rows as close as .344" centers (+/- .01 inches). Bushing is .10" inside diameter.

Number MDSL2A: Same as MDPC2A except, 1. solder lugs, 2. bushing is #10-48 threaded (nut and washer supplied), and 3. mount ing centers are .35" or .313". When mounted on .313" centers, sleeves or adjacent jacks may be in intimate contact. Mounts through a .203" diameter hole in chassis/panels up to .063" thick.

SUBMINIATURE RIGHT-ANGLE PHONE JACKS

2-conductor jacks have molded housing which protects all internal parts. Panel/chassis or PC boards mounting in rows, if desired, on .351" centers. PC terminals need only .382" behind-panel clearance.

Number MDPC2ARA: PC terminals mount/terminate directly to PC or multilayer boards. Bushing clears a .156" diameter panel hole.

Number MDSL2ARA: Right-angle solder lugs and #10-48 threaded bushing for chassis/panel mount. Mounts in .203" diameter hole in chassis/panels up to .063" thick.

SPECIFICATIONS - MICRO-JAX® ELECTRICAL:

Contact Resistance: .10 ohms maximum (spring to plug).
Shunt Resistance: .10 ohms maximum.
Dielectric Withstanding Voltage: 250 V AC.
Shunt Tension: 60 grams minimum.

MATERIAL:

Mounting Bushing: Nickel-plated copper alloy.
Insulating Spacers: Rigid plastic.
Springs: Nickel-plated copper alloy. Integral contacts are plated.
Tip, Shunt and Sleeve Terminals: Silver-plated copper alloy.
Hardware: Supplied with one, **P15331** nickel-plated copper alloy hex nut, and one **S29571** nickel-plated copper alloy flat washer.

MATERIAL - TR1PC

Threaded Bushing: Nickel-plated copper alloy.
Tip Spring: Copper alloy.
Sleeve/Ground Terminal: Copper alloy tin-lead with nickel underplate.

MECHANICAL - TR1PC:

Life: 10,000 insertion/withdrawal cycles, minimum.
Insertion/Withdrawal Forces: 11 ounces insertion, 11 ounce minimum withdrawal.

ENVIRONMENTAL - TR1PC:

Thermal Range: -55°C to +85°C (non-operating); -20°C to +65°C (operating).
Thermal Shock: Per MIL-STD-202, method 107.
Humidity: Per MIL-STD-202, method 106.
Salt Spray: Per MIL-STD-202, method 101.

SPECIFICATIONS - MICRO-D JAX MECHANICAL:

Life: 10,000 insertion/withdrawal cycles minimum.
Insertion/Withdrawal Forces: 11 ounce insertion, 11 ounce minimum withdrawal.

ELECTRICAL:

Contact Resistance: .010 ohms maximum (initial), .020 ohms maximum (after humidity, durability exposure), .10 ohms maximum (after salt spray).
Insulation Resistance: 10,000 MΩ minimum (initial), 1,000 MΩ minimum (after humidity, durability exposure).
Dielectric Withstanding Voltage: 500 V AC maximum.
Contact Rating: .125 A, 125 V AC.

ENVIRONMENTAL:

Thermal Range: -55°C to +85°C (non-operating); -20°C to +65°C (operating).
Thermal Shock: Per MIL-STD-202, method 107.
Humidity: Per MIL-STD-202, method 106.
Salt Spray: Per MIL-STD-202, method 101.

MATERIAL:

Housing: Glass reinforced plastic. **Insulation:** Rigid plastic.
Mounting Bushing (Micro-D): Nickel-plated copper alloy.
Mounting Bracket (Right-Angle Micro-D): Nickel-plated copper alloy.
Tip Spring: Silver-plated copper alloy.
Shunt Terminal: Silver-plated copper alloy.
Sleeve Terminal (Micro-D): Steel, tin-plated.
Sleeve Terminal (Right-Angle Micro-D): Silver-plated copper alloy.
Hardware (Micro-D): Same as Micro-Jax (MDSL2A).
Hardware (Right-Angle Micro-D): Hex nut, nickel-plated copper alloy, **Number P15331**; flat washer, nickel-plated copper alloy **S29571**; not supplied with MDPC2A.

Part No.	Jack Schem.[1]	Typical Mating Plug[2]	Part No.	Jack Schem.[1]	Typical Mating Plug[2]
TR2A, TR1PC, MDPC2A	III	850	MDSL2A, MDPC2ARA, MDSL2ARA	III	850

All are 2-Conductor (closed circuit). Note 1.: See Jack Schematics page 79 and 80. Note 2.: See Plugs Section for mating information.

DIMENSIONS ARE FOR REFERENCE ONLY Inch (mm)

* Please visit the product pages on our website for the most up-to-date product information

.101" SUBMINIATURE PHONE JACKS

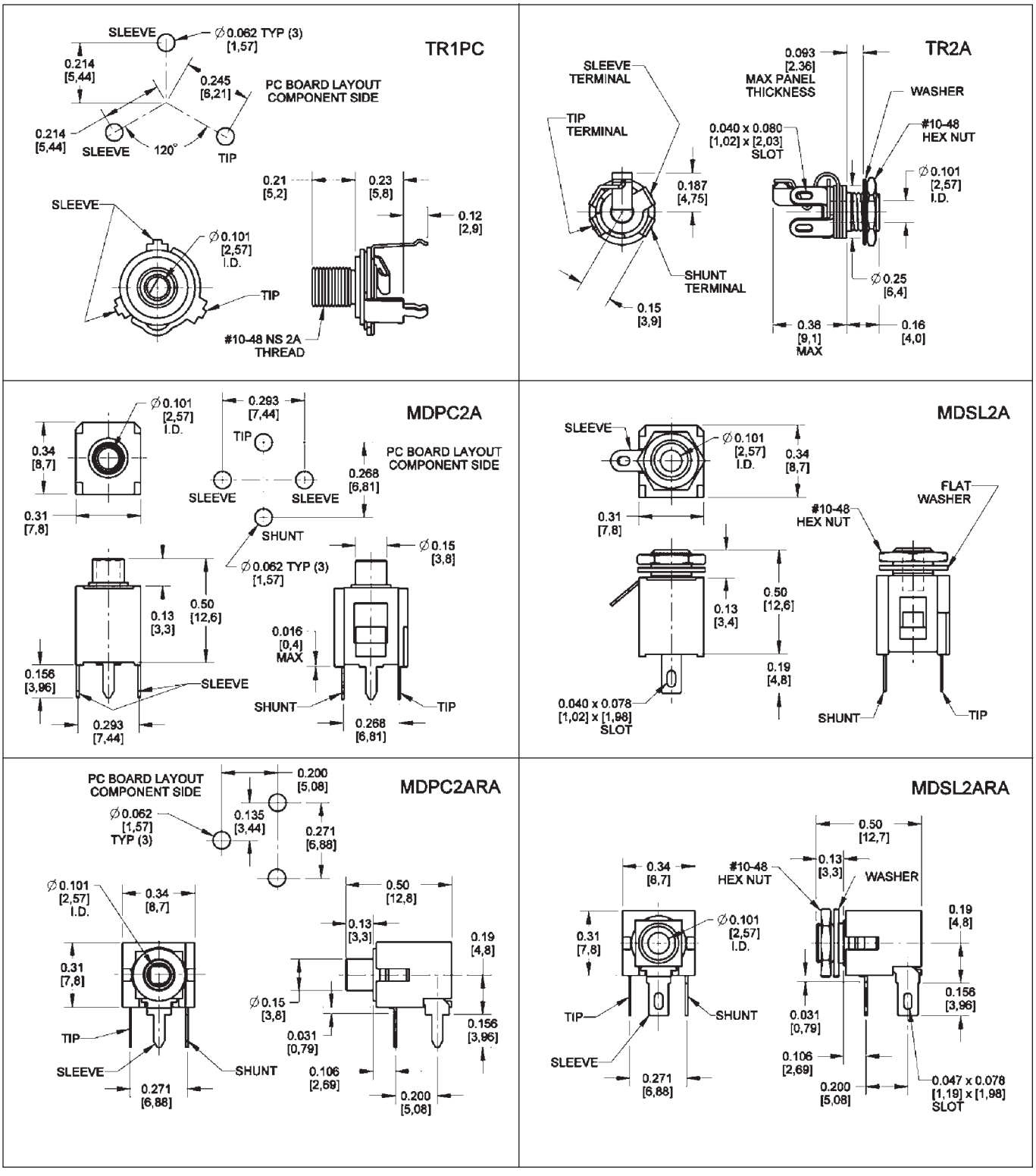

DIMENSIONS ARE FOR REFERENCE ONLY Inch (mm)

® Registered trademark of Switchcraft, Inc.
Note: Contact your Switchcraft Representative for price and delivery

* Please visit the product pages on our website for the most up-to-date product information

BULKHEAD PHONO JACKS


3501F


3501FP


3501FR


3514PC


3515PC




3517PC


BPJR01


BPJF01


BPJJ01


3505F


3503

FEATURES AND BENEFITS

- Front or rear mount configurations
- Durable plated machined brass construction
- All mounting hardware is included

APPLICATIONS

- Audio
- Video
- General Purpose Electronics

OPTIONS

- Front or rear mount solder type receptacles
- Jack to jack bulkhead configuration
- Insulator colors
- Gold or nickel plating

(See next page for drawings.)

SPECIFICATIONS

Material and Platings Housing:
Nickel or Gold-plated Brass
Contact: Nickel-plated Brass **Insulator:** ABS
Hardware: Nickel-plated Brass. Switchcraft introduces a complete line of bulkheadmount phono (RCA) jacks to meet the most critical audio, audio/video, and general-purpose electronic applications. These jacks are offered in front and rear mount solder type as well as jack to jack bulkhead configurations. These jacks are available with black, white, blue, green, red, and yellow insulators and nickel or gold plated bodies. All mounting hardware is included.
Housing: Nickel or gold plated, copper alloy
(3514PC, 3515PC, 3517PC: Nickel plated, steel)
Terminals: Nickel plated, copper alloy (3515PC: Tin plated, copper alloy)
Bushing: Nickel-plated, copper alloy (3515PC: Ceramic)
Insulators: Thermoplastic
(3517PC: Ceramic and glass filled thermoplastic)

Part Number	Description
BPJR01	Rear mount, black insulator
BPJR01AU	Rear mount, black insulator, gold plated
BPJR02	Rear mount, red insulator
BPJR02AU	Rear mount, red insulator, gold plated
BPJR03	Rear mount, white insulator
BPJR03AU	Rear mount, white insulator, gold plated
BPJR04	Rear mount, yellow insulator
BPJR04AU	Rear mount, yellow insulator, gold plated
BPJR05	Rear mount, blue insulator
BPJR05AU	Rear mount, blue insulator, gold plated
BPJR06	Rear mount, green insulator
BPJR06AU	Rear mount, green insulator, gold plated
3501F	Rear mount, rigid plastic mounting flange
3501FR	Rear mount, natural insulator
For insulated mounting, order S1028 and S1029 insulating washers	
BPJF01	Front mount, black insulator
BPJF01AU	Front mount, black insulator, gold plated
BPJF02	Front mount, red insulator
BPJF02AU	Front mount, red insulator, gold plated
BPJF03	Front mount, white insulator
BPJF03AU	Front mount, white insulator, gold plated
BPJF04	Front mount, yellow insulator
BPJF04AU	Front mount, yellow insulator, gold plated

Part Number	Description
BPJF05	Front mount, blue insulator
BPJF05AU	Front mount, blue insulator, gold plated
BPJF06	Front mount, green insulator
BPJF06AU	Front mount, green insulator, gold plated
3501FP	Front Mount, natural insulator
3505F	RF version, uses low-loss nylon insulation
For insulated mounting, order S2207 and S1564 insulating washers	
BPJJ01	Feed through, black insulator
BPJJ01AU	Feed through, black insulator, gold plated
BPJJ02	Feed through, red insulator
BPJJ02AU	Feed through, red insulator, gold plated
BPJJ03	Feed through, white insulator
BPJJ03AU	Feed through, white insulator, gold plated
BPJJ04	Feed through, yellow insulator
BPJJ04AU	Feed through, yellow insulator, gold plated
BPJJ05	Feed through, blue insulator
BPJJ05AU	Feed through, blue insulator, gold plated
BPJJ06	Feed through, green insulator
BPJJ06AU	Feed through, green insulator, gold plated
3503	Extension jack, shielded handle
3514PC	Vertical PC mount, nickel plated steel bushing
3515PC	Vertical PC mount, ceramic bushing
3517PC	Horizontal PC mount, nickel plated steel bushing

DIMENSIONS ARE FOR REFERENCE ONLY Inch (mm)

* Please visit the product pages on our website for the most up-to-date product information

PHONO JACKS (continued)

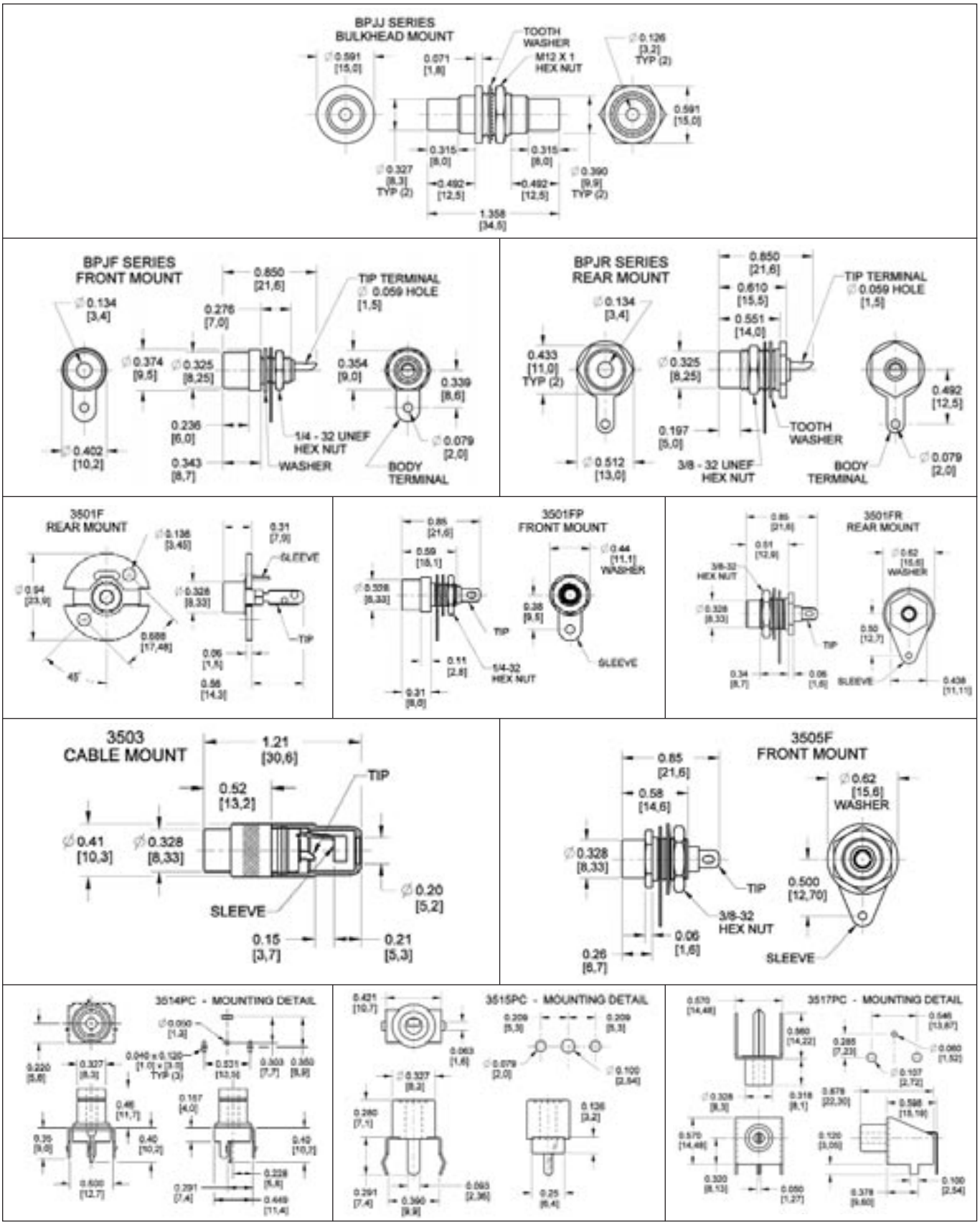

DIMENSIONS ARE FOR REFERENCE ONLY Inch / (mm)

® Registered trademark of Switchcraft, Inc.
Note: Contact your Switchcraft Representative for price and delivery

* Please visit the product pages on our website for the most up-to-date product information

PHONO JACKS AND PHONO JACK SETS


PJRAN1X1U03


PJRAS1X1S04


PJRAS1X2S02


PJRAN2X1U02

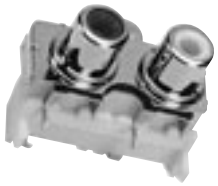
PJRAS2X1S01

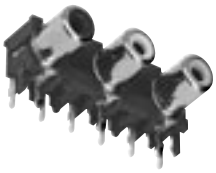
PJRAN3X1U03

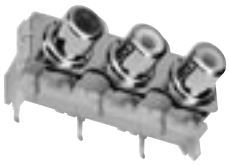
PJRAS3X1S01

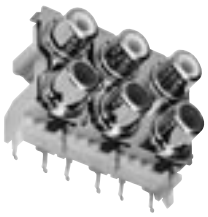
PJRAS3X2S01

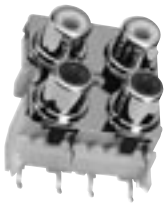
PJRAS2X2S01

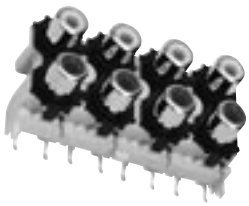
PJRAS4X2U01


PJRAS1X3S01


PJRAN3X1U02


PJRAS1X3U01

Switchcraft, the industry recognized leader in audio-video connectivity, introduces the addition of a comprehensive line of PCB Mount RCA Jacks and Jack Sets. Switchcraft's newest product family addresses the requirements of the most critical audio and audio/video applications. 1, 2, 3, 4, 6, and 8 position jack sets are offered in a variety of color combinations with numerous plating, grounding, shielding, mounting, and justification options.

FEATURES AND BENEFITS
- High temperature plastic housings and long life contacts
- Snap fit PCB contacts and housings
- Low profile footprint
- Numerous options and configurations

APPLICATIONS
- Audio
- Video
- General Purpose Electronics

OPTIONS
- Right angle and straight PCB mount
- Horizontal and vertical justification
- Shielding and grounding
- Bulkhead mounting screw
- Colors
- Plating

SPECIFICATIONS
ELECTRICAL
Temperature Range: -25 to +80°C
Rated Voltage: 34V DC or AC
Withstand Voltage: 500V
Rated Current: 2A DC or AC
Dielectric Strength: 500V AC @ 1 minute
Contact Resistance: <30 mohms
Insertion Force*: <29.4N
Extraction Force*: 1N to 29.4N
* Depends Upon Mating Plug

MATERIAL AND PLATINGS
Housing: UL94-HB Rated, ABS
Insulators: ABS
Ground Shell and Terminal: Nickel or Gold Plated, Copper Alloy
Terminals: Tin Plated Copper Alloy

DIMENSIONS ARE FOR REFERENCE ONLY Inch (mm)

* Please visit the product pages on our website for the most up-to-date product information

PHONO JACKS AND PHONO JACK SETS (continued)

1 POSITION PCB MOUNT

Part Number	Color
PJRAN1X1U01	Black
PJRAN1X1U02	White
PJRAN1X1U03	Red
PJRAN1X1U04	Yellow
Call factory	Green
Call factory	Blue
PJRAS1X1S01	Black
PJRAS1X1S02	White
PJRAS1X1S03	Red
PJRAS1X1S04	Yellow
Call factory	Green
Call factory	Blue

3 POSITION PCB MOUNT

Part Number	Color
PJRAN3X1U01	Red/Yellow/White
PJRAN3X1U02	Red/Green/Blue
PJRAS3X1S01	Red/White/Yellow
PJRAS3X1U03	Red/Green/Blue
PJRAS1X3S01	Red White Yellow
PJRAS1X3S02	Green Blue Red

2 POSITION PCB MOUNT

Part Number	Color
PJRAN2X1U01	Red/White
PJRAN2X1U02	White/Red
PJRAS2X1S01	Red/White
PJRAS2X1S02	White/Red
PJRAS1X2S01	Red White
PJRAS1X2S02	White Red

4, 6, & 8 POSITION PCB MOUNT

Part Number	Color
PJRAS2X2S01	White x 2 Red x 2
PJRAS3X2S01	White x 3 Red x 3
PJRAS3X2S02	Red/White/Yellow Red/White/Yellow
PJRAS4X2U01	White x 4 Red x 4

COMBINATION PHONO AND S-VIDEO PCB MOUNT

Part Number	Color
PJRAN3X1U02	Red/White/Yellow
PJRAS1X3U01	Yellow White Red

Ordering Information (Contact factory for color, shielding, grounding, justification options.)

PJ	RA	S	#	X	#	S	01	AU
Product Type	Justification	Mounting	Positions Horizontal		Positions Vertical	Shielding	Version	Ground Shell Plating
Phono Jack	RA - Right Angle ST - Straight	S - Screw(s) N - No Screws	1,2,3, or 4	By	1,2, or 3	S - Shielded U - Unshielded		AU/Gold

DIMENSIONS ARE FOR REFERENCE ONLY Inch (mm)

® Registered trademark of Switchcraft, Inc.
Note: Contact your Switchcraft Representative for price and delivery

* Please visit the product pages on our website for the most up-to-date product information

PHONO JACKS AND PHONO JACK SETS (continued)

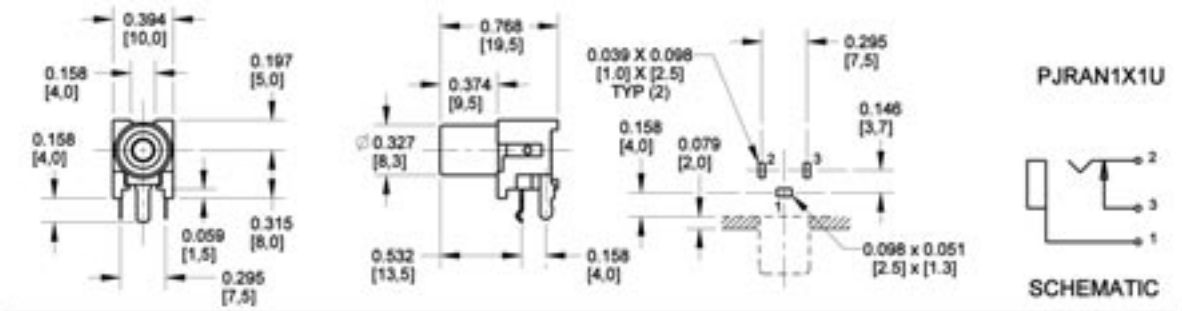

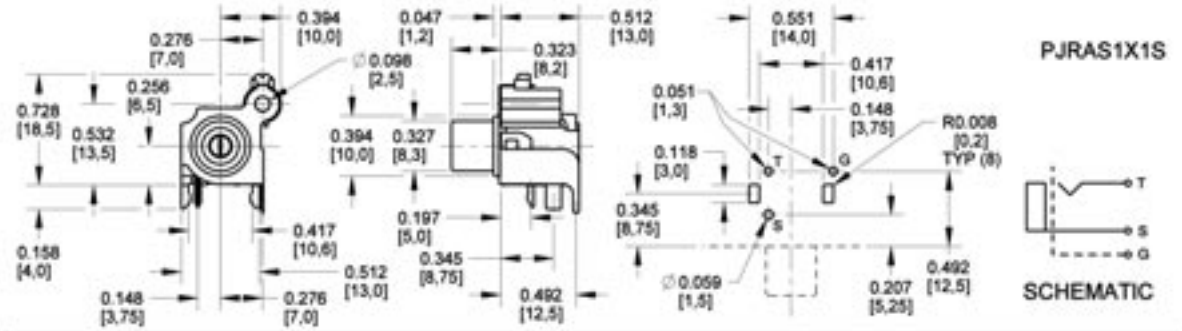

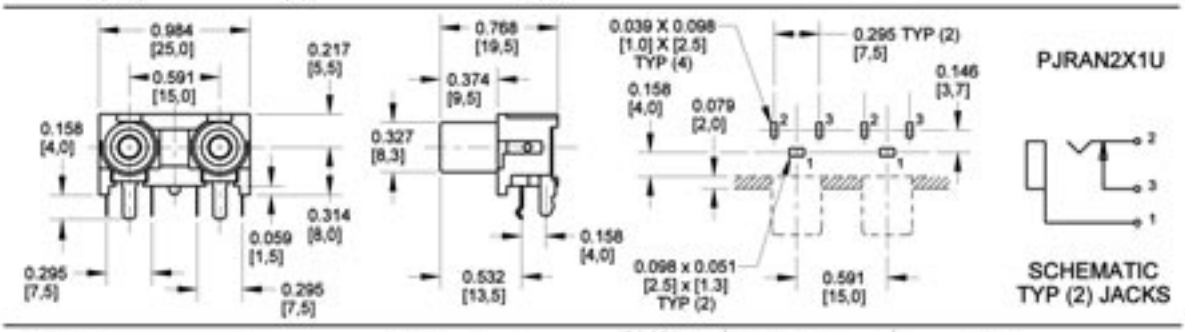

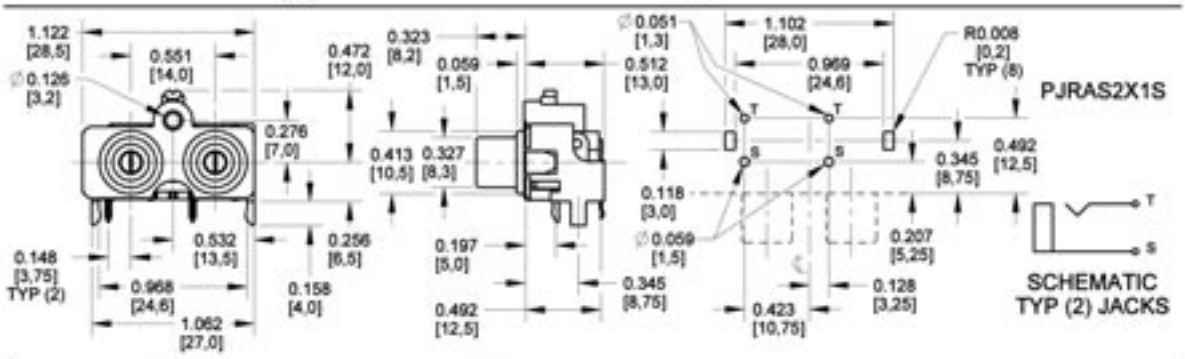

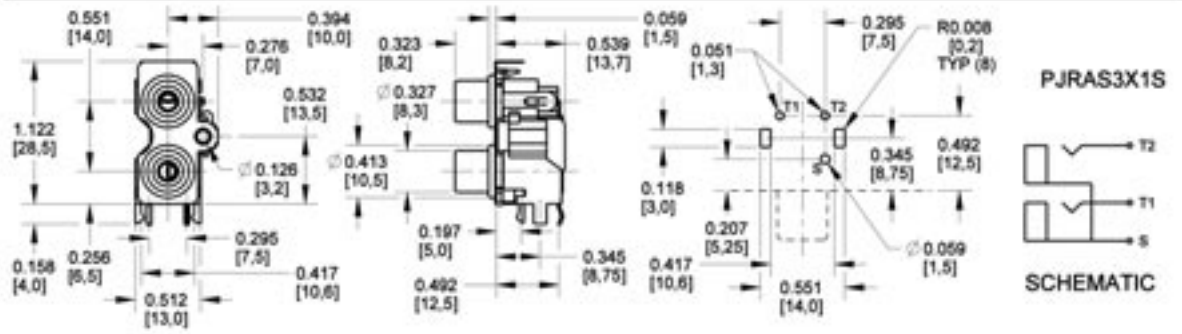

DIMENSIONS ARE FOR REFERENCE ONLY Inch (mm)

* Please visit the product pages on our website for the most up-to-date product information

PHONO JACKS AND PHONO JACK SETS (continued)

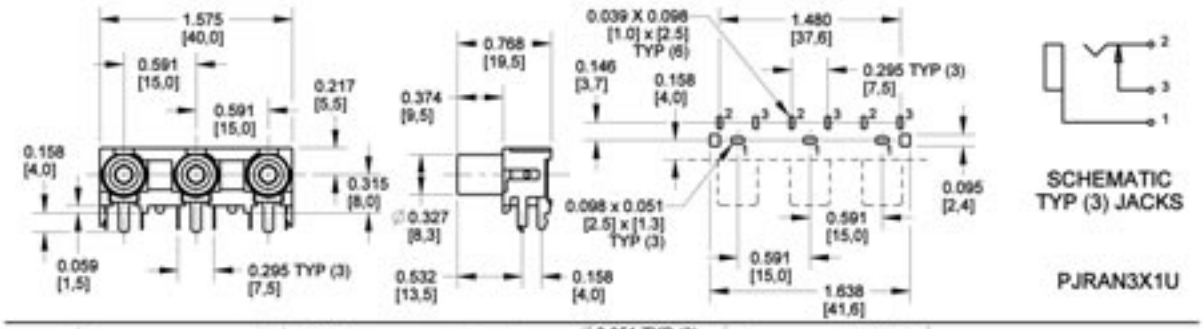

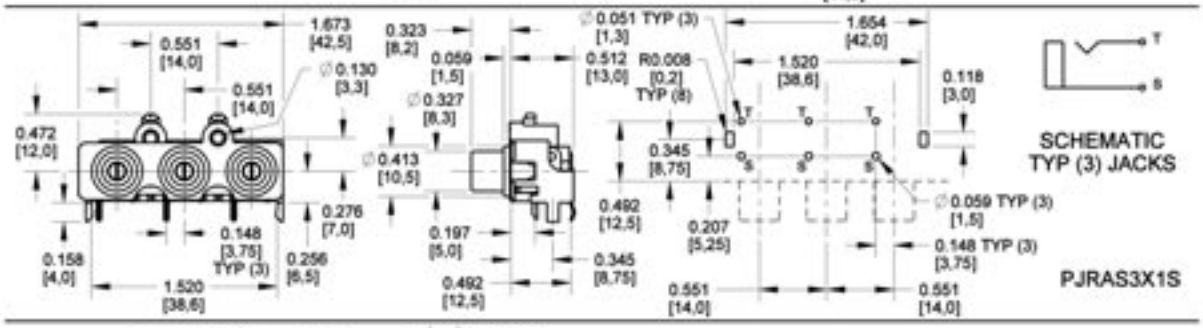

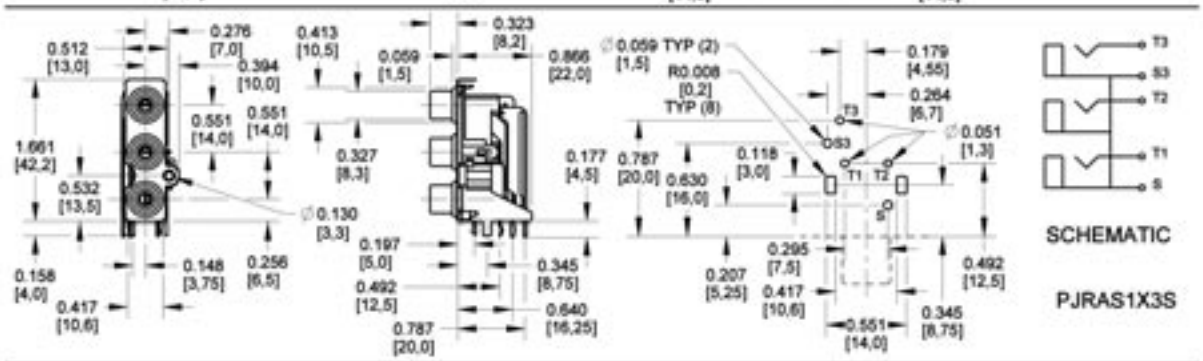

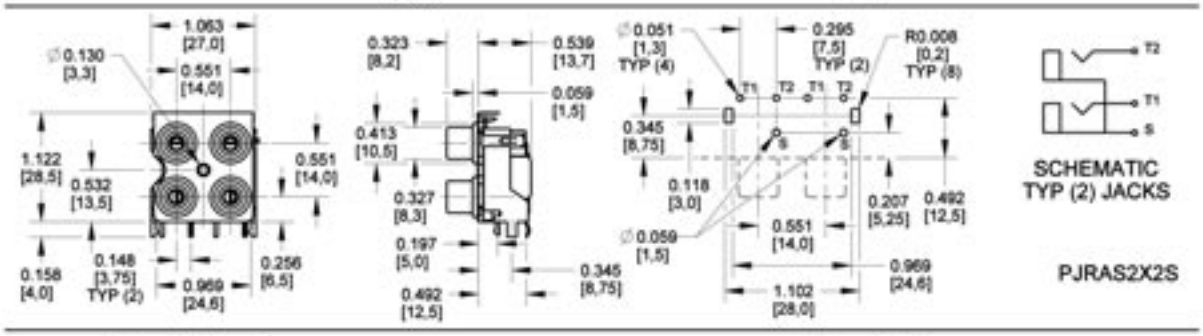

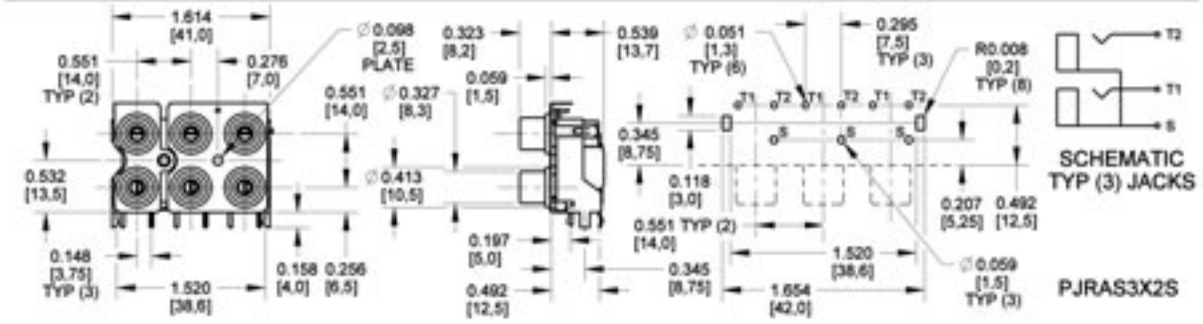

DIMENSIONS ARE FOR REFERENCE ONLY Inch / (mm)

® Registered trademark of Switchcraft, Inc.
Note: Contact your Switchcraft Representative for price and delivery

* Please visit the product pages on our website for the most up-to-date product information

PHONO JACKS AND PHONO JACK SETS (continued)

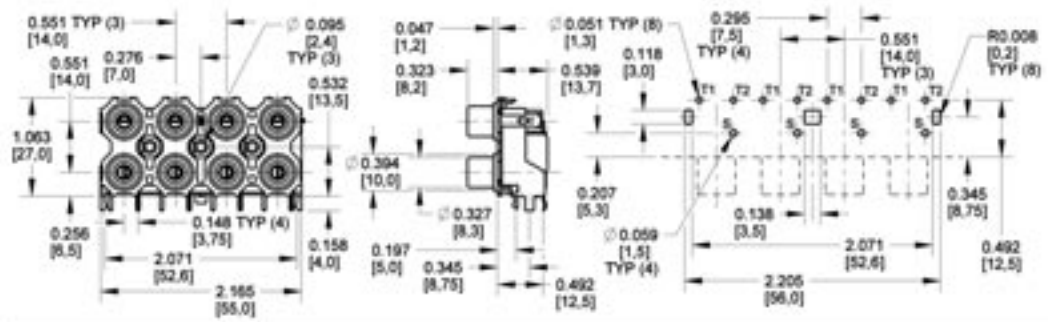

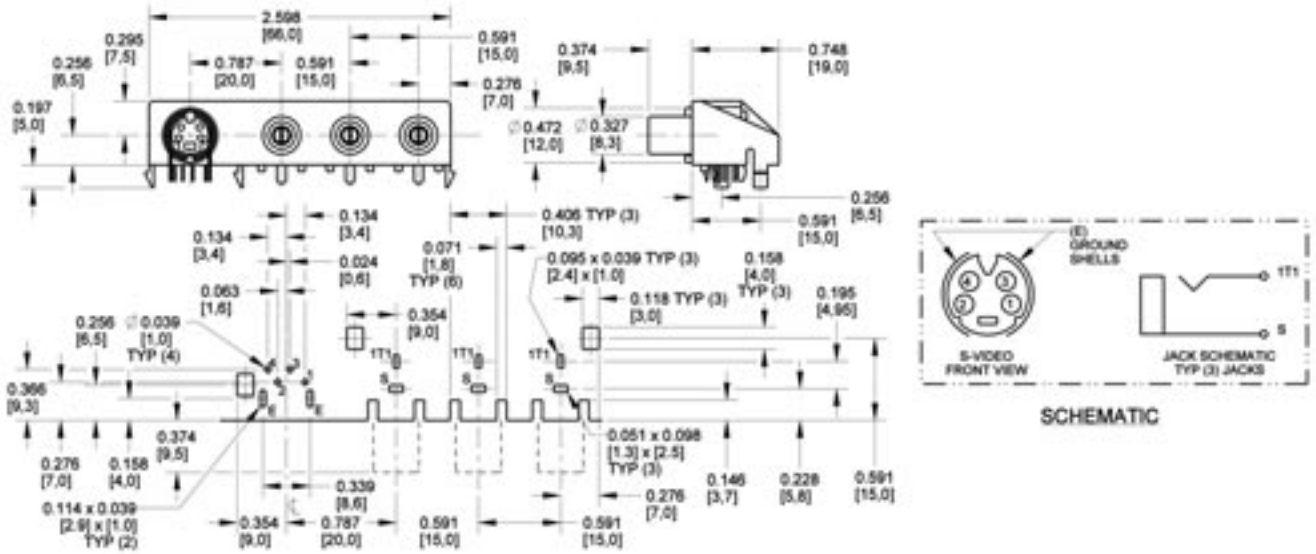

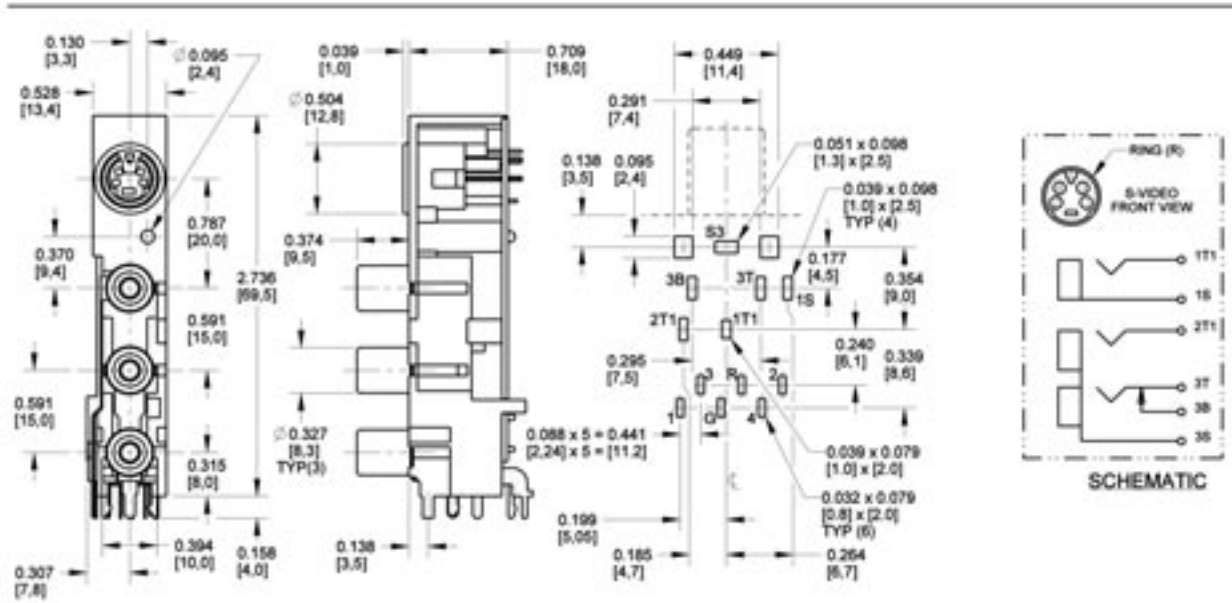

DIMENSIONS ARE FOR REFERENCE ONLY Inch (mm)

* Please visit the product pages on our website for the most up-to-date product information

RIGHT ANGLE MINIATURE POWER JACKS



RASM 712



RASM 722



RASM 732P


RAPC732OF


RAPC742


RASM752STR


RASM752TR

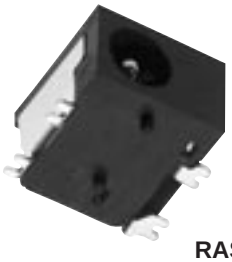
RASM742TR

SPECIFICATIONS:

Materials: Housing: Thermoplastic
Terminals:
RAPC700:
Sleeve: Silver plated copper alloy
Tip: Nickel plated, copper alloy
RAPC742, RASM742TR, RAPC732OF, RAPC742OF, RAPC752, RAPC752S, RASM752TR, RASM752STR:
Sleeve and tip: Silver plated tin
Shunt: Silver plated copper alloy
RASM700, RASH700:
Sleeve: Tin plated copper alloy
Tip: Nickel plated copper alloy)

ELECTRICAL

Current Rating: 3A
(RAPC700, RASH700, RASM700: 5A)
Contact Resistance: <50 mohms
Insulation Resistance: 100 mohms min.
(RAPC700, RASH700, RASM700: 30 megohms @100V DC)
Dielectric Withstanding Voltage: 250 VAC@ 1 minute

MECHANICAL:

Lifecycles: 5,000 min.

Part Number	Pin Size*	Description
RAPC712	0.100"/2.5mm	Right Angle, PC mount
RASH712	0.100"/2.5mm	Right Angle, hybrid mount
RASM712	0.100"/2.5mm	Right Angle, SMT mount
RAPC722	0.080"/2.0mm	Right Angle, PC mount
RASH722	0.080"/2.0mm	Right Angle, hybrid mount
RASM722	0.080"/2.0mm	Right Angle, SMT mount
RAPC732	0.050"/1.3mm	Right Angle, PC mount
RAPC732OF	0.050"/1.3mm	Right Angle, PC mount[1]
RASH732	0.050"/1.3mm	Right Angle, SMT mount
RASM732	0.050"/1.3mm	Right Angle, hybrid mount
RAPC742	0.040"/1.0mm	Right Angle, PC mount
RAPC742OF	0.040"/1.0mm	Right Angle, PC mount[1]
RASM742TR	0.040"/1.0mm	Right Angle, SMT mount[2]
RAPC752	0.025"/0.65mm	Right Angle, PC mount
RAPC752S	0.025"/0.65mm	Right Angle, PC mount[3]
RASM752TR	0.025"/0.65mm	Right Angle, SMT mount[2]
RASM752STR	0.025"/0.65mm	Right Angle, SMT mount[4]

Note: Contact factory for specific information on tape and reel options. *Pin Size (in/mm) 1. Open Frame 2. Tape and Reel. 3. Shielded 4. Tape and Reel, Shielded.
Note: Available with P locating post as an option.
Note: Available with tin-plating as a special order.
Note: Available with Hi-temp material, contact factory for details.

DIMENSIONS ARE FOR REFERENCE ONLY Inch (mm)

® Registered trademark of Switchcraft, Inc.
Note: Contact your Switchcraft Representative for price and delivery

* Please visit the product pages on our website for the most up-to-date product information

RIGHT ANGLE MINIATURE POWER JACKS (continued)

RAPC 712/722/732

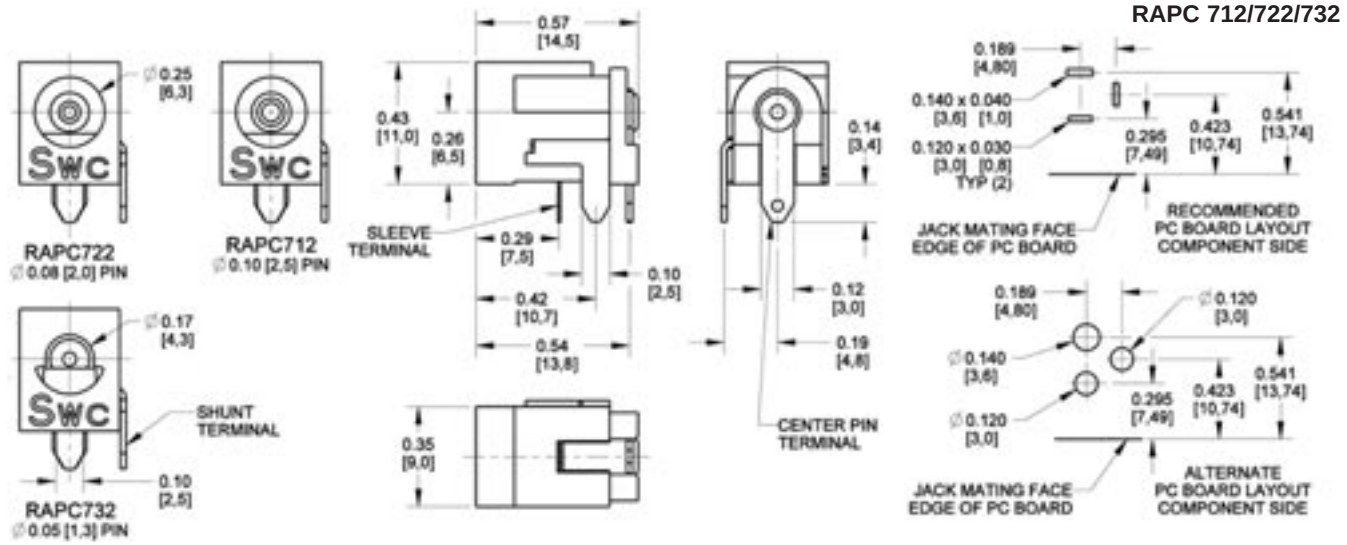

RASM 712/722/732

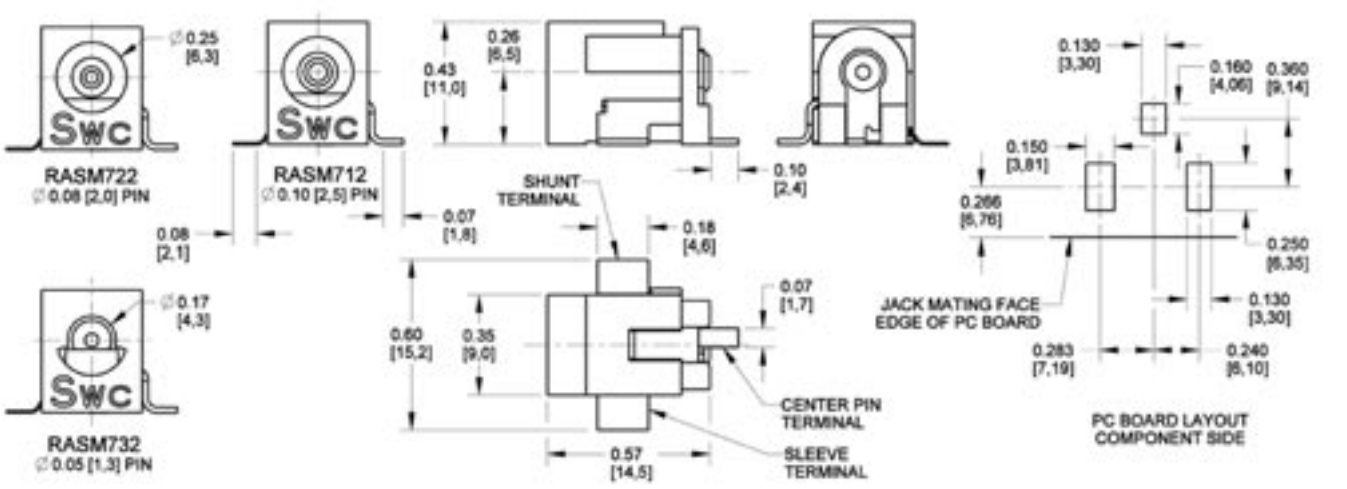

RASH 712/722/732

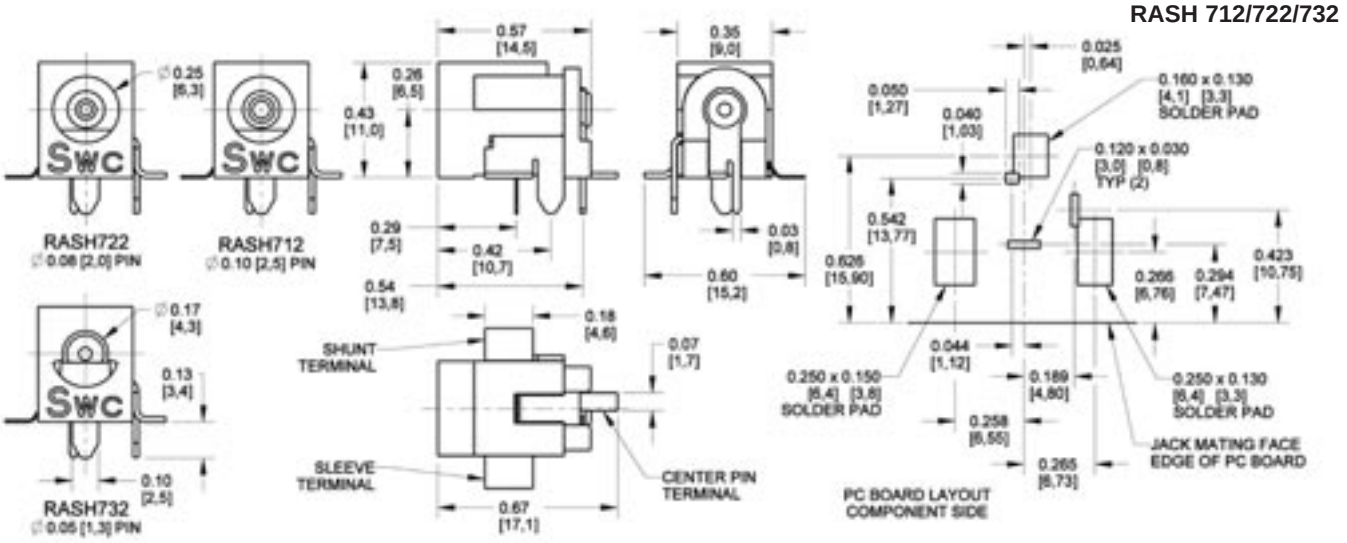

DIMENSIONS ARE FOR REFERENCE ONLY Inch (mm)

* Please visit the product pages on our website for the most up-to-date product information

RIGHT ANGLE MINIATURE POWER JACKS (continued)

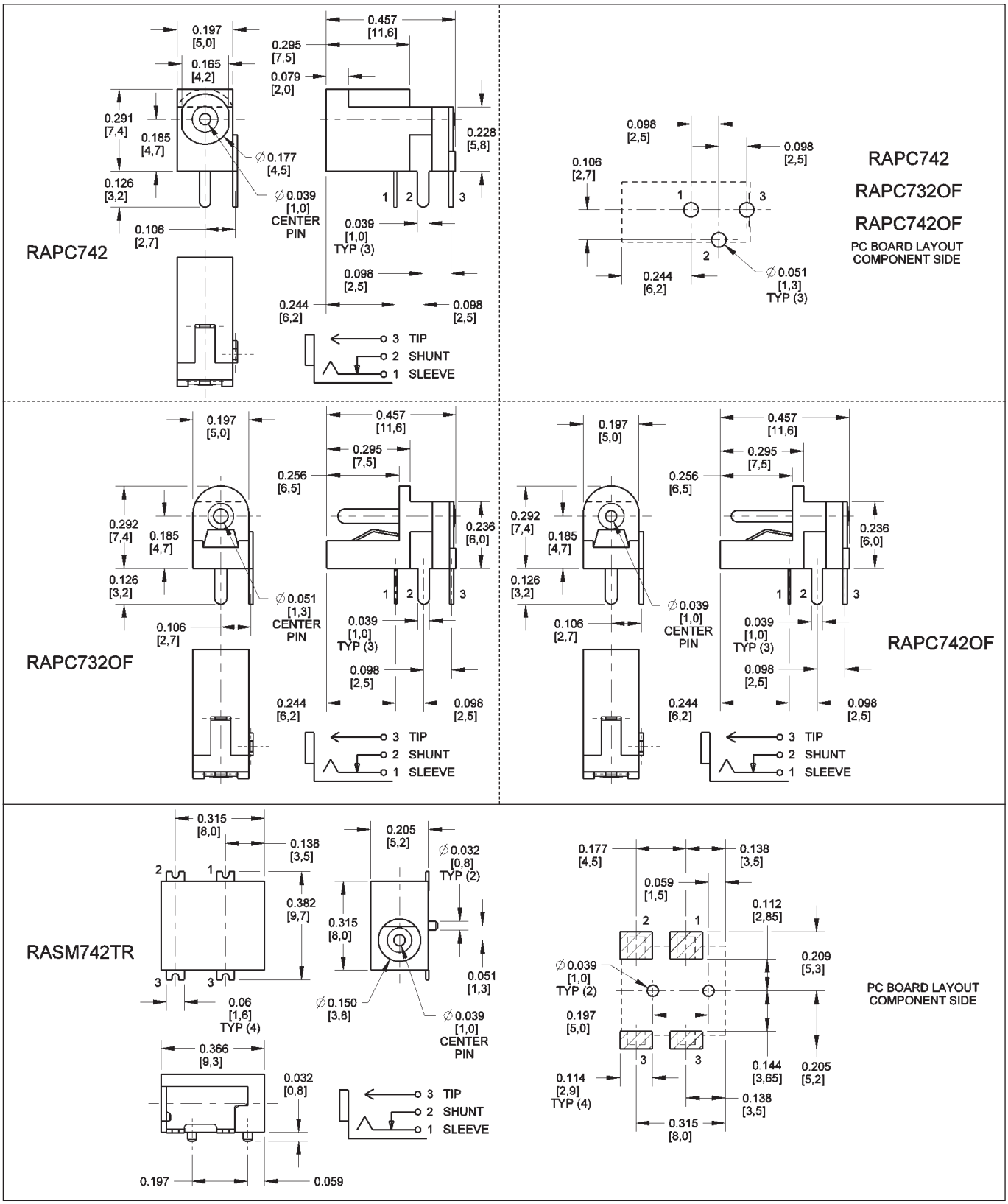

DIMENSIONS ARE FOR REFERENCE ONLY Inch (mm)

® Registered trademark of Switchcraft, Inc.
Note: Contact your Switchcraft Representative for price and delivery

* Please visit the product pages on our website for the most up-to-date product information

RIGHT ANGLE MINIATURE POWER JACKS (continued)

RAPC752

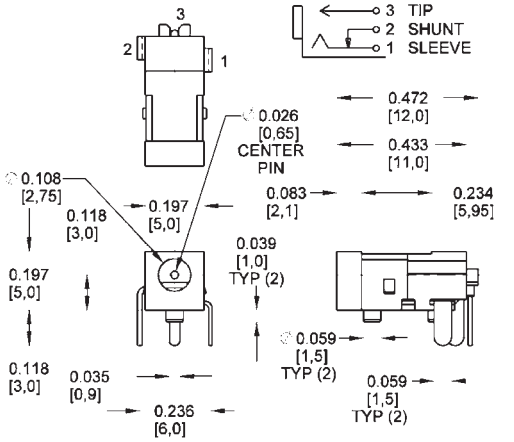

PC BOARD LAYOUT
COMPONENT SIDE

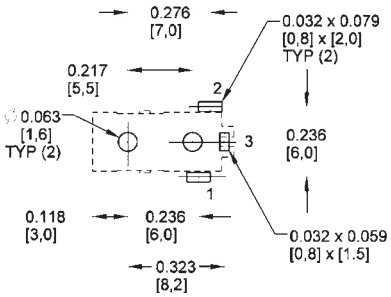

RASM752TR

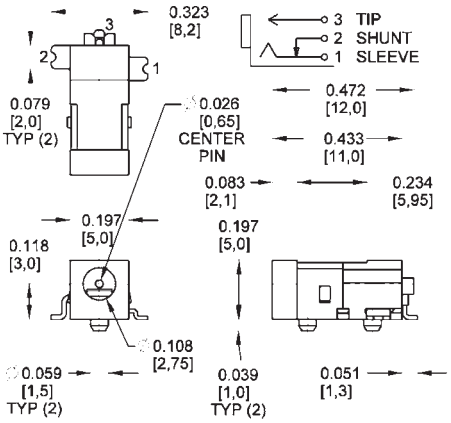

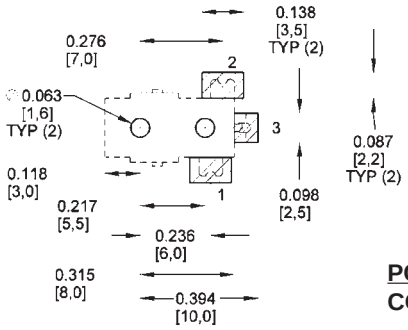

PC BOARD LAYOUT
COMPONENT SIDE

RAPC752S

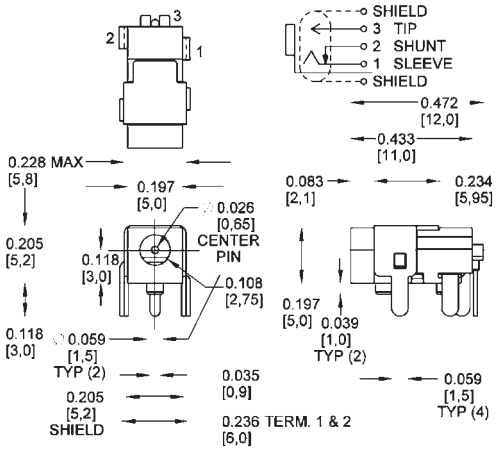

PC BOARD LAYOUT
COMPONENT SIDE

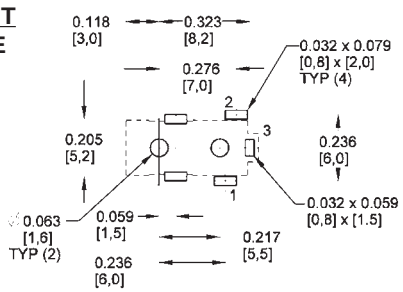

RASM752STR

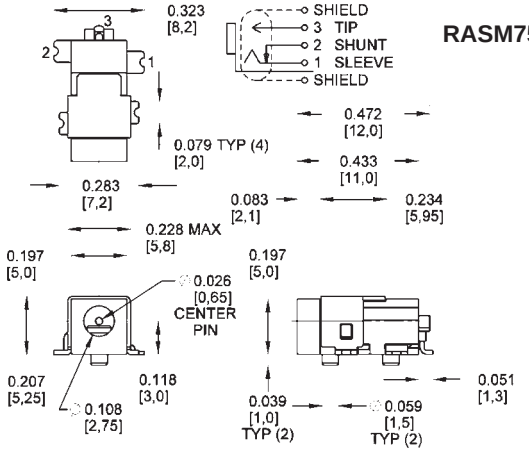

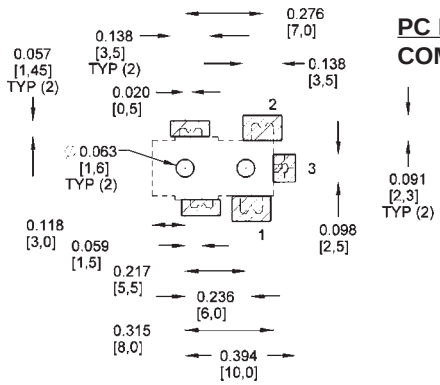

PC BOARD LAYOUT
COMPONENT SIDE

DIMENSIONS ARE FOR REFERENCE ONLY Inch (mm)

* Please visit the product pages on our website for the most up-to-date product information

STRAIGHT MINIATURE POWER JACKS



712A



PC712A



L722A



2C1072



L712RA

FEATURES:

- Automatic switch over from AC to DC permitted by sleeve shunt spring.
- Split center pin shaped to hold mating plug firmly.
- Bushing length available as 0.219" or extended 0.319" to permit use in thicker panels.
- Non-turn mounting possible using standard "D" shape bushing.
- Insulated mounting hardware available.
- Right angle versions offer "kinked" PC terminals for added board retention.

MATERIALS:

Housing: Thermoplastic
Bushing: Plated copper alloy
Terminals: Plated copper alloy
Insulators: Rigid Plastic
Hardware: Supplied with one P2439 nickel plated copper alloy hex nut, and one P2441 nickel plated steel flat washer

ELECTRICAL:

Current Rating: 5A, 12V DC resistive
Contact Resistance: 0.01 Ohms max. (initial), 0.02 Ohms max. (after humidity, durability exposure), 0.10 Ohms max. (after salt spray)
Insulation Resistance: 10,000 Mohms min. (initial), 1,000 Mohms min. (after humidity, durability exposure)
Dielectric Withstanding Voltage: 500 VAC max.

MECHANICAL:

Lifecycles: 10,000 cycles min.

Part Number	Pin Size*	Description	Typical Mating Plug
712A	0.100"/2.5mm	Solder lugs	760
712RA	0.100"/2.5mm	Right angle PC terminals	760
L712A	0.100"/2.5mm	Solder lugs, long bushing	761K
L712RA	0.100"/2.5mm	Right angle PC terminals, long bushing	761K
PC712A	0.100"/2.5mm	Straight PC terminals	760
PCL712A	0.100"/2.5mm	Straight PC terminals, long bushing	761K
722A	0.080"/2.0mm	Solder lugs	S760
722RA	0.080"/2.0mm	Right angle PC terminals, long bushing	S760
L722A	0.080"/2.0mm	Solder lugs, long bushing	S761K
L722RA	0.080"/2.0mm	Right angle PC terminals, long bushing	S761K
PC722A	0.080"/2.0mm	Straight PC terminals	S760
PCL722A	0.080"/2.0mm	Straight PC terminals, long bushing	S761K
732A	0.050"/1.3mm	Solder lugs	860
732RA	0.050"/1.3mm	Right angle PC terminals	860
PC732A	0.050"/1.3mm	Straight PC terminals	860
2C1072		Jack covers for 712A and 722A	

Note: For insulated mounting order **P2442** phenolic flat washer and **S4263** swedged fiber washer.

DIMENSIONS ARE FOR REFERENCE ONLY Inch (mm)

® Registered trademark of Switchcraft, Inc.
Note: Contact your Switchcraft Representative for price and delivery

* Please visit the product pages on our website for the most up-to-date product information

STRAIGHT MINIATURE POWER JACKS (continued)

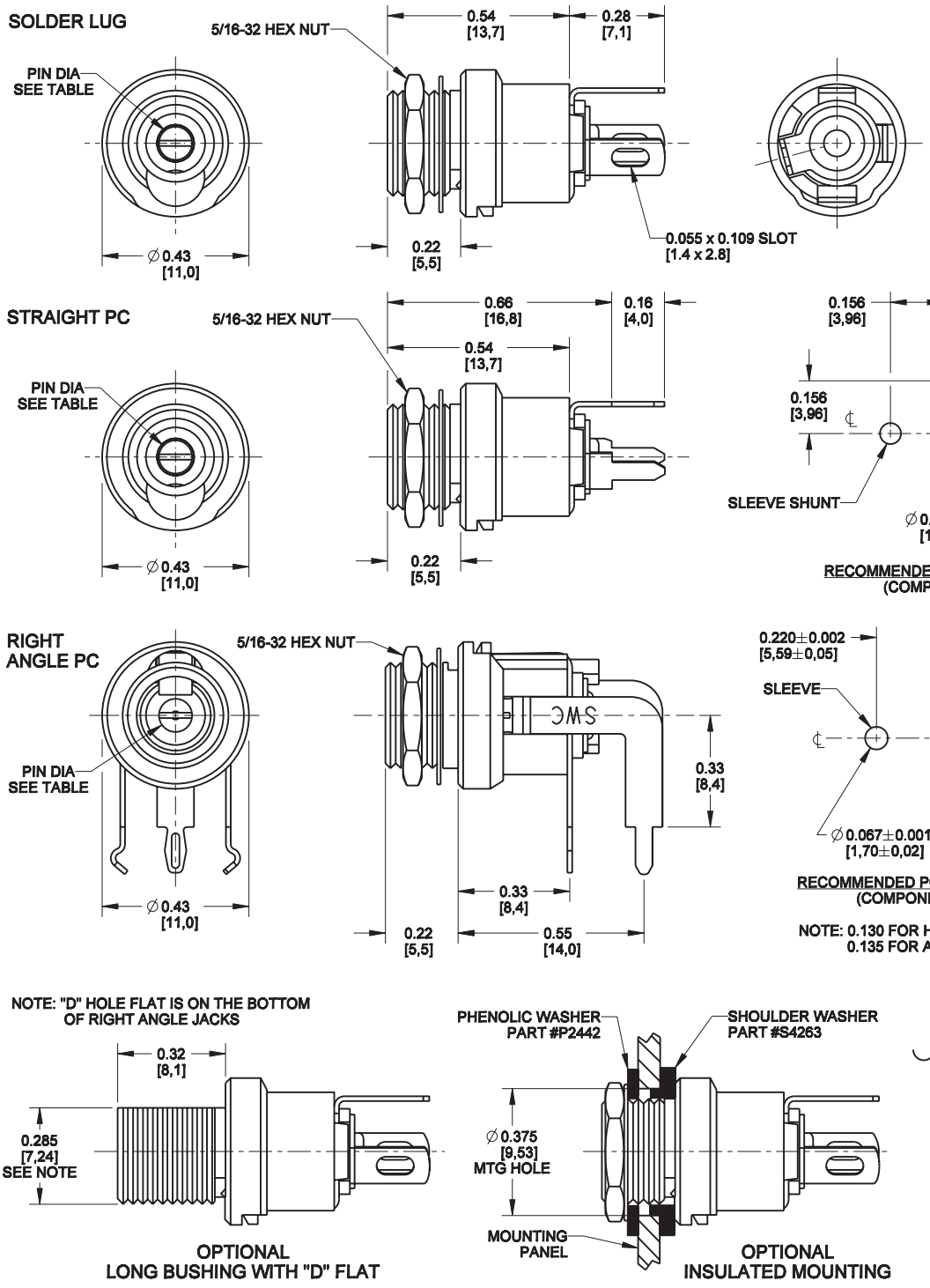

DIMENSIONS ARE FOR REFERENCE ONLY Inch (mm)

* Please visit the product pages on our website for the most up-to-date product information

VJ SERIES

See page 193 for Patch panel information.



VJHD*75TX

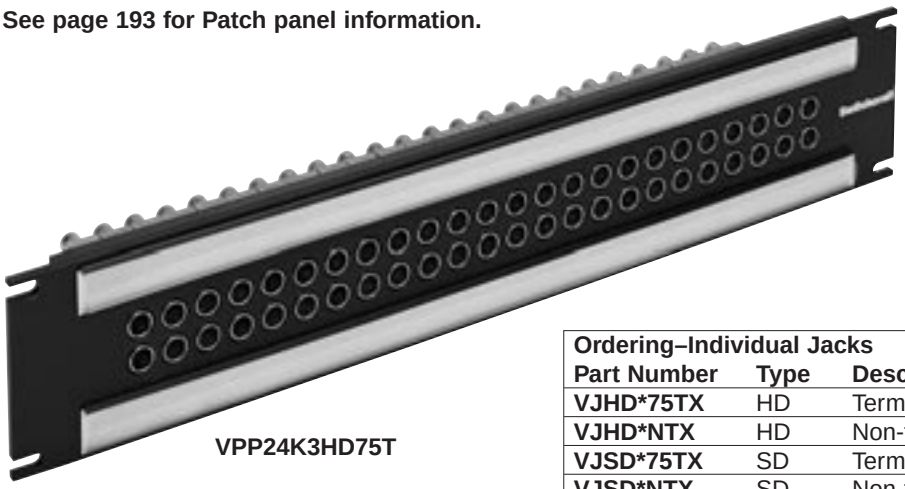

VPP24K3HD75T

Ordering–Individual Jacks		
Part Number	**Type**	**Description**
VJHD*75TX	HD	Terminated
VJHD*NTX	HD	Non-terminated
VJSD*75TX	SD	Terminated
VJSD*NTX	SD	Non-terminated
*Add “N” for non-normalled version		

FEATURES AND BENEFITS

- HD Series meets SMPTE 292M Specifications
- SD Series has a bandwidth from DC to 1.75GHz
- Jacks feature rugged heavy duty housings

SMITH CHART (TYPICAL)

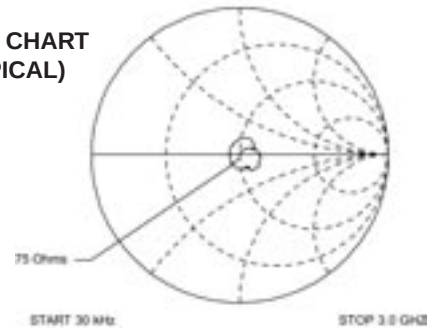

VIDEO JACK SPECIFICATIONS

ELECTRICAL

Rated Bandwidth: 2.4 GHz (HD), 1.75 GHz (SD)
Characteristic Impedance: 75 ohms
Return Loss: Better than –15 dB
Insertion Loss: Better than –.5 dB
Contact Resistance: Less than 20 milliohms
Termination Resistance: 75 W, ±1%
Center Conductor: Accepts .090 pin diameter

MECHANICAL

Mechanical Shock: Per MIL-STD-202, Method 213, Test condition I
Vibration: Per MIL-STD-202, Method 201
Insertion Force: 12 lbs. maximum
Withdrawal Force: 3 lbs. minimum
Life Cycle: 30,000

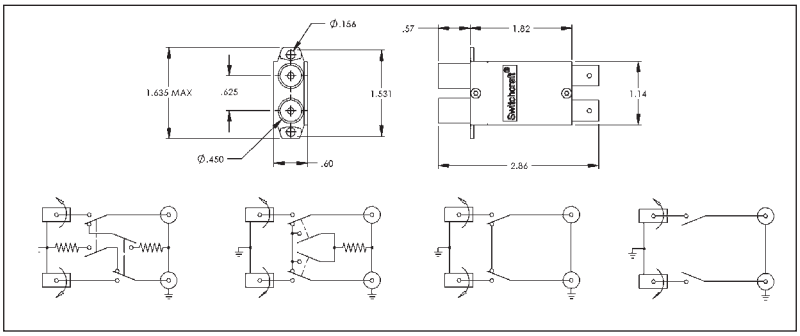

NON-NORMALLED TERMINATED | **NORMALLED TERMINATED** | **NORMALLED NON-TERMINATED** | **NON-NORMALLED NON-TERMINATED**

MATERIAL

Housing: Zinc alloy, nickel plated
Center Contacts: Copper alloy, gold plated
Switching Springs: Copper alloy, gold plated
Grounding Contacts:
HD Series - Copper alloy, gold plated
SD Series - Copper alloy, nickel plated
Insulators: Thermoplastic, UL 94V-0 rated

ENVIRONMENTAL

Operating Temperature: – 40ºC to 65ºC
Storage Temperature: – 55ºC to 85ºC
Thermal Shock: Per MIL-STD-202, Method 107
Moisture and Humidity:
Per MIL-STD-202, Method 106.
The HD Series meets SMPTE 292M specifications for high definition video signaling, covering a bandwidth range from DC to 2.4GHz. The SD Series is perfect for serial digital, with a bandwidth from DC to 1.75GHZ.

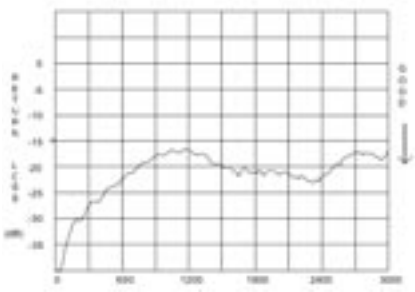

FREQUENCY (MHz)

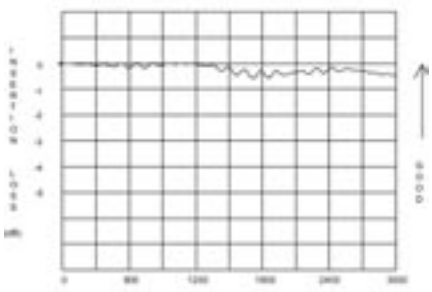

FREQUENCY (MHz)

DIMENSIONS ARE FOR REFERENCE ONLY Inch / (mm)

® Registered trademark of Switchcraft, Inc.
Note: Contact your Switchcraft Representative for price and delivery

* Please visit the product pages on our website for the most up-to-date product information

MVJ SERIES

See page 196 for Patch panel information.

MVJ*75T

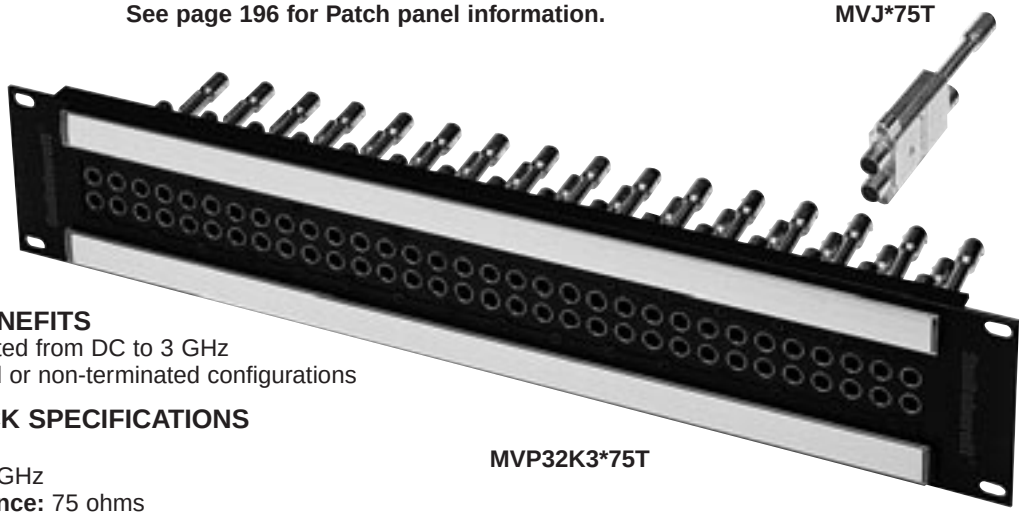

MVP32K3*75T

FEATURES AND BENEFITS

- Midsize video jacks rated from DC to 3 GHz
- Available in terminated or non-terminated configurations

MIDSIZE VIDEO JACK SPECIFICATIONS

ELECTRICAL

Rated Bandwidth: 3.0 GHz
Characteristic Impedance: 75 ohms
Return Loss: See Typical Return Loss Chart
Insertion Loss: See Typical Insertion Loss Chart
Contact Resistance: Less than 20 milliohms
Termination Resistance: 75 W, ±1%
Center Conductor: Accepts .048 pin diameter

MECHANICAL

Mechanical Shock: Per MIL-STD-202, Method 213, Test condition I
Vibration: Per MIL-STD-202, Method 201
Insertion Force: 12 lbs. maximum
Withdrawal Force: 3 lbs. minimum
Life Cycle: 30,000

MATERIAL

Housing: Zinc alloy, nickel plated
Center Contacts: Copper alloy, gold plated
Switching Springs: Copper alloy, gold plated
Grounding Contacts: Copper alloy, gold plated
BNC Insulators: Teflon
Actuators: Thermoplastic, UL94V-0 rated

ENVIRONMENTAL

Operating Temperature: – 40ºC to 65ºC
Storage Temperature: – 55ºC to 85ºC
Thermal Shock: Per MIL-STD-202, Method 107
Moisture and Humidity: Per MIL-STD-202, Method 106

Ordering Information

Part Number	Jack	Description
MVJ*75T	HD	Terminated
MVJ*NT	HD	Non-terminated

*Add “N” for non-normalled version

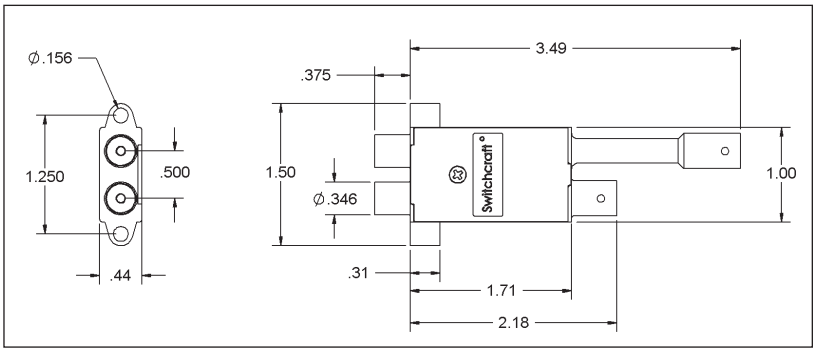

SMITH CHART (TYPICAL)

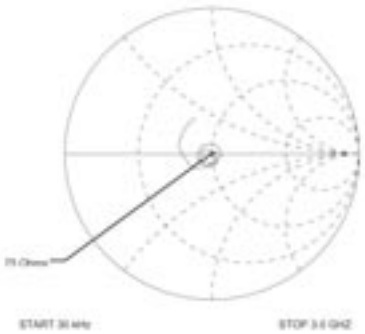

RETURN LOSS (TYPICAL)

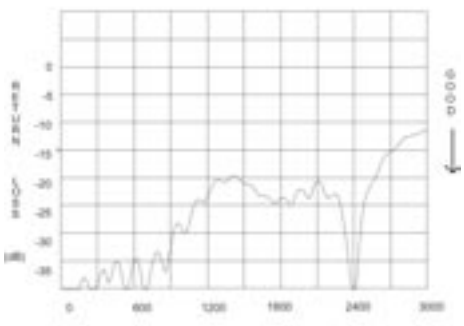

FREQUENCY (MHz)

RETURN LOSS (TYPICAL)

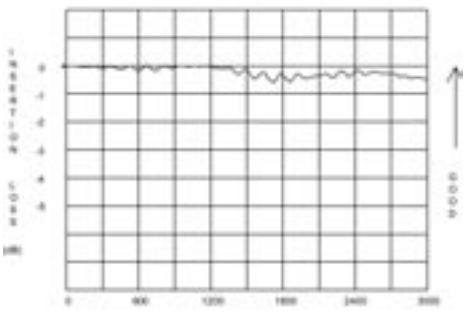

FREQUENCY (MHz)

DIMENSIONS ARE FOR REFERENCE ONLY Inch (mm)

* Please visit the product pages on our website for the most up-to-date product information

MIL-TYPE 1/4" PHONE PLUGS

2-CONDUCTOR



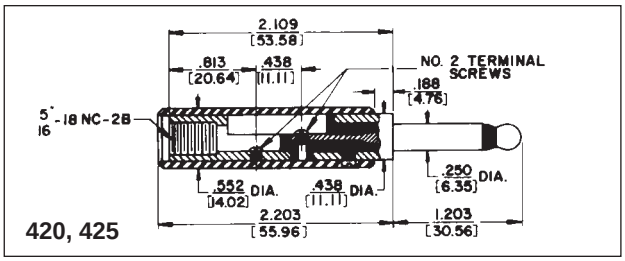

3-CONDUCTOR



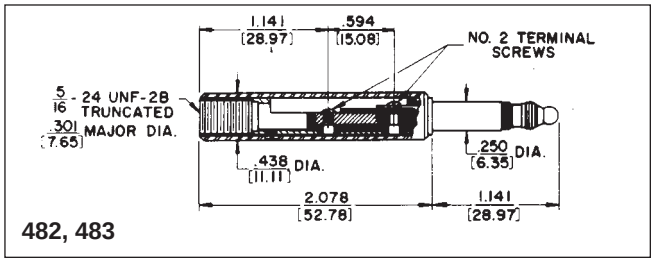



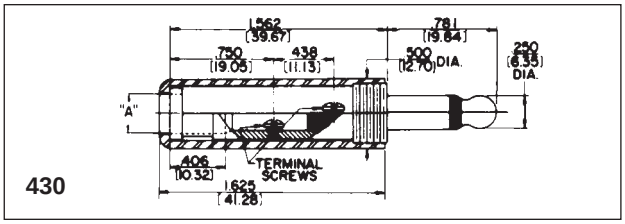



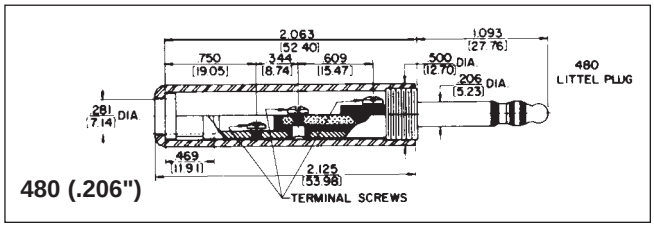



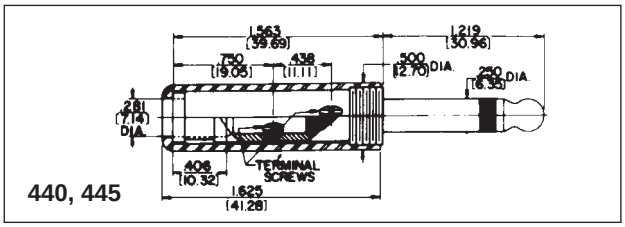



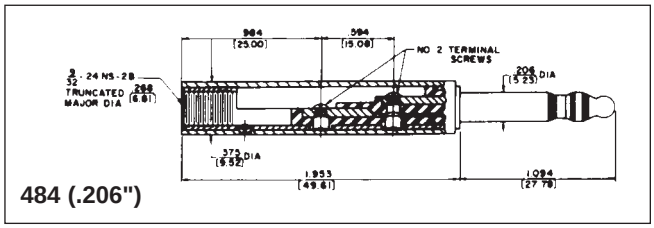

FEATURES

Designed for high quality communication equipment to meet military requirements, This series features one-piece tip rod and one-piece sleeve and plug body, assembled together into a mode as inserts, providing a finished plug with complete continuity of thermoplastic insulation between top rod and plug sleeve. Internal (invisible externally) interlock mechanically engages the metal and plastic components providing a realistic lock to prevent parts shifting. Design and material in accordance with MIL-P-642(A), MIL part number molded or stamped on handle, manufacturer's trademark (as required by MIL specification) appears on plug body.

SPECIFICATIONS

Tip Rod, Body and Screws: Copper alloy, natural finish.

Terminals: Tinned copper alloy.

Insulation: Thermoplastic, per MIL-P-22985, Type II, Class 1.

Handles: Thermoplastic, Type 6, per MIL-M-20693, Type II. Shielded; machined from copper alloy, nickel-plated.

STRAIN RELIEF CLAMP

For MIL-type Littel-Plug phone plugs. **P2380** conforms to Specification SC-A-7674-F - supplied with Plug Numbers 430, 440, 445 and 470. **P2381** meets Specification MS-35762 - supplied with Plug Number 480 and Extension-Jax® phone jack, Number 820.

DIMENSIONS ARE FOR REFERENCE ONLY Inch (mm)

® Registered trademark of Switchcraft, Inc.
Note: Contact your Switchcraft Representative for price and delivery

* Please visit the product pages on our website for the most up-to-date product information

LITTEL PLUG® PHONE PLUGS

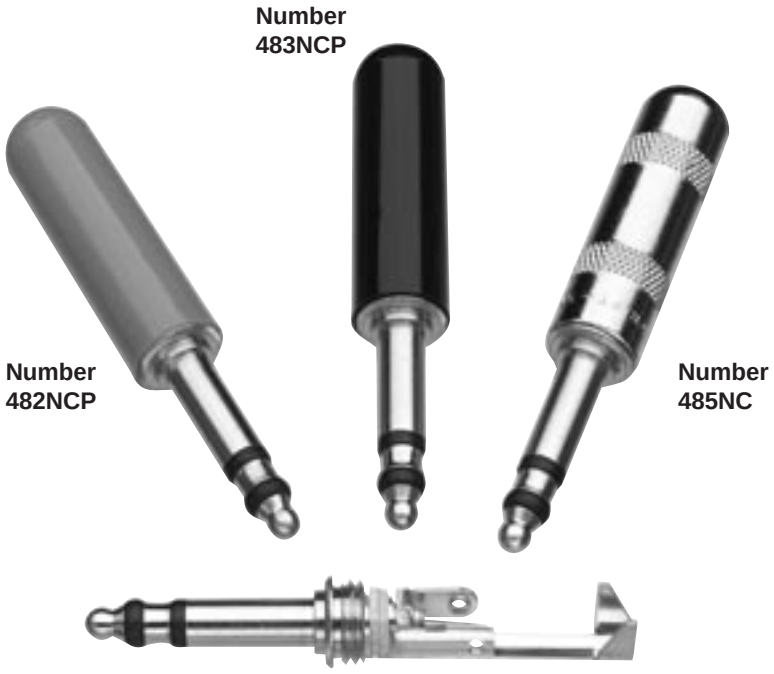

FEATURES AND BENEFITS

- 3 conductor plug
- Designed for high quality communication equipment
- One-piece tip rod ensures electrical continuity
- Brass plug finger versions meet MIL specifications
- 'N' and 'NC' suffix versions have nickel-plated plug fingers, excellent for audio applications
- 'NC" suffix option has rugged, heavy duty cable clamp, solder terminals for easier solderability and assembly. Metal shielded handle
- 'NCP" - plastic handle

SPECIFICATIONS

Plug Finger: Brass, natural finish or nickel-plated
Terminals: Brass, electro-tinned
Insulation: Ethyl cellulose, per MIL-P-22835, Type II, Class 1, or acetal resin
Handles: Plastic-nylon molding plastic, Type 6, per MIL-M-20693, Type II. Shielded metal handle with red, black or nickel finish

ORDERING INFORMATION

1. Order by part number.
2. Contact Switchcraft for more information.
3. Mating jacks available.

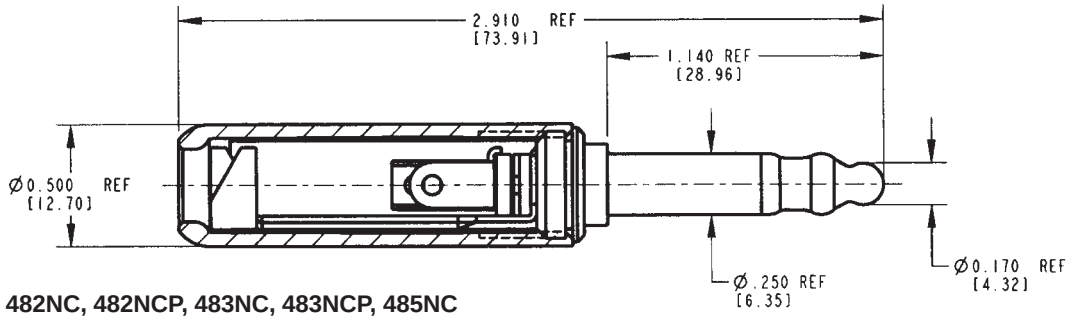

PART NO. 482NC, 482NCP, 483NC, 483NCP, 485NC

DIMENSIONS ARE FOR REFERENCE ONLY Inch (mm)

* Please visit the product pages on our website for the most up-to-date product information

LITTEL PLUG® PHONE PLUGS

Part Number	Conductors	Terminals	Handle	MIL Part Number	Notes
482N	3	Screw	Red	None	Plastic handle, nickel plated plug finger
482NC	3	Cable Clamp	Shielded	None	Red metal handle, nickel plated plug finger
482NCP	3	Cable Clamp	Red	None	Plastic handle,nickel plated plug finger
483N	3	Screw	Black	None	Plastic handle, nickel plated plug finger
483NC	3	Cable Clamp	Shielded	None	Black metal handle,nickel plate plug finger
483NCP	3	Cable Clamp	Black	None	Black plastic handle, nickel plated plug finger
485NC	3	Cable Clamp	Shielded	None	Nickel plated handle,nickel plated plug finger

480 SERIES PART NUMBERING CHART

Part number	206" dia. finger	1/4" dia. finger	Brass finger	Nickel finger	Handle Material	Red handle	Black handle	Nickel handle	Standard cable clamp	Large cable clamp
480	•		•		Plastic		•		•	
482		•	•		Plastic	•			•	
482N		•		•	Plastic	•			•	
482NC		•		•	Metal	•				•
482NCP		•		•	Plastic	•				•
483		•	•		Plastic		•		•	
483N		•		•	Plastic		•		•	
483NC		•		•	Metal		•			•
483NCP		•		•	Plastic		•			•
484	•		•		Plastic	•			•	
485NC		•		•	Metal			•		•

DIMENSIONS ARE FOR REFERENCE ONLY Inch (mm)

® Registered trademark of Switchcraft, Inc.
Note: Contact your Switchcraft Representative for price and delivery

* Please visit the product pages on our website for the most up-to-date product information

MIL-TYPE 1/4" TWIN PHONE PLUGS

Number 411

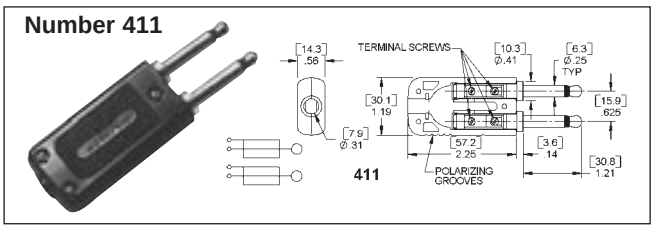

Number 414

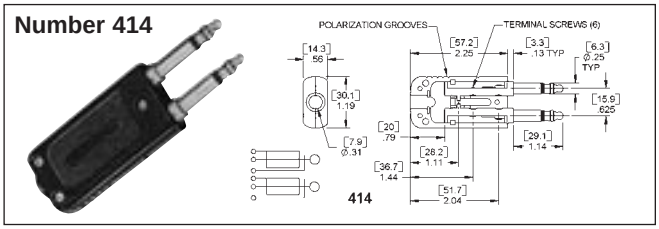

Number 412

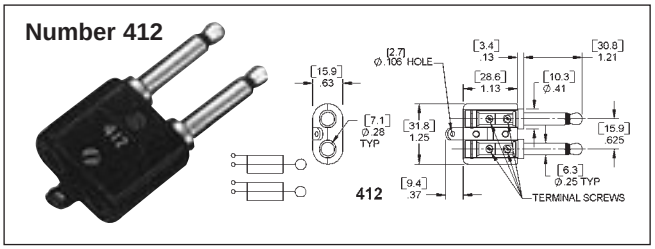

Number 415

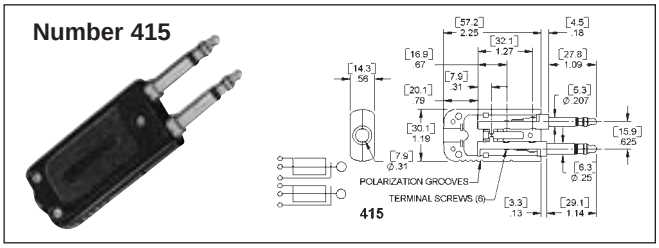

FEATURES

Design and material strictly in accordance with Specification MIL-P-642(A), MIL part number molded or stamped on handle, manufacturer's trademark (as required in MIL Specification) appears on plug body. Ideal for use in broadcast and recording studios, military, industrial and telephone switchboard applications, instrumentation and telemetry.

Individual plugs, featuring one-piece tip rod and one-piece sleeve and plug body, with complete continuity of thermoplastic insulation between plug elements, are placed into handles to provide a double Twin-Plug® plug (two electrically-independent 2-conductor plugs spaced .625" center-to-center, with self-alignment feature). 411, 414 and 415 Twin-Plug plugs have provision for use of Cord Clamp **Number S2674**. 412 Twin-Plug has external Cord Anchor.

6-conductor Twin-Plug, 414 and 415, provide two electrically-independent 3-conductor plug fingers spaced on .625" centers. Fingers are insulated from each other and each provides tip, ring and sleeve connections. Black plastic handle is notched to indicate polarity. Accepts standard 6-conductor cables. Handle has provision for use of Cord Clamp, **S2674**.

Fingers of 414 are .25" diameter and mate with Switchcraft type MT389 Twin-Jax®, MT333B, MT336 MT-Jax®, and other jacks having .25" inside diameter sleeves and mounted on .625" centers. 415 has a .25" diameter finger and a .206" diameter finger to provide automatic polarization. Fingers mate with Switchcraft MT332B and MT342B MT-Jax, respectively.

STRAIN RELIEF CLAMP

Natural brass. For use only with 411, 414, 415 Twin-Plug, **S2674**.

SPECIFICATIONS

Tip, Rod, Ring Sleeve, Body, Screws: Copper alloy, natural finish. Number 412 Handle Screws - iridescent iridite overplating.

Terminals: Tinned copper alloy. (Latest MIL Specifications no longer specify terminals; terminal furnished is the type referenced as TM-89).

Insulation: Thermoplastic; per MIL-P-22985, Type II, Class 1.

Handle: Thermoplastic on 411, 412, 414 and 415, per MIL-P-22985, Type II, Class 4. Molded black thermoset plastic per MIL-M-14F.

Part No.	Conductors	Terminals	"Typical Mating Jack1"	Mil No.	Notes
411	2	Screw	MT388	M642/9-1	Provision for internal cord clamp (not included)
412	2	Screw	MT388	---	MILPJ289. Similar to WECo289B
414	3	Screw	MT389	---	6-circuit plug, 2 electrically-independent 3 conductor fingers, .25" fingers. Provision for internal cord clamp (not included) Similar to WECo 338A. 425A-3
415	3	Screw	MT332B &1, MT342B	---	6-circuit plug, 2 electrically-independent 3 conductor fingers, one .25" finger, one .206" finger. Provision for internal cord clamp (not included)

1. Switchcraft Part Numbers. See Jacks Section for other mating jacks.

DIMENSIONS ARE FOR REFERENCE ONLY Inch (mm)

* Please visit the product pages on our website for the most up-to-date product information

MIL-TYPE 1/4" EXTENSION JACKS

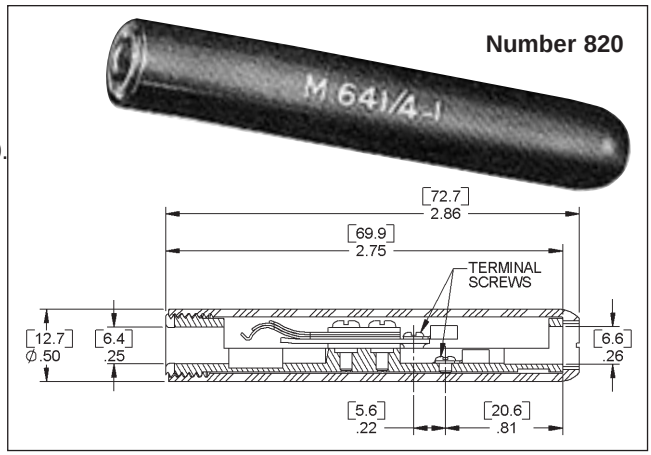

FEATURES

Cable jack meets requirements of Specification MIL-J-641(A), Type Number JJ-026. Mates only with MIL-type plugs PJ-054 and PJ-540. Switchcraft 430.

SPECIFICATIONS

Body and Terminal Screws: Copper alloy, natural finish.
Springs: Punched from special copper alloy.
Stack Insulation: Rigid plastic spacers Rigid plastic tubing.
Handle: Same as plug handle above.
Stack Screws: Stainless steel.

Part Number	Conductors	Terminals	Typical Mating Plug[1]	Handle	Handle Part Number	MIL Part Number
820	2	Screw[2, 3]	430	Black	M1015	M641/4-1

1. Switchcraft Part Number See Jacks Section for mating jacks. 2. Switchcraft replacement screw. **P1070**, Terminal **P1069** (2 each required)
3. See previous page for strain relief clamp.

TELEPHONE PATCH ADAPTERS

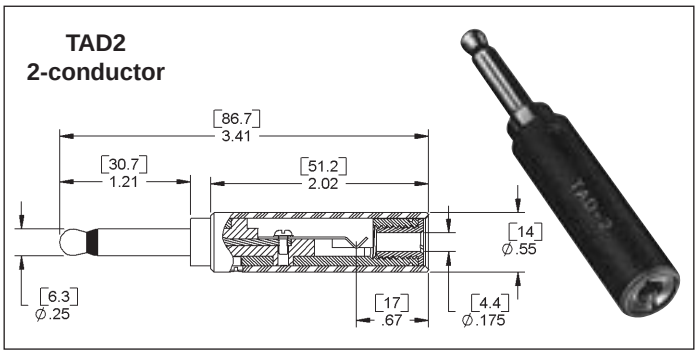

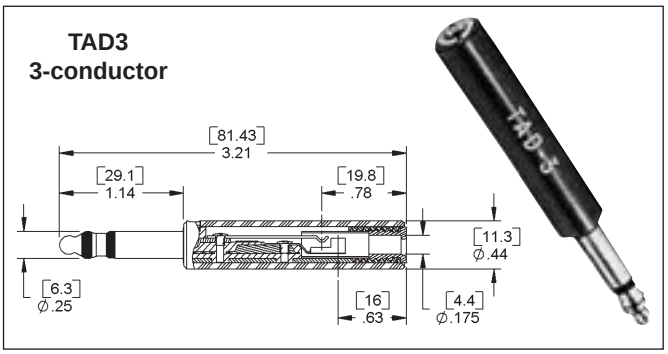

FEATURES

Compact patch adapters convert standard full-size phone jacks to standard miniature phone jack connections with maximum convenience and reliability at a minimum cost. Eliminates cross-patching problems and need for combination patch cords with standard phone plug on one end and a miniature phone plug on the other. Adapters are 100% compatible with Switchcraft® telephone type and military phone jacks and miniaturized tini-telephone patching system components, as well as equivalent industry standard phone plugs.

TAD2 – 2-conductor adapter. Plug finger meets specifications for MIL plug PJ-047 (MIL-P-642). Fits Switchcraft T-Jax®, M-Jax®, MIL-approved MT-Jax®, and other industry-standard phone jacks with .250" inside diameter sleeves. The .552" diameter handle accommodates jacks on .625" centers. For quick identification, TAD-2 is stamped on the blue handle - will not wear off with constant use. Miniature 2-conductor jack built into plug body, accepts miniature phone plugs with .173" diameter fingers, such as Switchcraft tini-telephone® plugs, Series TT200 and TT250, and other standard miniature telephone plugs. TAD3 is a 3-conductor version of TAD2. Finger configuration meets requirements of PJ-051 (MIL-P-642). Finger incorporates dead ring to minimize plug and jack wear. Blue handle has diameter of .444".

SPECIFICATIONS

Tip Rod, Ring, Sleeve Body and Screws: Copper alloy, natural finish.
Insulation: Injection-molded plastic.
Jack Springs: Formed copper alloy.
Screw, Spring Retaining:
TAD2 - #2-64, steel. Part Number **P1616** (one required).
TAD3 - #2-64, brass. Part Number **P1070** (two required).
Ring Insulations (TAD3 only): Kraft paper sleeve.
Handle: Molded blue thermoplastic with die-stamped identification legend. TAD2 Handle, (Part Number **M1487**), and Retaining Screw, (Part Number **T1677**), one required. TAD3 Handle, (Part Number **M1488**), and Retaining Screw, (Part Number **T1990**), one required.

DIMENSIONS ARE FOR REFERENCE ONLY Inch (mm)

® Registered trademark of Switchcraft, Inc.
Note: Contact your Switchcraft Representative for price and delivery

* Please visit the product pages on our website for the most up-to-date product information

MINIATURE TELEPHONE PLUGS



TT251 and TT252



TT253 and TT254

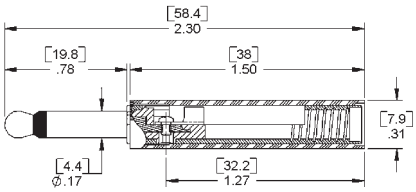

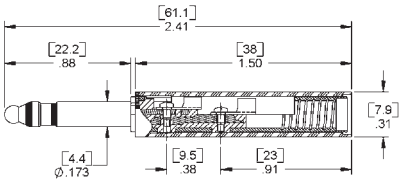

TT253NC

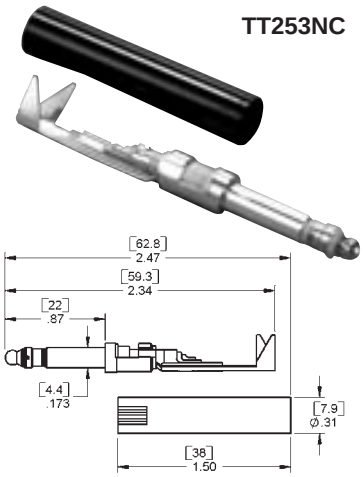

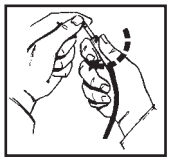

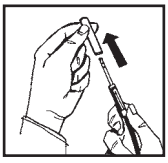

Removing handle from plug body can be easily accomplished by lightly squeezing the knurled area of the handle and twisting 30° counter-clockwise.

.173" MINIATURE PHONE PLUGS FEATURES

2- and 3-conductor miniature non-shorting telephone plugs designed for use with TT-Jax®, Unijax®, and other phone jacks with a .176" inside diameter bushing. Approximately 1/2 the size of standard phone plugs, yet retains the uniformity, dependability and quality of MIL-type phone plugs.

TT-Plug® Miniature Telephone Plugs are the first to offer 2- and 3-conductors in an attachable type with twist handles for quick assembly. Series TT250 phone plug is available with red or black handles. Other color handles available on special order. Also available with nickel-plated plug fingers. (Add “N” to part number: 253N, 254N).

The TT253NC and TT254NC offer the same nickel-plated plug fingers as the ‘N’ versions, but also includes cable clamps and solder terminals for easy assembly.

Plugs feature a one-piece tip rod, ring and a one-piece sleeve with integral plug body, assembled together into a mold as inserts. Providing complete continuity of thermoplastic insulation between tip rod, ring and sleeve. Internal interlock of all parts prevents shifting and shorting under extreme rugged usage.

Internal 12-24 threads in end of plug body are intended for threading over outer jacket of a patch cord to provide a superior cable anchor.

Patch cords such as Switchcraft Series TT700 (or other .216" diameter cable) are easily attached to Series TT250 by screw terminals.

FEATURES AND BENEFITS

- Designed for pro audio applications
- 3 Conductor
- .173" (4.40mm) plug finger diameter
- One-piece tip rod ensures high reliability
- Complete continuity of thermoplastic insulation between conductors
- Internal keying of all parts preventing shifting and shorting
- Solder terminals for easier termination and assembly
- Large cable clamp for shield termination and strain relief
- Black or red handles

SPECIFICATIONS

Tip Rod, Ring, Sleeve and Body: Copper alloy, natural finish.

Terminals and Terminal Screws: Copper alloy, natural finish.

Insulation: Thermoplastic. **Handle:** Molded plastic

Part Number	Conductors	Terminals	Handle Color	Handle Part Number	Description
TT251	2	Screw	Black	T2302	
TT252	2	Screw	Red	T2315	
TT253	3	Screw	Black	T2307	Mil-type M642/13-1
TT253N	3	Screw	Black	T2324	Nickel-plated plug
TT253NC	3	Solder	Black	T2324	Nickel-plated plug, tinned solder terminals
TT254	3	Screw	Red	T2301	Mil-type M642/13-2
TT254N	3	Screw	Red	T2325	Nickel-plated plug
TT254NC	3	Solder	Red	T2325	Nickel-plated plug, tinned solder terminals
2P2003	3	Screw	None	None	

DIMENSIONS ARE FOR REFERENCE ONLY Inch (mm)

* Please visit the product pages on our website for the most up-to-date product information

.173" MINIATURE TELEPHONE PLUGS BANTAM TYPE

FEATURES

Miniature telephone twin plugs with two 2-conductor or two 3-conductor fingers, designed to mate with TT Twin-Jax®, TT-Jax®, and other phone jacks with a .176" inside diameter bushing and compatible tip and ring springs. Approximately 1/2 the size of standard phone plugs; yet retains uniformity, dependability of high-quality phone plugs. The phone plugs are exceptionally light, small and rugged. Plug fingers can easily be removed and replaced.

- Minimum Space: Plugs fit .313" centers, horizontally or vertically.
- Self-Aligning: Plug fingers compensate for minor variations in jack spacing.
- Polarizing: Handle notches identify location of each finger.
- Tip Monitoring: Handle ports permit probe insertion to monitor tip circuits.
- Terminating and Looping Plugs: OEMs can fabricate cross-wired plugs, i.e., tip-to-sleeve, tip-to-ring, etc., according to individual requirements. OEMs can also wire-in resistors, RCL networks, etc. for standard and special terminating applications. Switchcraft will build looping and terminating TT-Twin Plugs on special order, where quantities warrant.
- Sleeve Plugs: For looping, terminating and single cable applications, sleeve plugs seal off unused handle open-ing(s). Sleeve plugs also make a bridged (common) sleeve connection by holding braided shield in place in second plug.On special order, TT-Twin Plugs can be supplied with one 2-conductor finger and one 3-conductor finger.
- Ease of Assembly/Disassembly: Refer to illustration below for assembly/disassembly procedure; no handle retaining screws required. Tip and ring terminations are screw-type screws supplied).

SPECIFICATIONS

Tip Rod, Ring, Sleeve and Body: Copper alloy, natural finish.
Terminals and Terminal Screws: Copper alloy, natural finish.
Insulation: Thermoplastic.
Handle, Sleeve Plugs: Molded plastic.

1. DISASSEMBLY: Place plug on edge as shown. Push down and back on metal lip on finger (inside notch) with small screwdriver and slip plug finger out of handle. Turn plug over and repeat for other finger.

2. CABLE INSTALLATION: Fold braided shield on cable back over insulation. Insert leads through rear of plug finger, and screw finger (clockwise) onto cable with twisting motion until lead terminations lineup with threaded tip and/or ring openings. Fasten terminals on both fingers with screws provided.

3. To bridge sleeves (common connection), place free end of braided shield in remaining finger sleeve opening. Press sleeve plug firmly in place.

TT261: Two electrically-independent 2-conductor fingers in a black handle. Can be used with single or dual cables for independent tip circuits with common sleeve or separate sleeve circuits.

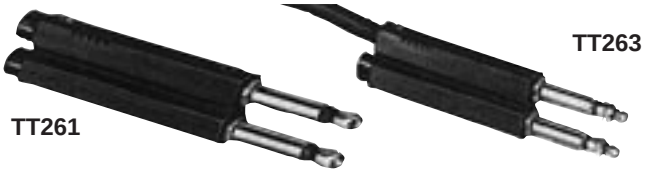

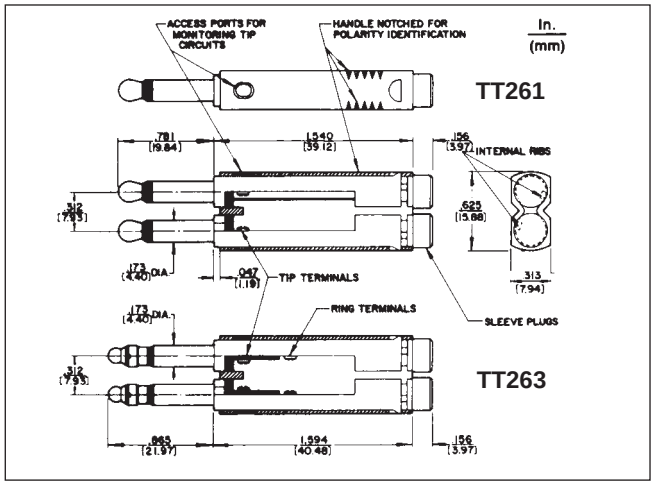

TT263: 6-circuit plug consists of two electrically-independent 3-conductor fingers with black handle. Can use single or dual cables for two electrically-independent 3-conductor fingers or common tip, ring and/or sleeve circuits.

Part Number[1]	Cond.	Terminals	Typical Mating Jack[2]	Handle	Handle Part Number	MIL Type Number
TT261	2	Screw[3]	TT31	Black	T2300-2	–
TT263	3		TT32B	Black	T2316	M642/13-3

1. TT-Twin Plug plugs can be supplied with one, 2-conductor plug finger and one, 3-conductor plug finger in the same handle (on special order).
2. Switchcraft Part Numbers. See additional mating jacks in this section.
3. Switchcraft Replacement screw **P2240**, Terminal **P2642**. 2 each required with 2-conductor twin plugs; 4 each required with 3-conductor twin plugs.
4. Replacement Hole Plug Switchcraft **T2318** (Black) **T2319** (Red).

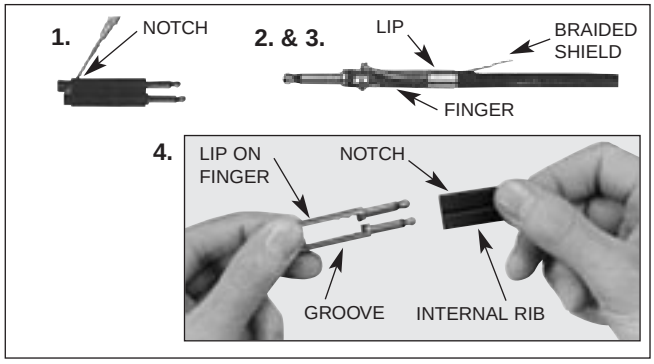

4. ASSEMBLY: Align grooves in fingers with internal handle ribs and insert fingers into rear of handle. Push fingers in until lips or rear of fingers snap into notches on handle.

DIMENSIONS ARE FOR REFERENCE ONLY Inch (mm)

® Registered trademark of Switchcraft, Inc.
Note: Contact your Switchcraft Representative for price and delivery

* Please visit the product pages on our website for the most up-to-date product information

1/4" COMMERCIAL PHONE PLUGS

2-CONDUCTOR LITTEL-PLUG® PLUGS

Numbers 240, 245, 250, 255 (typical)



Numbers 280, 281, 285, 285L, 288 (typical)



FEATURES

- Heavy duty machined copper alloy handle (shielded versions), tip and body for unsurpassed ruggedness.
- Bright nickel plating on exterior surfaces will not chip or corrode.
- Solder terminals are tin electroplated for ease of soldering.
- One-piece tip rod staked into tip terminal ensures electrical continuity
- Heavy duty cable clamp provides secure strain relief.
- The proven industry standard phone plug for audio applications. Beware of imitations!
- Shielded handle versions recommended for applications where electromagnetic interference and physical abuse may occur.

SPECIFICATIONS

Sleeve, Tip and Body: Nickel-plated copper alloy.
Terminals: Solder lug - Tinned copper alloy.
Screw: Tin-plated (screws size 3-48).
Handles: Molded - black or red plastic. Shielded - machined Nickel-plated copper alloy. Tubular insulator inside handle.

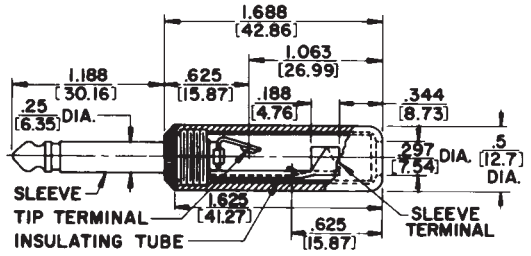

No. 280 typical – shown with solder lug terminals, cord clamp and shielded handle.

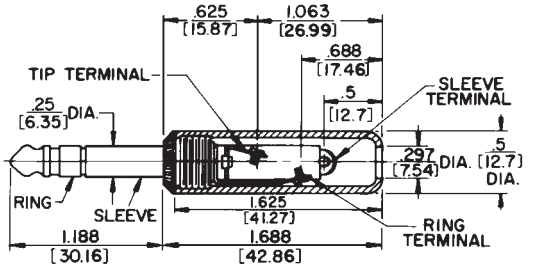

No. 280 typical – shown with screw-type terminals, plastic handle.

3-CONDUCTOR LITTEL-PLUG® PLUGS

Number 260 (typical)



Number 290 (typical)



2-CONDUCTOR PLUGS PART NUMBERS

Part Number	Terminals	Typical Mating Jack[2]	Handle*	Handle Part Number
240	Screw[3]	11	Black	M1002
◊C240	Screw[3] with Cable Clamp		Black	
245	Screw[3]		Red	M1003
◊C245	Screw[3] with Cable Clamp		Red	
250	Solder Lug & Cable Clamp		Black	M1002
255			Red	◊M1003
270	Screw[3]		Shielded	Handle: T10581 Insulator: A10071
◊C270	Screw[3] with Cable Clamp		Shielded	
280	Solder Lug & Cable Clamp		Shielded[1]	
281			Shielded[4]	
285			Shielded[4, 5]	
288			Shielded[1]	
285L			Shielded[4, 5, 6]	T2323
2P1298	Solder Lug & Cable Clamp		Without Handle	
◊2P1495	Screw[3]			

3-CONDUCTOR PLUGS PART NUMBERS

260	Screw	12B	Black	M1002
267	Solder Lug & Cable Clamp		Black	M1002
269			Red	◊M1003
290	Screw[3]		Shielded	Handle: T10581 Insulator: A10071
297	Solder Lug & Cable Clamp		Shielded	
◊2P1248	Solder Lug & Cable Clamp		Without Handle	

* Additional plug handle colors available (**P2714**) green, (**M1111**) blue, (**M1235**) gray. Fits any plug on which Numbers M1002, M1003 are standard.

1. Wide insulator between tip and sleeve allows use of 2-conductor plug in 3-conductor jack without shorting.
2. Switchcraft Part Numbers. See Mating Jacks Section.
3. Replacement Screw Part Number **P10292** (2-conductor plugs require 2 screws; 3-conductor plugs require 3 screws).
4. Unassembled.
5. Larger cable clamp to accommodate larger diameter cables.
6. Handle has .375" (9.53mm) diameter hole to accommodate larger diameter cables.

◊ Special order only. Contact Switchcraft.

DIMENSIONS ARE FOR REFERENCE ONLY Inch (mm)

* Please visit the product pages on our website for the most up-to-date product information

1/4" COMMERCIAL PHONE PLUGS (continued)

Switchcraft® commercial 2- and 3-conductor phone plugs are available with a logo handle in addition to the plain handle. The Switchcraft® name appears prominently on the shielded handle so the plugs can no longer be easily confused with "copycat" plugs found on the market today. Knurling on handles provides a convenient, positive fingertip grip for connect and disconnect. Plugs are available in the following popular variations:

1. 1/4" diameter finger, 2-conductors.
2. 1/4" diameter finger, 3-conductors.
3. .206" diameter finger, 2-conductors.

Plug handles accept cable up to .290" diameter.



SPECIFICATIONS

Sleeve: Tip and Body: Plated copper alloy.
Terminals: Solder lug: Copper alloy, electro-tinned; Screw: Tin-plated (screw size #3-48).
Handles: Nickel-plated zinc (tubular insulator inside handle).

PART NUMBERS

NOTE: Plugs have 1/4" finger diameter unless otherwise specified.

Logo Handle	Plain Handle	Description	Typical Mating Jack
2-CONDUCTORS			
570	**270**	Screw terminals. Shielded handle.	11
580	**280**	Solder lug & cable clamp. Shielded handle.	
581	**281**	Solder lug & cable clamp. Shielded handle. Unassembled.	
585	**285**	Solder lug & cable clamp. Shielded handle. Unassembled. Larger cable clamp accommodates larger cables.	
588	**288**	Solder lug & cable clamp. Shielded handle. Wide insulator between tip and sleeve makes possible use as a 2-conductor plug in 3-conductor jack without shorting.	
S580	**S280**	Solder lug & cable clamp. Shielded handle. Plug finger has .206" diameter.	S11
3-CONDUCTORS			
590	**290**	Screw terminals. Shielded handle.	12B
597	**297**	Solder lug & cable clamp. Shielded handle.	
598	**298**	Solder lug & cable clamp. Shielded handle. Locking feature.	12B, 133

1. Other mating plugs are available.
2. Replacement screw, Part Number **P10292** (2-conductor requires 2 screws; 3-conductor requires 3 screws).

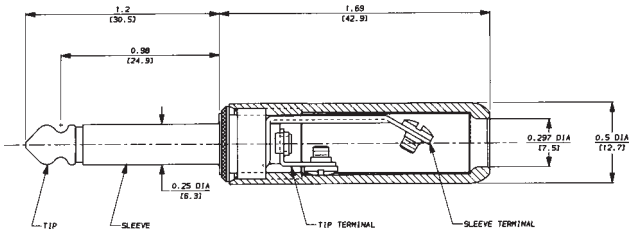

No. 570 (Typical)

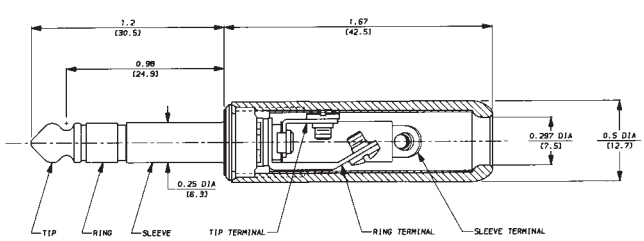

No. 590 (Typical)

DIMENSIONS ARE FOR REFERENCE ONLY Inch (mm)

® Registered trademark of Switchcraft, Inc.
Note: Contact your Switchcraft Representative for price and delivery

* Please visit the product pages on our website for the most up-to-date product information

1/4" COMMERCIAL PHONE PLUGS (continued)



Numbers 70, 184



Number 170, 181



Number 40



Number 160

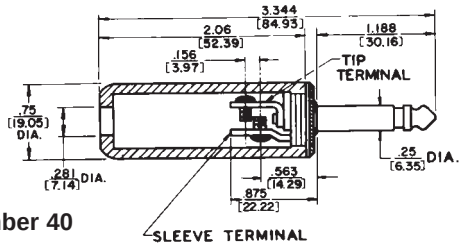

Number 40

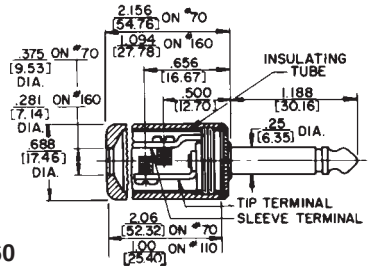

Number 160

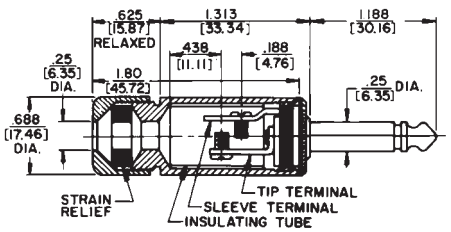

Number 170

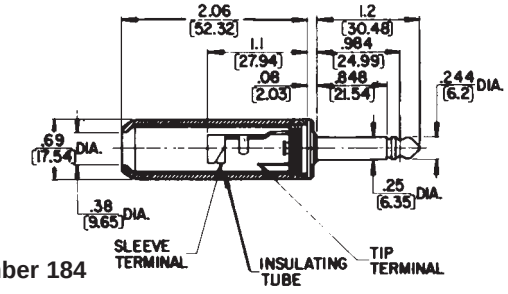

Number 184

2-CONDUCTOR/PLASTIC OR SHIELDED HANDLES

Popular general purpose plug fits all standard jacks. Available in both 2- and 3-conductor types. Two-conductor plugs available with black or red molded plastic, or 3 different lengths of brass nickel-plated (shielded) handles. 2-Conductor Special Military Plugs are also available.

FEATURES

- 1-piece tip rod staked into tip terminal insures tightness of plug.
- All essential conducting members are brass with external parts nickel-plated.
- Terminal screws: broad-headed. In production quantities, screws may be eliminated and terminals hot-tinned for easier soldering of wire leads to terminals (special order).
- Screw terminals have grooves which accommodate 1 or 2 cord tips.
- Thermoplastic handle insert for greater insulation.
- Plugs accept up to .25" maximum diameter cable (parallel or shielded cable).

SPECIFICATIONS

Sleeve, Tip and Body: Nickel-plated copper alloy.
Terminals: Solder lug: copper alloy, electro-tinned.
Screw: steel, tin-plated.
Handles: Shielded: Nickel-plated copper alloy.
Molded: black or red plastic.

Part Number	Terminals	Typical Mating Jack[2]	Handle	Handle Part Number
40	Screw (Replacement Screw Part No. P10013) 2 required	11 or Z15J	Black	M1001
70[3]			Shielded	Handle: T10141 Insulator: A10063
160			Shielded	Handle: T10451 Insulator: A10061
◊2P1251			Without Handle	–
170[1] 182QB 182QBD			Shielded	Handle: T11231[1] Insulator: A10064
184[3]	Solder Lug & Cable Clamp		Shielded	Handle: T10141 Insulator: A11372
184L[4]			Shielded	T2322

1. 2-piece shielded handle with built-in cable clamp for .25" diameter cable. Handles: Number T11231, handle; Number T11241, cap; see above for insulating tube; Number T1125, rubber washer.
2. Other mating plugs are available.
3. Handle has .380" (9.65mm) diameter hole to accommodate .375" diameter cable.
4. Handle has .451" (11.51mm) diameter hole to accommodate larger diameter cables.

DIMENSIONS ARE FOR REFERENCE ONLY Inch (mm)

* Please visit the product pages on our website for the most up-to-date product information

SILENT-PLUG PHONE PLUGS



No. 172

Silent-Plug plugs have unique circuit-closing device—stops hums, squeals and pops when plug is removed from jack. One-piece tip rod assembly insures plug quality. Utilizes cables up to .25" diameter (parallel or shielded cable). U.S. Patent No. 2,664,475.

SPECIFICATIONS

Sleeve, Tip and Body: Nickel-plated copper alloy.
Terminals: Copper alloy, tin-plated.
Screw: Cadmium plated (screws size 3-48).
Handles: Shielded machined copper alloy nickel-plated. Tubular insulator inside handle.

2-CONDUCTOR PLUGS

Part Number	Terminals	Typical Mating Jack	Handle	Handle Part Number
172	Screw (Replacement Screw Part No. P-1011-3) 2 required	11	Shielded	Two-Piece[1] Ins. Tube A-1006-3
181 182	Solder Lug and Cable Clamp		Shielded[2]	Two-piece[1] Ins. Tube A-1137-1
				T-1014-1 Handle, A-1137-2 Ins. Tube

1. 2-piece shielded handle with built-in cable clamp for .25" diameter cable. Handles: Number **T1123-1**, handle; Number **T1124-1**, cap; Number **T-1125**, rubber washer. 2. Mylar tube insulation for greater protection.

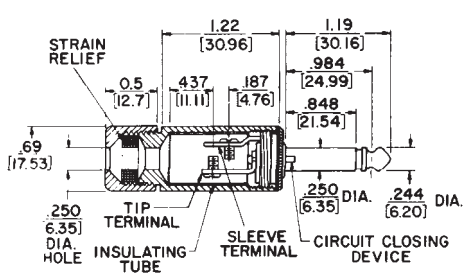

2-Conductor "Silent Plug", No. 172

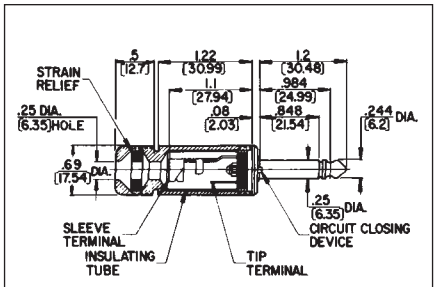

No. 181

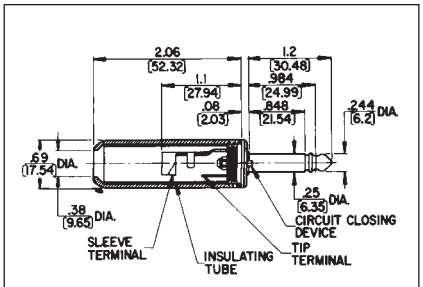

No. 182

LUG®-PLUG PHONE PLUGS



Nos. 350, 351, 355 No. 380

Similar to Littel-Plug phone plug. Same molded handles as used on Littel-Plug; metal handle, bright nickel-plated, only 1" long. Fits all standard jacks. See drawing for details.

SPECIFICATIONS

Sleeve, Tip and Body: Nickel-plated copper alloy.
Terminals: Solder lug: copper alloy, tin-plated.
Screw: plated steel.
Handles: Shielded: Nickel-plated copper alloy.
Molded: black or red plastic.

2-CONDUCTOR PLUGS

Part Number	Terminals	Typical Mating Jack[1]	Handle	Handle Part Number
350	Solder Lug	11	Black	M-1002
2P-1216				
380			Shielded	Handle: T-1060-1 Insulator: A-1007-2

1 Switchcraft part numbers. See Jacks Section for additional mating jacks.

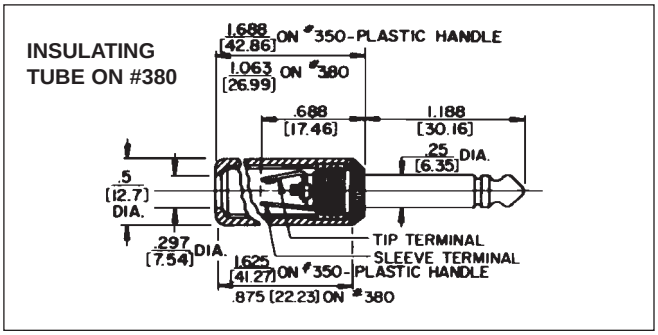

DIMENSIONS ARE FOR REFERENCE ONLY Inch (mm)

® Registered trademark of Switchcraft, Inc.
Note: Contact your Switchcraft Representative for price and delivery

* Please visit the product pages on our website for the most up-to-date product information

AUDIO LOUDSPEAKER PLUGS

SERIES 187



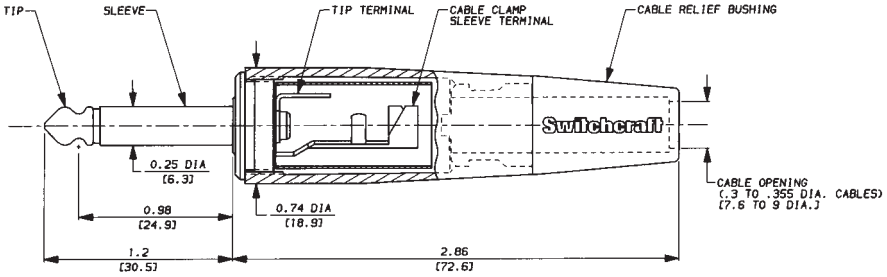

Number 187BL (Typical)

The 187 series 1/4" phone plugs are similar to the Switchcraft® 184 plugs, except that they offer an attractive tapered handle with a snap-in flex relief. Other features include:

- Larger tip terminal to accommodate wire sizes up to 14 AWG.
- Choice of Satin nickel or black finish.
- Black flex relief bushing can be specified in three different cable diameter openings for maximum reliability of cable.
- Plug is rated at 15A rms (maximum) for use with audio loudspeaker applications.

Part Number		Cable Relief Bushing diameter (inch)	Typical Mating Jack[1]
Nickel Finish	Black Finish		
187	187B	.3 to .33 (regular)	11 or Z15J
187L	187BL	.3 to .355 (large)	
187D	187BD	.2 to .30 (small)	

1. Other mating plugs are available. See Jacks Section.

SPECIFICATIONS

Sleeve, Tip and Body: Nickel-plated copper alloy.
Terminals: Solder lugs: tinned copper alloy;
Screw: tin-plated.
Handles: Die-cast zinc. Satin nickel or black finish.
Cable Relief Bushing: Black (thermoplastic elastomer).

HEAVY DUTY 1/4" COMMERCIAL PHONE PLUGS

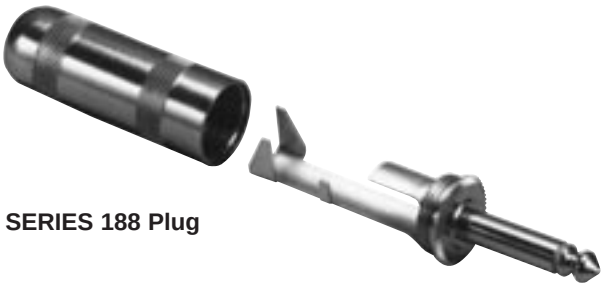

SERIES 188 Plug

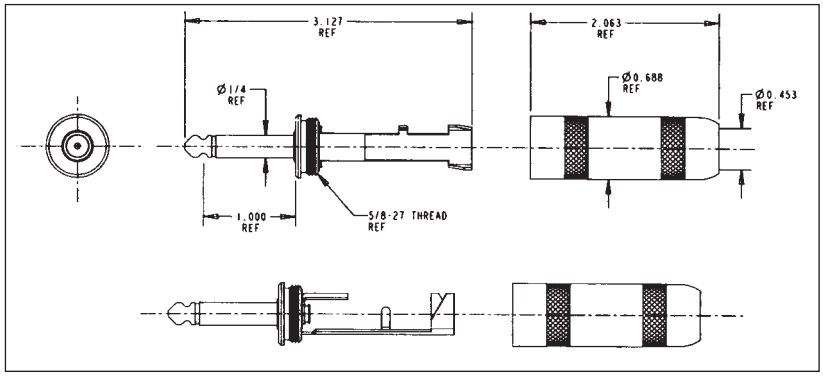

- Switchcraft's 188 is more heavy-duty than our competitor's biggest 1/4" commercial phone plugs.
- Large curved tip solder terminal makes it easier to solder to heavy gauge wires.
- Longer sleeve terminal allows more room to make sleeve solder connections.
- Extra-large cable clamp securely grips cable of up to .450" in diameter.
- Will easily accommodate some varieties of four conductor 14 gauge wire and parallel two conductor 12 gauge wire.
- Bendable tab on sleeve terminal makes termination easier by holding down cable while soldering. In addition, such mechanical retention makes for a superior solder connection.
- Will handle up to 15 A. rms (maximum).

(continued on next page)

DIMENSIONS ARE FOR REFERENCE ONLY Inch (mm)

* Please visit the product pages on our website for the most up-to-date product information

HEAVY DUTY 1/4" COMMERCIAL PHONE PLUGS (continued)

SPECIFICATIONS

Contact Resistance (typical *D.O.M.J.):< 0.020 ohms.
Dielectric Withstand Voltage: 500 VAC (minimum).
Insulation Resistance @ 500 VDC: 2,000 megohms (minimum).
Insulation Resistance (after MIL-STD-202 Salt Spray): 1,000 megohms (minimum).
Working Voltage: 250 VAC, 140 VDC.
Current Carry @ Working Voltage For 188 Plug (typical *D.O.M.J.): 15.0 AMPS.
Current Carry @ Working Voltage For 299 Plug (typical *D.O.M.J.): 6.0 AMPS.
Insert/Withdrawal Force: *D.O.M.J..
Soldering Requirement: ANSI/J-STD-001.
Temperature Range: -40° to + 85° Centigrade
U.L. Component Recognition File No.: E118169.
Life: *D.O.M.J.
Maximum Cable Size For 188 Plug: 12 AWG stranded, up to .450" diameter.
Maximum Cable Size For 299 Plug: .290" diameter.

MATERIALS

Tip: Nickel-plated copper alloy.
Sleeve: Nickel-plated copper alloy.
Handle: Nickel-plated copper alloy.
Tip Terminal: Copper alloy, electro tin-plated.
Cable Clamp: Copper alloy, electro tin-plated.
Insulators For 188 Plug: Thermojet plastic, thermoplastic, thermoplastic film, P.P.O.
Insulators For 299 Plug: Thermoplastic, thermoplastic film, glass epoxy.

*D.O.M.J. – Dependent On Mating Jack

SERIES 299 PLUG



Part Number	Maximum Cable Size	Mating Jack
299	.290" Diameter	Z15J

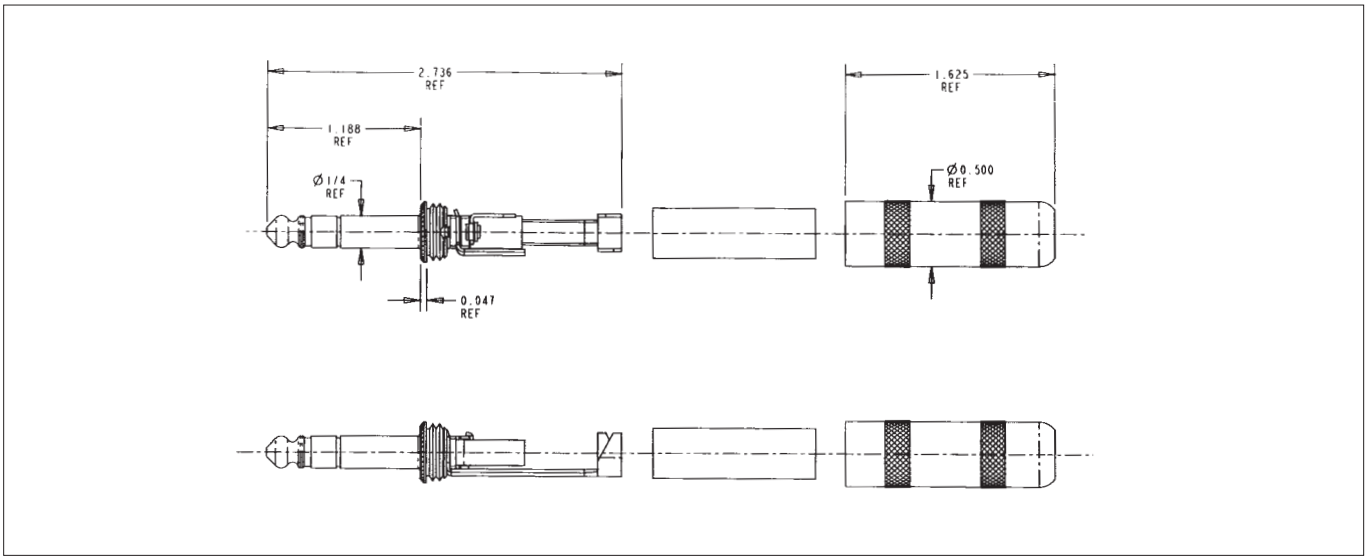

DIMENSIONS ARE FOR REFERENCE ONLY Inch (mm)

® Registered trademark of Switchcraft, Inc.
Note: Contact your Switchcraft Representative for price and delivery

* Please visit the product pages on our website for the most up-to-date product information

1/4" COMMERCIAL PHONE PLUGS (continued)

3-CONDUCTOR/PLASTIC OR SHIELDED HANDLES



Number 60



Number 190



Number 190A

Part Number	Terminals	Typical Mating Jack[2]	Handle	Handle Part Number
60	Solder Lug	12B	Black	M1001
◊90			Shielded	T10451
190			Shielded	Handle: T10141 Insulator: A10063
190A,190B & 190BL			Shielded	2-piece[1]

1. 2-piece shielded handle with built-in cable clamp for .25" diameter cable. Handles: **Number T11231**, handle; **Number T11241**, cap; **Number A10064**, insulating tube; **Number T1125**, rubber washer.
2. Other Mating Plugs are available.

◊ Special order only. Contact Switchcraft.

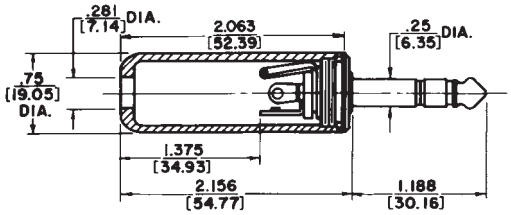

Number 60

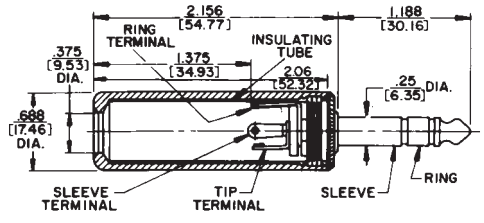

Number 90

.206" COMMERCIAL PHONE PLUGS

PHONE PLUGS FOR POLARIZED CONNECTIONS

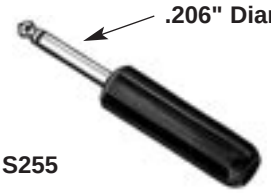

Numbers S250, S255

FEATURES

For applications requiring polarization (use of plugs of different sizes) to prevent insertion of incorrect equipment Littel-Plug® phone plugs featuring a sleeve and tip diameter of .206" are available. Mate with Number S128 Extension Jax® and S11 Littel Jax® jacks. Number S260 used interchangeable with Military Type M642/51 (Switchcraft Number 480) plugs. Mate with jacks S12B, S13B, M444, MT342B, MT344B and others.

2-CONDUCTOR PLUGS PART NUMBERS

Part Number	Terminals	Typical Mating Jack[1]	Handle	Handle Part Number
S250	Solder Lug & Cable Clamp	S11	Black	M1002
S280			Shielded	T10581 A10071

3-CONDUCTOR PLUGS PART NUMBERS

S260	Screw (Replacement Screw Part No. P10292) 2 required	S12B	Black	M1002
S267	Solder Lug & Cable Clamp			

1. Switchcraft® mating jacks.

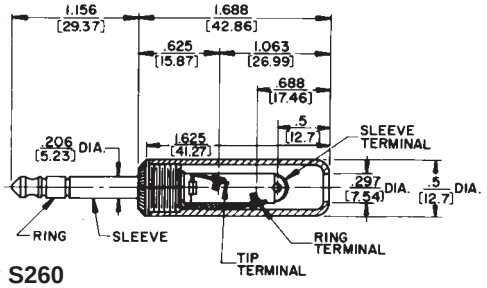

Number S260

DIMENSIONS ARE FOR REFERENCE ONLY Inch (mm)

* Please visit the product pages on our website for the most up-to-date product information

1/4" MITI-PLUG® AUDIO PLUGS



Number 174S

FEATURES

- 2-conductor phone plug with full shielding and resistance to extremely rough usage for electrified audio instruments such as amplifiers, synthesizers power heads and speaker systems requiring high-quality audio plugs.
- 3-WAY CABLE STRAIN/STRESS RELIEF: For hours of trouble-free operation under heavy and abusive use. Plug body internally threaded for screw-on strain relief for cables from .29" to .30" diameter, and an additional clamp for additional relief (and for smaller cables). A heavy copper alloy-plated steel spring at point of entry to plug keeps cable from folding and pinching. Flex relief spring recommended for cables with diameters of .265" maximum only.
- TERMINATING: Tip wire soldered to tip–braid folded back and secured with cable clamp.
- IDENTIFICATION: Customer or OEM name of logo can be applied to plastic handles for a minimal charge for personalization. (Contact Switchcraft for details).
- SPECIAL HANDLE COLORS: Plastic handles molded in custom colors on special order. Contact Switchcraft for details.

SPECIFICATIONS

Tip Rod & Body: Copper alloy.
Handle: Copper alloy or plastic (black).
Flex Relief Spring: Plated spring steel.
(Part No. P2848).
Strain Relief Clamp: Plated steel.
(Part No. P2380).
Insulation: Thermoplastic, glass reinforced.

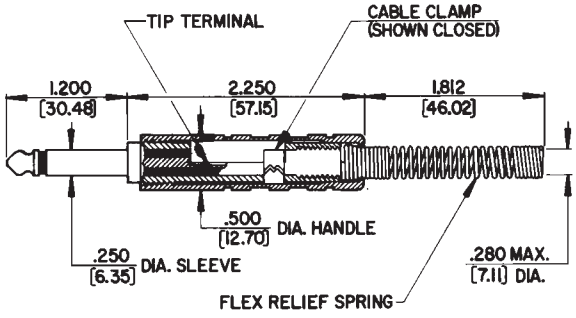

No. 174S

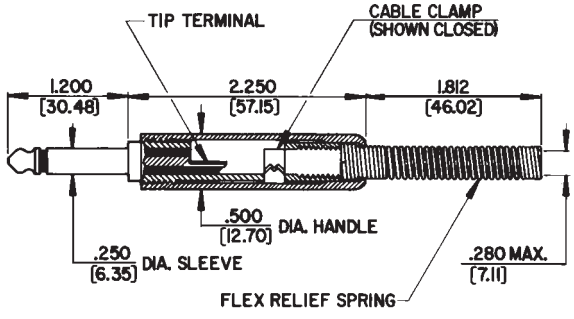

No. 176S

2-CONDUCTOR PLUGS

Part Number	Handle	Flex Relief	Typical Mating Jack[1]	Handle Part Number
173	Black plastic	U-Clamp	11	M1483
174S	Copper Alloy	Spring		T2313
175	Copper Alloy	None		T2313
176S	Black Plastic	Spring		M1483
177S	Red Plastic	Spring		
178	Black Plastic	None		M1483
◊**179**	Red Plastic	None		

1. Other mating plugs are available.
◊ Special order only. Contact Switchcraft.

DIMENSIONS ARE FOR REFERENCE ONLY Inch (mm)

® Registered trademark of Switchcraft, Inc.
Note: Contact your Switchcraft Representative for price and delivery

* Please visit the product pages on our website for the most up-to-date product information

1/4" FLAT PLUG PHONE PLUGS



Series 220



Series 230



Series S230



No. 238

FEATURES

- Ideal where conventional long handled plugs are not suited to design of equipment. “Chassis-hugging” phone plugs allow cables to be brought out at right angles to equipment.
- Removable plastic cap for easy assembly of wire leads to either screw or solder lug terminals. Adapter clips on types 220 and 225 make it convenient to clamp standard phone tips to terminals.
- Terminals and body of plug mechanically interlocked, eliminating probability of any shifting.
- Cover is black or red plastic; plug body is a rugged assembly of all metal parts.
- One-piece tip rod staked into tip terminal to insure tightness, no disassembly of tip during use of plug.
- High grade insulation.
- Terminal identification permanently stamped into base plate adjacent to each terminal. Letter “T” denotes tip connection; “R” denotes ring sleeve; “S” terminal is the sleeve or body connection (no identification on types 228, 238).
- Cover molds designed so customer’s name or trademark inserts can be added. Call for details.

SPECIFICATIONS

Tip Rod and Sleeve: Nickel-plated copper alloy.
Terminals: Tinned copper alloy.
Handle: Black or red plastic. Numbers 228 and 238, steel,nickel-plated.

2- OR 3-CONDUCTOR/SHIELDED HANDLE

Part No.	Terminal	Typical Mating Jack[1, 2]	Conductor	Handle	Handle Part No.
228	Solder	11	2	Shielded	S3067
238	Lug	12B	3		

1. Nickel plated steel handle. Two screws (**Part Number P15823**) required to mount handle.
2. Other mating plugs are available.
3. Accommodates cables from .219" outside diameter to .250" outside diameter Ideal for music equipment use.

3-CONDUCTOR/PLASTIC HANDLE .206" DIAMETER SLEEVE AND TIP

Part No.	Terminals	Typical Mating Jacks[1]	Handle	Handle Part No.[4]
230	Screw[3]	12B	Black	M1005
◊**235**	Screw		Red	
237	Solder		Black	M1005
◊**239**	Solder		Red	
◊**S230**	Screw[3]	S12B[2]	Black	M1005

1. Switchcraft Part Number Other mating plugs are available.
2. **Part Number S230** is the commercial version of military Type PJ068 (Switchcraft **Number 480**) plug. Mates with S12B, S13B, M444, MT342B, MT344B Jacks and others. Other mating plugs are available.
   For applications where it is desirable to polarize, use plugs of different sizes to prevent insertion of incorrect equipment. Sleeve and tip diameter of these plugs is .206" Mates with S830, S1230 Extension-Jax® jacks and S12B, S13B Littel-Jax® phone jacks.
3. Switchcraft Replacement **Part Number P10292**. 3 screws required.
4. Three screws (**Number P1039**) required to mount handle.

◊ Special order only. Contact Switchcraft.

2-CONDUCTOR/PLASTIC HANDLE

Part No.	Terminals	Typical Mating Jack[1]	Handle	Handle Part No.[3]
220	Screw	11	Black	M1005
225	Screw		Red	M1006
227	Solder Lug		Black	M1005
229	Solder Lug		Red	M1006
2P1509	Screw		Less Handle	–

1. Switchcraft Part Number; see jack section for additional mating jacks.
2. Switchcraft replacement **Part Number P10292**. 2 screws required per plug. Clips for phone tips. **Part Number S1832**.
3. Three screws (**Number P1039**) required to mount handle.

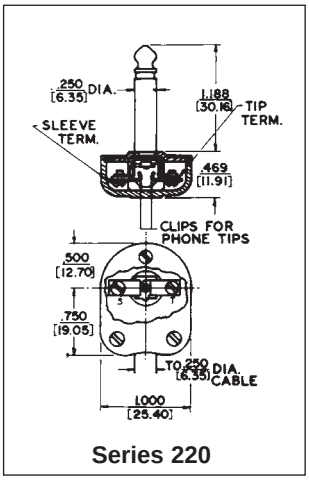

Series 220

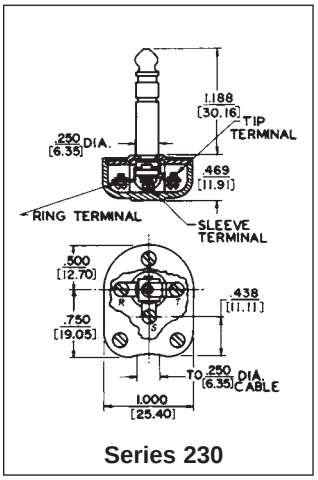

Series 230

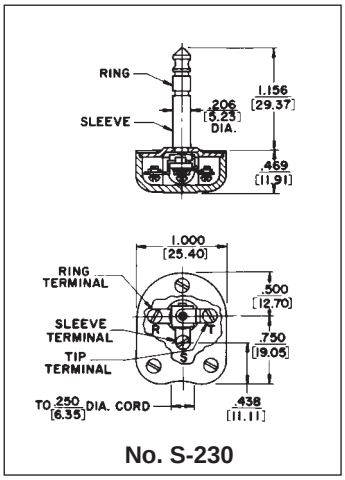

No. S-230

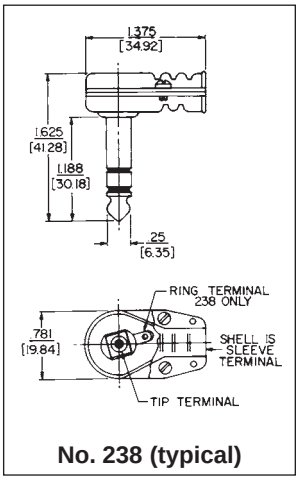

No. 238 (typical)

DIMENSIONS ARE FOR REFERENCE ONLY Inch (mm)

* Please visit the product pages on our website for the most up-to-date product information

RIGHT-ANGLE AUDIO PHONE PLUG

FEATURING 3-PIECE CONSTRUCTION AND FAST TERMINATION/ASSEMBLY

Switchcraft's 2- or 3-conductor right-angle audio phone plugs are designed for OEMs and users of commercial phone plugs. The plugs offer large terminals for easy wiring, and only three pieces to assemble - handle, insulator and finger/housing assembly and rugged reliability for stable, long-term, trouble-free operation.



226

FEATURES

- Easy Termination: Large terminals accept up to 16 AWG wiring (cables up to .25 inch diameter)
- 3-Piece Assembly: Screw on the handle for quick and easy assembly; minimizes labor costs.
- Rugged: All metal exterior construction.
- Low Profile: Only 1/2 inch wide. Ideal for crowded, multi-channel panels. Right-angle handle minimizes space required behind equipment.
- Knurled Handles: Positive grip during connect/disconnect.
- Rugged Cable Clamp: Isolates pulling and twisting strains.

SPECIFICATIONS

Tip, Rod and Handle: Nickel-plated copper alloy.
Housing/Sleeve: Nickel-plated.
Tip Terminal: Tin-plated copper alloy.
Sleeve (Clamp) Terminal: Tin-plated steel.
Insulation: Thermoplastic.
Dielectric Withstanding Voltage: 500 Vac.
Insulation Resistance: 50,000 Megaohms minimum (initial).
Operating Temperature: -20°C to +65°C.

Part Number	Description	Typical Mating Jack
236	3-conductor 1/4" right-angle commercial plug.	12B, 13B 112B, 113B
226	2-conductor 1/4" right-angle commercial plug	11, 12A 111, 112A

No. 236

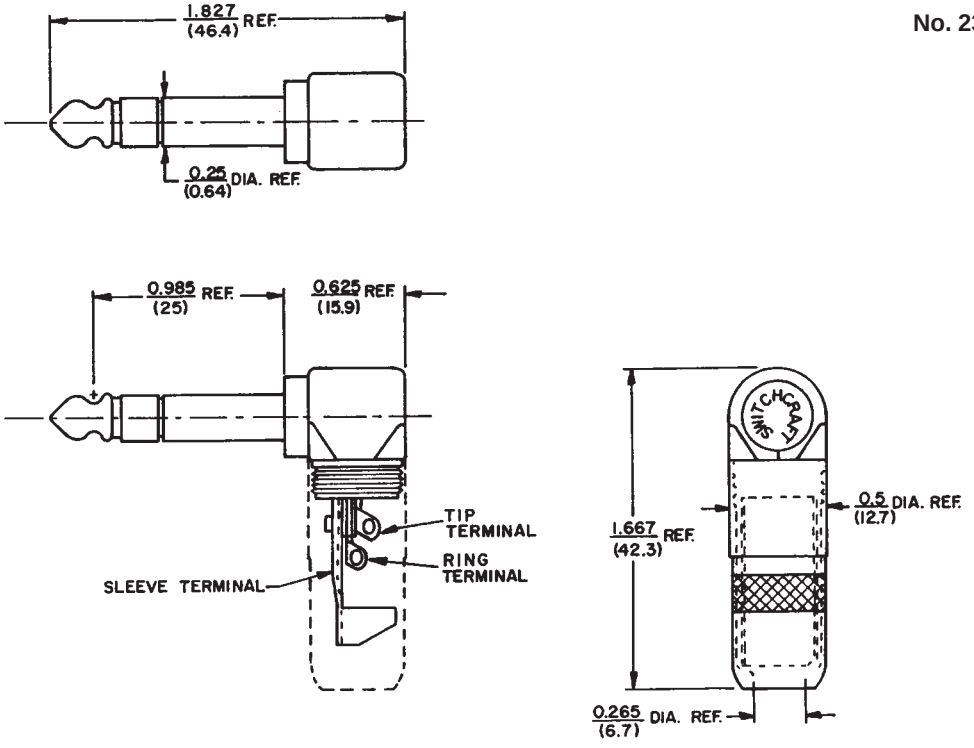

No. 236

DIMENSIONS ARE FOR REFERENCE ONLY Inch (mm)

® Registered trademark of Switchcraft, Inc.
Note: Contact your Switchcraft Representative for price and delivery

* Please visit the product pages on our website for the most up-to-date product information

1/4" LOCK-EXTENSION JACKS AND PLUGS



Number 133



Number 298

FEATURES

Modified Littel-Plug® phone plug, 2- or 3-conductor, with coupling ring that can be threaded to thread projection of mating panel jack or to threaded end of the Lock-Extension Jax®. Locks connection after plug has been fully inserted into its mating panel jack or Extension Jax®.

Lock-Plug® makes proper contact to mating jack without tightening or attaching coupling ring, when rapid disconnect may be desired. Lock-Plug fits any standard jack with 3/8"-32 thread bushing with .094" of the bushing exposed. Lock-Extension Jax also will mate properly with standard phone plugs, where no "lock" requirement exists.

SPECIFICATIONS

Lock-Plug Tip Rod, Body, Handle and Coupling Ring: Nickel-plated copper alloy.
Terminals: Brass, electro-tinned. Solder lug design, cable clamp part of sleeve terminal.
Insulation: Rigid plastic.

LOCK-EXTENSION JAX®

Housing (or Sleeve) and Handle: Nickel-plated copper alloy.

TERMINALS:

Sleeve: Plated steel. Tip and Ring: integral part of tip and ring springs.
Springs: Spring tempered copper alloy.
Insulation: Molded thermoplastic insert. Rigid plastic terminal washer.

LOCK-PLUG

Part Number	Cond.	Terminals	Typical Mating Jack	Handle Part Number	Notes
282	2	Solder Lug & Cable Clamp	12A	T10581 A10071	Similar to Switchcraft Number 297 Littel-Plug except with coupling ring.
298	3		12B, 133		

LOCK-EXTENSION JAX®

Part Number	Cond.	Terminals	Typical Mating Plug	Handle Part Number	Notes
133	3	Solder Lug & Cable Clamp	298	T1485	Sleeve terminal has cable clamp. Similar to Switchcraft® Number 131 Extension-Jax®.

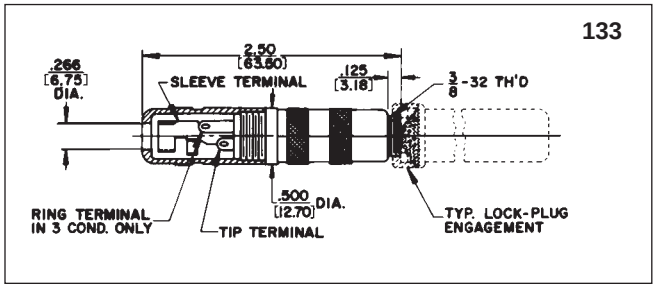

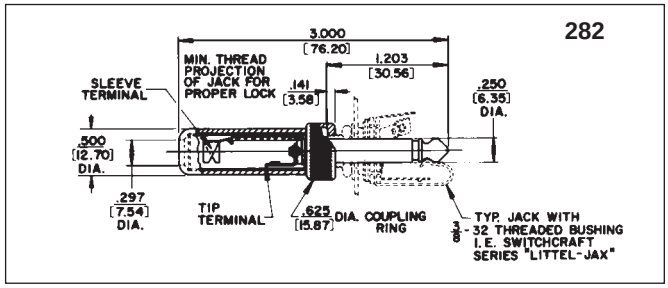

DIMENSIONS ARE FOR REFERENCE ONLY Inch (mm)

* Please visit the product pages on our website for the most up-to-date product information

3.5 MM HEAVY DUTY STEREO PLUGS

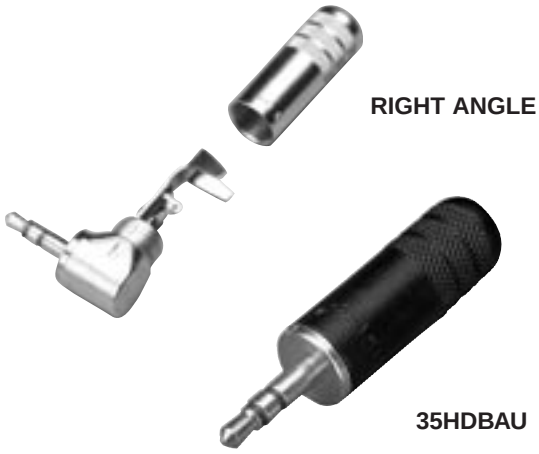

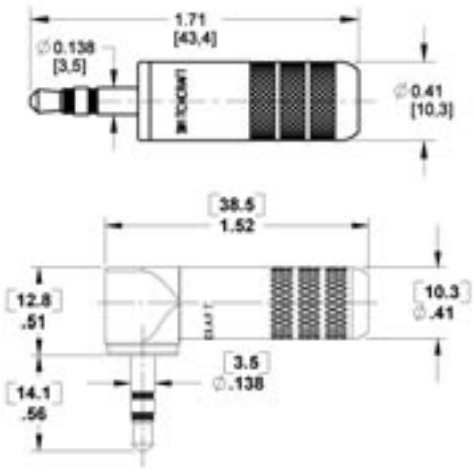

3.5MM STEREO PLUGS

FEATURES

- Heavy duty 3.5mm plugs for audio, instrument, other applications.
- Large cable clamps for rugged use.
- Available in straight or right angle.
- One piece tip rods for added durability.
- Available in nickel, gold, and black finishes.
- Large solder terminals for easy assembly.
- Standard handle accommodates cable sizes up to 0.290" Optional 'S' versions accommodate cable sizes up to 0.175"

35HDBN - Black Handle, Nickel Plug
35HDBAU - Black Handle, Gold Plug
35HDNAU - Nickel Handle, Gold Plug
35HDNN - Nickel Handle, Nickel Plug

BENEFITS

- One piece tip rod with flat for easy solderability.
- Compliments current line of 3.5 mm jacks.
- Insert molded plug finger.
- Heavy Duty cable clamp provides better strain relief for larger cables
- Longer cable clamp for easier plug assembly and more room for solder connections
- Knurl on the back of handle provides ergonomic gripping surface to tighten plug
- Tubular insulator included to prevent solder joints from contacting handle
- Longer handle for improved gripping surface and easy plug withdrawal from jack
- Large solder terminal for easy solderability

MARKETS

- Audio
- Consumer electronic equipment
- Broadcast studios
- Home recording equipment
- Audio cable assembly manufacturers
- Instrumentation
- Test equipment

SPECIFICATIONS

Contact Resistance: <0.020 ohms
Dielectric Withstand Voltage: - 250 VAC (min.)
Insulation Resistance @ 500 VDC: 2,000 megohms (min.)
Working Voltage: - 250 VAC, 140 VDC
Current Carry @ Working Voltage: 4 AMPS
Insert/Withdrawal Force: - Typical 2.5/2 pounds
Temperature Range: 0° to 66° Centigrade (operating)
Passed MIL-STD-202F Method 107G (Thermal Shock), and Method 201 (Vibration)
Life: - 5000 cycles
Maximum Cable Size: - .250? dia.

MATERIALS

Tip Rod: Copper alloy, tin, or gold-plated
Ring: Copper alloy, nickel, or gold-plated
Sleeve: - Copper alloy, nickel, or gold-plated
Handle: Copper alloy, nickel, or gold-plated
Cable Clamp: - C.R.S., tin-plated
Solder Terminal: Copper alloy, tin-plated
Tubular Insulator: Clear plastic

ORDERING INFORMATION

1. Order by part number
2. Contact Switchcraft for more information

Part Number	Description		
	Plug Finger	Handle	Notes
35HDNN	Nickel	Nickel	
35HDNNS	Nickel	Nickel	0.175" handle opening
35HDBN	Nickel	Black	
35HDBNS	Nickel	Black	0.175" handle opening
35HDNAU	Gold	Nickel	
35HDNAUS	Gold	Nickel	0.175" handle opening
35HDBAU	Gold	Black	
35HDBAUS	Gold	Black	0.175" handle opening
35HDRANN	Nickel	Nickel	Right angle
35HDRABAU	Gold	Black	Right angle
35HDRAAU	Gold	Nickel	Right angle

DIMENSIONS ARE FOR REFERENCE ONLY Inch (mm)

® Registered trademark of Switchcraft, Inc.
Note: Contact your Switchcraft Representative for price and delivery

* Please visit the product pages on our website for the most up-to-date product information

.141" MINIATURE PHONE PLUGS



Number 750

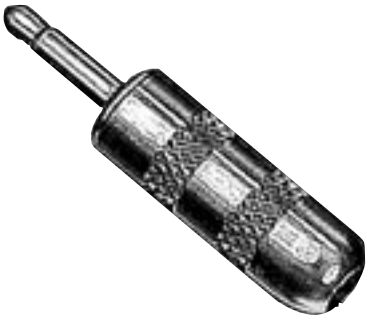

Number 780

FEATURES

- Miniature 2-conductor Phone Plug for use with Switchcraft Tini-Jax® miniature phone jacks. About 1/2 the size of Switchcraft Littel-Plug® phone plug. Average net weight, 1/8 ounce.
- Various terminal combinations: (a) Dual purpose sleeve terminal may be clamped over metal braid or shielded cables; provides cable anchor. Easily soldered for perfect electrical connection. (b) Screw terminal design (no cable clamp) for cable. Terminals that can be more suitably connected by screws.
- 1-piece tip rod staked into mating terminals; no disassembly of tip during use of plug. Terminals and body of plug interlocked mechanically.
- Available in black or red plastic handles or brass nickel-plated handles for shielding. Can be used with cables up to .188" outside diameter.

SPECIFICATIONS

Sleeve, Tip and Body: Nickel-plated copper alloy.
Terminals: Copper alloy, electro-tinned. Solder lug or screw type (Screws #0-80).
Handle: Molded black or red plastic.
Copper alloy, nickel-plated.

Part Number	Terminals	Typical Mating Jack[1]	Handle	Part No.
740	Screw[2]	41	Black	M1055
745			Red	M1056
750	Solder Lug & Cable Clamp		Black	M1055
755			Red	M1056
2P1384			Less Handle	–
770	Screw[2]		Shielded	T13631
780	Solder Lug & Cable Clamp		Shielded	T13631

No. 740

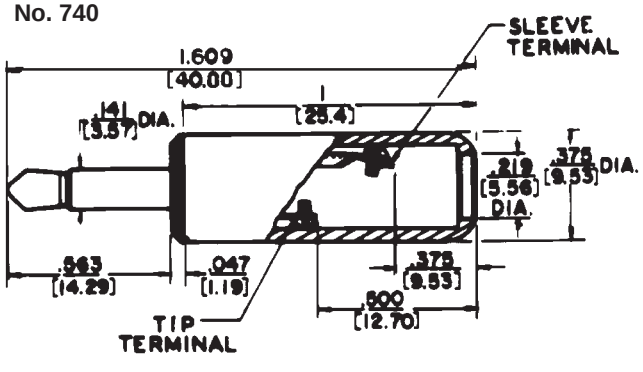

No. 750

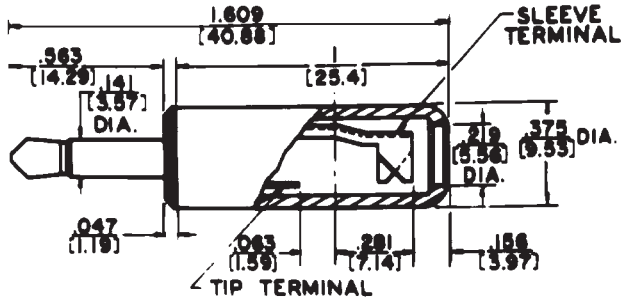

1. Other mating plugs are available.
2. Switchcraft replacement **Part Number P1153**. 2 screws required per plug.

DIMENSIONS ARE FOR REFERENCE ONLY Inch (mm)

* Please visit the product pages on our website for the most up-to-date product information

.097" SUBMINIATURE PHONE PLUGS



Numbers 850, 880



Number 851

FEATURES

- Subminiature, 2-conductor phone plugs are 1/3 the size of standard phone plugs, with the uniformity, dependability, and quality construction of Switchcraft Littel-Plug® and Tini Plug® phone plugs. 50 W soldering with 60/40 solder recommended for terminating.
- Switchcraft's 852, 853, 857, 858, 882 and 883 have a wider insulator between the tip and the sleeve. The wide insulator prevents the tip of the plug from shorting out between the tip spring and the sleeve of the jack during insertion.

Micro-Plug® PLUG - Sleeve terminal incorporates cable clamp. May be clamped over mated braid to anchor shielded cable; solders readily for perfect electrical connection. Terminals and plug body interlocked mechanically. Accommodates cable up to .125" Combined length, handle and tip: 1.106" outside diameter, .250" outside diameter handle.

LOCK Micro-Plug® PLUG - Similar to Micro-Plug plug, with addition of integral threaded collar that fastens to bushing of mating jack to prevent accidental disconnect. Requires at least .05" of exposed and usable thread on jack bushing to lock securely. Ideal for secure connections in critical medical and sensitive scientific instruments. Combined length, handle and tip: 1.046". Various molded cable assemblies incorporating Micro-Plug Subminiature phone plugs with plastic handles are available.

SPECIFICATIONS

MATERIALS

Tip, Rod and Body (also integral Coupling Collar on Lock Micro-Plug): Nickel-plated copper alloy.
Insulation: Molded thermoplastic.
Sleeve Termination and Cable Clamp: Tinned copper alloy.
Handle: Anodized aluminum; red, black or natural finish.

MECHANICAL

Life rating: 5,000 insertion/withdrawals.
Insertion/Withdrawal Force: 1 pound (depending on mating jack).

ELECTRICAL

Insulation Resistance: > 100 megohms
Dielectric Withstanding Voltage: 250V AC.

ENVIRONMENTAL

Thermal Range: -55°C to +85°C (non-operating); -20°C to 65°C (operating).
Thermal Shock: Mil-Std 202, Method 107.
Humidity: Mil-Std 202, Method 106.
Salt Spray: Mil-Std 202, Method 101.

MICRO-PLUG

Part Number	Terminals	Mating Jacks[1]	Handle	Handle Part No.
850	Solder Lug	TR2A	Black	T18623
852			Black	T18623
855			Red	T18622
857			Red	T18622
880			Natural	T18621
882			Natural	T18621
2P1419			Less Handle	–

LOCK MICRO-PLUG

Part Number	Terminals	Mating Jacks[1]	Handle	Handle Part No.
851	Solder Lug	TR2A	Black	T23123
853			Black	T23123
856			Red	T23122
858			Red	T23122
881			Natural	T23121
883			Natural	T23121

1. Switchcraft Part Numbers. Other mating plugs are available.

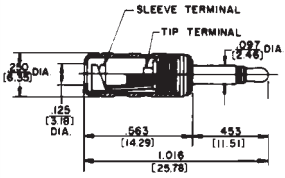

No. 850 (typical)

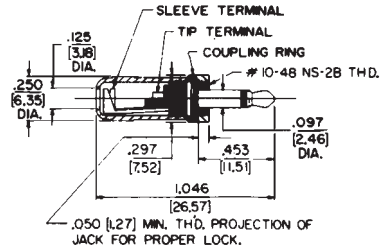

No. 851 (typical)

DIMENSIONS ARE FOR REFERENCE ONLY Inch (mm)

® Registered trademark of Switchcraft, Inc.
Note: Contact your Switchcraft Representative for price and delivery

* Please visit the product pages on our website for the most up-to-date product information

AUDIO ADAPTERS

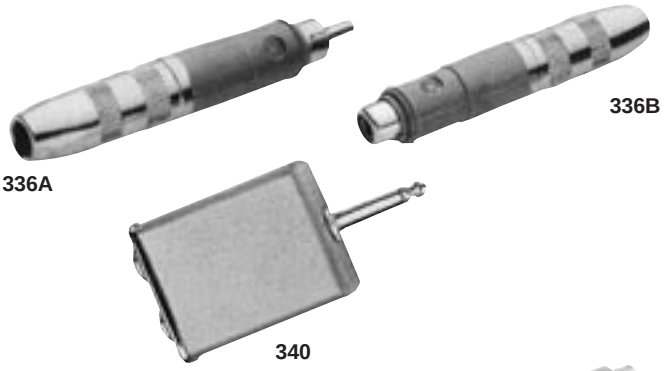













Part Number 332A (Not shown): 2-cond. phone jack input to old MC1M-style microphone connector output. Coupling ring can be screwed back to convert female microphone connector to male type. Shielded.

Part Number 336A: 2-conductor phone jack input to a phono plug output. Shielded.

Part Number 336B: 2-conductor phone jack input to phono jack output. Shielded.

Part Number 340: Two 2-conductor phone jack inputs connected in parallel to a 2-conductor phone plug output. Shielded.

Part Number 345A: Phono plug input to a standard 2-conductor phone plug output. Shielded.

Part Number 349A: Phono plug coupler. Phono Extension Jax® input to phono Extension Jax output. Shielded.

◊**Part Number 352A:** Stereo to monaural adapter. 3-conductor phone jack input to 2-conductor phone plug output. Extra-wide insulator prevents accidental damage should wrong connection be made. Shielded.

Part Number 361A: Phone plug coupler. Standard 1/4" inside diameter phone jack input to standard 1/4" inside diameter phone jack output. Ideal for connecting two cables terminated with 2-conductor phone plugs. Shielded.

Part Number 362A (Not shown): Phone plug coupler. Standard 3-cond. phone jack input to standard 3-cond. phone jack output. Ideal for connecting two cables terminated with 3-conductor phone jacks. Shielded.

Part Number 363: Phone jack coupler. Standard 1/4" 2-conductor phone plugs at each end to connect two cables terminated with phone Extension Jax. Shielded.

Part Number 364A: EIA Standard 2-conductor Tini-Jax® phone jack input to a standard 1/4" 2-conductor phone plug output. Shielded.

Part Number 365: EIA Standard 2-conductor Tini-Jax® phone jack input to a phono plug output. Shielded.

Part Number 370A: 2-conductor EIA Standard Tini-Plug® phone plug (.141" diameter finger) output to phono jack input. Adapts standard phono plug to small Tini-Plug. Shielded.

Part Number 374: 2-conductor phone jack input to a 2-conductor EIA Standard Tini-Plug (.141" diameter finger) phone plug output. Adapts standard phone plug to small Tini-Plug.

Part Number 376: EIA Standard Tini-Jax phone jack input to a 2-conductor Micro-Plug (.097" diameter finger) phone plug output. Adapts a Tini-Plug phone plug to a Micro-Plug phone plug.

Part Number 377: Micro-Jax phone jack input to a 2-conductor EIA Standard Tini-Plug (.141" diameter finger) phone plug output. Adapts a Micro-Plug phone plug to a Tini-Plug phone plug.

◊ Special order only. Contact Switchcraft.

DIMENSIONS ARE FOR REFERENCE ONLY Inch (mm)

* Please visit the product pages on our website for the most up-to-date product information

PHONO PLUGS



FEATURES

- Wide variety of styles for a wide range of applications.
- 3502A and 3502RA Series offer solid pin, large solder cups.
- 3558 Series utilize plastic handles for low cost applications.
- 3507 and 3504M have low-loss nylon insulators for RF applications. Can be used at 1 kW at 30 MHz.
- 3501M and 3501MC have the handle removed for tight spaces
- Options include nickel and gold plated, or black epoxy finishes.

SPECIFICATIONS

MATERIALS

Pin: Nickel or gold plated, copper alloy
Sleeve: Nickel or gold plated, copper alloy
Handle: Nickel or gold plated, or black epoxy finish, copper alloy (3558 Series: Thermoplastic)
Cable Clamp: Tin, copper alloy
Insulator: Rigid Plastic

ELECTRICAL

Current Carry @ Working Voltage (typical *D.O.M.J.): 6A
Contact Resistance (typical *D.O.M.J.): < 0.20 Ohms
Dielectric Withstanding Voltage: 500 VAC min.
Insulation Resistance @ 500VDC: 2,000 megohms min
Working Voltage: 250VAC, 140VDC

MECHANICAL

Life: *D.M.O.J
Temperature Range: -40∞ C to +85∞ C
*D.M.O.J. –Dependent On Mating Jack

DIMENSIONS ARE FOR REFERENCE ONLY Inch (mm)

® Registered trademark of Switchcraft, Inc.
Note: Contact your Switchcraft Representative for price and delivery

* Please visit the product pages on our website for the most up-to-date product information

PHONO PLUGS (continued)

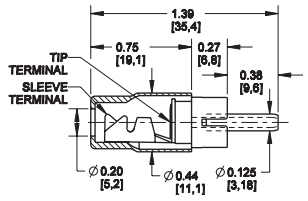

35581, 33582, 33585

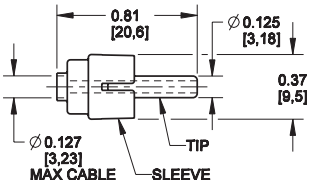

3501M & 3504M

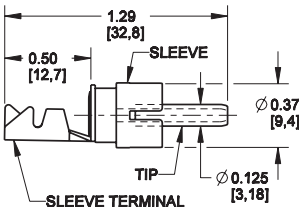

3501MC

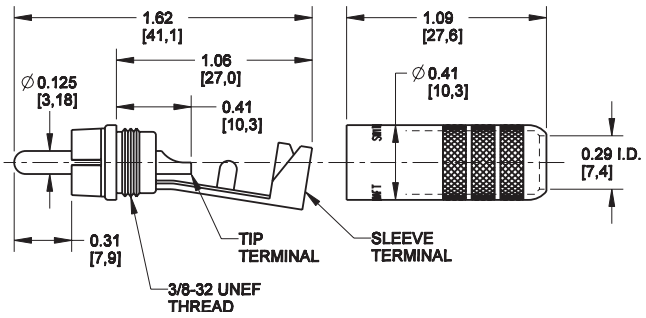

3502A

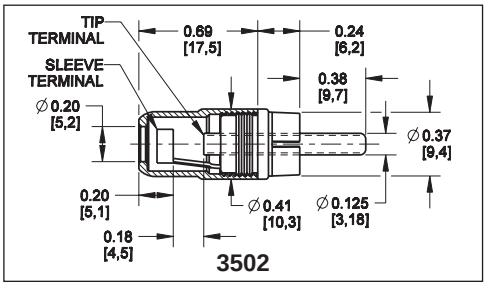

3502

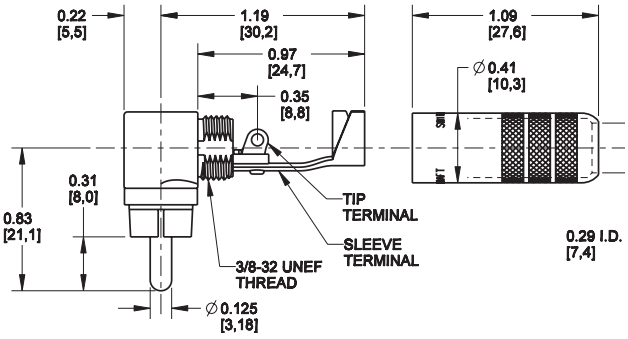

3502RA

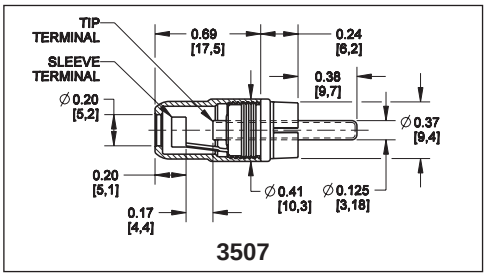

3507

Part Number	Description Pin	Typical Handle	Notes	Mating Jack
3502A	Nickel	Nickel		BP Series
3502AAU	Gold	Nickel		BP Series
3502ABAU	Gold	Black		BP Series
3502RA	Nickel	Nickel	Right angle	BP Series
3502RABAU	Gold	Black	Right angle	BP Series
3502RAAU	Gold	Nickel	Right angle	BP Series
35581	Nickel	Plastic	Red handle	BP Series
35582	Nickel	Plastic	Black handle	BP Series
35585	Nickel	Plastic	White handle	BP Series
3502	Nickel	Nickel		BP Series
3501M	Nickel			BP Series
3501MC	Nickel		Same as 3501M except with cable clamp	BP Series
3504M	Nickel		Same as 3507 less cable clamp and handle	3505F
3507	Nickel	Nickel	For RF applications	3505F
330F1	Nickel		2 inline jacks to 1 male plug, 4" gray shielded cable	BP Series
330F2	Nickel		1 inline jack, 1 male plug to 1 male plug, 4" gray shielded cable	BP Series

DIMENSIONS ARE FOR REFERENCE ONLY Inch (mm)

* Please visit the product pages on our website for the most up-to-date product information

MINIATURE POWER PLUGS

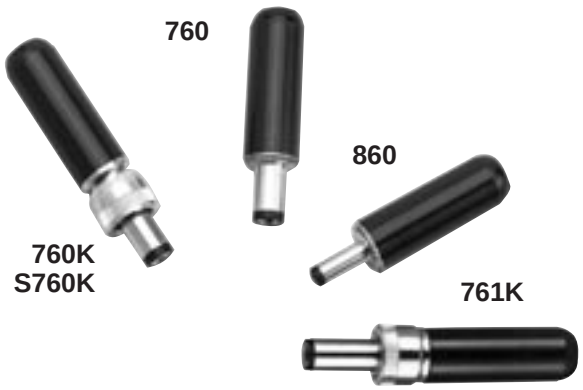

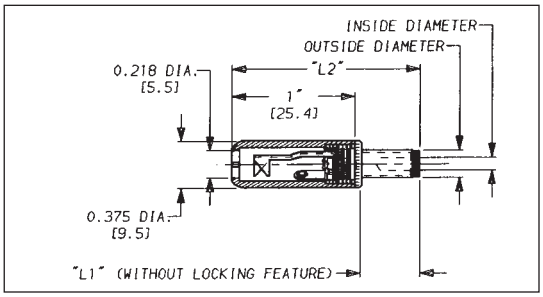

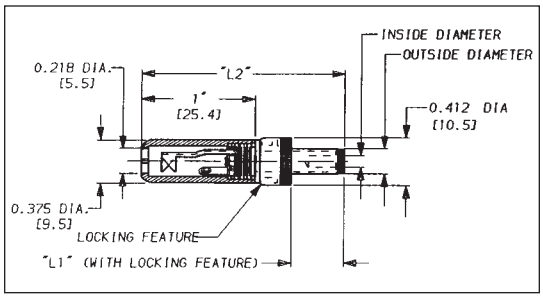

FEATURES AND BENEFITS

- 2-conductor power jacks.
- Hollow center pin available in 3 pin diameters and 2 finger lengths (See chart below).
- Locking option available for added security in critical applications.
- Molded plastic handles available in black or red.
- Sleeve terminal serves as cord clamp.

SPECIFICATIONS

Plug Sleeve and Pin: Nickel-plated copper alloy.
Lockring: Nickel-plated copper alloy.
Lockring Thread Size: 5/16 - 32 UNEF 2B.
Finger Insulator: Molded plastic.
Insulating Washers: Rigid plastic.
Sleeve Terminal: Copper alloy, electro-tinned.
Handle: Molded plastic.
Handle Thread Size: 5/16 - 24 UNF 2B.
Electrical: Current (Carry): 5 amps.

ORDERING INFORMATION

1. Order by part number. 2. Contact Switchcraft for more information.
3. ◊ Indicates "special order" only.

INSIDE DIAMETER TOLERANCES (PLUGS)

860/865:	.050" (.050 - .053) / 1.27mm (1.27 - 1.35)
S760/S765*:	.080" (.080 - .084) / 2mm (2.03 - 2.13)
760/765*:	.100" (.099 - .103) / 2.5mm (2.52 - 2.61)

OUTSIDE DIAMETER TOLERANCES (PLUGS)

860/865:	.150" (.149 - .153) / 3.81mm (3.78 - 3.89)
S760/S765*:	.218" (.217 - .221) / 5.5mm (5.51 - 5.61)
760/765*:	.218" (.217 - .221) / 5.5mm (5.51 - 5.61)

*includes locking (k) versions

PART NUMBERING and MATING CHART (Power plugs/Power jacks)

Part Number	Inside Diameter	Outside Diameter	Length "L1"	Length "L2"	Locking Feature	Tip Insulator	Handle Color	Handle Part Number	Switchcraft® Mating Jack[1]
760	.100"	.218"	.375"	1.42	No	Black	Black	M1055	712A, RAPC712, RASH712, RASM712, PC712A, RA712A
765	.100"	.218"	.375"	1.42	No	Black	Red	M1056	712A, RAPC712, RASH712, RASM712, PC712A, RA712A
760K	.100"	.218"	.375"	1.7	Yes	Black	Black	M1055	712A, PC712A
761K	.100"	.218"	.475"	1.8	Yes	Black	Black	M1055	L712A, PCL712A
765K	.100"	.218"	.375"	1.7	Yes	Black	Red	M1056	712A, PC712A
766K	.100"	.218"	.475"	1.8	Yes	Black	Red	M1056	L712A, PCL712A
◊2P1515	.100"	.218"	.375"	1.42	No	Black	No Handle	No Handle	712A, PC712A
S760	.080"	.218"	.375"	1.42	No	White	Black	M1055	722A, RAPC722, RASH722, RASM722, PC722A, RA722A
S765	.080"	.218"	.375"	1.42	No	White	Red	M1056	722A, RAPC722, RASH722, RASM722, PC722A, RA722A
S760K	.080"	.218"	.375"	1.7	Yes	Black	Black	M1055	722A, PC722A
S761K	.080"	.218"	.475"	1.8	Yes	Black	Black	M1055	L722A, PCL722A
S765K	.080"	.218"	.375"	1.7	Yes	Black	Red	M1056	722A, PC722A
S766K	.080"	.218"	.475"	1.8	Yes	Black	Red	M1056	L722A, PCL722A
2P1624	.080"	.218"	.375"	1.42	No	White	No Handle	No Handle	722A, PC722A
860	.050"	.150"	.375"	1.42	No	Black	Black	M1055	RAPC 732, RASH 732, RASM 732
865	.050"	.150"	.375"	1.42	No	Black	Red	M1056	RAPC 732, RASH 732, RASM 732

[1]See pages 130-134.

DIMENSIONS ARE FOR REFERENCE ONLY Inch (mm)

® Registered trademark of Switchcraft, Inc.
Note: Contact your Switchcraft Representative for price and delivery

* Please visit the product pages on our website for the most up-to-date product information

PROFESSIONAL PUNCHDOWN TERMINAL (PPT)

Our Patchbays Now Feature the New Professional Punchdown Terminal (PPT) Our Patchbays Have Just Rounded A New Corner

Actually, the corners we rounded belong to our patchbays' revolutionary, new Professional Punchdown Terminal (PPT), making it perfectly compatible with the industry standard. We realized that achieving a new industry standard meant we couldn't cut any corners to get there.

The PPT design incorporates a split-barrel design and a more rugged, thicker housing to minimize the impact of repeated punchdowns. The split-barrel design eliminates the problems associated with the old "V-shaped" terminal designs. The PPT design distributes pressure evenly across both sides of the terminated wire, causing improved wire retention plus more reliable connections. The serrated teeth in the plastic housing firmly grip the wires, which also greatly improves wire retention. With the PPT, multiple wires can be terminated to a single contact, and a wide range of wire gauges can be used. Look for Switchcraft's PPT in our MTP and TTP Series of audio patchbays, and in our new Backpanel Series.

All Switchcraft audio patchbays incorporate heavy gauge materials and our high quality nickel-plated, steel framed jacks. Gold-plated, crossbar contacts come standard!



MATERIALS

Housing: Thermoplastic (UL 94V-0)
Contacts: High strength copper alloy, tin plated
Wire size: Accommodates #22, 24, or 26 AWG, stranded or solid

Accessories Part Number	Description
K459	PPT replacement kit consists of 15 of each color* (IDC/IDC)
K460	PPT replacement kit consists of 15 of each color (IDC/wirewrap)
PT1LA	PPT impact punchdown tool
PT2B	Replacement bit for PT1LA tool
*Colors consist of red, black, white, yellow, blue, and orange.	

DIMENSIONS ARE FOR REFERENCE ONLY Inch (mm)

* Please visit the product pages on our website for the most up-to-date product information

FRONT ACCESS MTPFA/TTPFA SERIES

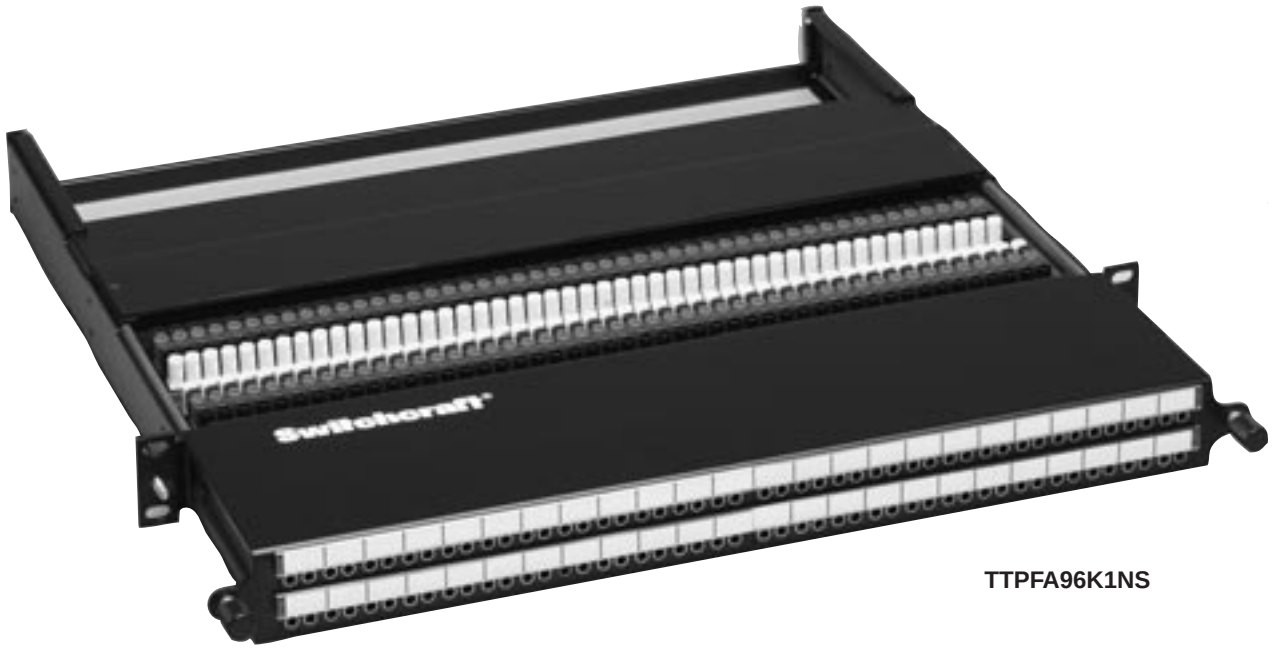

TTPFA96K1NS

The Front Access Series offers the end user the ease of re-terminating patchpoints from the front of the rack as opposed to the back. A slide out tray allows the user to slide out the punchdown terminals, and reconfigure the unit. An easy release mechanism on either side of the unit allows it to be pushed back into place and easy to grip locking nuts tighten the unit in place.

FEATURES AND BENEFITS

- Easy slide-out tray slides forward for easy re-termination from the front of the rack
- Available with either 48 MT style or 96 TT style jacks in a 1RU space
- Attractive, corrosion resistant nickel-plated, steel frame jacks
- Gold-plated switching contacts reduce contact resistance, improves reliability
- Extra wide designation strips for easy channel identification
- Rugged, attractive black epoxy-finished steel chassis
- Configurations available include normals strapped and normals brought out

SPECIFICATIONS

MATERIALS (JACKS)

Frame: Nickel-plated steel
Bushing: Nickel-plated brass
Tip, Ring and Shunt Springs: Nickel silver with welded contacts
Assembly Screws: Nickel-plated steel
Welded Contacts: Gold alloy

PANEL

Frame: C.R.S. black epoxy painted
Designation Strips: Black polycarbonate 94V-0
Designation Strip Covers: Clear polycarbonate
Jack Inserts: Thermoplastic 94V-0

MECHANICAL

Life: 30,000 cycles
Insertion Force: 7 lbs. maximum
Withdrawal Force: 1 lb. minimum
Operating: -20°C to +65°C

ELECTRICAL

Jack Contact Resistance: 30 milliohms initial maximum; 50 milliohms after life
Jack Insulation Resistance: 10,000 megohms maximum
Dielectric Withstanding Voltage: 500V at 60 Hz AC
Working Voltage: 100 milliamps or less; maximum 56.5 VDC

Ordering Information

Part Number	Type of Jack	No. of Jacks	Description
TTPFA96K1NS	TT	96	1.75" High, normals strapped
TTPFA96K1NO	TT	96	1.75" High, normals brought out
MTPFA48K1NS	MT	48	1.75" High, normals strapped
MTPFA48K1NO	MT	48	1.75" High, normals brought out

DIMENSIONS ARE FOR REFERENCE ONLY Inch (mm)

® Registered trademark of Switchcraft, Inc.
Note: Contact your Switchcraft Representative for price and delivery

* Please visit the product pages on our website for the most up-to-date product information

FRONT ACCESS MTPFA/TTPFA SERIES (continued)

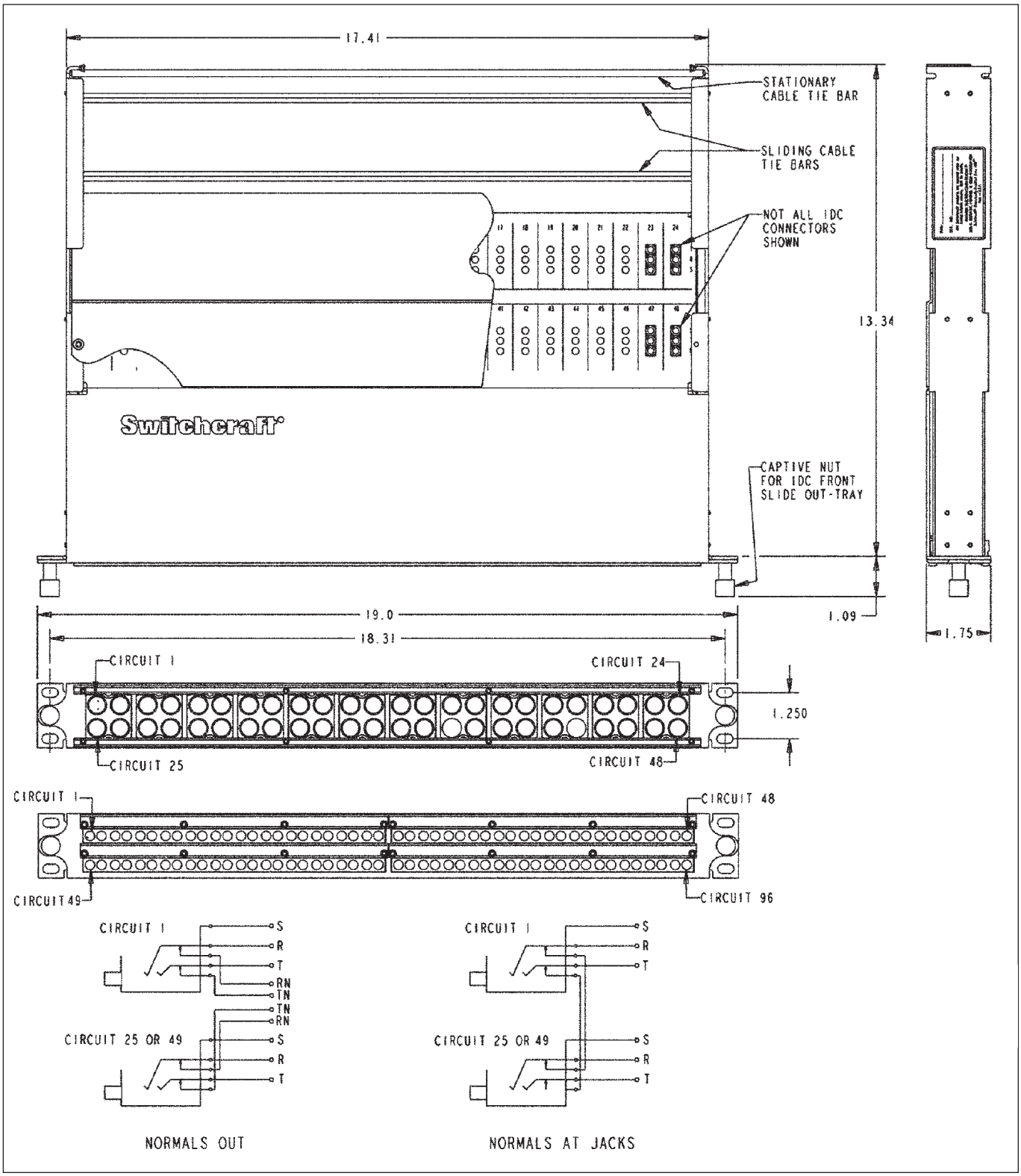

DIMENSIONS ARE FOR REFERENCE ONLY Inch (mm)

* Please visit the product pages on our website for the most up-to-date product information

MTP48K WIRED AUDIO SERIES

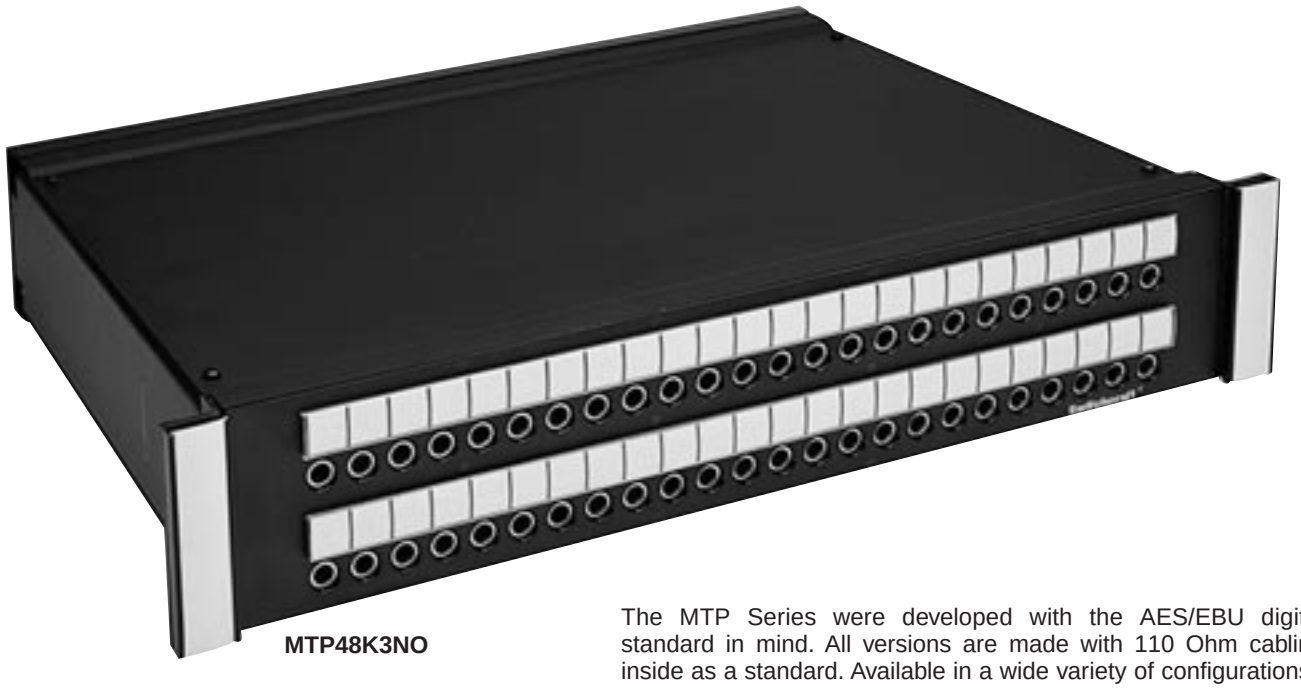

MTP48K3NO

The MTP Series were developed with the AES/EBU digital standard in mind. All versions are made with 110 Ohm cabling inside as a standard. Available in a wide variety of configurations.

FEATURES AND BENEFITS

- Unit features 48 MT style jacks in either 1RU (1.75"H) or 2RU (3.5"H) spaces
- All versions utilize AES/EBU wiring for complete digital compatibility
- Attractive, corrosion resistant nickel-plated, steel frame jacks
- Gold-plated switching contacts reduce contact resistance, improve reliability
- Rugged, attractive black epoxy-finished steel chassis
- Extra wide designation strips for easy channel identification
- 1RU version configurations include normals strapped and normals brought out
- 2RU version configurations include normals strapped, normals brought out, and sleeve normals brought out

SPECIFICATIONS

MATERIALS

JACKS

Frame: Nickel-plated steel
Bushing: Nickel-plated brass
Tip, Ring and Shunt Springs: Nickel silver with welded contacts
Assembly Screws: Zinc-plated steel
Welded Contacts: Gold alloy

PANEL

Front Channel: Black anodized aluminum
Frame: C.R.S. black epoxy painted
Designation Strips: Black polycarbonate 94V-0
Designation Strip Covers: Clear polycarbonate
Jack Inserts: Thermoplastic polyester

MECHANICAL

Life: 30,000 cycles
Insertion Force: 7 lbs. maximum
Withdrawal Force: 1 lb. minimum
Environmental: O°C to +50°C

ELECTRICAL

Contact Resistance: 30 milliohms maximum initial
Insulation Resistance: 10,000 megohms maximum
Dielectric Withstanding Voltage: 500 VAC at 60 Hz
Working Voltage: 140 VDC maximum
Current Rating: 100 milliamps

Ordering Information

Part Number	Type of Jack	No. of Jacks	Description
MTP48K1NS	MT	48	1.75" High, normals strapped
MTP48K3NS	MT	48	3.5" High, normals strapped
MTP48K1NO	MT	48	1.75" High, normals brought out
MTP48K3NO	MT	48	3.5" High, normals brought out
MTP48K3SNO	MT	48	3.5" High, sleeve normals out

DIMENSIONS ARE FOR REFERENCE ONLY Inch (mm)

® Registered trademark of Switchcraft, Inc.
Note: Contact your Switchcraft Representative for price and delivery

* Please visit the product pages on our website for the most up-to-date product information

MTP48K WIRED AUDIO SERIES (continued)

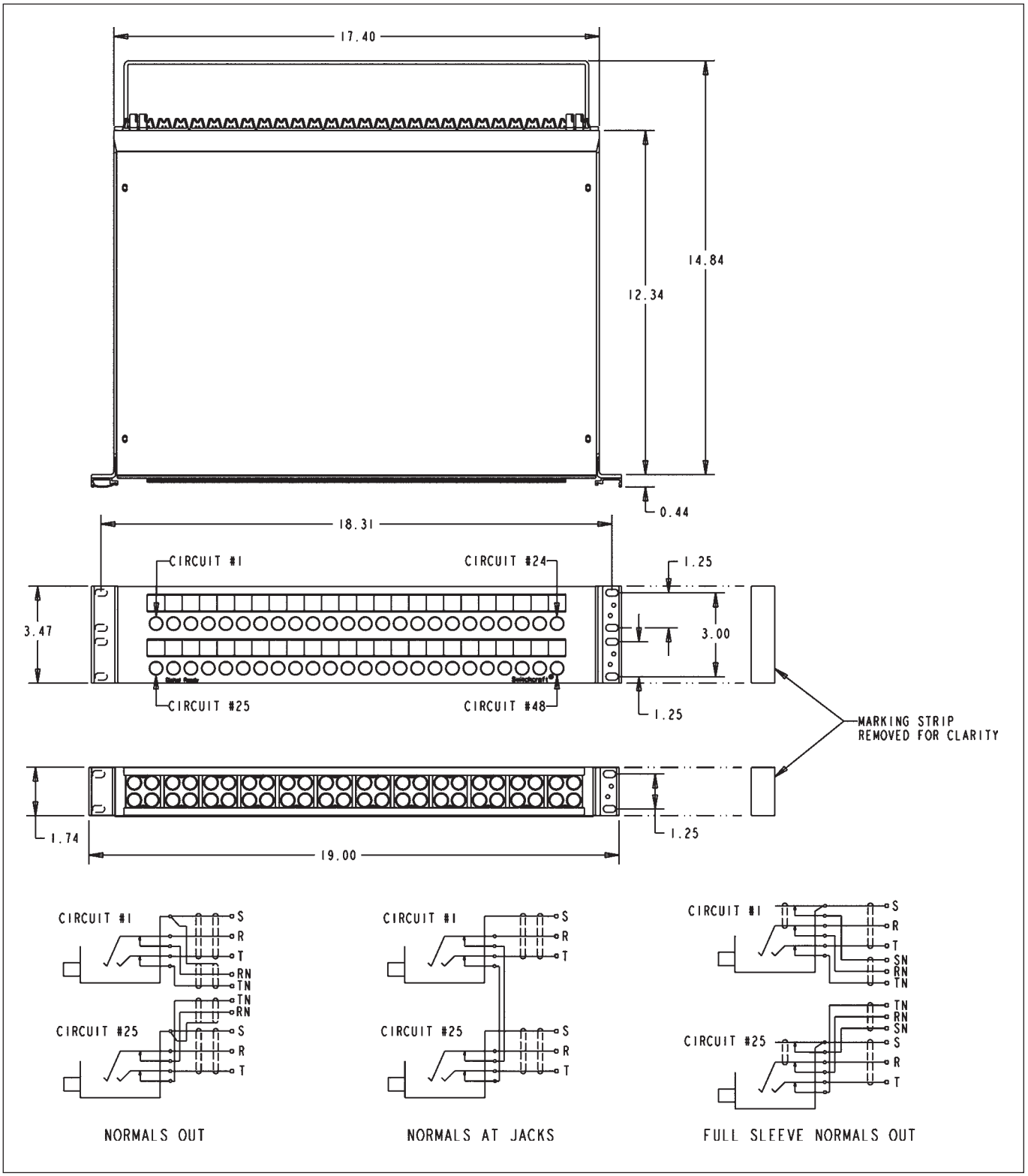

DIMENSIONS ARE FOR REFERENCE ONLY Inch (mm)

* Please visit the product pages on our website for the most up-to-date product information

TTP96K WIRED AUDIO SERIES

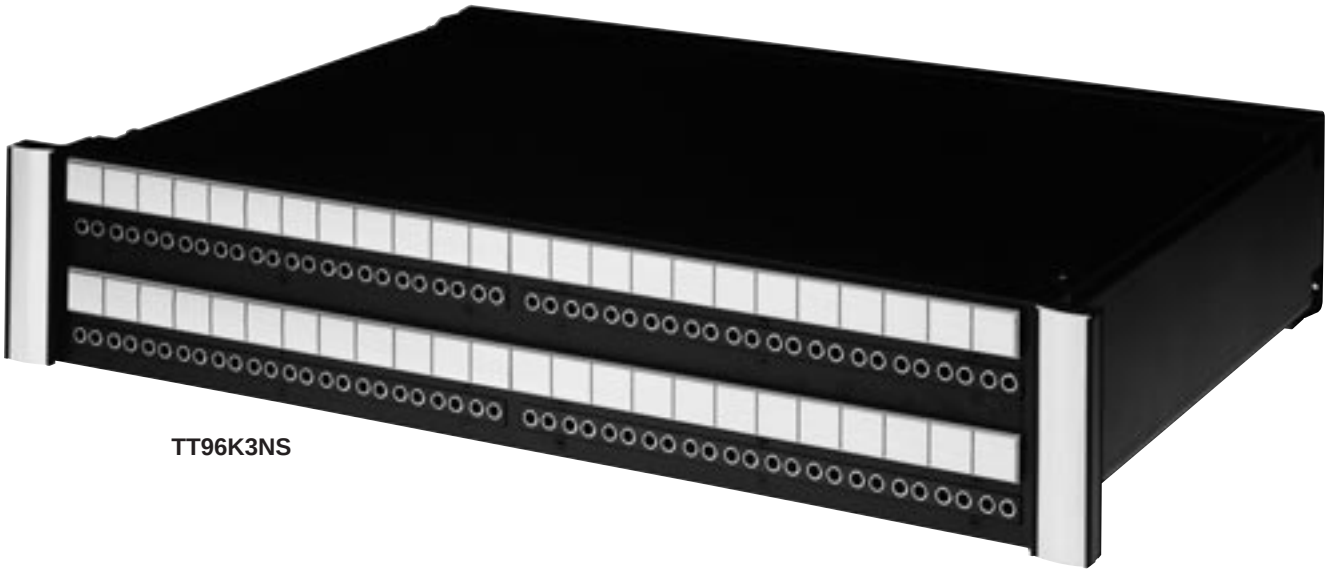

TT96K3NS

The TTP96K Series was developed with the AES/EBU digital standard in mind. As a standard the TTP96K utilizes 110 Ohm cabling inside.

FEATURES AND BENEFITS

- Unit features 96 TT style jacks in 2RU (3.5"H) space
- Utilizes AES/EBU wiring for complete digital compatibility
- Attractive, corrosion resistant nickel-plated, steel frame jacks
- Gold-plated switching contacts reduce contact resistance, improve reliability
- Rugged, attractive black epoxy-finished steel chassis
- Extra wide designation strips for easy channel identification

SPECIFICATIONS

MATERIALS

JACKS

Frame: Nickel-plated steel
Bushing: Nickel-plated brass
Tip, Ring and Shunt Springs: Nickel silver with welded contacts
Assembly Screws: Zinc-plated steel
Welded Contacts: Gold alloy

PANEL

Front Channel: Black anodized aluminum
Frame: C.R.S. black epoxy painted
Designation Strips: Black polycarbonate 94V-0
Designation Strip Covers: Clear polycarbonate
Jack Inserts: Thermoplastic polyester

MECHANICAL

Life: 30,000 cycles
Insertion Force: 7 lbs. maximum
Withdrawal Force: 1 lb. minimum
Environmental: O°C to +50°C

ELECTRICAL

Contact Resistance: 30 milliohms maximum initial
Insulation Resistance: 10,000 megohms maximum
Dielectric Withstanding Voltage: 500 VAC at 60 Hz
Working Voltage: 140 VDC maximum
Current Rating: 100 milliamps

Ordering Information

Part Number	Type of Jack	No. of Jacks	Description
TTP96K3NS	TT	96	3.5" High, normals strapped

DIMENSIONS ARE FOR REFERENCE ONLY Inch (mm)

® Registered trademark of Switchcraft, Inc.
Note: Contact your Switchcraft Representative for price and delivery

* Please visit the product pages on our website for the most up-to-date product information

TTP96K WIRED AUDIO SERIES (continued)

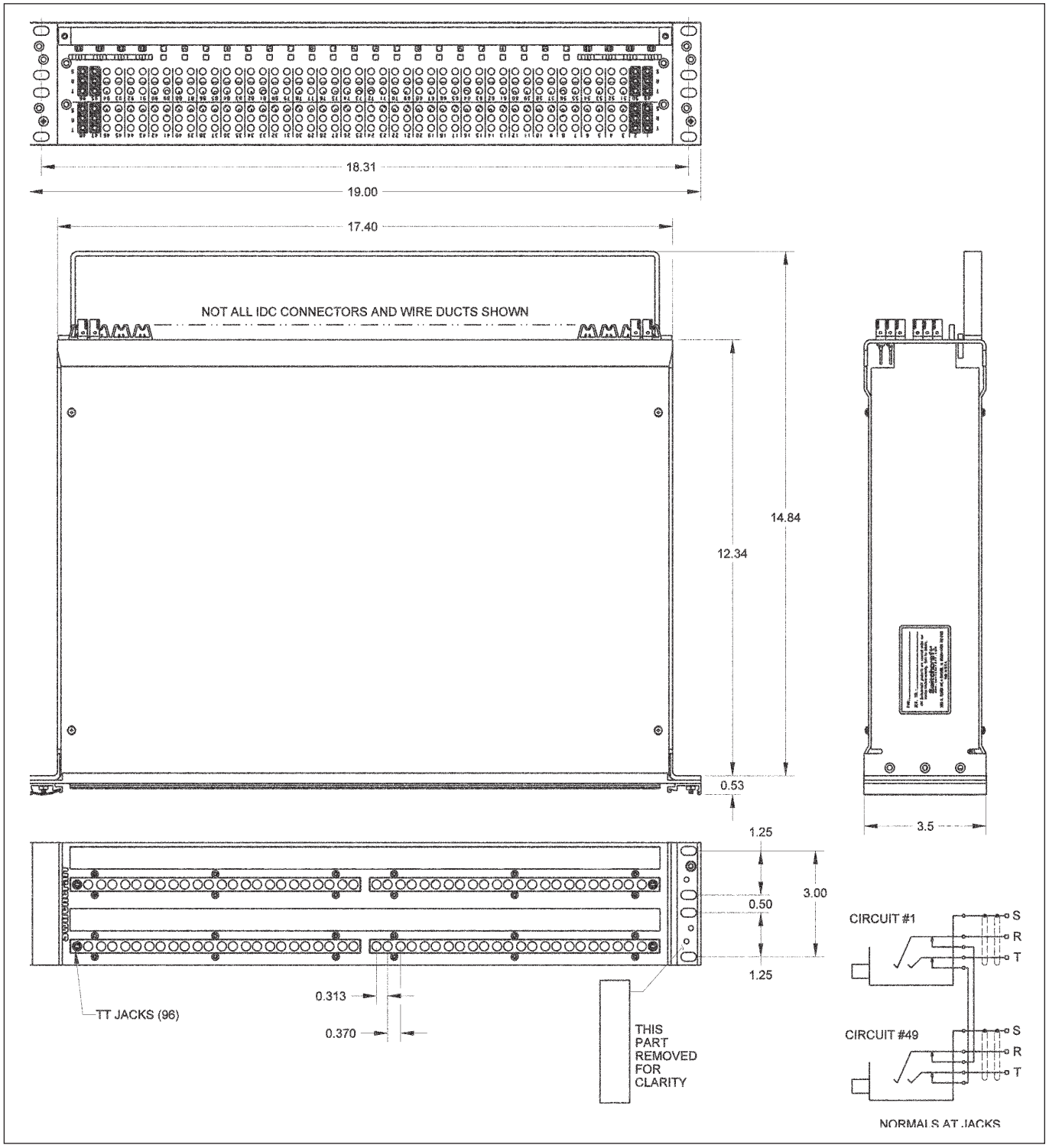

DIMENSIONS ARE FOR REFERENCE ONLY Inch (mm)

* Please visit the product pages on our website for the most up-to-date product information

MTPH/TTPH HARNESS AUDIO SERIES

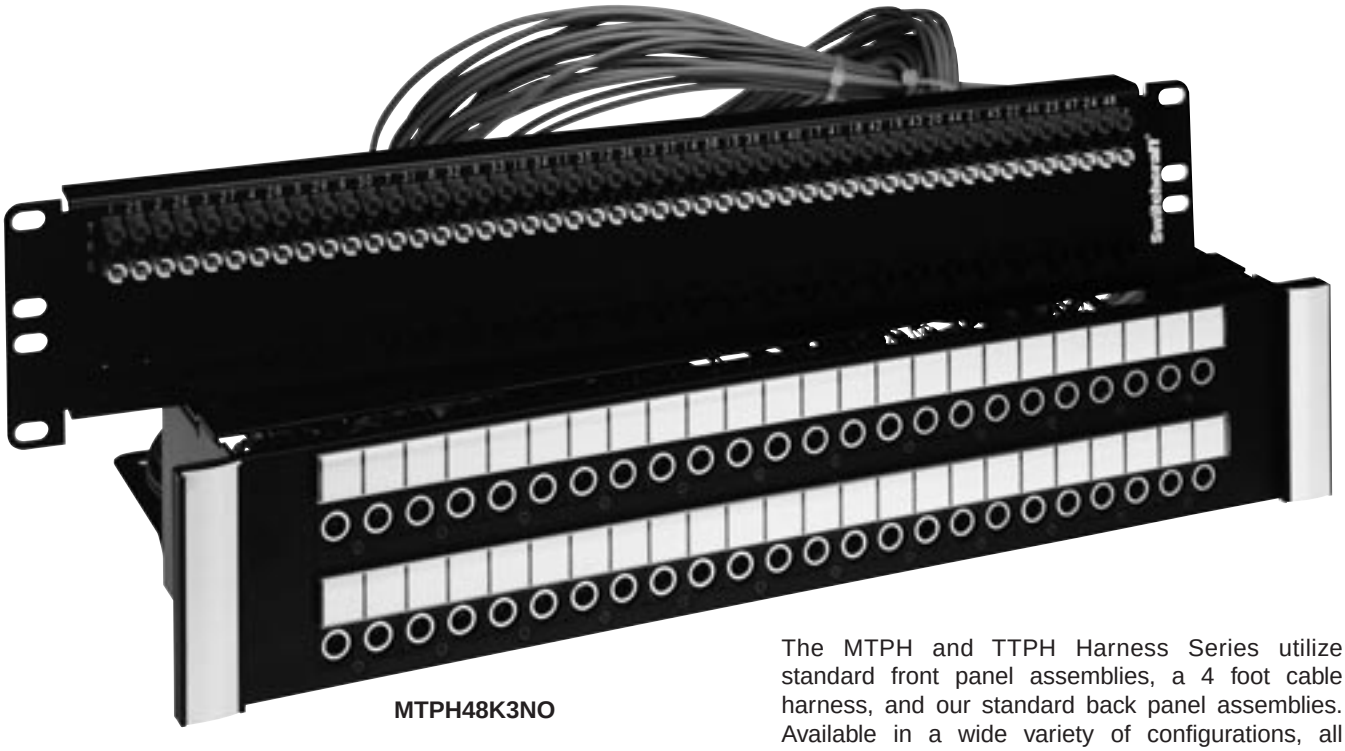

MTPH48K3NO

The MTPH and TTPH Harness Series utilize standard front panel assemblies, a 4 foot cable harness, and our standard back panel assemblies. Available in a wide variety of configurations, all are terminated to our PPT's on the back panel. Primarily used where the back panels must either be mounted into a rack, or brought back to the front for easier access. Custom cable lengths can also be supplied. Contact the factory for details.

FEATURES AND BENEFITS

- Units feature either 48 MT style jacks or 96 TT style jacks on the front panels, to a 4 foot harness, out to a backpanel with PPT's
- All versions utilize AES/EBU wiring for complete digital compatibility
- Attractive, corrosion resistant nickel-plated, steel frame jacks
- Gold-plated switching contacts reduce contact resistance, improve reliability
- Rugged, attractive black epoxy-finished steel frame chassis
- Extra wide designation strips for easy channel identification

SPECIFICATIONS

MATERIALS

JACKS

Frame: Nickel-plated steel
Bushing: Nickel-plated brass
Tip, Ring and Shunt Springs: Nickel silver with welded contacts
Assembly Screws: Zinc-plated steel
Welded Contacts: Gold alloy

PANEL

Front Channel: Black anodized aluminum
Frame: C.R.S. black epoxy painted
Designation Strips: Black polycarbonate 94V-0
Designation Strip Covers: Clear polycarbonate
Jack Inserts: Thermoplastic polyester

MECHANICAL

Life: 30,000 cycles
Insertion Force: 7 lbs. maximum
Withdrawal Force: 1 lb. minimum
Environmental: O°C to +50°C

ELECTRICAL

Contact Resistance: 30 milliohms maximum initial
Insulation Resistance: 10,000 megohms maximum
Dielectric Withstanding Voltage: 500 VAC at 60 Hz
Working Voltage: 140 VDC maximum
Current Rating: 100 milliamps

DIMENSIONS ARE FOR REFERENCE ONLY Inch (mm)

® Registered trademark of Switchcraft, Inc.
Note: Contact your Switchcraft Representative for price and delivery

* Please visit the product pages on our website for the most up-to-date product information

MTPH/TTPH HARNESS AUDIO SERIES (continued)

Ordering Information Part Number	Type of Jack	No. of Jacks	Description
MTPH48K1NS	MT	48	1.75" High front panel, 4' Harness,
			3.5" High back panel, normals strapped
MTPH48K1NO	MT	48	1.75" High front panel, 4' Harness,
			3.5" High back panel, normals brought out
MTPH48K3NS	MT	48	3.5" High front panel, 4' Harness,
			3.5" High back panel, normals strapped
MTPH48K3NO	MT	48	3.5" High front panel, 4' Harness,
			3.5" High back panel, normals brought out
MTPH48K3SNO	MT	48	3.5" High front panel, 4' Harness, 3.5" High back panel, sleeve normals brought out
TTPH96K1NS	TT	96	1.75" High front panel, 4' Harness,
			3.5" High back panel, normals strapped
TTPH96K1NO	TT	96	1.75" High front panel, 4' Harness,
			5.25" High back panel, normals brought out
TTPH96K3NS	TT	96	3.5" High front panel, 4' Harness,
			3.5" High back panel, normals strapped
TTPH96K3NO	TT	96	3.5" High front panel, 4' Harness, 5.25" High back panel, normals brought out

See Page 172 for Mechanical Drawings

DIMENSIONS ARE FOR REFERENCE ONLY Inch (mm)

* Please visit the product pages on our website for the most up-to-date product information

MTPH/TTPH HARNESS AUDIO SERIES (continued)

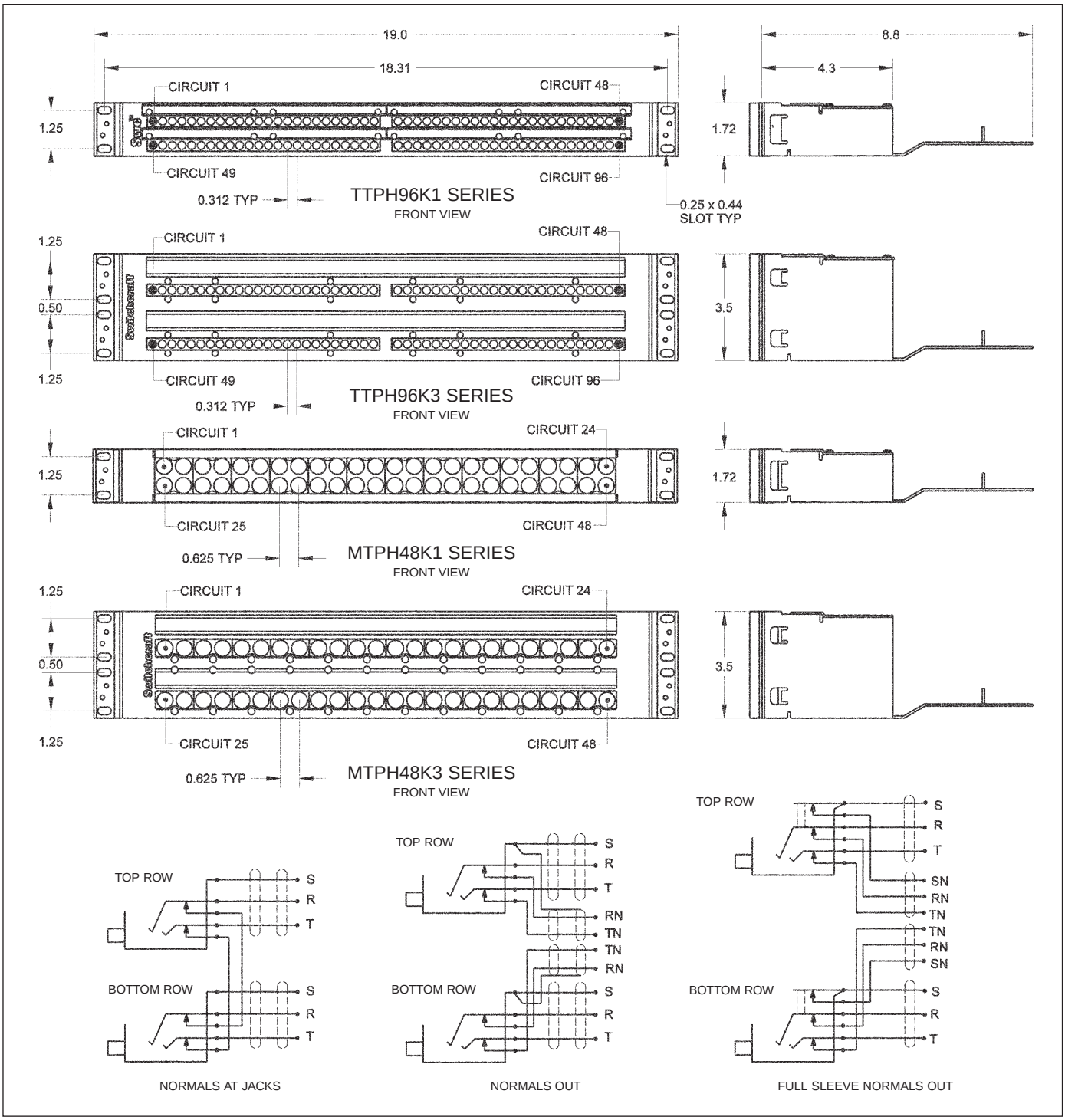

DIMENSIONS ARE FOR REFERENCE ONLY Inch (mm)

® Registered trademark of Switchcraft, Inc.
Note: Contact your Switchcraft Representative for price and delivery

* Please visit the product pages on our website for the most up-to-date product information

MTPH/TTPH HARNESS AUDIO SERIES (continued)

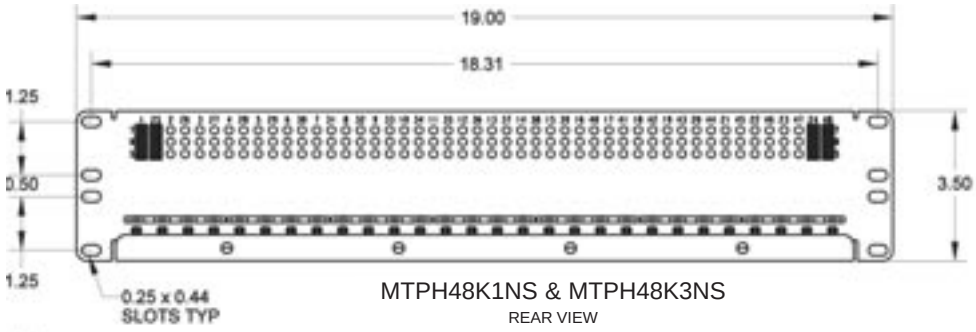

MTPH48K1NS & MTPH48K3NS
REAR VIEW

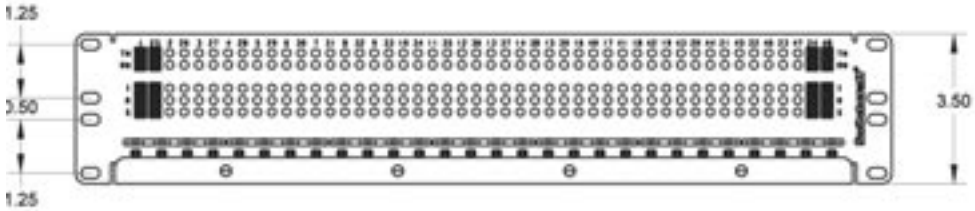

MTPH48K1NO & MTPHK3NO
REAR VIEW

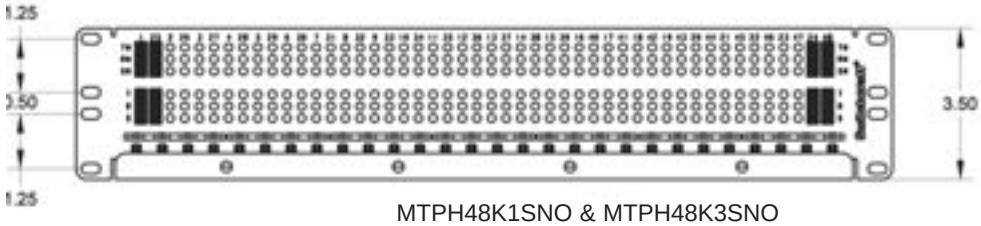

MTPH48K1SNO & MTPH48K3SNO
REAR VIEW

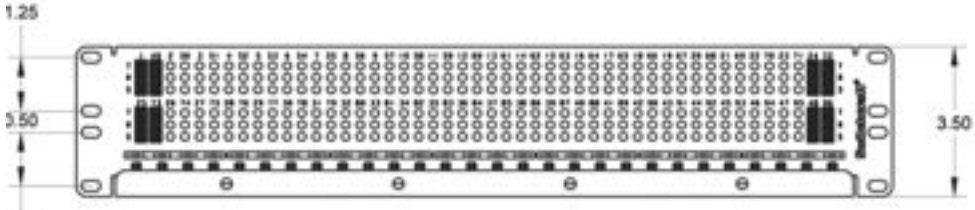

TTPH96K1NS & TTPH96K3NS SERIES
REAR VIEW

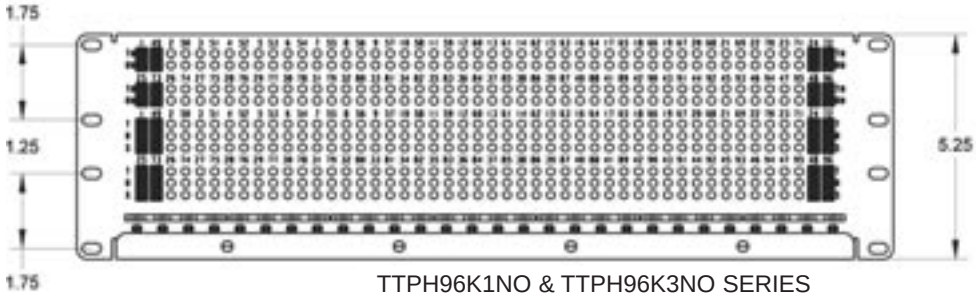

TTPH96K1NO & TTPH96K3NO SERIES
REAR VIEW

DIMENSIONS ARE FOR REFERENCE ONLY Inch (mm)

* Please visit the product pages on our website for the most up-to-date product information

MTPBP/TTPBP BACKPANEL SERIES



MTPH48K3BPNS

The Backpanel Series offers the end user the flexibility of configuring their own patchbay, or to use as a central patchpoint location. The backpanels utilize the PPT punchdown and come with a rugged cable tray.

FEATURES AND BENEFITS

- Allows for custom patchbay configurations or central patching points
- PPTs have IDCs on both sides for easy installation
- Rugged, attractive black epoxy-finished steel chassis
- Cable trays allow for mounting and securing terminated cable

SPECIFICATIONS

Panel thickness: .093"
Mounting hole diameter: .187"
Mounting hole spacing (48 IDCs/row): .340" (Horizontal) x .275" (Vertical)
Mounting hole spacing (52 IDCs/row): .320" (Horizontal) x .275" (Vertical)
Wire size: #22, 24, 26 AWG Stranded or Solid (IDC termination)

MATERIALS

Housing: Thermoplastic (UL 94V-0)
Contacts: High strength copper alloy
Backpanels: Black Epoxy coated C.R.S.
Cable Tray: Black Epoxy coated C.R.S.

Ordering Information

Part Number	Sets of PPT Terminals	Height	Description
MTP48K3BPNS	48	3.5"	T, R, S
MTP48K3PBNO	48	3.5"	T, R, S, TN, RN
MTP52K3BPNO	52	3.5"	T, R, S, TN, RN
MTP24K7	24 x 2	7.0"	+, -, S
TTP96K3BPNS	96	3.5"	T, R, S
TTP96K5BPNS	96 x 2	5.25"	T, R, S, TN, RN

DIMENSIONS ARE FOR REFERENCE ONLY Inch (mm)

® Registered trademark of Switchcraft, Inc.
Note: Contact your Switchcraft Representative for price and delivery

* Please visit the product pages on our website for the most up-to-date product information

MTPBP/TTPBP BACKPANEL SERIES (continued)

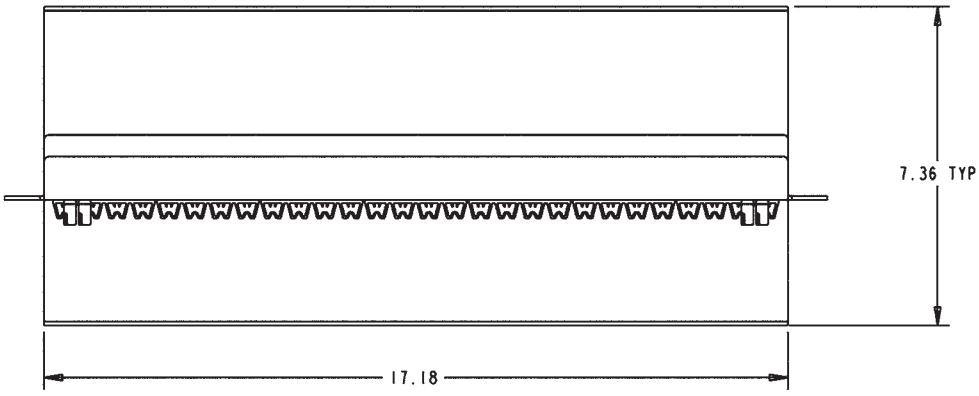

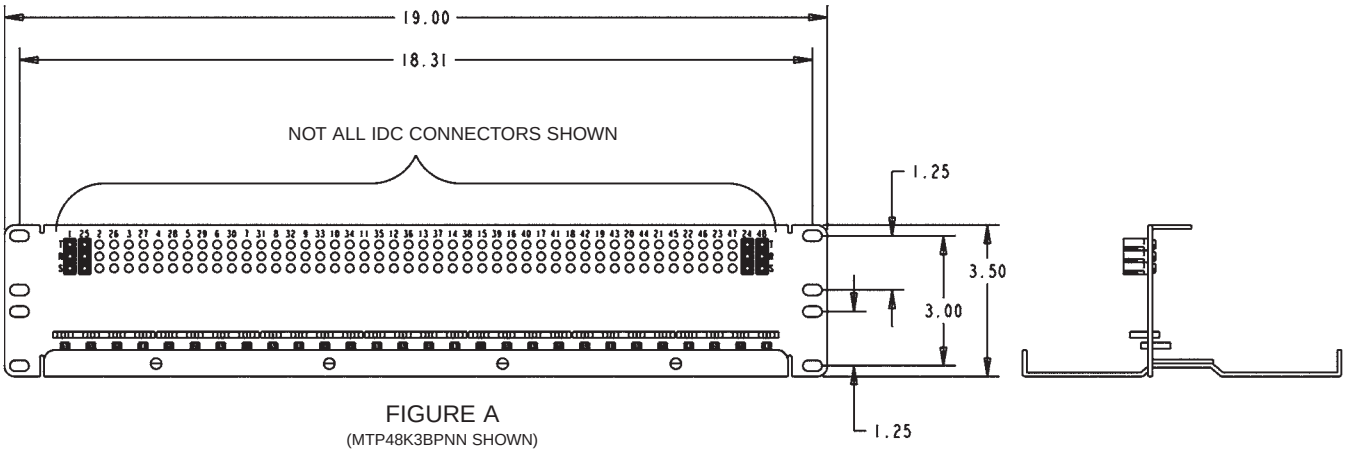

FIGURE A
(MTP48K3BPNN SHOWN)

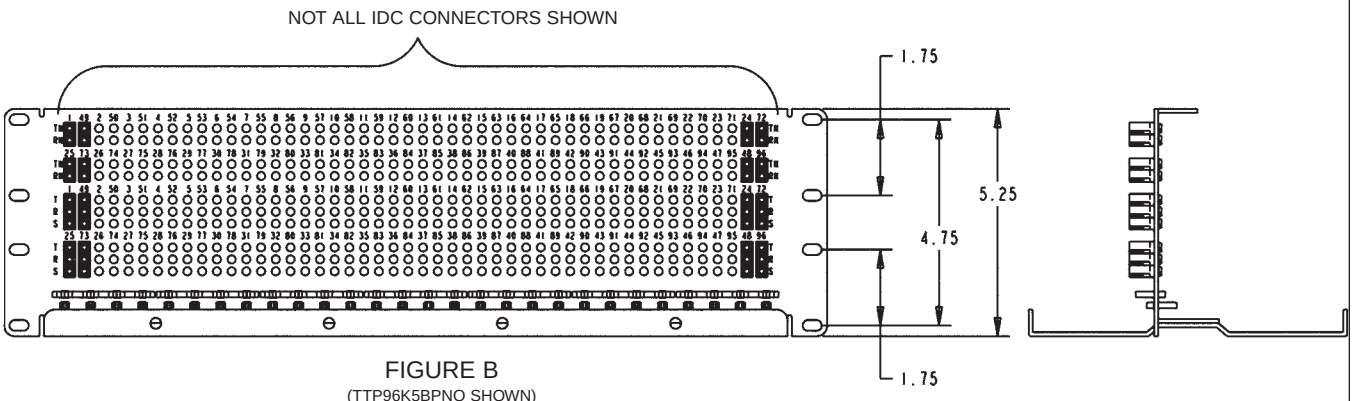

FIGURE B
(TTP96K5BPNO SHOWN)

DIMENSIONS ARE FOR REFERENCE ONLY Inch (mm)

* Please visit the product pages on our website for the most up-to-date product information

EZ NORM PATCHBAY SERIES

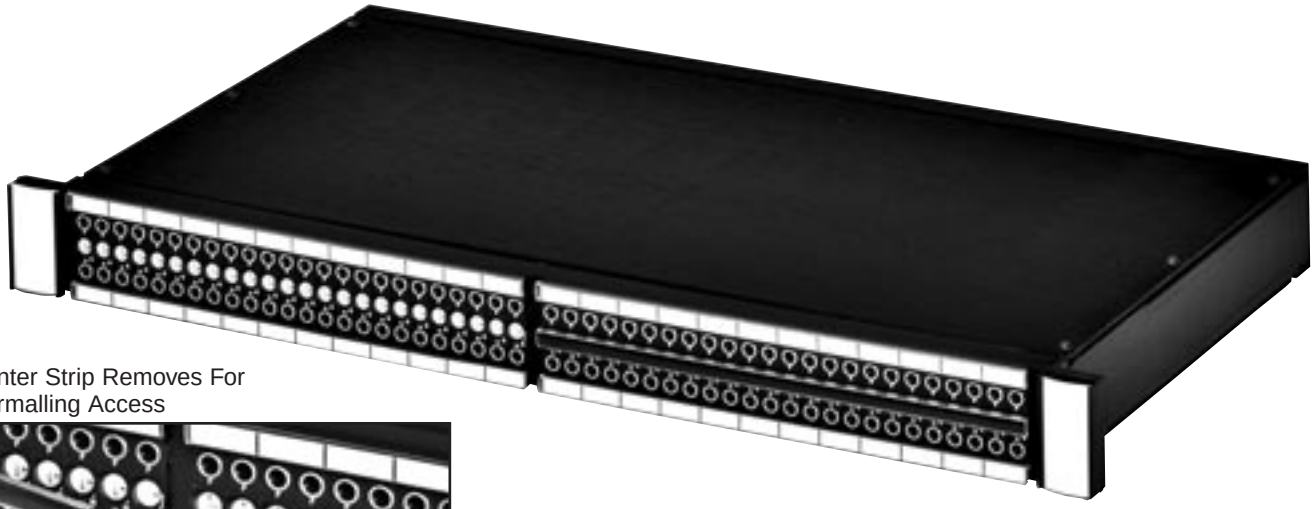

Center Strip Removes For Normalling Access



Easily Normal The Jacks By Rotating To "Full", "Non", Or "Half" Positions

The EZ Norm offers a simplified method for setting up and changing normals to a Bantam/TT patchbay. Simply remove the middle designation strip, and rotate the center cam, using a standard screwdriver. An audible"click" can be heard as you rotate from full normals to no normals to half normals. An opaque marking strip is included to conceal the normal position, if needed.

EZ NORM JACK SPECIFICATIONS

MATERIALS:
Housing & Cover: 94V-0 rated thermoplastic
Sleeve Collar: Nickel plated copper alloy
Tip, Ring, Shunt, & Sleeve Springs: Nickel Silver with welded contacts
Welded Contacts: Gold
Cam Switching Springs: Silver plated copper alloy
Cam Switching Contacts: Silver plated copper alloy

MECHANICAL
Jack Mechanical Life: 30,000 cycles
Cam Contact Mechanical Life: 30,000 cycles
Insertion - Withdrawal Forces: 1 - 4 lbs.
Moisture resistance: MIL-STD 202 Method 106
Thermal shock: MIL-STD 202 Method 107
Salt spray: MIL-STD Method 101 (48 hrs.)
Vibration: MIL-STD 202 Method 213

ELECTRICAL:
Jack Spring Contact Resistance: 30 milliohm Maximum
Cam Switch Contact Resistance: 30 milliohm Maximum
Insulation Resistance: 10,000 Megaohms
Dielectric Withstanding Voltage:
500 VAC (rms) at 60 Hz
Insertion Loss: -0.5dB up to 10 MHz

EZ NORM PATCHBAY OPTIONS

- 1RU can be terminated to EDAC or Cannon DL, solder terminals, or wire-wrap terminals
- 1.5RU can be terminated to EDAC/Cannon DL, solder terminals, wire-wrap terminals, plus 3 pin connectors, or our own PPT Professional Punchdown Terminal
- 2RU Same as above
- All units will be offered with or w/o docking connector
- Unwired units will be offered with either cable tie bar or cable tray

DIMENSIONS ARE FOR REFERENCE ONLY Inch (mm)

® Registered trademark of Switchcraft, Inc.
Note: Contact your Switchcraft Representative for price and delivery

* Please visit the product pages on our website for the most up-to-date product information

EZ NORM PATCHBAY SERIES (continued)

Racks

The EZ Norm comes in 3 different rack heights, 1RU, 1.5RU, and 2 RU.

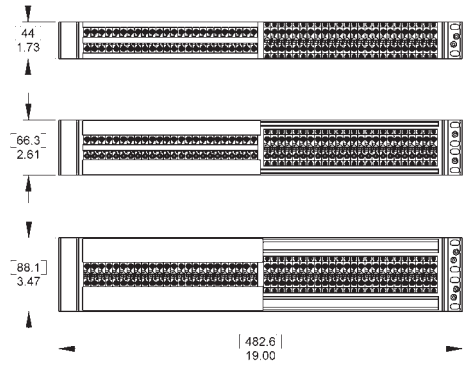

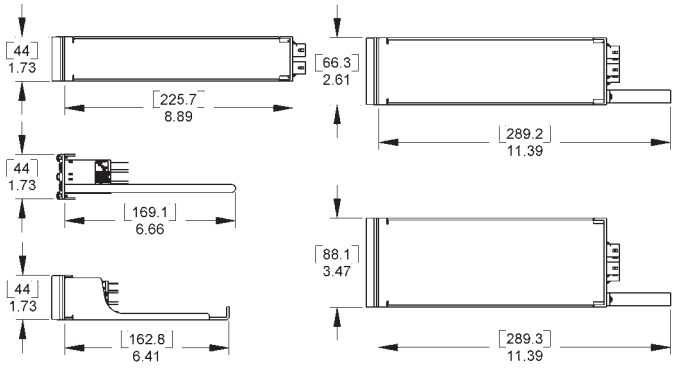

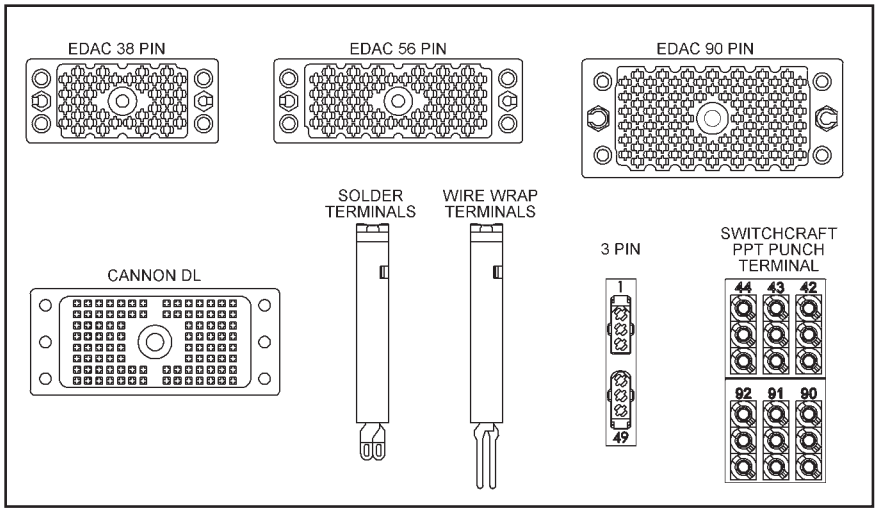

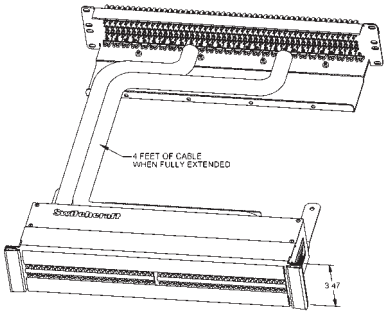

Harness Assembly

The EZ Norm is also offered as a harness assembly, with a standard harness of 4 ft. Custom lengths are available, call Switchcraft® for details.

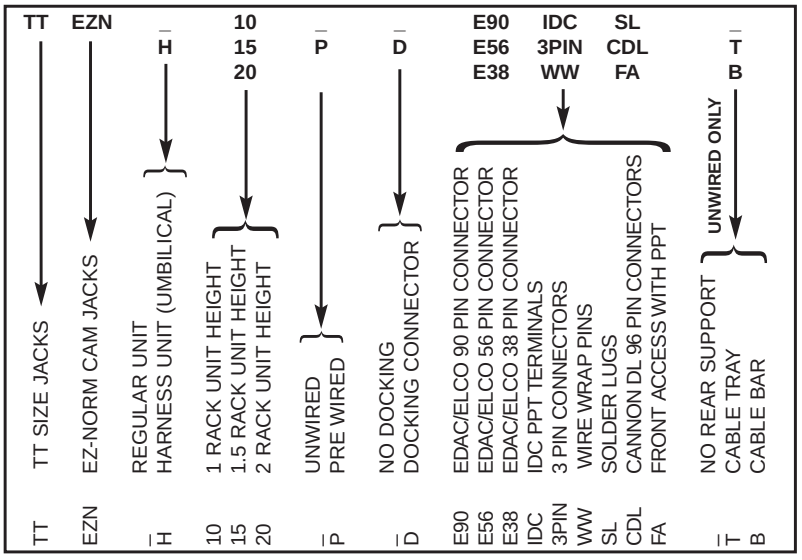

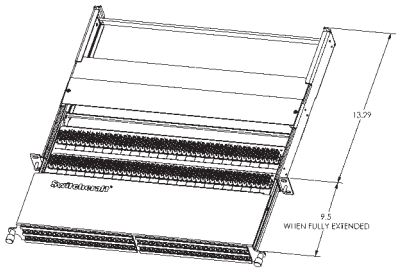

Front Access

The Front Access option offers a slide-out tray, allowing the end user to re-terminate the patchbay from the front of the rack.

DIMENSIONS ARE FOR REFERENCE ONLY Inch (mm)

* Please visit the product pages on our website for the most up-to-date product information

TT96 EDAC SERIES

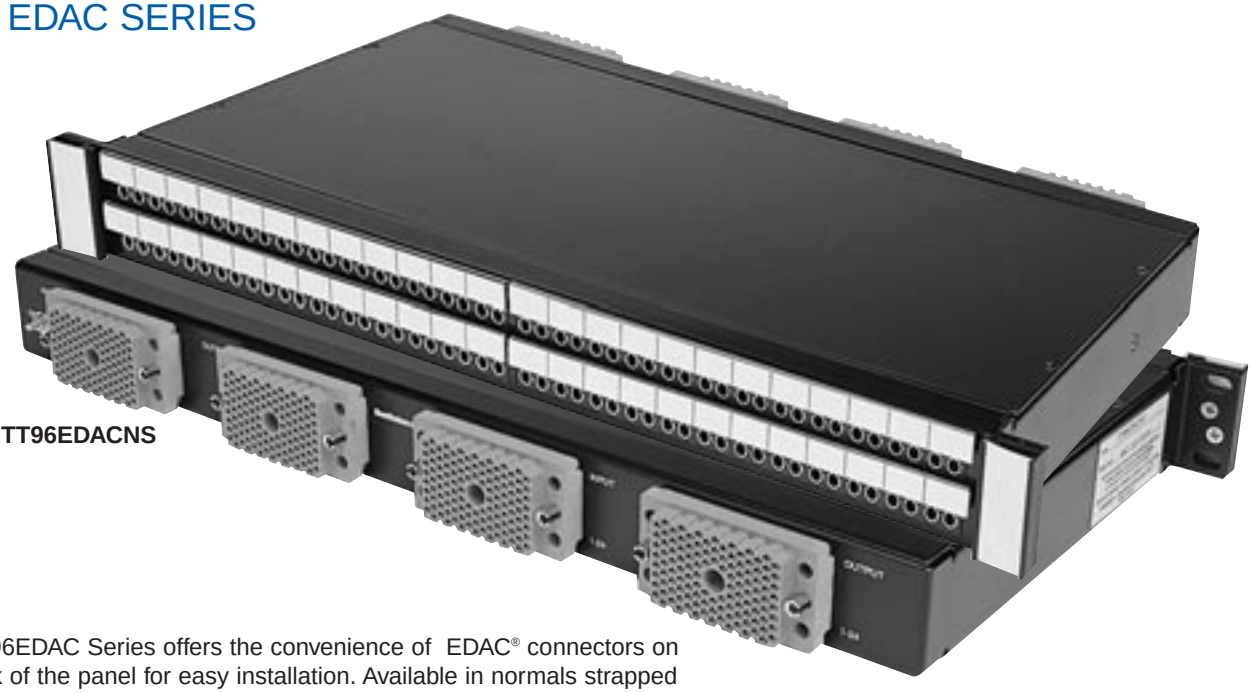

TT96EDACNS

The TT96EDAC Series offers the convenience of EDAC® connectors on the back of the panel for easy installation. Available in normals strapped and normals brought out, both wired to the SAC code of wiring. We also offer custom wiring configurations. Contact the factory for details.

FEATURES AND BENEFITS

- Attractive, corrosion-resistant, nickel-plated jacks
- Steel frame jacks for superior jack life
- Extra wide labeling strips provide maximum space and two vertical strips, one at each side
- Rugged, attractive black anodized aluminum face will not break
- Two configurations available:
- Normals brought out
- Normalled at jacks
- Gold switching contacts for long-term reliability
- Jacks paired for easy identification of left and right channels
- Connectorized by EDAC® connectors for ease of termination by customer

SPECIFICATIONS

MATERIALS

JACKS

Frame: Nickel-plated steel
Bushing: Nickel-plated brass
Tip, Ring and Shunt Springs: Nickel silver with welded contacts
Assembly Screws: Zinc-plated steel
Welded Contacts: Gold alloy

PANEL

Front Channel: Black anodized aluminum
Frame & Cover: C.R.S. black epoxy painted
Designation Strips: Black polycarbonate 94V-0
Designation Strip Covers: Clear polycarbonate
Jack Inserts: Polyester

EDAC CONNECTOR

Housing: Thermoplastic, UL94V-0
Contacts: Gold plated phosphor bronze

MECHANICAL

Life: 30,000 cycles
Insertion Force: 7 lbs. maximum
Withdrawal Force: 1 lb. minimum
Operating: -20°C to +65°C

ELECTRICAL

Contact Resistance: 30 milliohms maximum initial
Insulation Resistance:10,000 megohms
Dielectric Withstanding Voltage: 500VAC at 60 Hz
Working Voltage: 140VDC
Current Rating: 100 milliamps

EDAC Mating Plugs

Part Number	Description
516-090-000-301	90 Pin male w/screw
516-090-000-302	90 Pin male w/nut
516-120-000-101	120 Pin male w/screw
516-120-000-102	120 Pin male w/nut
516-290-500	Terminal solder-style
516-290-590	Terminal crimp-style

Ordering Information

Part Number	Type of Jack	No. of Jacks	Description
TT96EDACNO	TT	96	Normals Brought Out (120 pin EDAC)
TT96EDACNS	TT	96	Normals Strapped (90 pin EDAC)

DIMENSIONS ARE FOR REFERENCE ONLY Inch (mm)

® Registered trademark of Switchcraft, Inc.
Note: Contact your Switchcraft Representative for price and delivery

* Please visit the product pages on our website for the most up-to-date product information

TT96 EDAC SERIES (continued)

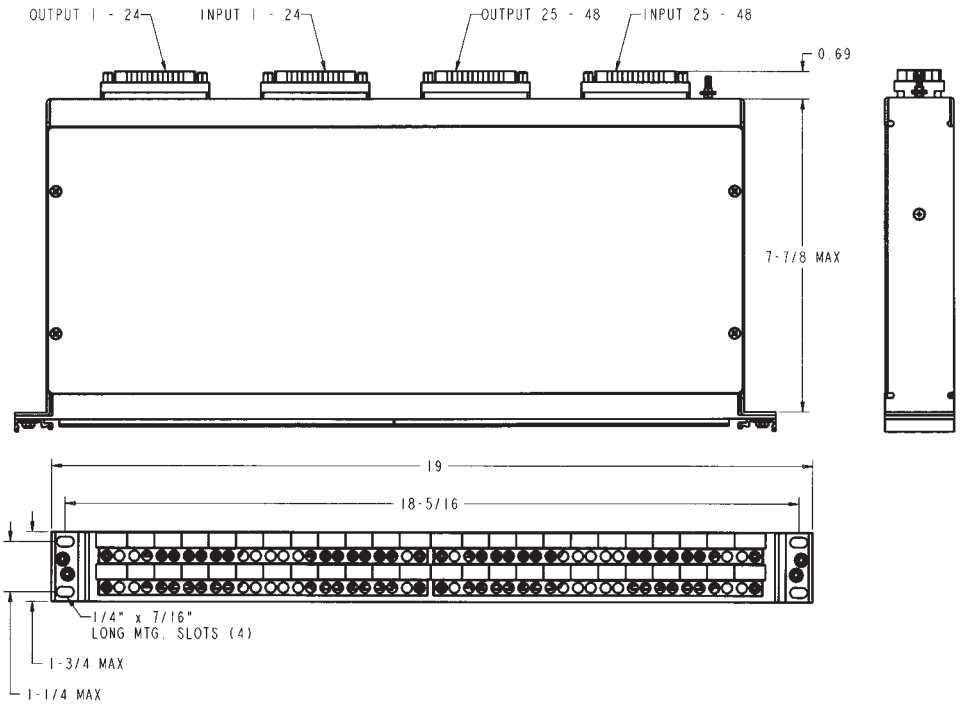

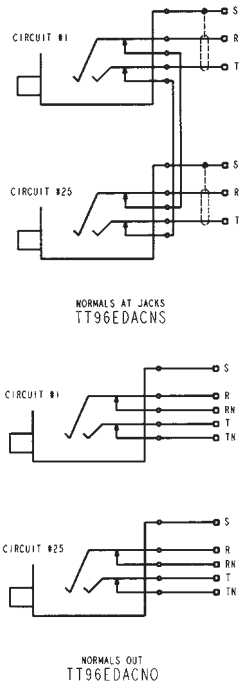

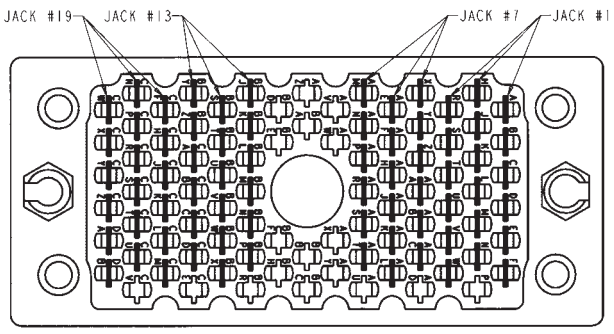

Standard Audio Configuration Wiring (S.A.C.)
90 Pin Plug Connector
(Normals at jacks)

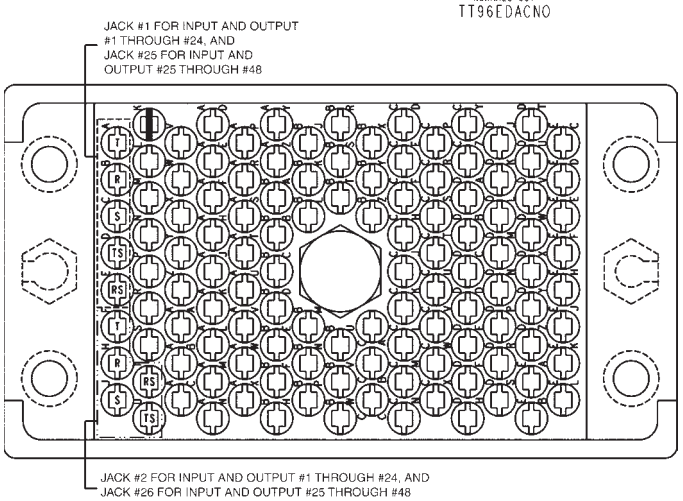

Standard Audio Configuration Wiring (S.A.C.)
120 Pin Plug Connector
(Normals brought out)

90 PIN CONNECTOR PIN-OUT			
JACK No.	TIP	RING	SLEEVE
1	A	H	R
JACKS #2 THRU #6 PATTERN CONTINUES TO F,N,W			
7	X	AE	AM
JACKS #8 THRU #12 PATTERN CONTINUES TO AC,AL,AT			
13	BJ	BS	BY
JACKS #14 THRU #18 PATTERN CONTINUES TO BP,BX,CD			
19	CF	CN	CW
JACKS #20 THRU #24 PATTERN CONTINUES TO CM,CU,DB			

120 PIN CONNECTOR PIN-OUT					
JACK No.	TIP	RING	SLEEVE	TIP SHUNT	RING SHUNT
1	A	B	C	D	E
JACKS #2 THRU #6 PATTERN CONTINUES TO AN, AM, AL, AK, AJ					
7	AH	AF	AE	AD	AP
JACKS #8 THRU #12 PATTERN CONTINUES TO BN, BP, BW, BV, BU					
13	BT	BS	BR	BX	BY
JACKS #14 THRU #18 PATTERN CONTINUES TO CX, DH, DF, DE, DD					
19	DC	DB	DA	CZ	CY
JACKS #20 THRU #24 PATTERN CONTINUES TO EF, EH, EJ, EK, EL					

DIMENSIONS ARE FOR REFERENCE ONLY $\frac{\text{Inch}}{(\text{mm})}$

* Please visit the product pages on our website for the most up-to-date product information

TTP96K PATCHKIT SERIES

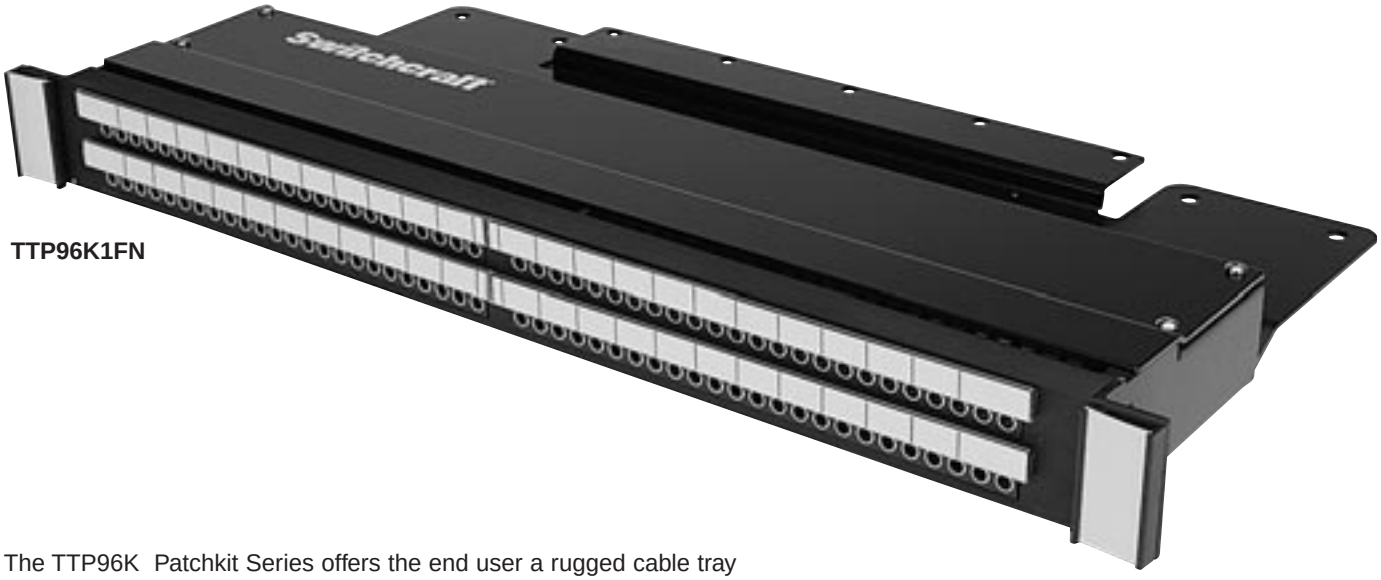

TTP96K1FN

The TTP96K Patchkit Series offers the end user a rugged cable tray to support rear cabling. Heavy duty construction takes weight off the back of the jacks for increased reliability. Available in 1.75" or 3.5" height versions.

FEATURES AND BENEFITS

- Kit features 96 TT jacks in one rack space (1.75" high) or two rack spaces (3.5" high)
- Jack blocks can be removed from the front for easy soldering
- Dust tray limits dirt, dust and contamination of jack terminals
- Wire management straps are adjustable and reusable
- Attractive, corrosion resistant nickel-plated jacks
- Steel frame jack for superior jack life
- Extra wide labeling strips provide maximum space
- Rugged, attractive black anodized aluminum face will not break or rust
- Three jack configurations available for the exact switching arrangement you need: full normal, half normal, and non-normal (open circuit)
- Fanned solder terminals for easier solder connections
- Gold switching contacts for long-term reliability in normal-through connections

SPECIFICATIONS

MATERIALS

JACKS

Frame: Nickel-plated steel
Bushing: Nickel-plated brass
Tip, Ring and Shunt Springs: Nickel silver with welded contacts
Assembly Screws: Nickel-plated steel
Welded Contacts: Gold alloy

PANEL

Front Channel: Black anodized aluminum
Frame: C.R.S. black epoxy painted
Designation Strips: Black polycarbonate 94V-0
Designation Strip Covers: Clear polycarbonate
Jack Inserts: Thermoplastic polyester

MECHANICAL

Life: 30,000 cycles
Insertion Force: 7 lbs. maximum
Withdrawal Force: 1 lb. minimum
Environmental: 0°C to +50°C

ELECTRICAL

Contact Resistance: 30 milliohms maximum initial
Insulation Resistance: 10,000 megohms maximum
Dielectric Withstanding Voltage: 500VAC at 60 Hz
Working Voltage: 140VDC maximum
Current Rating: 100 milliamps

Ordering Information

Part Number	Type of Jack	No. of Jacks	Description
TTP96K1FN	TT	96	1.75" High, full normals
TTP96K1HN	TT	96	1.75" High, half normal
TTP96K1NN	TT	96	1.75" High, no normals
TTP96K3FN	TT	96	3.5" High, full normals
TTP96K3HN	TT	96	3.5" High, half normals
TTP96K3NN	TT	96	3.5" High, no normals

DIMENSIONS ARE FOR REFERENCE ONLY Inch (mm)

® Registered trademark of Switchcraft, Inc.
Note: Contact your Switchcraft Representative for price and delivery

* Please visit the product pages on our website for the most up-to-date product information

TTP96K PATCHKIT SERIES (continued)

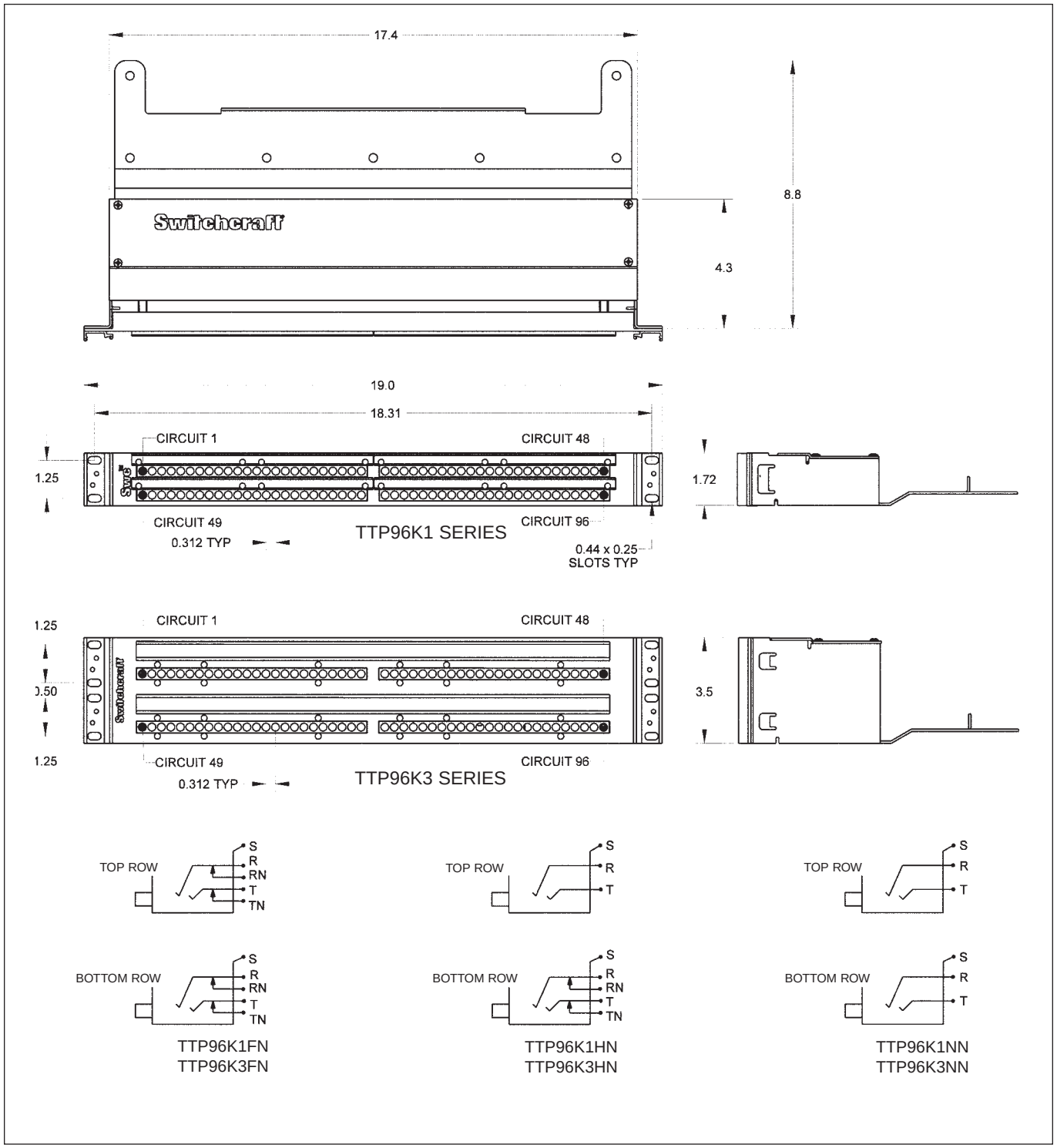

DIMENSIONS ARE FOR REFERENCE ONLY Inch (mm)

* Please visit the product pages on our website for the most up-to-date product information

MT48K/MT52K PATCHKIT SERIES

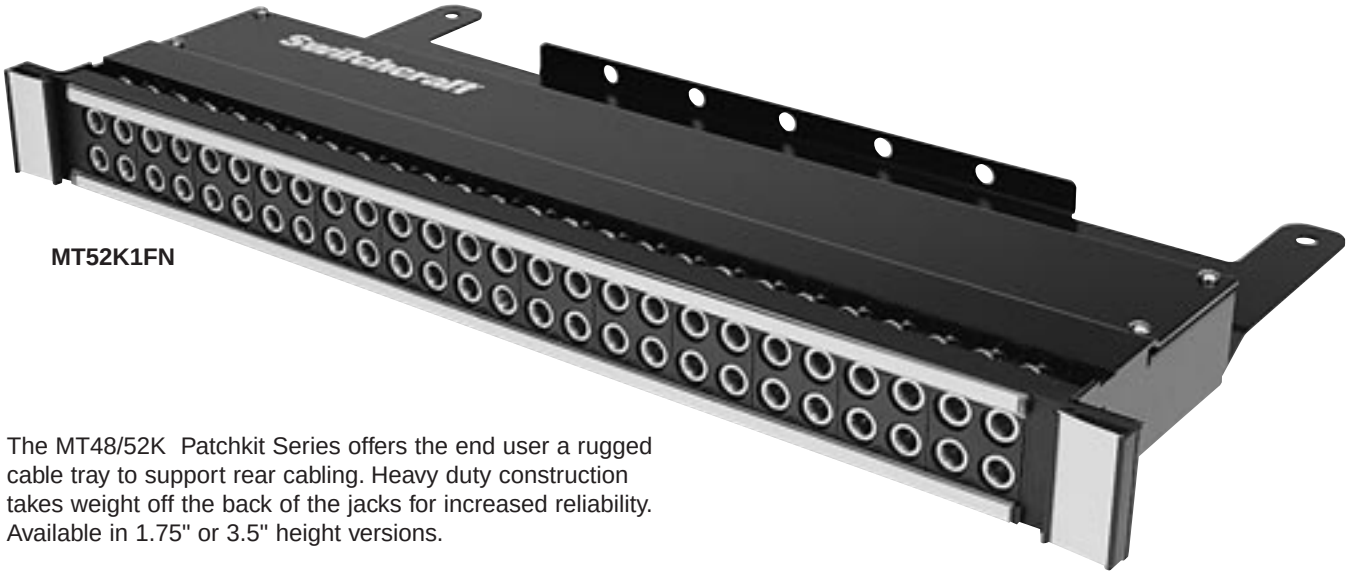

MT52K1FN

The MT48/52K Patchkit Series offers the end user a rugged cable tray to support rear cabling. Heavy duty construction takes weight off the back of the jacks for increased reliability. Available in 1.75" or 3.5" height versions.

FEATURES AND BENEFITS

- Kit features 48 1/4" longframe jacks in one rack space (1.75" high) or in two rack spaces (3.5" high) or 52 1/4" longframe jacks in one rack space (1.75" high)
- Allows user to add cable and termination panel
- Removable jack panel from the front allows easy soldering of wire connections
- Jacks have gold switching contacts
- Fanned solder terminals for easier soldering
- Offset ground lugs allow easy bussing of ground with one wire
- Jacks have a nickel-plated frame and assembly screws
- Wire management straps are reusable and adjustable

SPECIFICATIONS

MATERIALS

JACKS

Frame: Stamped nickel-plated steel
Bushing: Nickel-plated brass
Tip, Ring and Shunt Springs: Nickel silver with welded contacts
Assembly Screws: Nickel-plated steel
Welded Contacts: Gold alloy

PANEL

Front Panel: Thermoplastic
Frame: C.R.S. black epoxy paint
Designation Strips: Black polycarbonate 94V-0
Designation Strip Covers: Clear polycarbonate

MECHANICAL

Life: 30,000 cycles
Insertion Force: 7 lbs. maximum
Withdrawal Force: 1 lb. minimum
Operating: 0°C to +50°C

ELECTRICAL

Contact Resistance: 30 milliohms maximum initial
Insulation Resistance: 10,000 megohms maximum
Dielectric Withstanding Voltage: 500VAC at 60 Hz
Working Voltage: 140VDC maximum
Current Rating: 100 milliamps

Ordering Information

Part Number	Type of Jack	No. of Jacks	Height	Description
MT48K1NS	MT	48	1.75"	Normals strapped
MT48K1FN	MT	48	1.75"	Full normals
MT48K1HN	MT	48	1.75"	Half normals
MT48K1NN	MT	48	1.75"	No normals
MT52K1NS	MT	52	1.75"	Normals strapped
MT52K1FN	MT	52	1.75"	Full normals
MT52K1HN	MT	52	1.75"	Half normals
MT52K1NN	MT	52	1.75"	No normals
MT48K3FN	MT	48	3.5"	Full normals
MT48K3HN	MT	48	3.5"	Half normals
MT48K3NN	MT	48	3.5"	No normals
MT52K3FN	MT	52	3.5"	Full normals
MT52K3HN	MT	52	3.5"	Half normals
MT52K3NN	MT	52	3.5"	No normals

DIMENSIONS ARE FOR REFERENCE ONLY Inch (mm)

® Registered trademark of Switchcraft, Inc.
Note: Contact your Switchcraft Representative for price and delivery

* Please visit the product pages on our website for the most up-to-date product information

MT48K/MT52K PATCHKIT SERIES (continued)

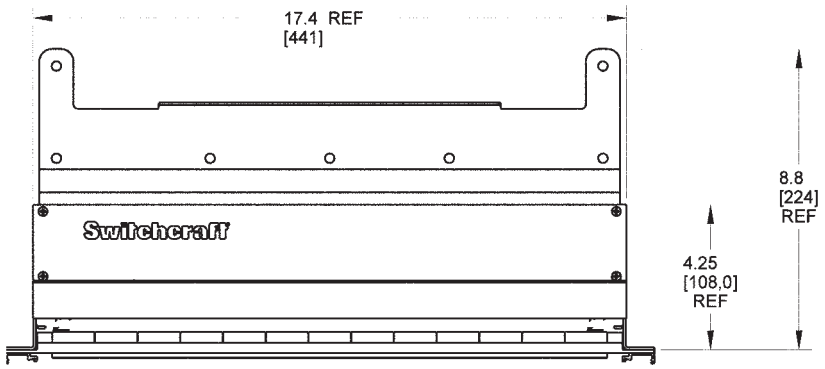

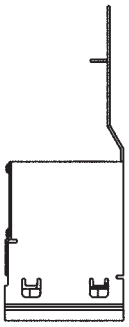

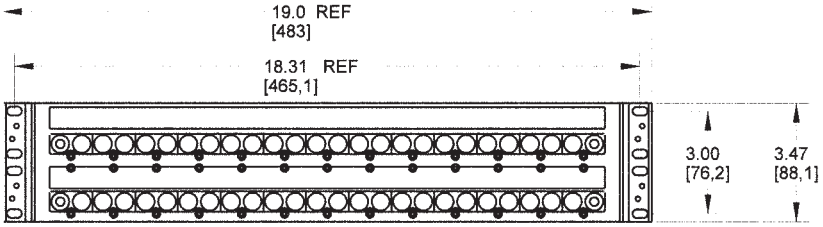

MT52K3 SERIES

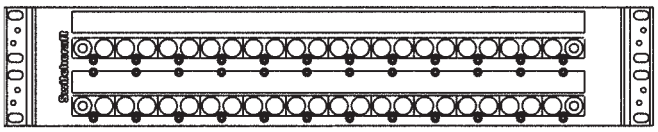

MT48K3 SERIES

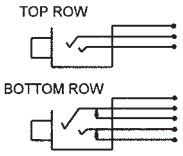

HALF NORMAL

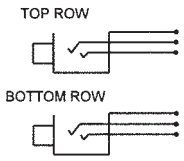

NO NORMALS

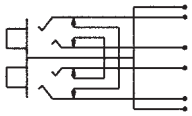

NORMALS STRAPPED
(K1 SERIES ONLY)

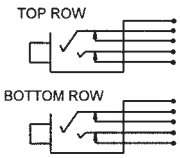

FULL NORMAL

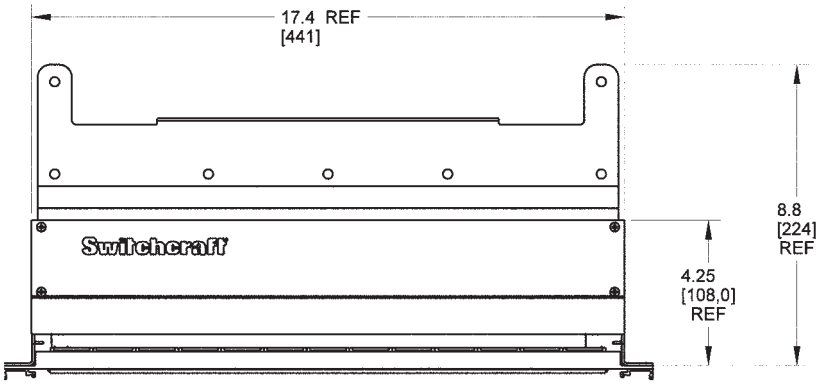

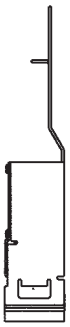

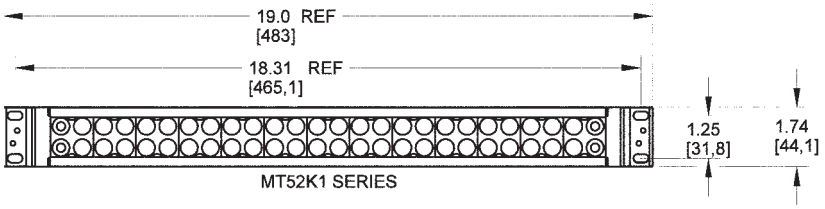

MT52K1 SERIES

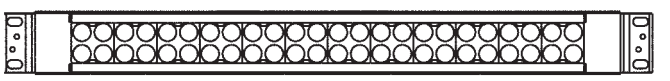

MT48K1 SERIES

DIMENSIONS ARE FOR REFERENCE ONLY Inch (mm)

* Please visit the product pages on our website for the most up-to-date product information

MT48/MT52 PATCHBAY SERIES

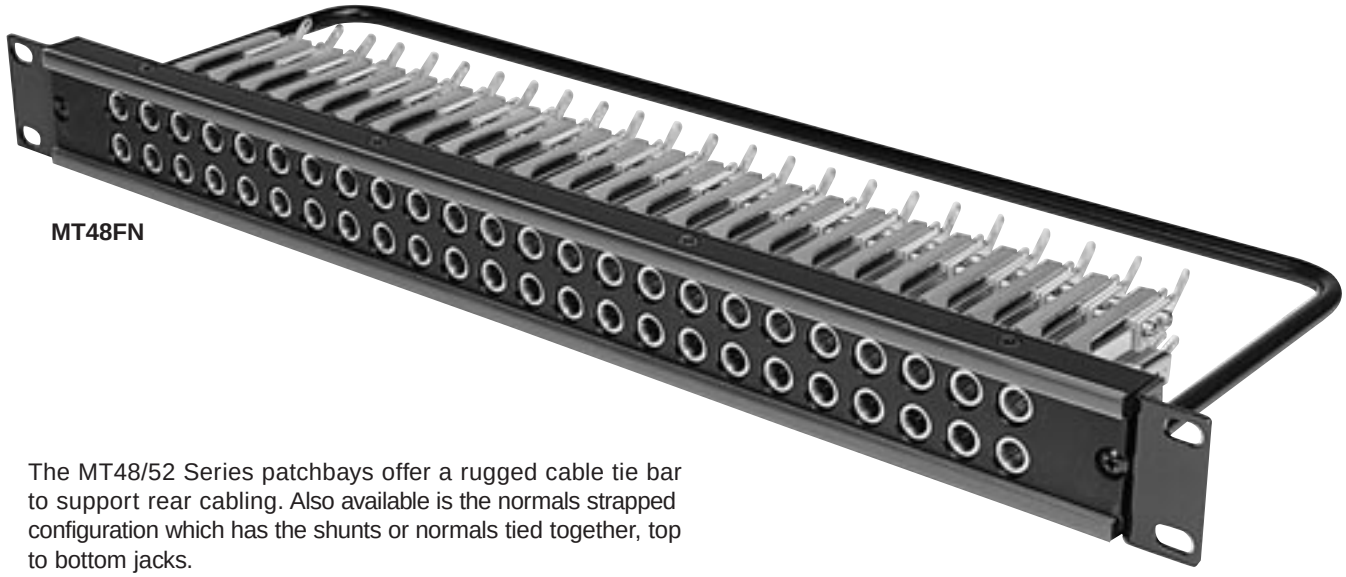

MT48FN

The MT48/52 Series patchbays offer a rugged cable tie bar to support rear cabling. Also available is the normals strapped configuration which has the shunts or normals tied together, top to bottom jacks.

FEATURES AND BENEFITS

- Units feature either 48 or 52 MT Jax®
- Steel frame jacks for superior jack life
- Attractive, corrosion resistant nickel-plated jacks
- Gold switching contacts for long-term reliability in normal-through connections
- Offset ground terminal for ease in making common ground buss connections
- Fanned solder terminals for easier solder connections
- Cable tie bar takes the weight of cables off the jacks
- Four jack configurations available for the exact switching arrangement: full normal, half normal, non-normal, and normals strapped

SPECIFICATIONS

MATERIALS

JACKS

Frame: Steel, nickel-plated
Bushing: Brass, nickel-plated
Springs: Nickel silver, solder lugs
Ground Terminal: Nickel silver, solder lugs
Switching Contacts: Welded, gold alloy
Insulation: Phenolic spacers, rigid PVC tubing through stack
Screws: Steel, nickel-plated

PANEL

Jack Panel: Thermoplastic
Cable Support Bracket: 5/16" diameter black epoxy painted steel rod
Screws (designation strip): Steel, black zinc-plated
Screws (mounting jack): Steel, nickel plated
Kwik-change® Designation Strip: Extruded aluminum, black anodized
Marking Strip:
White plastic, matte finish
Marking Strip Cover:
Clear, extruded plastic

MECHANICAL

Life: 30,000 cycles
Insertion Force: 7 lbs. maximum
Withdrawal Force: 1 lb. minimum
Operating: 0˚C to +50˚C

ELECTRICAL

Contact Resistance: 30 milliohms maximum initial
Insulation Resistance: 10,000 megohms maximum
Dielectric Withstanding Voltage: 500VAC at 60 Hz
Working Voltage: 140VDC maximum
Current Rating: 100 milliamps

Ordering Information

Part Number	Type of Jack	No. of Jacks	Description
MT48FN	MT	48	Full normals
MT48HN	MT	48	Half normals
MT48NN	MT	48	No normals
MT48NS	MT	48	Normals strapped
MT52FN	MT	52	Full normals
MT52HN	MT	52	Half normals
MT52NN	MT	52	No normals
MT52NS	MT	52	Normals strapped

DIMENSIONS ARE FOR REFERENCE ONLY Inch (mm)

® Registered trademark of Switchcraft, Inc.
Note: Contact your Switchcraft Representative for price and delivery

* Please visit the product pages on our website for the most up-to-date product information

MT48/MT52 PATCHBAY SERIES (continued)

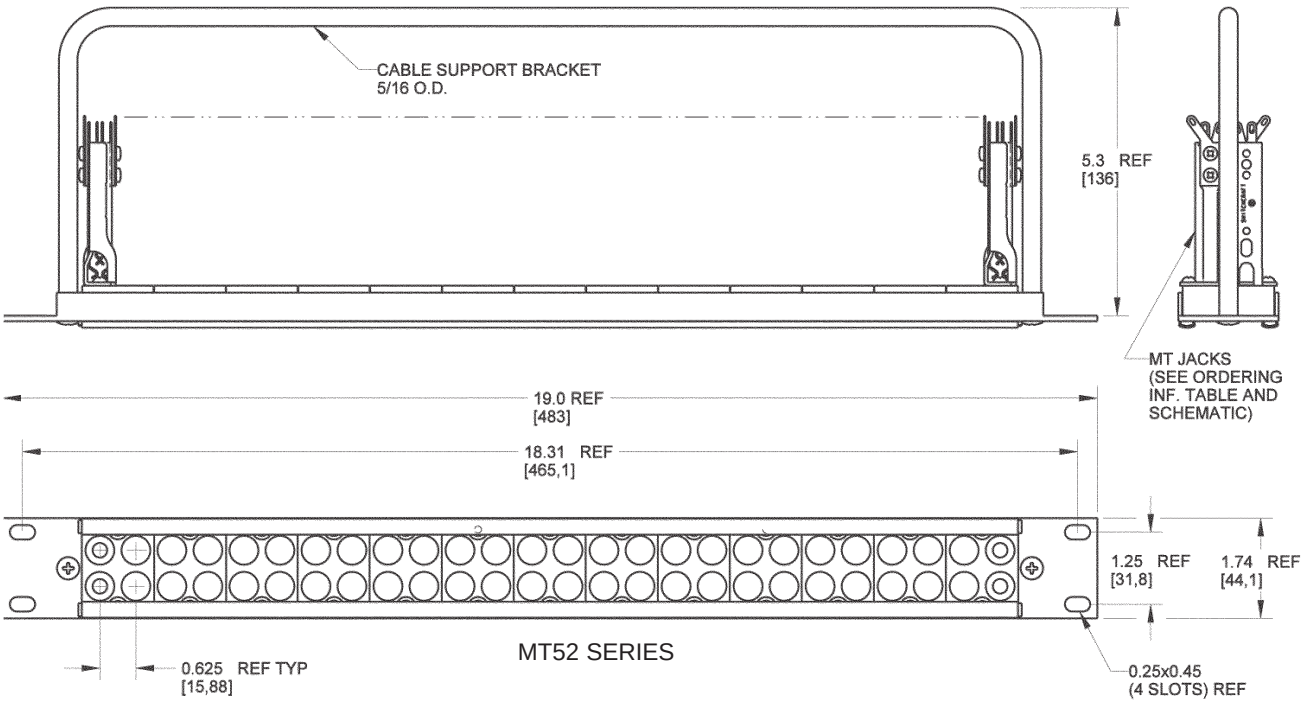

MT52 SERIES

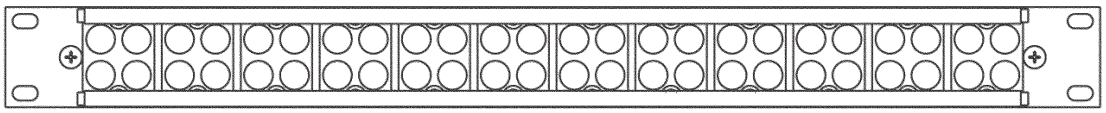

MT48 SERIES

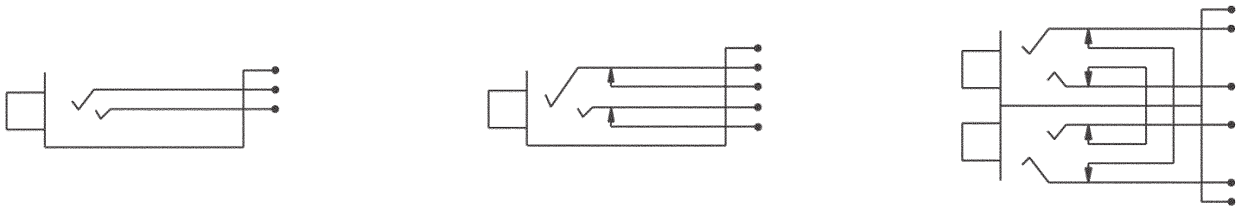

YMT332BN YMT334BN YMT389N

JACK SCHEMATICS

"N" SUFFIX DENOTES WELDED GOLD CONTACTS
AND NICKEL-PLATED FRAME

DIMENSIONS ARE FOR REFERENCE ONLY Inch (mm)

* Please visit the product pages on our website for the most up-to-date product information

TTP96AS PATCHBAY SERIES

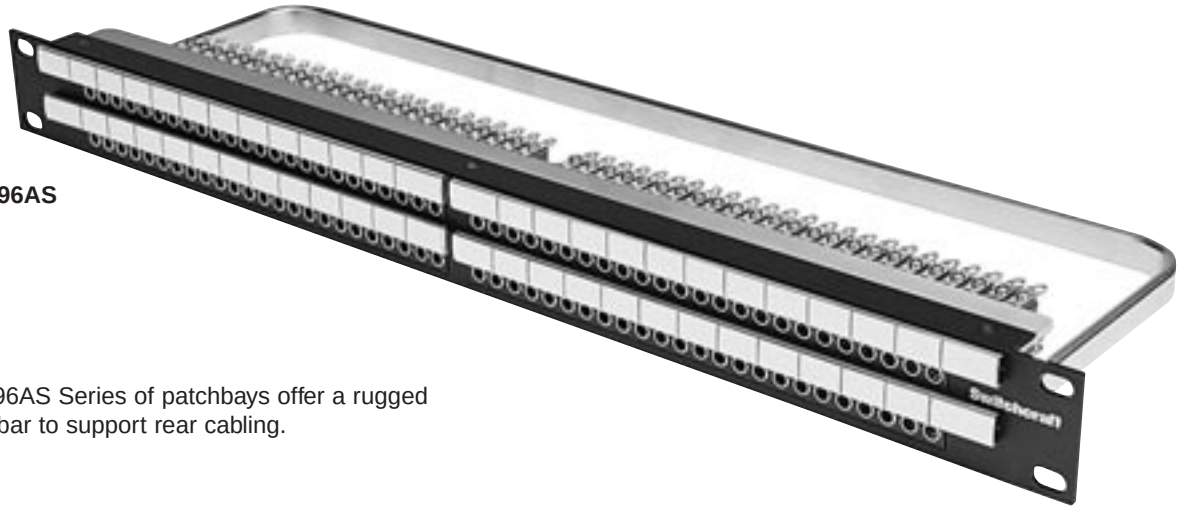

TTP96AS

The TTP96AS Series of patchbays offer a rugged cable tie bar to support rear cabling.

FEATURES AND BENEFITS

- Unit features 96 TT jacks
- Attractive, corrosion resistant nickel-plated jacks
- Steel frame jack for superior jack life
- Extra wide labeling strips provide maximum space
- Rugged cable tie bar takes the weight of cables off the jacks
- Rugged, attractive black anodized aluminum face will not break
- Three jack configurations available for the exact switching arrangement you need: full normal, half normal, and open circuit panel
- Fanned solder terminals for easier solder connections
- Offset ground terminal for ease in making common ground buss connections
- Gold switching contacts for long-term reliability in normal-through connections

SPECIFICATIONS

MATERIALS

JACKS

Frame: Steel, nickel-plated
Bushing: Nickel-plated copper alloy
Springs: Copper alloy solder lugs
Ground Terminal: Steel, tin electrodeposited
Switching Contacts: Welded, gold alloy inlay over palladium base
Insulation: Rigid plastic spacers, rigid PVC tubing through stack
Screws: Steel, plated

PANEL

Frame: Black anodized aluminum
Inserts: Polyester, glass filled, 94V-0
Cable Support Bar: Cold rolled steel, nickel-plated
Designation Strips: Thermoplastic, 94V-0
Designation Strip Covers: Clear thermoplastic, SE-1
Marking Strip: Rigid vinylite
Jack Mounting Screws: Steel, plated
Screws: Steel, black plated

MECHANICAL

Life: 30,000 cycles
Insertion Force: 7 lbs. maximum
Withdrawal Force: 1 lbs. minimum
Environmental: 0°C to +50°C

ELECTRICAL

Contact Resistance: 30 milliohms maximum initial
Insulation Resistance: 10,000 megohms maximum
Dielectric Withstanding Voltage: 500VAC at 60 Hz
Working Voltage: 140VDC maximum
Current Rating: 100 milliamps

Ordering Information

Part Number	Type of Jack	No. of Jacks	Description
TTP96ASFN	TT	96	Full normals
TTP96ASHN	TT	96	Half normals
TTP96ASNN	TT	96	No normals

DIMENSIONS ARE FOR REFERENCE ONLY Inch (mm)

® Registered trademark of Switchcraft, Inc.
Note: Contact your Switchcraft Representative for price and delivery

* Please visit the product pages on our website for the most up-to-date product information

TTP96AS PATCHBAY SERIES (continued)

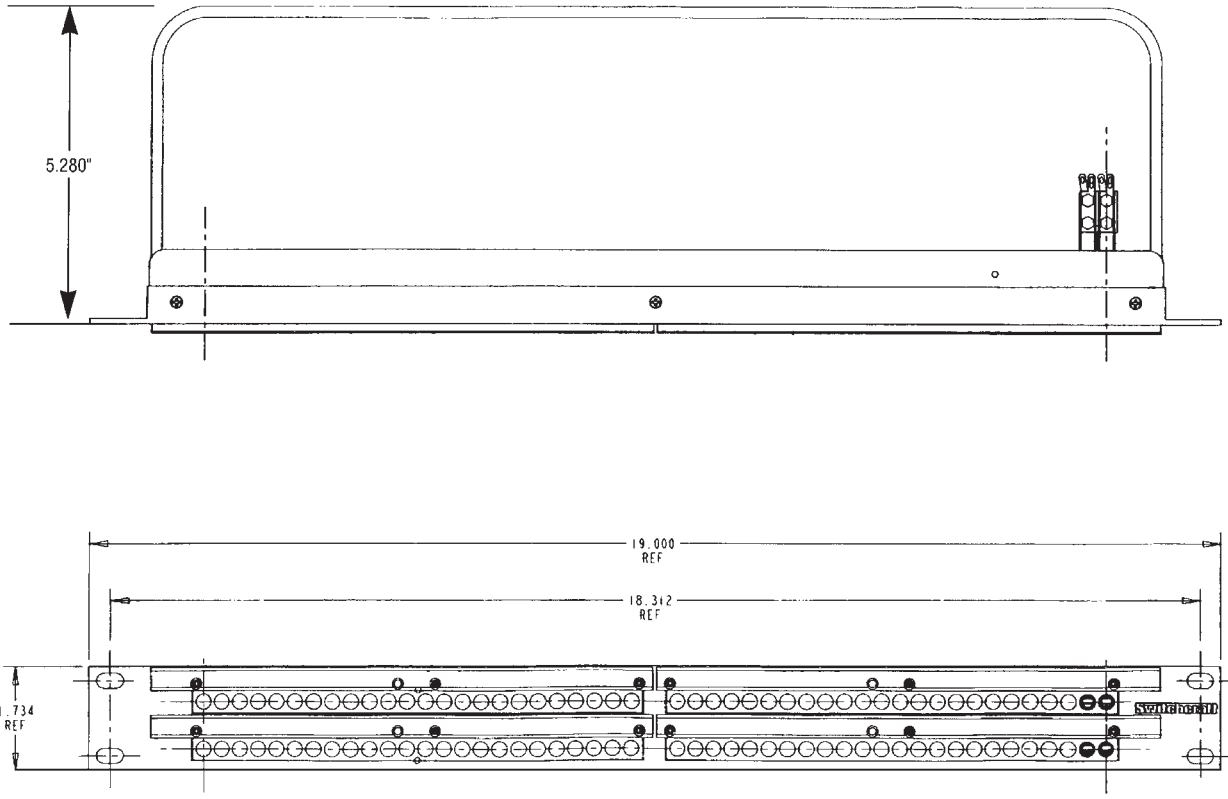

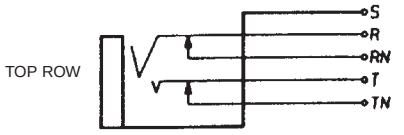

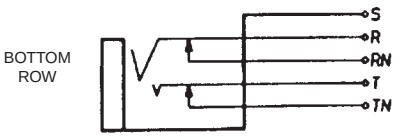

TTP96ASFN

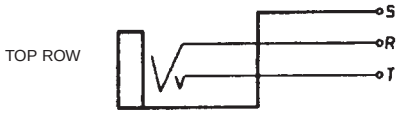

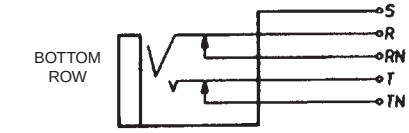

TTP96ASHN

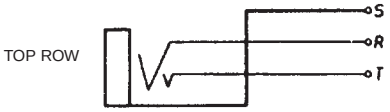

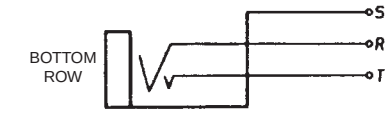

TTP96ASNN

DIMENSIONS ARE FOR REFERENCE ONLY $\frac{\text{Inch}}{(\text{mm})}$

* Please visit the product pages on our website for the most up-to-date product information

Q-G® PATCHBAY SERIES

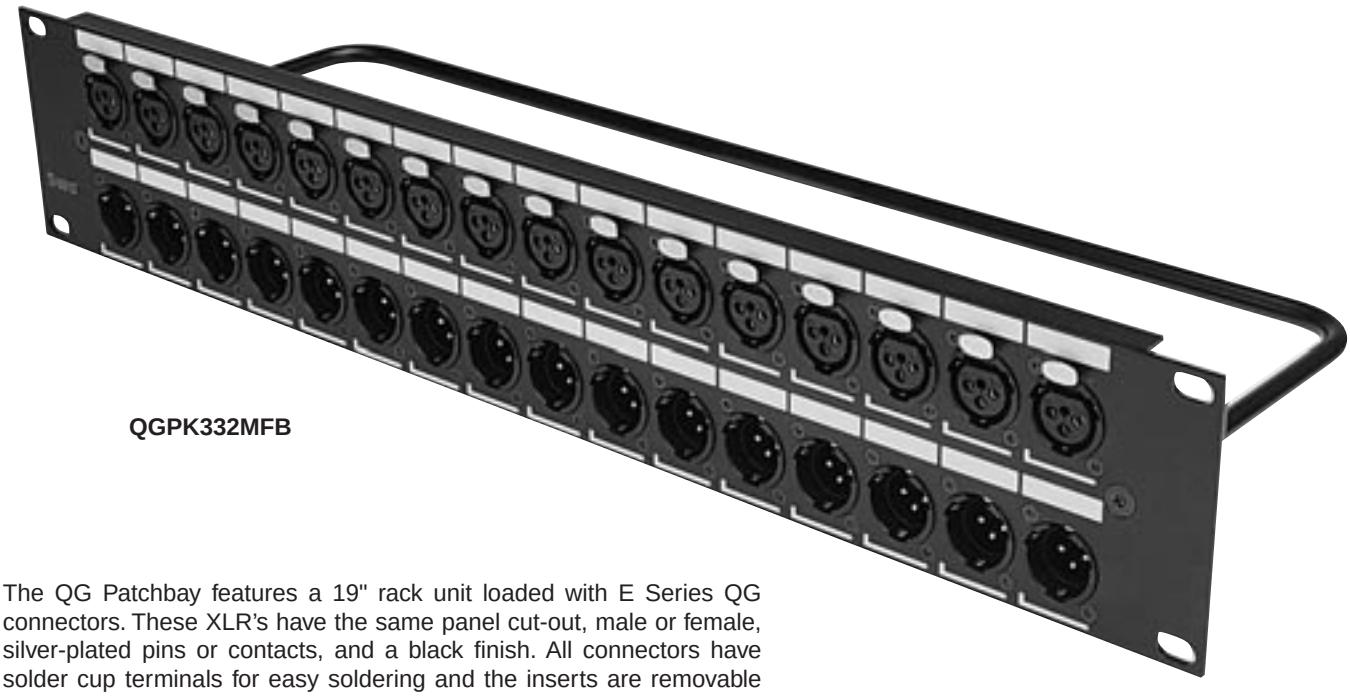

QGPK332MFB

The QG Patchbay features a 19" rack unit loaded with E Series QG connectors. These XLR's have the same panel cut-out, male or female, silver-plated pins or contacts, and a black finish. All connectors have solder cup terminals for easy soldering and the inserts are removable from the back, allowing for easy changes. The one rack unit height version comes with 16 male, or 16 female, or 8 male and 8 female connectors. The two rack unit version comes with 16 male and 16 female connectors. We also offer the unit without connectors, but with the panel cut-outs already punched out. All versions have a rugged cable tie bar, which takes the weight of the cabling away from the solder connections.

FEATURES AND BENEFITS

- Available in 1RU or 2RU versions
- Available with or without the connectors
- E Series connectors are silver-plated, 3 pins/contacts with black finish
- Cable tie bar takes the weight of the cables off the solder terminations
- Rugged aluminum channel increases durability
- Silk-screen designation area makes it easy to re-label channels

SPECIFICATIONS

MATERIALS

CONNECTORS

Housing: Die-cast, black velvet finish
Inserts: Glass-filled thermoplastic
Pin/Contacts: Copper alloy, silver-plated
Latch Release: Steel, nickel-plated
Insert Locking Cam: Die-cast zinc

FRAME

Aluminum, black anodized

CABLE TIE BAR

Steel, black epoxy

Ordering Information		
Part Number	**Height**	**Description**
QGPK116FB	1.75"	16 female
QGPK116MB	1.75"	16 male
QGPK18M8FB	1.75"	8 male, 8 female
QGPK332MFB	3.5"	16 female(top), 16 male (bottom)
QGPK1B	1.75"	Blank panel
QGPK3B	3.5"	Blank panel

DIMENSIONS ARE FOR REFERENCE ONLY Inch (mm)

® Registered trademark of Switchcraft, Inc.
Note: Contact your Switchcraft Representative for price and delivery

* Please visit the product pages on our website for the most up-to-date product information

Q-G® PATCHBAY SERIES (continued)

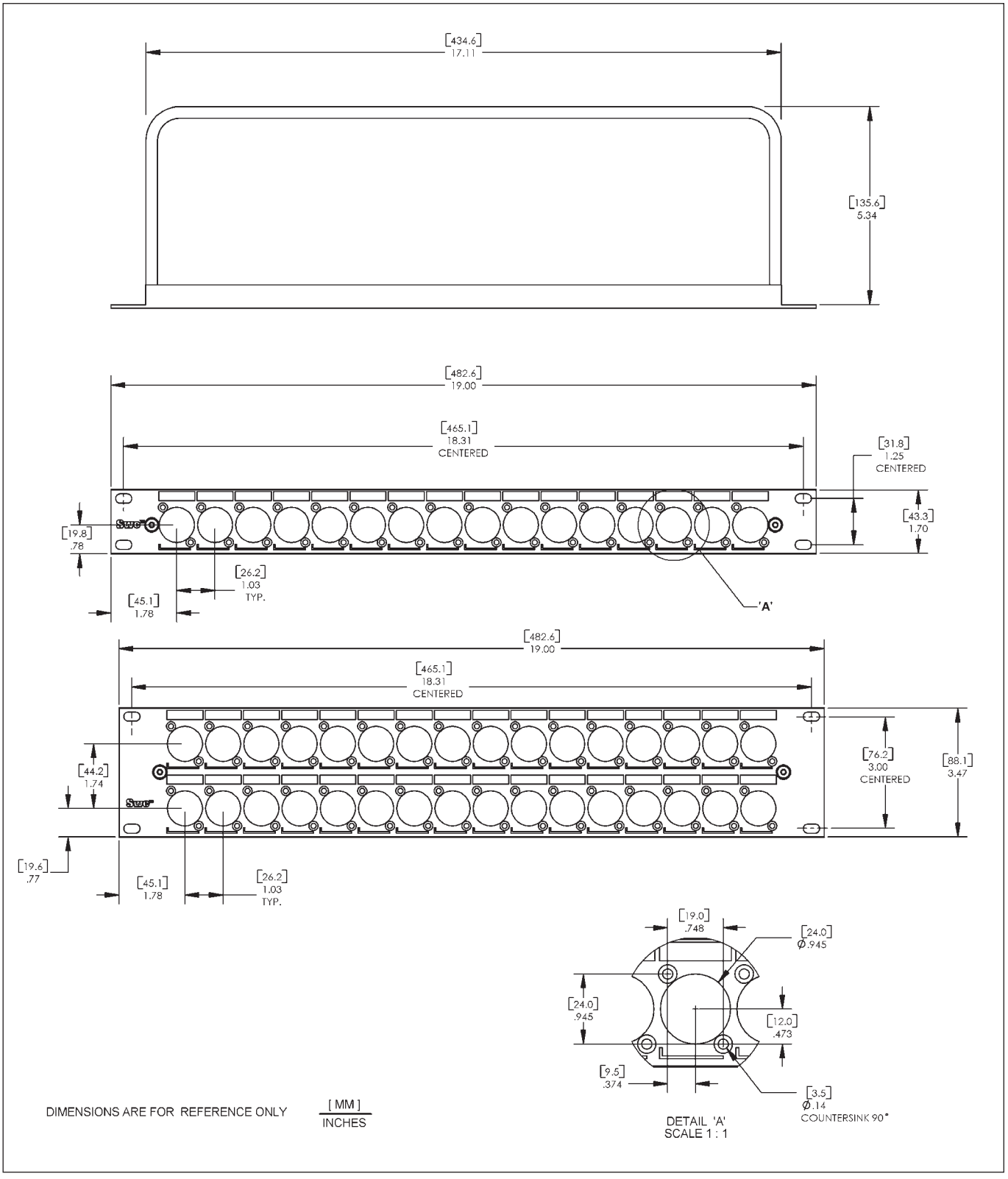

DIMENSIONS ARE FOR REFERENCE ONLY Inch (mm)

* Please visit the product pages on our website for the most up-to-date product information

HPC PATCHBAY SERIES

The HPC Patchbay features a 19” rack unit loaded with HPC Series connectors. Available with either 0.250” Faston terminals or 0.187” Faston terminals. One rack unit height versions come with 12 HPC connectors, two rack unit height versions come with 24 HPC connectors. All versions have a rugged cable tie bar, which takes the weight of the cabling away from the connections.

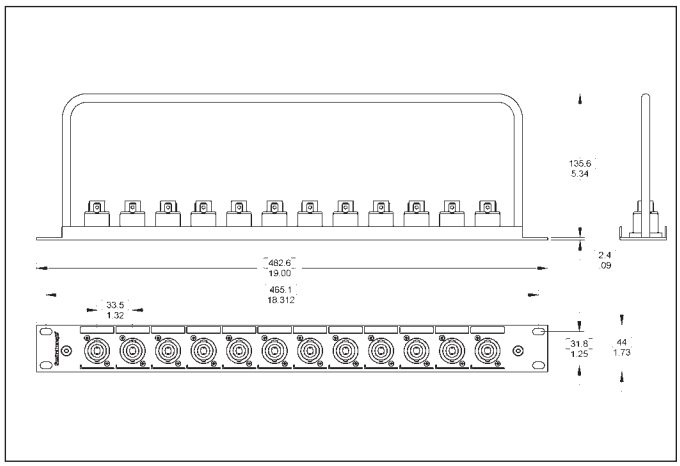

FEATURES AND BENEFITS

- Available in 1RU or 2RU versions
- Available with or without connectors
- HPC Series connectors are compatible with Neutrik Speakon® connectors
- Cable tie bar takes weight of the cables off the terminations
- Rugged aluminum channel
- Silk-screen designation area makes it easy to re-label channels

HP CONNECTOR SPECIFICATIONS

See page 38 for details

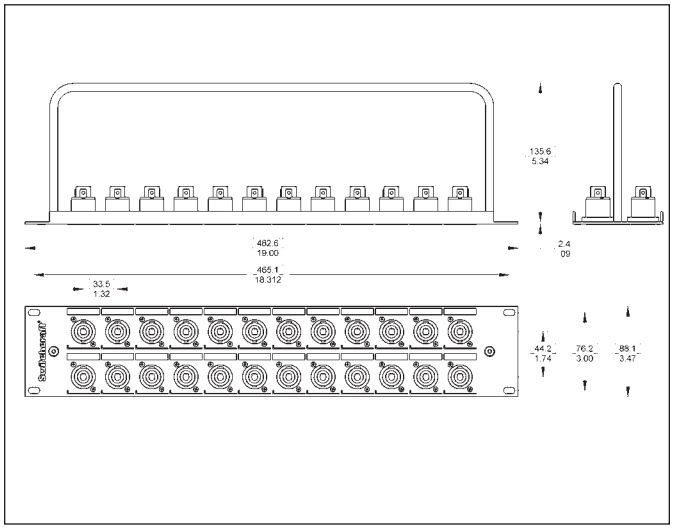

MATERIALS

Housing: Thermoplastic UL 94V-O rated
Contacts: Silver-plated over copper alloy

FRAME
Aluminum, black anodized

CABLE TIE BAR
Steel, black epoxy

Part Number	Height	Description
HPCPK112F	1.75"	12 connectors, 0.250" Fastons
HPCPK112F1	1.75"	12 connectors, 0.187" Fastons
HPCPK1B	1.75"	Blank panel
HPCPK324F	3.50"	24 connectors, 0.250" Fastons
HPCPK324F1	3.50"	24 connectors, 0.187" Fastons
HPCPK3B	3.50"	Blank panel

DIMENSIONS ARE FOR REFERENCE ONLY Inch (mm)

® Registered trademark of Neutrik
Note: Contact your Switchcraft Representative for price and delivery

* Please visit the product pages on our website for the most up-to-date product information

RS 422 DATA PATCHBAY SERIES

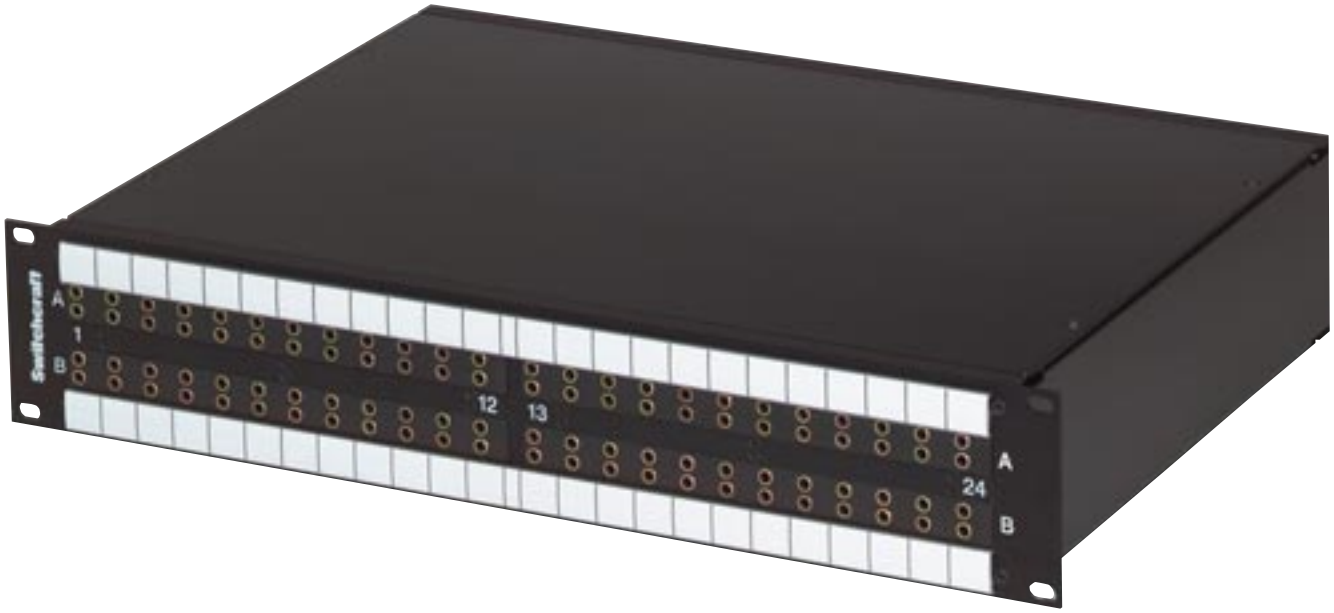

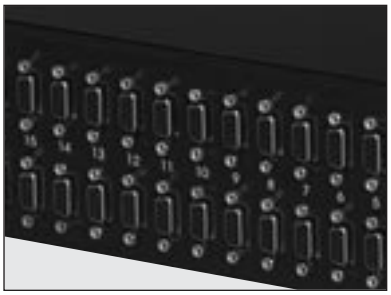

RS422 Ordering Information

Part Number*	No. of Jacks	Front Panel Layout	Back Plane	Rack Height
RS422H48N081	2 x 8	Horizontal	9 Pin D-Sub	1
RS422V4N081	2 x 8	Vertical	9 Pin D-Sub	1
RS422H4N161	2 x 16	Horizontal	9 Pin D-Sub	1
RS422H4N162	2 x 16	Horizontal	9 Pin D-Sub	2
RS422V4N161	2 x 16	Vertical	9 Pin D-Sub	1
RS422V4N162	2 x 16	Vertical	9 Pin D-Sub	2
RS422H4N242	2 x 24	Horizontal	9 Pin D-Sub	2
RS422V4N242	2 x 24	Vertical	9 Pin D-Sub	2
RS422V4N322	2 x 32	Vertical	9 Pin D-Sub	2
RS422PH4N081	2 x 8	Horizontal	PPT Punchdown	1
RS422PV4N081	2 x 8	Vertical	PPT Punchdown	1
RS422PH4N161	2 x 16	Horizontal	PPT Punchdown	1
RS422PH4N162	2 x 16	Horizontal	PPT Punchdown	2
RS422PV4N161	2 x 16	Vertical	PPT Punchdown	1
RS422PV4N162	2 x 16	Vertical	PPT Punchdown	2
RS422PH4N242	2 x 24	Horizontal	PPT Punchdown	2
RS422PV4N242	2 x 24	Vertical	PPT Punchdown	2
RS422PV4N322	2 x 32	Vertical	PPT Punchdown	2

*Add "N" for non-normalled version
See Page 267 for Patchcord Information

FEATURES AND BENEFITS

- Unit Features either 8,16, 24, or 32 TT style jacks on the front Panels, to a 9 pin D-Sub or PPT back Plane.
- All version utilize low capacitance internal wiring for maximum performance of transferring data
- All standard units are available 1 or 2 rack units high (1.5 RU available by request)
- Rugged, attractive black epoxyfinished steel frame chassis

Our standard RS data jackfield series offer a multiple combination of ports, rack heights, and back panel terminations which will easily fit into any television broadcast or video production where custom data patching is required. Custom ports and rack height combinations can be supplied. Contact the factory for details.

SPECIFICATIONS

ELECTRICAL

Internal Wiring:
24 AWG Solid TC, foils shield
Nom Capacitance: 11.5 pF/ft between conductors
21.3 pF/ft between one conductor and conductor connected to the shield
Nom. Impedance: 110 Ohms

DIMENSIONS ARE FOR REFERENCE ONLY Inch (mm)

* Please visit the product pages on our website for the most up-to-date product information

RS 422 DATA PATCHBAY SERIES

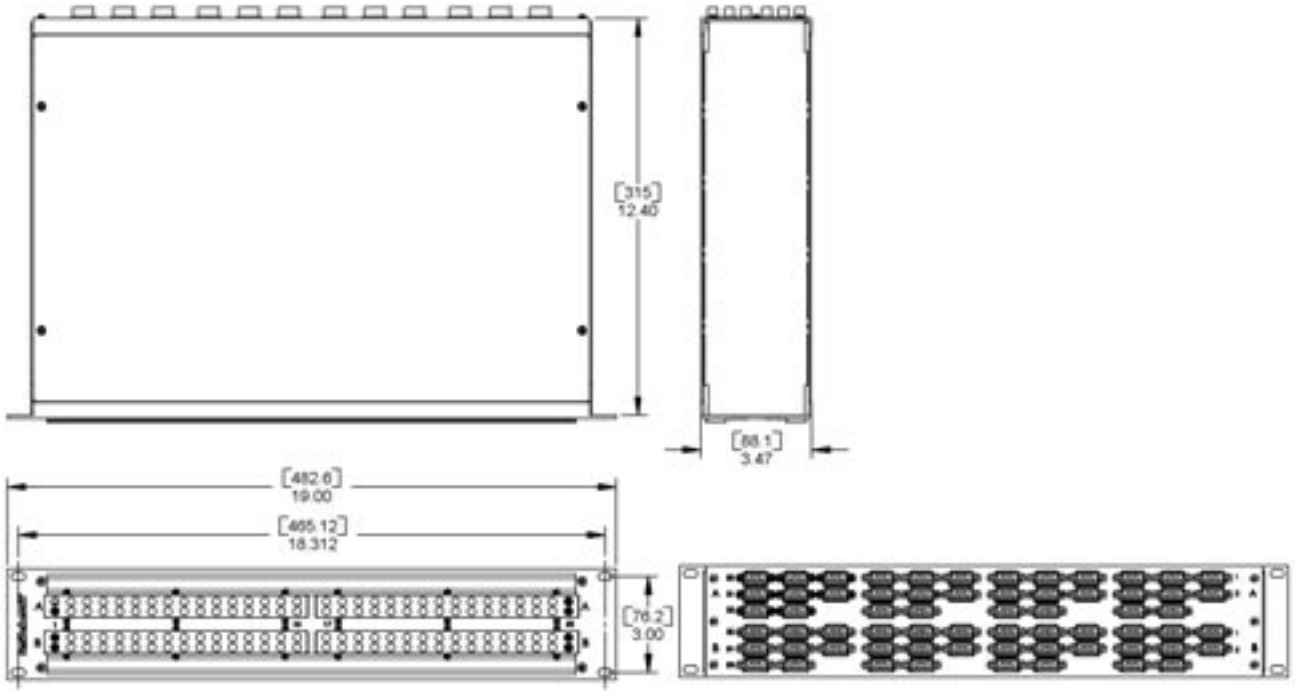

RS422V4N322
32 Vertical Paired Jacks
Front and Back Views

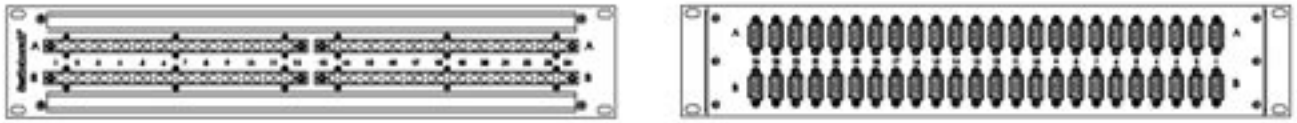

RS422H4N242
24 Horizontal Paired Jacks
Front and Back Views

Ordering Information

Part Number	No. of Jacks	Front Panel Layout	Back Plane	Rack Height
RS422H4N081	2 x 8	Horizontal	9 Pin D-Sub	1
RS422V4N081	2 x 8	Vertical	9 Pin D-Sub	1
RS422H4N162	2 x 16	Horizontal	9 Pin D-Sub	1, 2
RS422V4N162	2 x 16	Vertical	9 Pin D-Sub	1, 2
RS422H4N242	2 x 24	Horizontal	9 Pin D-Sub	2
RS422V4N242	2 x 24	Vertical	9 Pin D-Sub	2
RS422V4N322	2 x 32	Vertical	9 Pin D-Sub	2
RS422PH4N081	2 x 8	Horizontal	PPT Punchdown	1
RS422PV4N081	2 x 8	Vertical	PPT Punchdown	1
RS422PH4N162	2 x 16	Horizontal	PPT Punchdown	1, 2
RS422PV4N162	2 x 16	Vertical	PPT Punchdown	1, 2
RS422PH4N242	2 x 24	Horizontal	PPT Punchdown	2
RS422PV4N242	2 x 24	Vertical	PPT Punchdown	2
RS422PV4N322	2 x 32	Vertical	PPT Punchdown	2

DIMENSIONS ARE FOR REFERENCE ONLY $\frac{\text{Inch}}{(\text{mm})}$

® Registered trademark of Switchcraft, Inc.
Note: Contact your Switchcraft Representative for price and delivery

* Please visit the product pages on our website for the most up-to-date product information

VPP VIDEO PATCHBAY SERIES



VPP24K3HD75T

VJHD*75TX

The VPP Series video patchbays offer a wide variety of options for video patching. The HD Series meets SMPTE 292M specifications for high definition video signaling, covering a bandwidth range from DC to 2.4GHz. The SD Series is perfect for serial digital, with a bandwidth from DC to 1.75GHZ. Both come in either terminated or non-terminated, 24 or 26 jacks, 1.75" or 3.5" heights.

FEATURES AND BENEFITS

- HD Series meets SMPTE 292M Specifications
- SD Series has a bandwidth from DC to 1.75GHz
- Black thermoplastic modules insulate jacks from chassis
- Jacks feature rugged heavy duty housings

VIDEO JACK SPECIFICATIONS

ELECTRICAL

Rated Bandwidth: 2.4 GHz (HD), 1.75 GHz (SD)
Characteristic Impedance: 75 ohms
Return Loss: Better than –15 dB
Insertion Loss: Better than –.5 dB
Contact Resistance: Less than 20 milliohms
Termination Resistance: 75 W, ±1%
Center Conductor: Accepts .090 pin diameter

MECHANICAL

Mechanical Shock: Per MIL-STD-202, Method 213, Test condition I
Vibration: Per MIL-STD-202, Method 201
Insertion Force: 12 lbs. maximum
Withdrawal Force: 3 lbs. minimum
Life Cycle: 30,000

MATERIAL

Housing: Zinc alloy, nickel plated
Center Contacts: Copper alloy, gold plated
Switching Springs: Copper alloy, gold plated
Grounding Contacts:
HD Series - Copper alloy, gold plated
SD Series - Copper alloy, nickel plated
Insulators: Thermoplastic, UL 94V-0 rated

ENVIRONMENTAL

Operating Temperature: – 40ºC to 65ºC
Storage Temperature: – 55ºC to 85ºC
Thermal Shock: Per MIL-STD-202, Method 107
Moisture and Humidity:
Per MIL-STD-202, Method 106

Ordering Information

Part Number	Type of Jack	No. of Jacks	Height	Description
VPP24K1HD*75T	HD	24	1.75"	Terminated
VPP24K1HD*NT	HD	24	1.75"	Non-term
VPP24K1SD*75T	SD	24	1.75"	Terminated
VPP24K1SD*NT	SD	24	1.75"	Non-term
VPP26K1HD*75T	HD	26	1.75"	Terminated
VPP26K1HD*NT	HD	26	1.75"	Non-term
VPP26K1SD*75T	SD	26	1.75"	Terminated
VPP26K1SD*NT	SD	26	1.75"	Non-term
VPP24K3HD*75T	HD	24	3.5"	Terminated
VPP24K3HD*NT	HD	24	3.5"	Non-term
VPP24K3SD*75T	SD	24	3.5"	Terminated
VPP24K3SD*NT	SD	24	3.5"	Non-term
VPP26K3HD*75T	HD	26	3.5"	Terminated
VPP26K3HD*NT	HD	26	3.5"	Non-term
VPP26K3SD*75T	SD	26	3.5"	Terminated
VPP26K3SD*NT	SD	26	3.5"	Non-term

*Add “N” for non-normalled version

DIMENSIONS ARE FOR REFERENCE ONLY Inch (mm)

* Please visit the product pages on our website for the most up-to-date product information

VPP VIDEO PATCHBAY SERIES (continued)

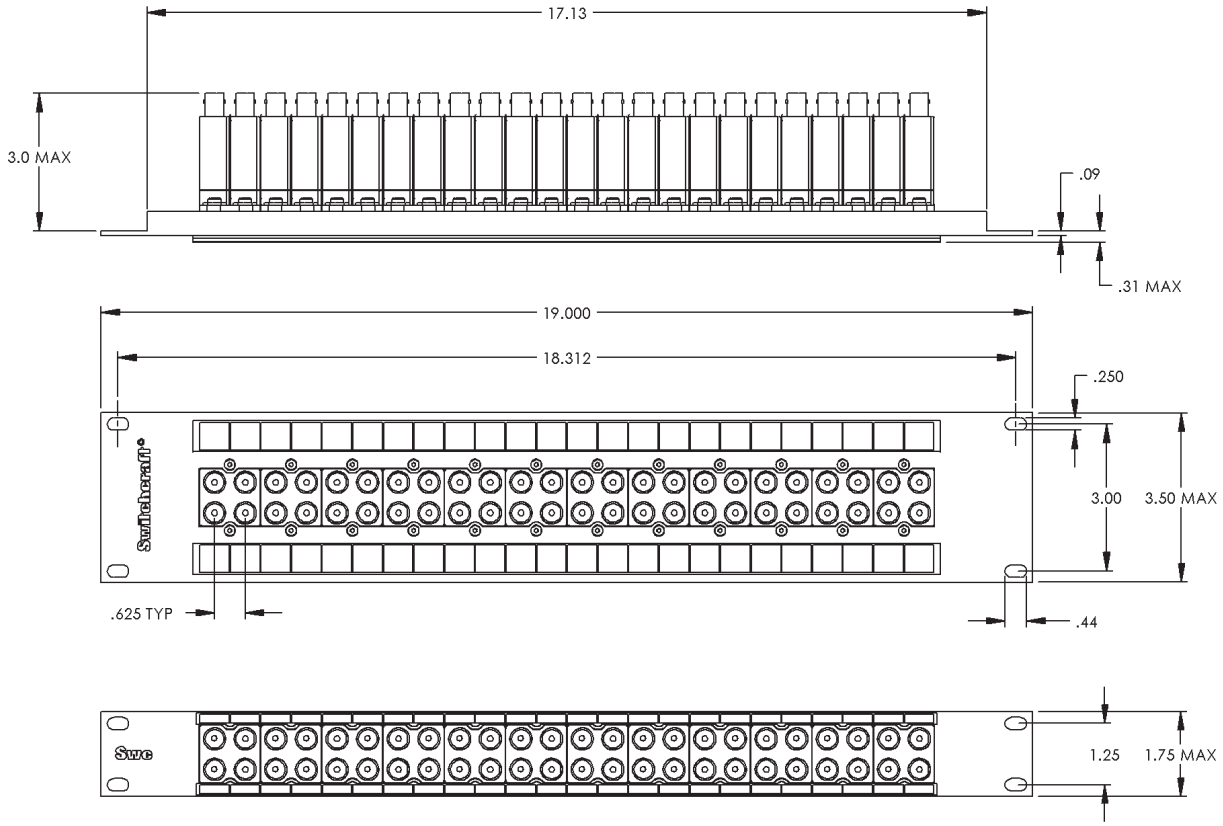

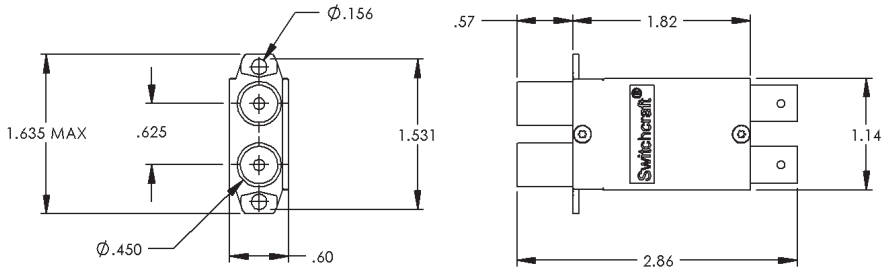

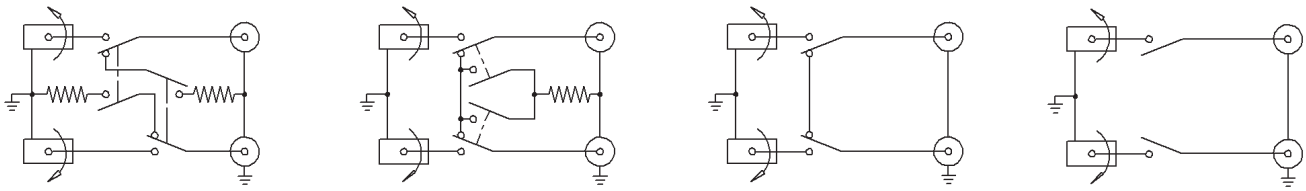

NON-NORMALLED TERMINATED | NORMALLED TERMINATED | NORMALLED NON-TERMINATED | NON-NORMALLED NON-TERMINATED

DIMENSIONS ARE FOR REFERENCE ONLY Inch (mm)

® Registered trademark of Switchcraft, Inc.
Note: Contact your Switchcraft Representative for price and delivery

* Please visit the product pages on our website for the most up-to-date product information

VPP VIDEO PATCHBAY SERIES (continued)

Ordering–Individual Jacks		
Part Number	**Type**	**Description**
VJHD*75TX	HD	Terminated
VJHD*NTX	HD	Non-terminated
VJSD*75TX	SD	Terminated
VJSD*NTX	SD	Non-terminated
*Add “N” for non-normalled version		

SMITH CHART (TYPICAL)

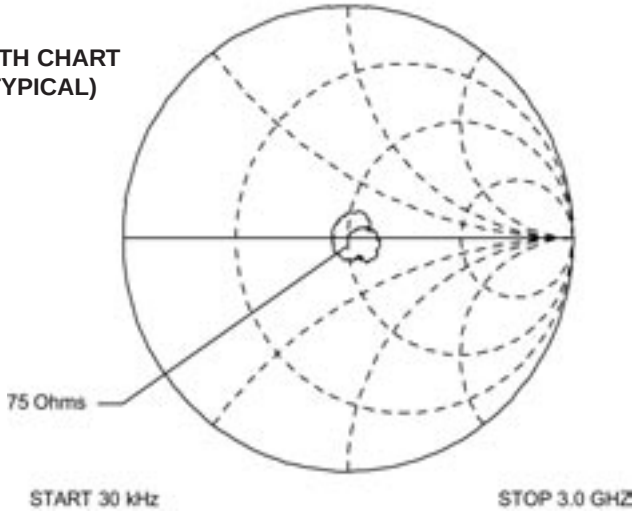

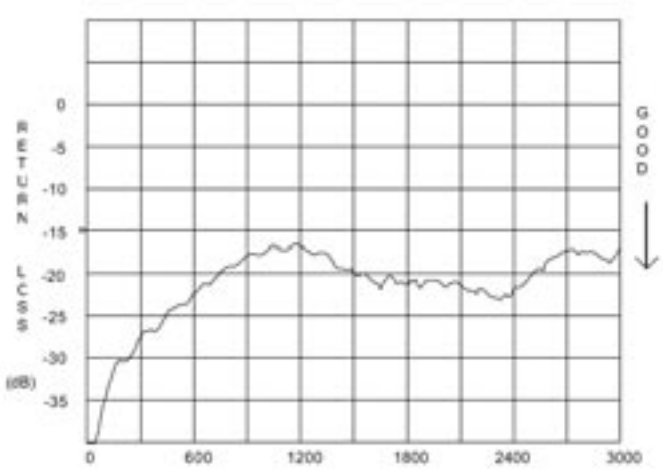

FREQUENCY (MHz)

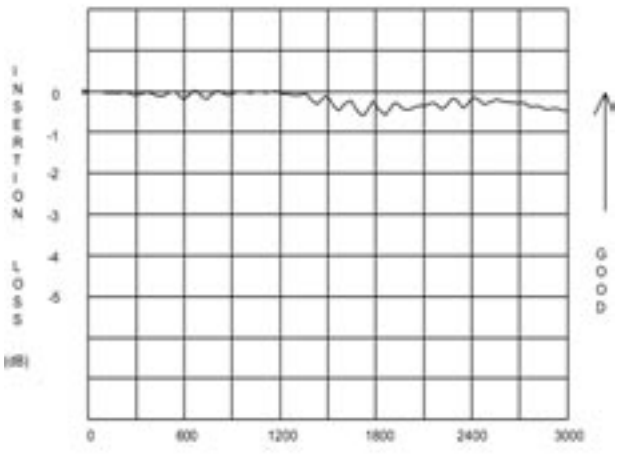

FREQUENCY (MHz)

DIMENSIONS ARE FOR REFERENCE ONLY Inch (mm)

* Please visit the product pages on our website for the most up-to-date product information

MVP MIDSIZE VIDEO PATCHBAY SERIES

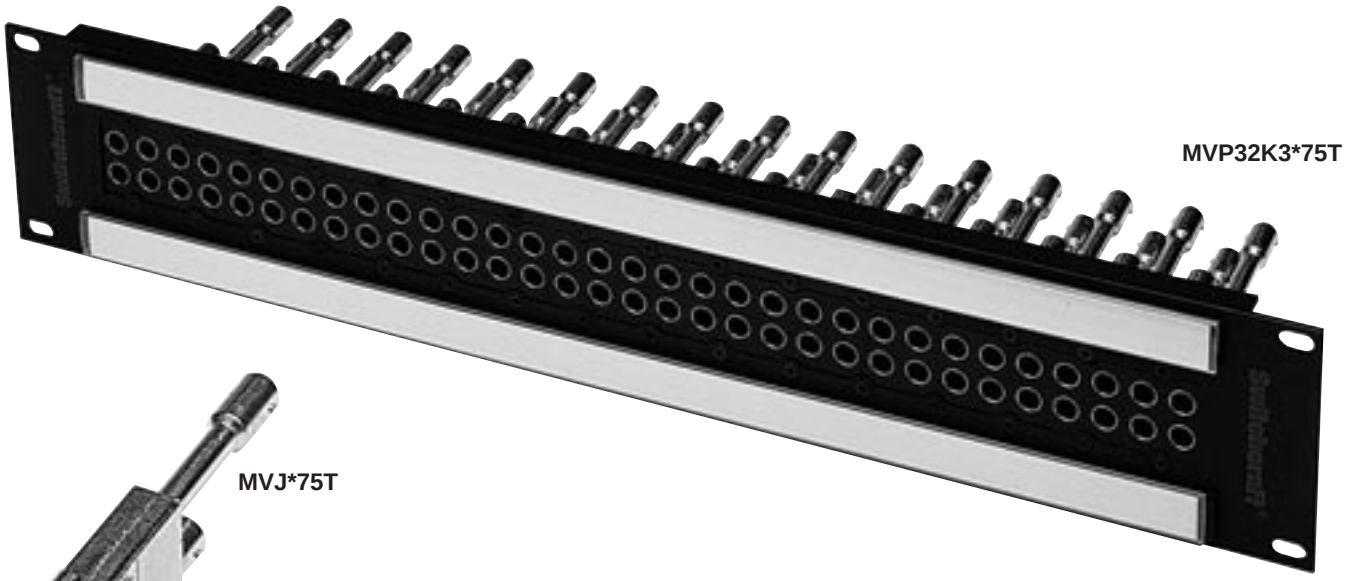

MVP32K3*75T

MVJ*75T

The MVP Series video patchbays offer outstanding performance and high density. Patchbays consist of 32 jacks in either 1RU or 2RU heights, jacks come either terminated or non-terminated. These jacks are rated from DC to 3 GHz, and are rated at 30,000 lifecycles.

FEATURES AND BENEFITS

- Midsize video jacks rated from DC to 3 GHz
- 32 midsize jacks mounted either 1RU, 1.5RU or 2RU panel
- Available in terminated or non-terminated configurations

SPECIFICATIONS

MATERIAL

Frame: Aluminum, black anodized
Designation Strips: Vinylite, white
Designation Strip Covers: Lexan, transparent
Jack Inserts: Thermoplastic, UL 94V-0 rated

MIDSIZE VIDEO JACK SPECIFICATIONS

ELECTRICAL

Rated Bandwidth: 3.0 GHz
Characteristic Impedance: 75 ohms
Return Loss: See Typical Return Loss Chart
Insertion Loss: See Typical Insertion Loss Chart
Contact Resistance: Less than 20 milliohms
Termination Resistance: 75 W, ±1%
Center Conductor: Accepts .048 pin diameter

MECHANICAL

Mechanical Shock: Per MIL-STD-202, Method 213, Test condition I
Vibration: Per MIL-STD-202, Method 201
Insertion Force: 12 lbs. maximum
Withdrawal Force: 3 lbs. minimum
Life Cycle: 30,000

MATERIAL

Housing: Zinc alloy, nickel plated
Center Contacts: Copper alloy, gold plated
Switching Springs: Copper alloy, gold plated
Grounding Contacts: Copper alloy, gold plated
BNC Insulators: Teflon
Actuators: Thermoplastic, UL94V-0 rated

ENVIRONMENTAL

Operating Temperature: – 40ºC to 65ºC
Storage Temperature: – 55ºC to 85ºC
Thermal Shock: Per MIL-STD-202, Method 107
Moisture and Humidity: Per MIL-STD-202, Method 106

Ordering Information

Part Number	Type of Jack	Height	Description
MVP32K1*75T	Midsize	1.75"	Terminated
MVP32K1*NT	Midsize	1.75"	Non-terminated
MVP32K3*75T	Midsize	3.5"	Terminated
MVP32K3*NT	Midsize	3.5"	Non-terminated

* Add “N” for non-normalled version

Note: For 1.5RU (2.62" height), use K2

DIMENSIONS ARE FOR REFERENCE ONLY Inch (mm)

® Registered trademark of Switchcraft, Inc.
Note: Contact your Switchcraft Representative for price and delivery

* Please visit the product pages on our website for the most up-to-date product information

MVP MIDSIZE VIDEO PATCHBAY SERIES (continued)

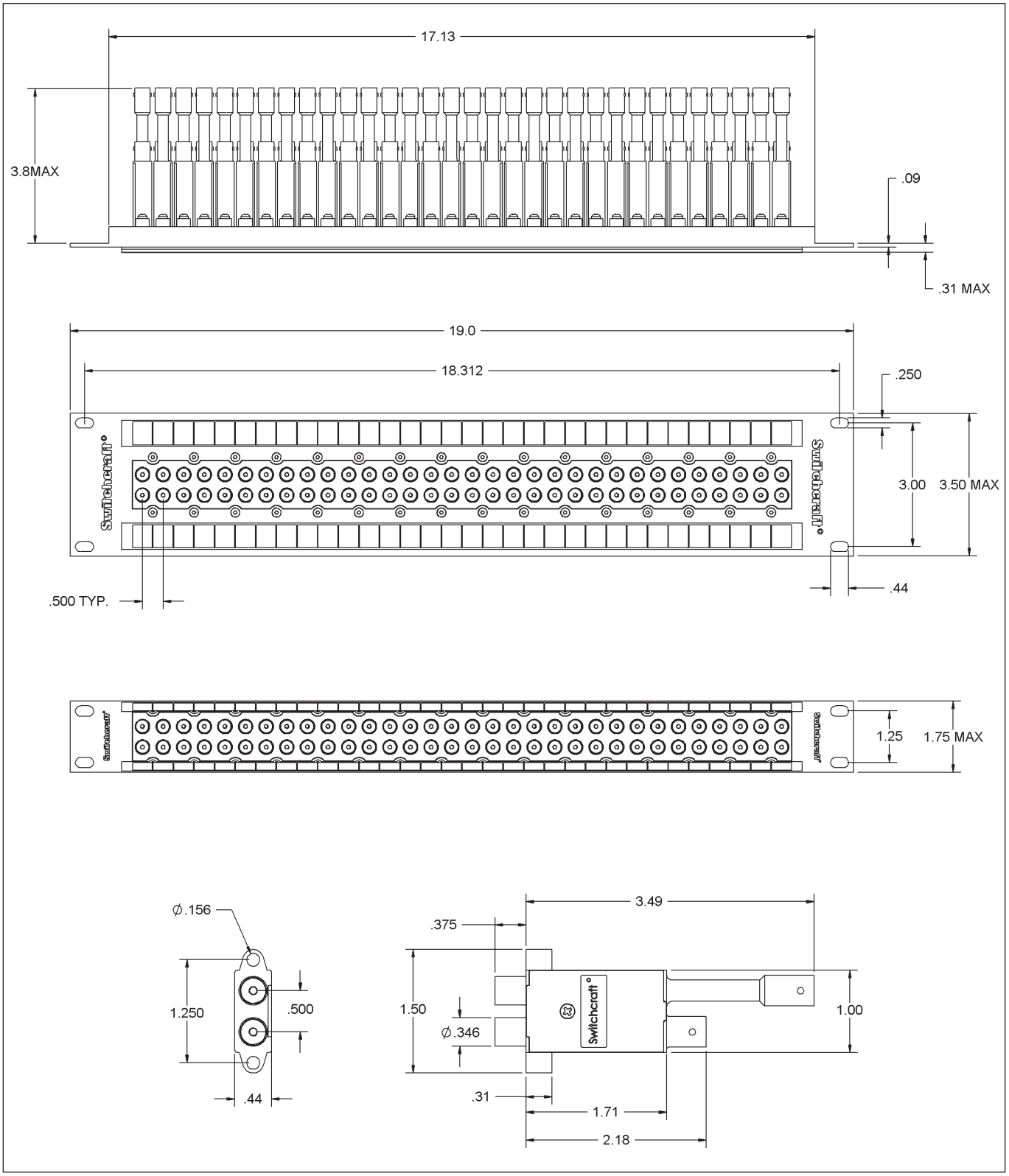

DIMENSIONS ARE FOR REFERENCE ONLY Inch (mm)

* Please visit the product pages on our website for the most up-to-date product information

MVP MIDSIZE VIDEO PATCHBAY SERIES (continued)

Ordering Information	
Part Number	**Description**
MVJ*75TX	Terminated
MVJ*NTX	Non-terminated
*Add “N” for non-normalled version	

SMITH CHART (TYPICAL)

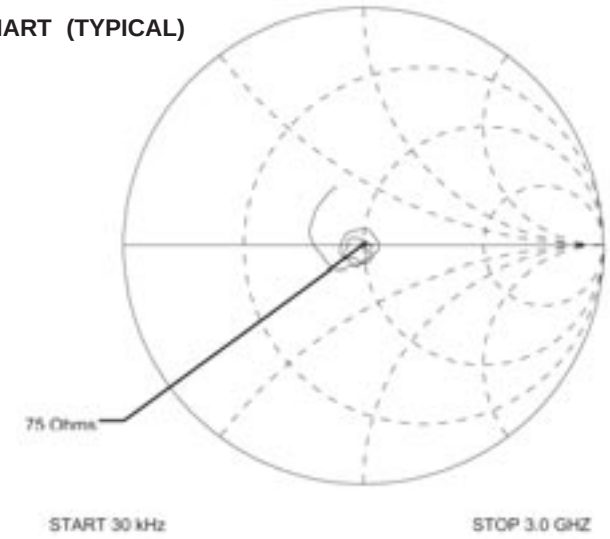

RETURN LOSS (TYPICAL)

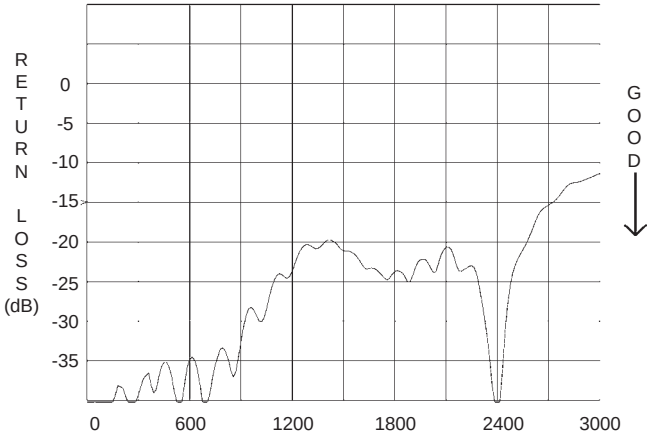

RETURN LOSS (TYPICAL)

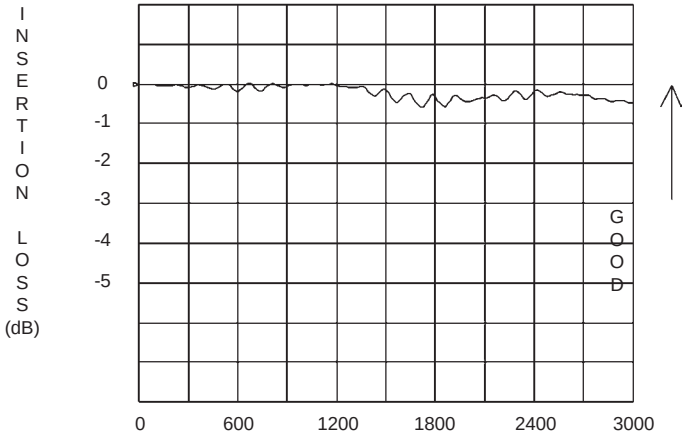

DIMENSIONS ARE FOR REFERENCE ONLY Inch (mm)

® Registered trademark of Switchcraft, Inc.
Note: Contact your Switchcraft Representative for price and delivery

* Please visit the product pages on our website for the most up-to-date product information

VAP VIDEO/AUDIO PATCHBAY SERIES

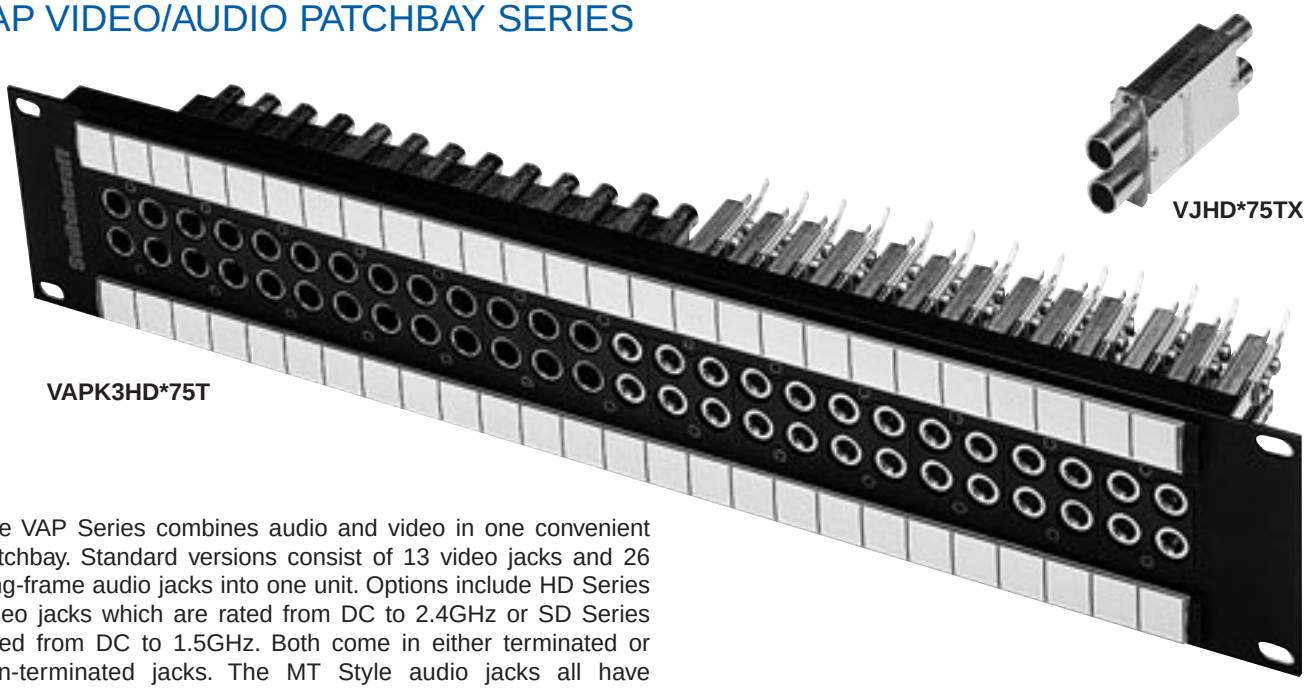

The VAP Series combines audio and video in one convenient patchbay. Standard versions consist of 13 video jacks and 26 long-frame audio jacks into one unit. Options include HD Series video jacks which are rated from DC to 2.4GHz or SD Series rated from DC to 1.5GHz. Both come in either terminated or non-terminated jacks. The MT Style audio jacks all have nickel-plated steel frames and gold-plated switching contacts. Flared terminals make soldering easier. All audio jacks are T,R,S, TN, and RN. Individual modules are useful for custom configurations.

FEATURES AND BENEFITS

- Combines 13 video jacks and 26 long-frame audio jacks into one patchbay
- Available with either HD Series or SD Series video jacks
- All audio jacks are nickel-plated with steel frames and gold-plated switching contacts
- Audio modules consist of 4 YMT334BN jacks, video modules consist of 2 dual video jacks

VIDEO JACK SPECIFICATIONS

ELECTRICAL

Rated Bandwidth: 2.4 GHz (HD), 1.75 GHz (SD)
Characteristic Impedance: 75 ohms
Return Loss: Better than –15 dB
Insertion Loss: Better than –.5 dB
Contact Resistance: Less than 20 milliohms
Termination Resistance: 75 W, ±1%
Center Conductor: Accepts .090 pin diameter

MECHANICAL

Mechanical Shock: Per MIL-STD-202, Method 213, Test condition I
Vibration: Per MIL-STD-202, Method 201
Insertion Force: 12 lbs. maximum
Withdrawal Force: 3 lbs. minimum
Life Cycle: 30,000

MATERIAL

Housing: Zinc alloy, nickel plated
Center Contacts: Copper alloy, gold plated
Switching Springs: Copper alloy, gold plated
Grounding Contacts:
HD Series - Copper alloy, gold plated
SD Series - Copper alloy, nickel plated
Insulators: Thermoplastic, UL 94V-0 rated

ENVIRONMENTAL

Operating Temperature: – 40ºC to 65ºC
Storage Temperature: – 55ºC to 85ºC
Thermal Shock: Per MIL-STD-202, Method 107
Moisture and Humidity: Per MIL-STD-202, Method 106

Ordering Information			
Part Number	**Type of Jack**	**Height**	**Description**
VAPK1HD*75T	HD	1.75"	Terminated
VAPK1HD*NT	HD	1.75"	Non-terminated
VAPK1SD*75T	SD	1.75"	Terminated
VAPK1SD*NT	SD	1.75"	Non-terminated
VAPK3HD*75T	HD	3.5"	Terminated
VAPK3HD*NT	HD	3.5"	Non-terminated
VAPK3SD*75T	SD	3.5"	Terminated
VAPK3SD*NT	SD	3.5”	Non-terminated
Modules			
VMAFN	MT		4- YMT334BN jacks
VMVHD*75T	HD		2- HD terminated jacks
VMVHD*NT	HD		2- HD non-terminated jacks
VMVSD*75T	SD		2- SD terminated jacks
VMVSD*NT	SD		2-SD non-terminated jacks
*Add “N” for non-normalled version			

DIMENSIONS ARE FOR REFERENCE ONLY Inch (mm)

* Please visit the product pages on our website for the most up-to-date product information

VAP VIDEO/AUDIO PATCHBAY SERIES (continued)

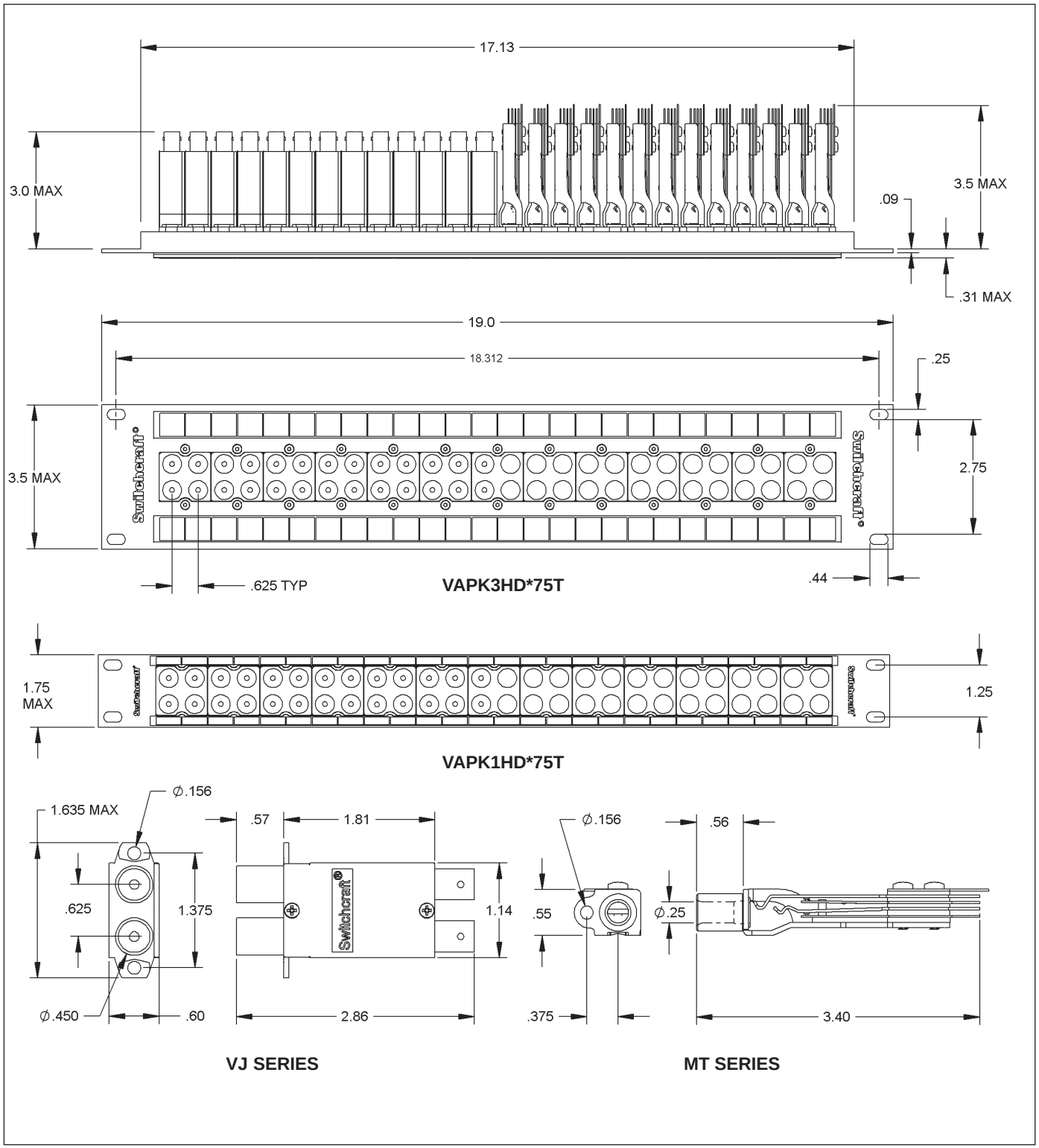

DIMENSIONS ARE FOR REFERENCE ONLY Inch (mm)

® Registered trademark of Switchcraft, Inc.
Note: Contact your Switchcraft Representative for price and delivery

* Please visit the product pages on our website for the most up-to-date product information

MBPK VIDEO/AUDIO PATCHBAY SERIES

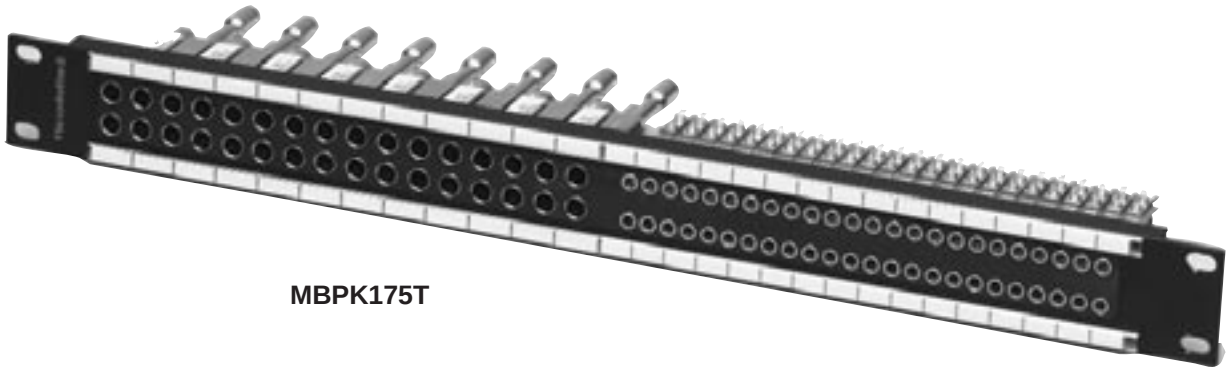

MBPK175T

The MBPK Series combines audio and video in one convenient patchbay. The patchbay consists of 16 midsize video jacks and 48 TT bantam jacks. Options include 75 Ohm terminated or non-terminated video jacks. All TT bantam jacks have T, R, S, TN and RN solder terminals. Audio jacks have nickel-plated steel frames, gold-plated crossbar switching contacts and flared terminals for easier soldering.

FEATURES AND BENEFITS

Combines 16 midsize video jacks and 48 TT bantam audio jacks

Video jacks are rated from DC to 3.0 GHZ

All audio jacks are nickel-plated with steel frames and gold-plated crossbar switching contacts

For non-terminated version, use part no. MBPK1NT

VIDEO JACK SPECIFICATIONS

See page 196 for details

AUDIO JACK SPECIFICATIONS

See page 164 for details

MATERIALS

FRAME

Aluminum, black anodized

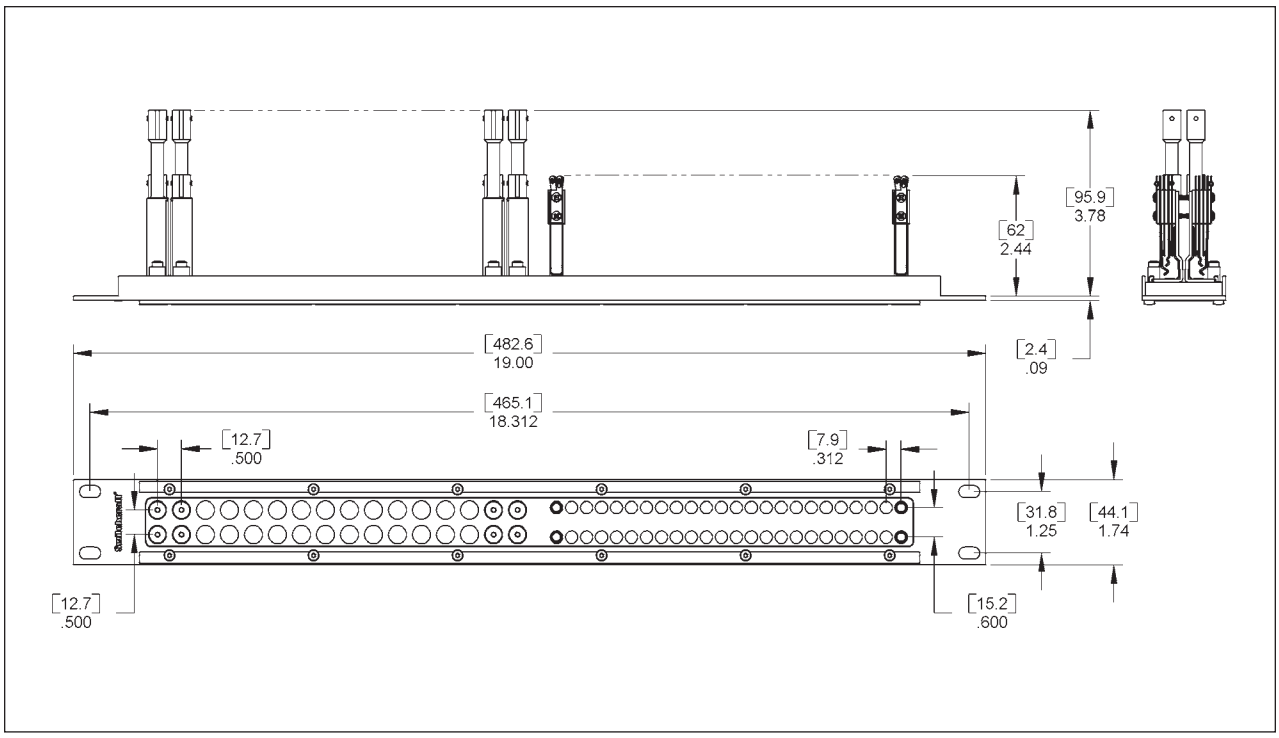

DIMENSIONS ARE FOR REFERENCE ONLY Inch (mm)

* Please visit the product pages on our website for the most up-to-date product information

LONG FRAME (1/4") TELEPHONE JACK PANELS

STANDARD SINGLE ROW JACK PANELS
SERIES 1200 AND 1400

SERIES 1200
Panels accomodate 24 T-Jax® jacks in standard 1.75 inch x 19 inch racks. Jack openings are on alternate .625 inch and .750 inch spacing; twin plugs cannot be cross-connected between adjacent jack pairs. Includes designation strips (marking strips and transparent plastic covers).

SERIES 1300
Same as Series 1200, except MT-Jax® are used in panel assemblies.

SERIES 1400
Mounts 26 T-Jax®. Openings are on continuous .625 inch centers. Twin plug can be used on any two adjacent jacks. Single designation strip (marking strip, and plastic cover). WEco equivalent is 230B.

SERIES 1400300
Same as Series 1400, except designation strip is Kwik-Change® type which is easier to install and remove and provides larger vertical designation marking area. Strip holder is recessed into top of panel for additional panel strength. 1400301 has single height Kwik-Change® designation strip. 1400315 has a single height Kwik- Change® designation strip along bottom of panel and double height strips above jacks. Top designation strip has .188 inch overhang above 1.75 inch panel height, to help seal small opening between adjacent panels. CAUTION: Because of this overhang, 1400315 cannot be mounted one above another in a rack.

SERIES 1500
Same as Series 1400 except MT-Jax® are used in panel assemblies.

SPECIFICATIONS
Jack Panel: General purpose black phenolic resin
Frame (except 1400300): Plated, steel
End Bracket and Side Strip (1400300 only): Cold rolled plated steel
Designation Strip (except 1400300): Clear plastic.
"Kwik-Change" Designation Strip (1400300): Extruded aluminum, black anodized and black thermoplastic UL 94V-0.
Marking Strip: White plastic, matte finish.
Marking Strip Cover: Clear extruded plastic.
Screws: #6-32 x .25 inch phillips RHMS (for mounting jacks).

ORDERING
Part number table lists blank panels and popular jack panel assemblies. If you wish to mount components on basic panels, order jacks, lamp jacks, and switches separately. (See appropriate section in this catalog.) For other panel assemblies, provide complete details with your inquiry or order. Switchcraft can build special assemblies to your requirements in small or large quantities. See wire wrapping data. Series 1200 and 1400 are available with holes pre-drilled for vertical designation strips (Series DS320). Add prefix "D" to part numbers for pre-drilled panels: D1200, D1400301, etc.



Series 1200
*Shown with optional jacks. See next page for specific part numbers.



Series 1400
*Shown with optional jacks. See next page for specific part numbers.

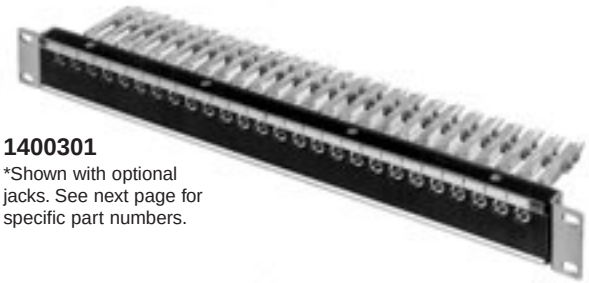

1400301
*Shown with optional jacks. See next page for specific part numbers.

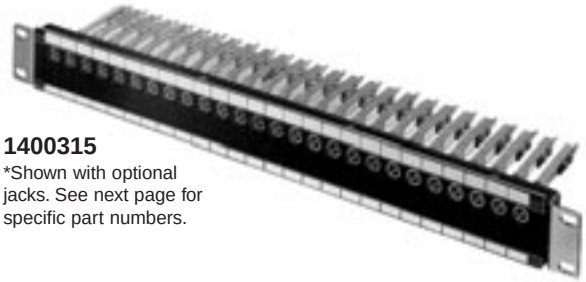

1400315
*Shown with optional jacks. See next page for specific part numbers.

DIMENSIONS ARE FOR REFERENCE ONLY Inch (mm)

® Registered trademark of Switchcraft, Inc.
Note: Contact your Switchcraft Representative for price and delivery

* Please visit the product pages on our website for the most up-to-date product information

LONG FRAME (1/4") TELEPHONE JACK PANELS (continued)

Part Numbers			Part Numbers	Description	
	Assembly with Jacks With Solder Lugs		Assembly with Jacks With Wire-Wrapping Terminals	Number of Jacks	Type of Jacks Installed
Panel Only	Straight	Offset			
1200	-	-	-	None	
-	1332A	◊X1332A	◊W1332A	24	MT332A , XMT332A or WMT332A MT-Jax®
-	◊1332B	◊X1332B	-	24	MT332B or XMT332B MT-Jax®
-	◊1334B	◊X1334B	◊W1334B	24	MT334B,XMT334B or WMT334B MT-Jax®
1400	-	-	-	None	
1400301	-	-	-	None	
◊1400315	-	-	-	None	
-	1532A	X1532A	-	26	MT332A or XMT332A MT-Jax®
-	◊1532A301	-	◊W1532A301	26	MT332A or WMT332A MT-Jax®
-	◊1532B	-	-	26	MT332B MT-Jax®
-	◊1532B301	◊X1532B301	◊W1532B301	26	MT332B, XMT332B or WMT332B MT-Jax®
-	◊1534B	◊X1534B	◊W1534B	26	MT334B, XMT334B or WMT334B MT-Jax®
-	-	-	◊W1534B301	26	WMT334B MT-Jax®
-	-	◊X1542B315	-	26	XMT342B MT-Jax®

◊ Special order only; contact factory for price and delivery.
1. Prefix "X" denotes offset lugs for buss wiring.

Jack Mounting Screws: #6-32, **P10725**, can be ordered separately. Contact Switchcraft.
Legend Cards (Series 1200, 1300) - **A1029**
Legend Windows (Series 1200, 1300) - **A1030**

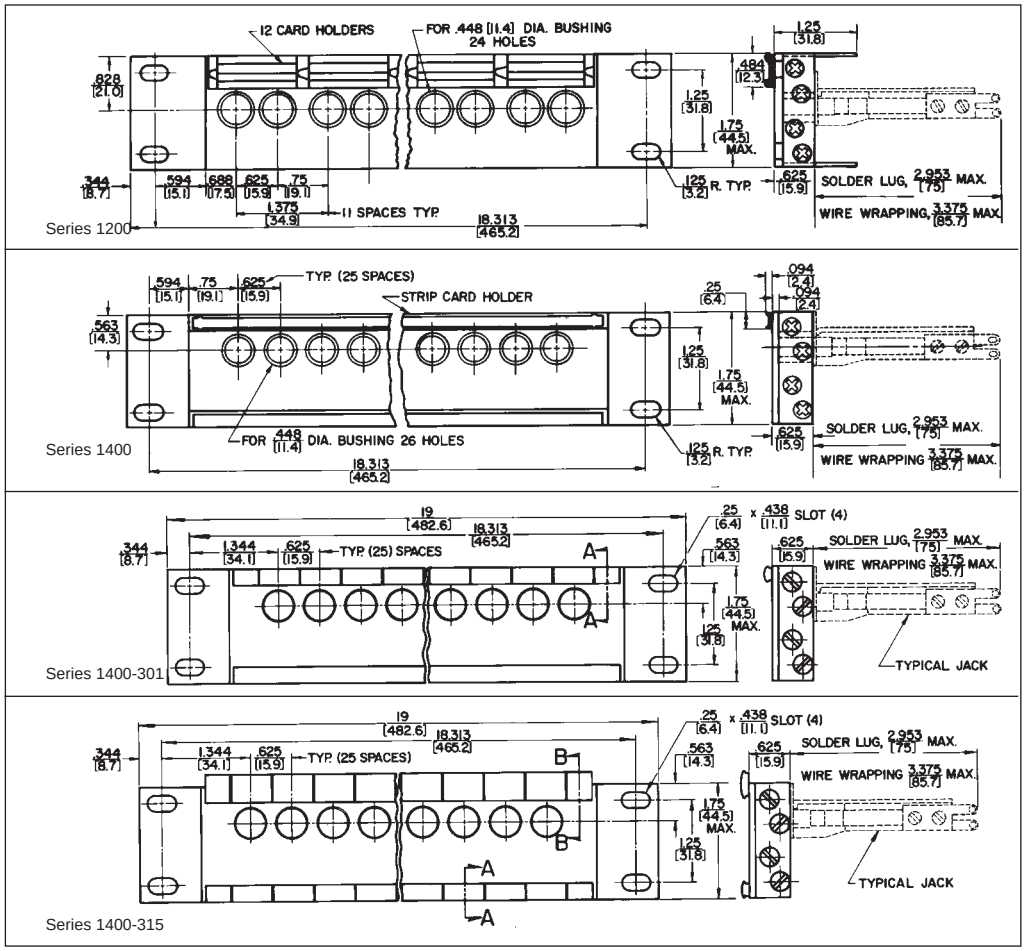

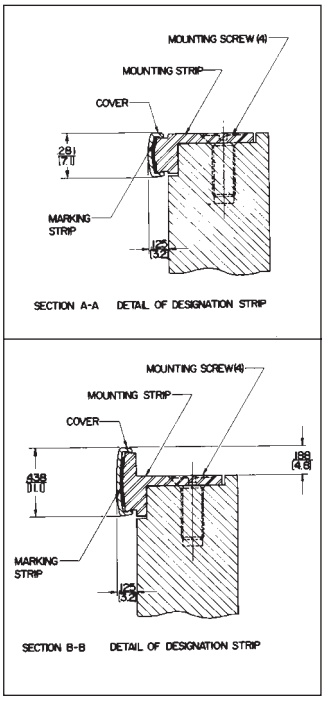

DIMENSIONS ARE FOR REFERENCE ONLY Inch (mm)

* Please visit the product pages on our website for the most up-to-date product information

LONG FRAME (1/4") TWIN ROW JACK PANELS

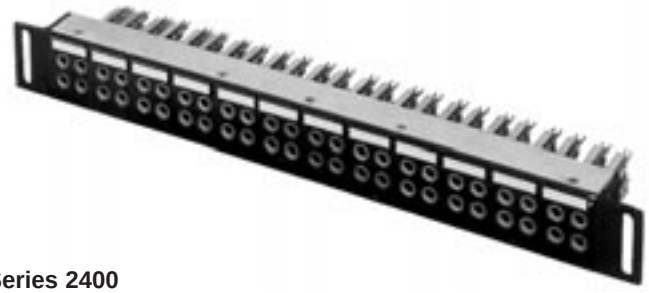

Series 2400
*Shown with optional jacks, See next page for specific part numbers.

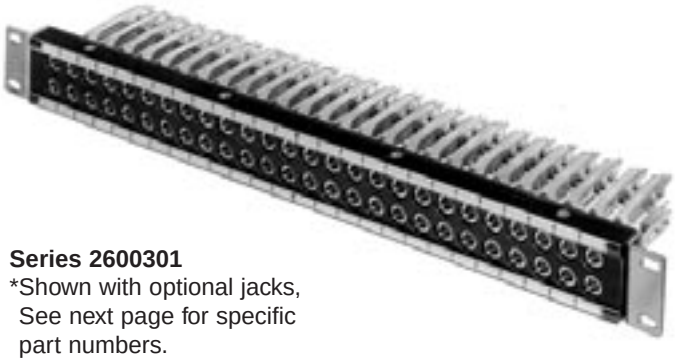

Series 2600301
*Shown with optional jacks, See next page for specific part numbers.

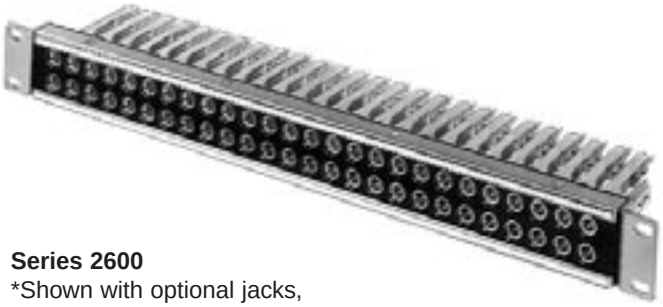

Series 2600
*Shown with optional jacks, See next page for specific part numbers.

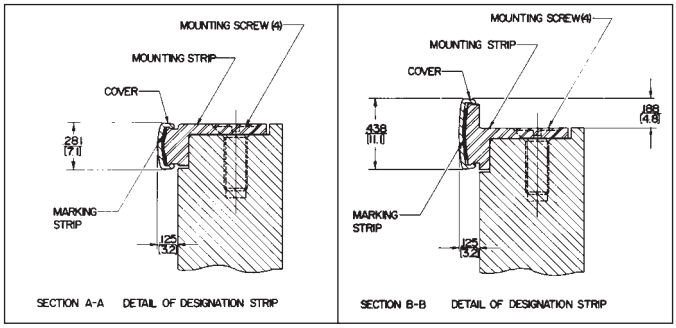

STANDARD TWIN ROW JACK PANELS
SERIES 2400, 2600, 2600300, 2700300 – PHENOLIC

Twin row jack panels offer greater jack density - up to 52 jacks per panel. All panels fit standard 19" wide racks. Blank panels or standard assemblies can be ordered from Switchcraft. Series 2600 panels are direct equivalent to WEco #230A.

SERIES 2400
Twin row panel accommodates 48 T-Jax®. Openings are on alternate .625" and .75" centers. Panel is 2.125" high and fits standard 19" racks. Twin plug cannot be cross-connected between jacks in adjacent quads, but may be connected either horizontally or vertically in the same quad. Single designation strip.

SERIES 2500
Same as Series 2400 except MT-Jax® are used.

SERIES 2600
Twin row panel accommodates 52 T-Jax® in standard 1.75" x 19" racks. Jack openings are on continuous centers. Twin plug can be connected to any two adjacent jacks, either horizontally or vertically. Two designation strips. WEco equivalent is #230A.

SERIES 2600300
Same as Series 2600, except designation strips are Kwik-Change® type, providing larger vertical marking area. Top strip holder is recessed into top of panel to provide additional strength. 2600301 has single height designation strips (one above and below each row of jacks).

2600310
Has a double height strip above top row and a steel reinforcing strip below bottom row. Top strip has .188" overhang above 1.75" panel height, helping seal the small opening between adjacent panels. Note: overhang prevents mounting panel one above another in a rack.

SERIES 2700
Same as Series 2600 except MT-Jax® are used in panel assemblies. The series is available with cable tie bar.

ORDERING
1. Order basic panels and popular assemblies by part number from table.
2. For special panels provide complete details with your inquiry or order.
3. Series 2600 is available with hole pre-drilled for vertical designation strips, Series DS320. Add prefix “D” to part number (D2600301, etc.).
4. Jack Mounting Screws: #6-32, P10725, can be ordered separately. Contact Switchcraft.

DIMENSIONS ARE FOR REFERENCE ONLY Inch (mm)

® Registered trademark of Switchcraft, Inc.
Note: Contact your Switchcraft Representative for price and delivery

* Please visit the product pages on our website for the most up-to-date product information

LONG FRAME (1/4") TWIN ROW JACK PANELS (continued)

Part Numbers			Part Numbers	Description	
	Assembly with Jacks Having Solder Lugs		Assembly with Jacks Having Wire-Wrapping Terminals	Number of Jacks	Type of Jack Installed
Panel Only	Straight	Offset[1]			
2400	-	-	-	None	
-	◊2432A	◊X2432A	-	48	T332A
-	◊2432B	◊X2432B	-	48	T332B
-	◊2434B	◊X2434B	-	48	T334B or XMT334B T-Jax®
-	2532A	◊X2532A	◊W2532A	48	MT332A, XMT332A or WMT332A MT-Jax®
-	◊2532B	◊X2532B	-	48	MT332B or XMT332B MT-Jax®
-	◊2533	-	-	48	MT333 MT-Jax®
-	◊2533B	-	◊W2533B	48	MT333B or WMT333B MT-Jax®
-	◊2534B	X2534B	-	48	MT334B or XMT334B MT-Jax®
-	◊2542B	-	-	48	MT342B MT-Jax®
-	◊2544B	-	-	48	MT344B, MT-Jax®
-	◊2588	-	-	24	MT388, Twin MT-Jax®
-	◊2589	-	-	24	MT389 Twin MT-Jax®
2600	-	-	-	None	
2600301	-	-	-	None	(WEco equivalent #230A)
2600310	-	-	-	None	
-	◊2732A	◊X2732A	-	52	MT332A or XMT332A MT-Jax®
-	◊2732A301	◊X2732A301	◊W2732A301	52	MT332A, XMT332A or WMT332A MT-Jax®
-	◊2732B	◊X2732B	◊W2732B	52	MT332B, XMT332B or WMT332B MT-Jax®
-	◊2732B301	◊X2732B301	◊W2732B301	52	MT332B, XMT332B or WMT332B MT-Jax®
-	◊2733B	-	-	52	MT333B, MT-Jax®
-	◊2734B	◊X2734B	-	52	MT334B or XMT334B MT-Jax®
-	◊2734B301	◊X2734B301	◊W2734B301	52	MT334B, XMT334B or WMT334B MT-Jax®
-	◊2789	-	◊W2789	26	MT389 or WMT389 Twin MT-Jax®
-	-	◊X2832A	-	48	XT332A
-	-	◊X2932A	-	48	XMT332A

1. Prefix "X" denotes offset lugs for buss wiring.
◊ Special order only; contact factory for price and delivery.

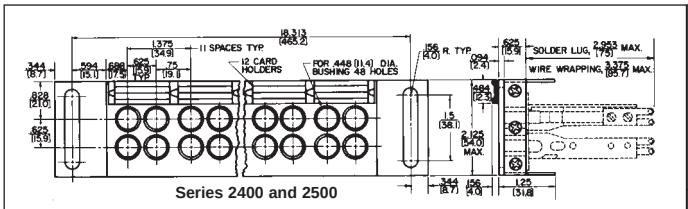

Series 2400 and 2500

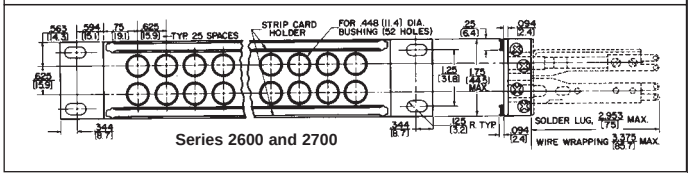

Series 2600 and 2700

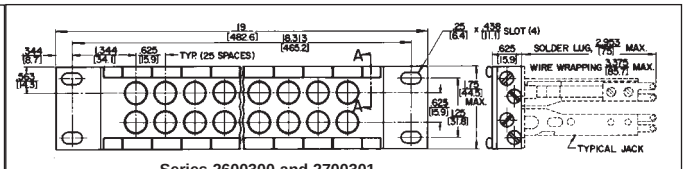

Series 2600300 and 2700301

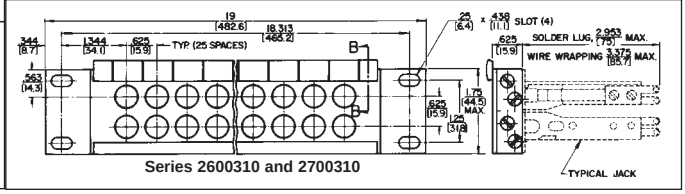

Series 2600310 and 2700310

DIMENSIONS ARE FOR REFERENCE ONLY Inch (mm)

* Please visit the product pages on our website for the most up-to-date product information

LONG FRAME (1/4") MODULAR TWIN ROW JACK PANELS



SERIES JP122S34B
*Shown with optional jacks, See next page for specific part numbers.



SERIES JP072S32A
*Shown with optional jacks, See next page for specific part numbers.

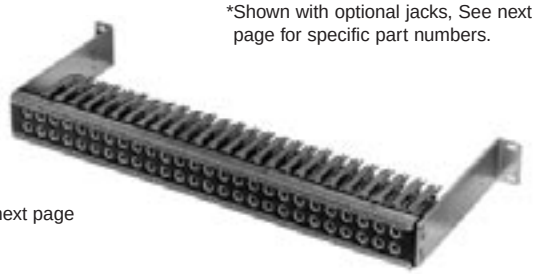

SERIES JP032S32B
*Shown with optional jacks, See next page for specific part numbers.

SERIES JP012000 THROUGH JP122000

Series JP® Modular Jack Panels feature a modular packaging concept. Jacks are mounted on inserts then complete modular insert assemblies are mounted to the panel from the rear. Mounting and wiring are quick and easy. Individual jacks or complete inserts can be removed from the panel with minimum disturbance to wiring and adjacent jacks. JP panels offer three mounting styles (standard rack mount, flush mount, and extension mount), staggered or continuous-center panel openings, two panel lengths (19" and 23"), WEco equivalents, Kwik-Change® designation strips, precision manufactured modular parts, rugged black anodized aluminum frames and quick and easy module or jack removal/installation.

Each module insert has four holes which mount four MT-Jax® or two Twin-Jax®. Each modular jack panel is supplied with two Kwik-Change® designation strips. Mounting strips are integral with panel, and marking strips and clear covers snap into place quickly and easily.

SERIES JP012000
Standard 1.75" x 19" size for console, rack or control panel mounting. Mounts 48 MT-Jax®. Openings are on alternate .625" and .75" centers in each row. A twin plug fits jacks horizontally or vertically in the same quad, but cross-connecting between quads is not possible. Includes 12 black module inserts, insert mounting screws and two Kwik-Change® designation strips.

SERIES JP022000
Same as JP012000, except 23" wide (includes 14 inserts which accommodate 56 MT-Jax®).

SERIES JP032000
Same as JP012000, except with 5.375" extension brackets which permit access to rear of jacks from front of panel. Brackets are supplied mounted to panel.

SERIES JP042000
Same as JP032000, except 23" wide (includes 14 inserts which accommodate 56 MT-Jax®).

SERIES JP052000
Same as JP012000, except designed for flush mounting or standoff mounting. Switchcraft Bracket Kit K107; Contact Switchcraft.

SERIES JP062000
Same as JP052000, except 23" wide (includes 14 inserts which accommodate 56 MT-Jax®).

SERIES JP072000
Same as JP012000, except mounts 52 MT-Jax® and includes 13 black module inserts. Modular equivalent of WEco #230A.

SERIES JP082000
Same as JP072000, except 23" wide (includes 16 inserts which accommodate 64 MT-Jax®). Modular equivalent to WEco #231A.

SERIES JP092000
Same as JP072000, except with 5.375" extension brackets which permit access to rear of jacks from front of panel. Brackets are supplied mounted to panel.

SERIES JP102000
Same as JP092000, except 23" wide (includes 16 inserts which accommodate 64 MT-Jax®).

SERIES JP112000
Same as JP072000, except designed for flush mounting or standoff mounting. Switchcraft Bracket Kit K107; Contact Switchcraft.

SERIES JP122000
Same as JP112000, except 23" wide (includes 16 inserts which accommodate 64 MT-Jax®).

SPECIFICATIONS

Panel and Integral Designation Mounting Strips: Aluminum alloy, extruded. Black anodized per MIL-A-8625
Module Insert: Molded plastic, matte finish. Black standard; white, red, green, blue or yellow available on special order
Marking Strip: White matte finish plastic
Designation Strip Cover: Extruded clear plastic
Screws: #6-32 x 5/15", PHMS, for jack mounting; #4-40 x 1/2" phillips PHMS, for module insert mounting
Brackets: 5.375", aluminum alloy black anodized finish (JP032000, JP042000, JP092000, JP102000)
Screws, Mounting Bracket: #6-32, self-tapping supplied.

DIMENSIONS ARE FOR REFERENCE ONLY Inch (mm)

® Registered trademark of Switchcraft, Inc.
Note: Contact your Switchcraft Representative for price and delivery

* Please visit the product pages on our website for the most up-to-date product information

LONG FRAME (1/4") MODULAR TWIN ROW JACK PANELS (continued)

ORDERING

Order popular assemblies by part number from table. If you wish to mount components on the panels, order blank panels and refer to MODULE INSERTS below. On special order, various combinations of colored inserts mounted in basic panels, as well as many different types of complete assemblies are possible. Provide complete details with your inquiry or order. Standard mount panels are available with holes pre-drilled for vertical designation strips, Series DS320. Add prefix "D" to part number (JPD012000, JPD022000, JPD072000, JPD082000, etc.).

Part Numbers*		# of Jacks	MT-Jax® Installed
Panel Only	Assembly with Jacks Having Solder Lugs		
JP012000	-	None	
-	◊JP012S32A	48	MT332A
-	◊JP012S32B[1]	48	MT332B
-	JP012S34B[1]	48	MT334B
◊JP022000	-	None	
-	◊JP022S32A	56	MT332A
-	◊JP022S32B	56	MT332B
-	◊JP022S34B	56	MT334B
◊JP032000	-	None	
-	◊JP032S32A	48	MT332A
-	◊JP032S32B	48	MT332B
-	◊JP032S34B	48	MT334B
◊JP042000	-	None	
-	◊JP042S32A	56	MT332A
-	◊JP042S32B	56	MT332B
-	◊JP042S34B	56	MT334B
JP052000	-	None	
-	◊JP052S32A	48	MT332A
-	◊JP052S32B	48	MT332B
-	◊JP052S34B	48	MT334B
◊JP062000	-	None	
-	◊JP062S32A	56	MT332A
-	◊JP062S32B	56	MT332B
-	◊JP062S34B	56	MT334B

Part Numbers*		# of Jacks	MT-Jax® Installed
Panel Only	Assembly with Jacks Having Solder Lugs		
JP072000	-	None[1]	
-	◊JP072S32A	52	MT332A
-	◊JP072S32B	52	MT332B
-	JP072S34B	52	MT334B
◊JP082000	-	None[2]	
-	◊JP082S32A	64	MT332A
-	◊JP082S32B	64	MT332B
-	◊JP082S34B	64	MT334B
◊JP092000	-	None	
-	◊JP092S32A	52	MT332A
-	◊JP092S32B	52	MT332B
-	◊JP092S34B	52	MT334B
◊JP102000	-	None	
-	◊JP102S32A	64	MT332A
-	◊JP102S32B	64	MT332B
-	◊JP102S34B	64	MT334B
◊JP112000	-	None	
-	◊JP112S32A	52	MT332A
-	◊JP112S32B	52	MT332B
-	◊JP112S34B	52	MT334B
◊JP122000	-	None	
-	◊JP122S32A	64	MT332A
-	◊JP122S32B	64	MT332B
-	◊JP122S34B	64	MT334B

1. Add a "1" to the part number to specify a cable tie bar.
Mounting Screws: #6-32, **P10725** for jack mounting and #4-40, **P2435** for insert mounting, can be ordered separately.
◊ Special order only; contact Switchcraft.

* Panels with jacks having wire-wrapping terminals are approximately 10% higher in price. Contact Switchcraft.
1. Non-modularized equivalent is WEco #230A.
2. Non-modularized equivalent is WEco #231A.

MODULE INSERTS

JP9942 JP9922 JP9902



Standard color is black, matte finish plastic. Contact Switchcraft. Inserts are ideal for mounting directly in control panels and chassis where convenient jack connections are required. Applications include test outlets, remote equipment connections and headsets such as those used in telephone and telecommunications equipment.

Part Number	Description
JP9942	Black module insert with four jack openings (less jacks). Includes two, #4-40 machine screws for mounting.
JP9922	Black module insert with two jack openings (less jacks). Includes two, #4-40 machine screws for mounting.
JP9902	Black module insert without holes. Includes two, #4-40 machine screws for mounting. Used where no jacks are needed.

DIMENSIONS ARE FOR REFERENCE ONLY Inch (mm)

* Please visit the product pages on our website for the most up-to-date product information

LONG FRAME (1/4") MODULAR TWIN ROW JACK PANELS (continued)

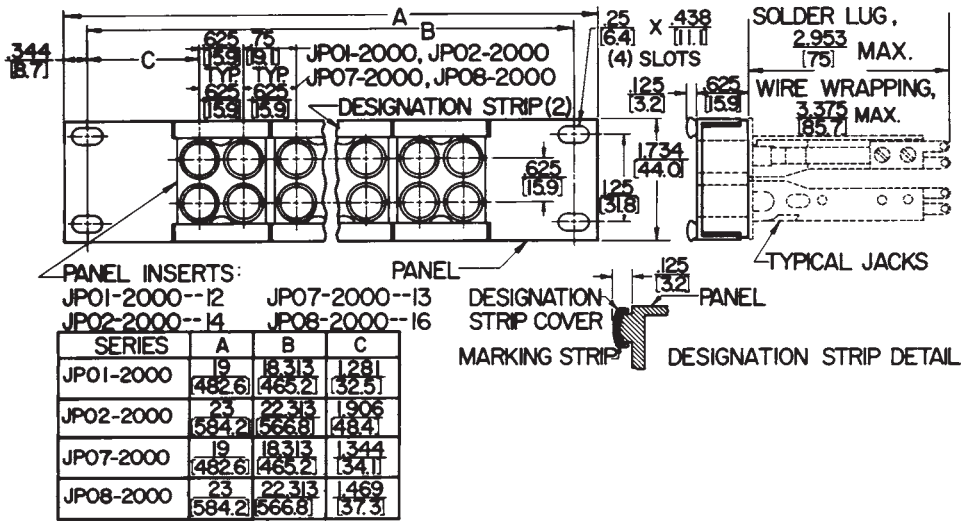

SERIES	A	B	C
JP01-2000	19 [482.6]	18.313 [465.2]	1.281 [32.5]
JP02-2000	23 [584.2]	22.313 [566.8]	1.906 [48.4]
JP07-2000	19 [482.6]	18.313 [465.2]	1.344 [34.1]
JP08-2000	23 [584.2]	22.313 [566.8]	1.469 [37.3]

Series JP01-2000, JP02-2000, JP07-2000, JP08-2000

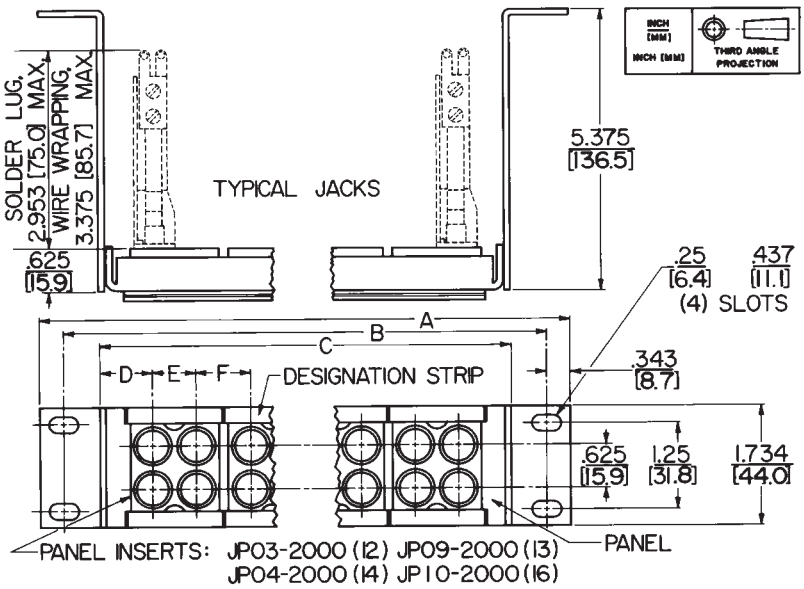

SERIES	A	B	C	D	E	F
JP03-2000	19.0 [482.6]	18.312 [465.1]	17.305 [439.6]	.778 [19.8]	.625 [15.9]	.75 [19.1]
JP04-2000	23.0 [584.2]	22.312 [566.7]	21.305 [541.2]	1.403 [35.6]	.625 [15.9]	.75 [19.1]
JP09-2000	19.0 [482.6]	18.312 [465.1]	17.305 [439.6]	.84 [21.3]	.625 [15.9]	.625 [15.9]
JP10-2000	23.0 [584.2]	22.312 [566.7]	21.305 [541.2]	.965 [24.5]	.625 [15.9]	.625 [15.9]

Series JP03-2000, JP04-2000, JP09-2000, JP010-2000

DIMENSIONS ARE FOR REFERENCE ONLY Inch (mm)

® Registered trademark of Switchcraft, Inc.
Note: Contact your Switchcraft Representative for price and delivery

* Please visit the product pages on our website for the most up-to-date product information

LONG FRAME (1/4") MODULAR TWIN ROW JACK PANELS (continued)

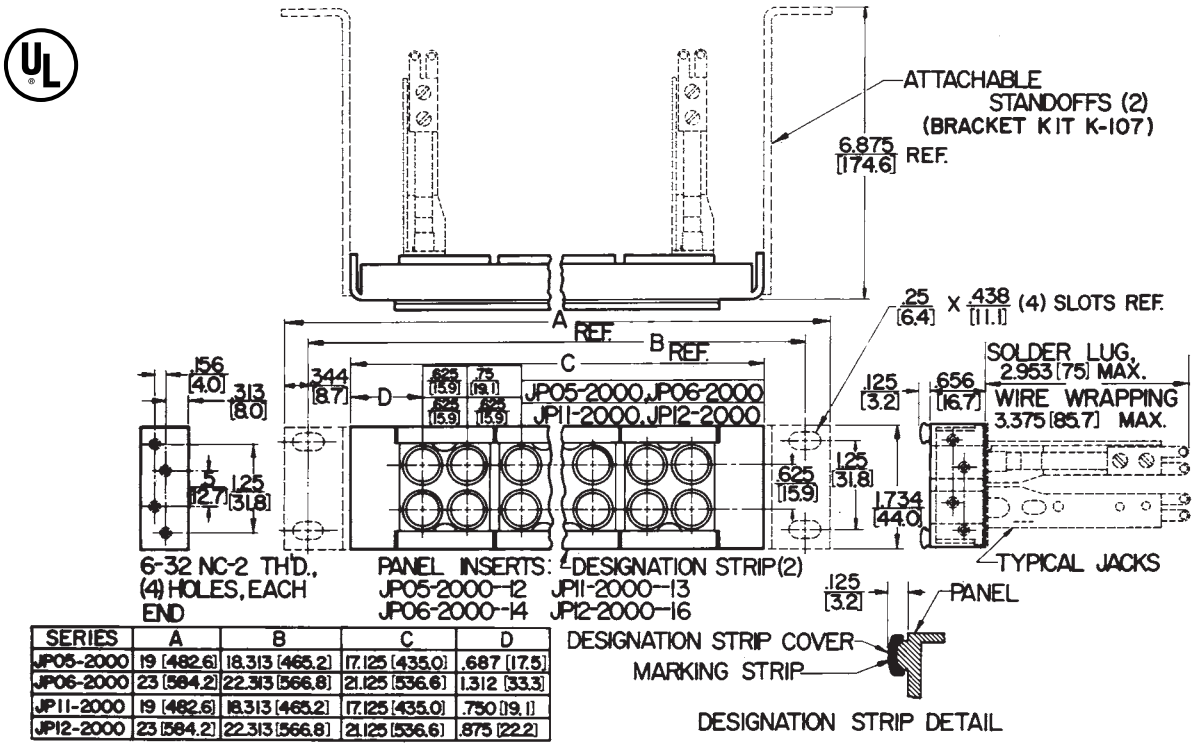

SERIES	A	B	C	D
JP05-2000	19 [482.6]	18.313 [465.2]	17.125 [435.0]	.687 [17.5]
JP06-2000	23 [584.2]	22.313 [566.8]	21.125 [536.6]	1.312 [33.3]
JP11-2000	19 [482.6]	18.313 [465.2]	17.125 [435.0]	.750 [19.1]
JP12-2000	23 [584.2]	22.313 [566.8]	21.125 [536.6]	.875 [22.2]

Series JP052000, JP062000, JP112000, JP122000

DIMENSIONS ARE FOR REFERENCE ONLY Inch (mm)

* Please visit the product pages on our website for the most up-to-date product information

LONG FRAME (1/4") MODULAR 3 ROW JACK PANELS

Four series of cross-connect jack panels are available in 19" and 23" widths. Individual modules are easily dismounted from the front. On special order, panels can be supplied with a variety of standard telephone jacks.

SERIES JP312000 AND JPD312000

2.655" x 19" size for console, rack or control panel mounting. Mounts 24 twin jacks and 24 single jacks. Openings are on .625" centers in each row. A twin plug fits jacks horizontally or vertically in same quad. Bottom row has 24 single jacks. Two Kwik®-Change designation strips are supplied. Series JPD31 has pre-drilled and countersunk holes for mounting vertical designation strips. See "ORDERING".

SERIES JP322000 AND JPD322000

Same as JP312000 and JPD312000, except 23" wide (includes 14 inserts which accommodate 28 twin jacks and 28 single jacks).

MODULE INSERTS

Available with 6 holes or blank faces. See "ORDERING" for colored modules.

ORDERING

Order basic assemblies by part number from table. On special order, various combinations of colored inserts mounted in basic panels, as well as many types of complete assemblies are possible. Provide complete details with your inquiry or order.

Standard mount panels are available with holes pre-drilled for vertical designation strips, Series DS320. Add prefix "D" to part number (JPD312000, JPD322000, etc.). Refer to "DESIGNATION STRIPS".

Mounting Screws: #6-32 **P10725** for jack mounting and #4-40 **P2435** for insert mounting can also be ordered separately. Contact Switchcraft.



SPECIFICATIONS

Panel and Designation Strips: Aluminum alloy, extruded. Black anodized per MIL-A-8625.
Module Insert: Molded plastic, matte finish. Black standard; white, red, green, blue or yellow available on special order.
Marking Strip: White matte finish plastic.
Designation Strip Cover: Extruded clear plastic.
Screws: #6-32 x 5/16" PHMS, for jack mounting; #4-40 x 1/2" phillips FHMS, for module insert mounting.

Part Number	Description
JP312000	19" wide x 2.625" high panel with 12 black modules installed. Two, full width Kwik® -Change designation strips are included.
JPD312000	Same as JP312000, except holes pre-drilled for mounting vertical designation strips at each side.
JP322000	23" wide x 2.625" high panel with 14 black modules installed. Two, full width Kwik® -Change designation strips are included.
JPD322000	Same as JP322000, except holes pre-drilled for mounting vertical designation strips at each side.

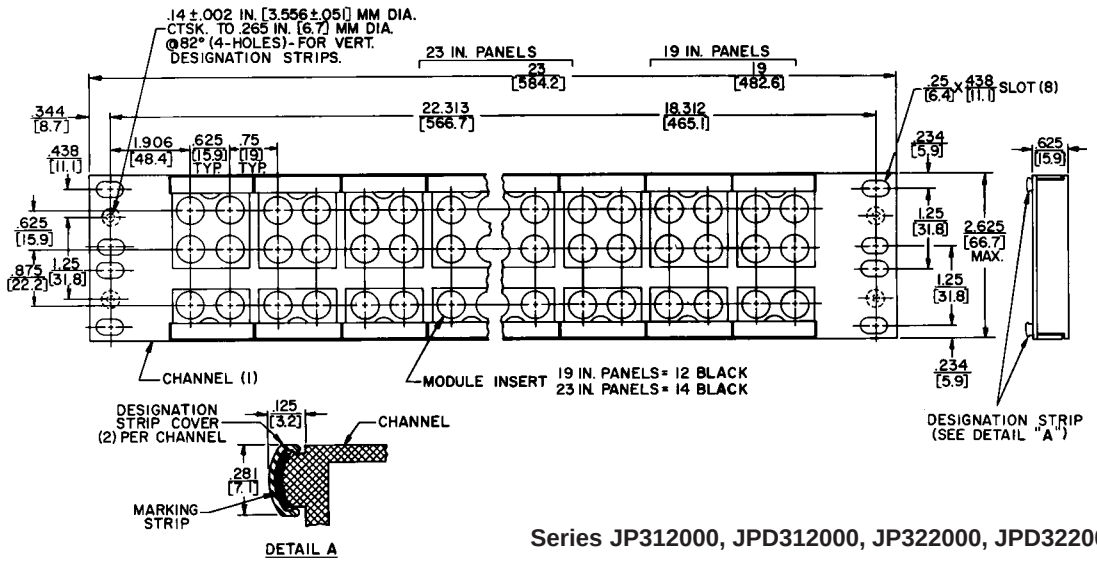

Series JP312000, JPD312000, JP322000, JPD322000

DIMENSIONS ARE FOR REFERENCE ONLY Inch (mm)

® Registered trademark of Switchcraft, Inc.
Note: Contact your Switchcraft Representative for price and delivery

* Please visit the product pages on our website for the most up-to-date product information

TT-JAX® (.173") JACK PANELS SERIES 1600, A1600, B1600, C1600

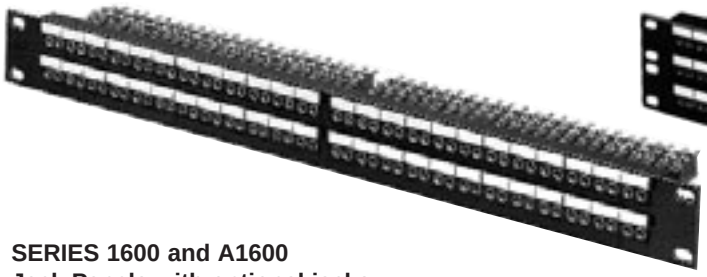

SERIES 1600 and A1600
Jack Panels with optional jacks.
(See next page for specific part numbers.)

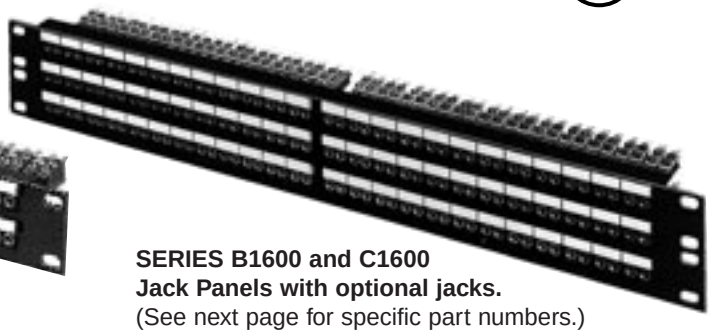

SERIES B1600 and C1600
Jack Panels with optional jacks.
(See next page for specific part numbers.)



SERIES 1700
Jack Panel
with optional jacks.
(See next page for specific part numbers.)

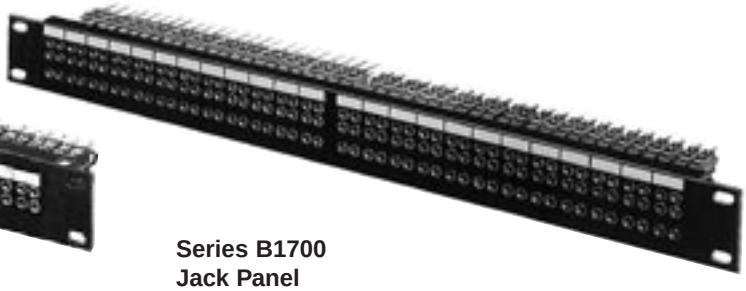

Series B1700
Jack Panel
with optional jacks.
(See next page for specific part numbers.)

SERIES 1600 DOUBLE ROW JACK PANELS

Black anodized panel has four inserts (24 single jacks). Double row configuration accommodates 96 total jacks (48 pairs). Jack spacing eliminates cross-patching of adjacent circuits when twin plugs are used. Panel size: 1.75" x 19". Four, Kwik-Change® designation strips for circuit identification supplied.

SERIES A1600 DOUBLE ROW JACK PANELS

Similar to Series 1600, except mounts 104 jacks. Jacks are spaced on .312" centers for maximum jack density. Four, Kwik-Change® designation strips supplied.

SERIES B1600 THREE ROW JACK PANELS

2.625" x 19" panel size yields high density (144 jacks). Jacks are paired for single or twin plugs without cross-patching. Six, Kwik-Change® designation strips supplied.

SERIES C1600 THREE ROW JACK PANELS

Similar to B1600, except maximum jack density (156 jacks). Six, Kwik-Change® designation strips supplied.

SERIES 1700 TWIN ROW JACK PANELS

Standard 1.75" x 19" panel accepts 48 TT-Twin-Jax® jacks. Two, Kwik-Change® designation strips supplied.

SERIES B1700 THREE ROW JACK PANELS

Accepts 48 Tri-Jax® with alternate mounting centers to eliminate cross-patching between adjacent circuits. Panel size: 1.75" x 19". Two, Kwik-Change® designation strips supplied.

SPECIFICATIONS

SERIES 1600, A1600, B1600, 1700, B1700

Panel and Designation Strip: Aluminum alloy, extruded. Per QQ-A-200/8. Black anodized per MIL-A-8625C. Black thermoplastic UL 94V-0.
Panel Insert: Thermoplastic polyester, UL 94V-0.
Marking Strip: White matte finish plastic.
Designation Strip Cover: Extruded clear plastic.

ORDERING

1. Part number tables list jack panels with the most commonly used jack circuits. Custom jack panels can be built on special order to OEM requirements. Typical special order features are:
   - Lamp jack with incandescent or LED lamps.
   - Solder lug or wire-wrapping terminals.
   - Pre-printed designation strips.
   - TT-Switch® switches with wide switching selection.
2. Contact Switchcraft for all special order items.

SPECIFYING NOTE:

Prefix letter “D” on part number indicates panels are drilled for mounting vertical designation strips on both ends. EXAMPLE - D1600, AD1632B, WCD1634B (vertical designation strips not included). Order DS321 for 1.734" high panels; DS350 for 2.069" high panels. See “Designation Strips” section.
The most commonly-used combinations of panels and jacks are listed on following page. 1600, A1600, B1600, C1600 panels can be assembled with many different “bantam type” jacks.

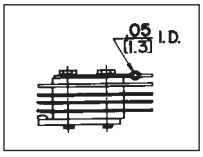

Bussing type terminals which allow you to buss jacks quickly and easily are available on special order.

DIMENSIONS ARE FOR REFERENCE ONLY Inch (mm)

* Please visit the product pages on our website for the most up-to-date product information

TT-JAX® (.173") JACK PANELS – SERIES 1600, A1600, B1600, C1600 (continued)

Jack Data[1]	Panel Data

SERIES 1600 AND A1600

Part Number	Part Number	Quantity	Dimensions	Mount
1600	w/o Jacks[1]	96	19" x 1.734"	Standard
D1600	w/o Jacks[1]			
1632A	TT32A			
D1632A	TT32A			
1632B	TT32B			
D1632B	TT32B			
W1632B	WTT32B			
WD1632B	WTT32B			
1634B	TT34B			
D1634B	TT34B			
W1634B	WTT34B			
WD1634B	WTT34B			
A1600	w/o Jacks[1]	104		
AD1600	w/o Jacks[1]			
A1632B	TT32B			
AD1632B	TT32B			
A1634B	TT34B			
AD1634B	TT34B			
WA1634B	WTT34B			
WAD1634B	WTT34B			

SERIES B1600

Part Number	Part Number	Quantity	Dimensions	Mount
B1600	w/o Jacks[1]	144	19" x 2.609"	Standard
BD1600	w/o Jacks[1]			
B1632B	TT32B			
BD1632B	TT32B			
B1634B	TT34B			
BD1634B	TT34B			
WBD1634B	WTT34B			
B1650	Note 2			
BD1650	Note 2			
WB1650	Note 3			
WBD1650	Note 3			

1. Accepts indicated number of single TT-Jax®, TT-Switches®, TT-Lamp-Jax® or any combination.
2. Three-row panel assembly with 96 TT34B Jax (top 2 rows); and 48 TT32B Jax (bottom row).
3. Same as Note 2 above, except jacks have wire-wrapping terminals.
4. Accepts 48 TT Twin-Jax®.
5. Accepts 48 TT Tri-Jax®.

◊ Special order only; contact Switchcraft.

Jack Data	Panel Data

SERIES C1600

Part Number	Part Number	Quantity	Dimensions	Mount
C1600	w/o Jacks[1]	156	19" x 2.609"	Standard
CD1600	w/o Jacks[1]			
C1634B	TT34B			
CD1634B	TT34B			
WC1634B	WTT34B			
WCD1634B	WTT34B			

SERIES 1700

Part Number	Part Number	Quantity	Dimensions	Mount
1700	w/o Jacks[4]	48 Twin-Jax®	19" x 1.734"	Standard
D1700	w/o Jacks[4]			
1789	TT89			
D1789	TT89			
W1789	WTT89			
WD1789	WTT89			

SERIES B1700

Part Number	Part Number	Quantity	Dimensions	Mount
B1700	w/o Jacks[5]	48 Tri-Jax®	19" x 1.734"	Standard
BD1700	w/o Jacks[5]			
B1795	TT95			
BD1795	TT95			
WB1795	WTT95			
WBD1795	WTT95			
B1796	TT96			
BD1796	TT96			
WB1796	WTT96			
WBD1796	WTT96			

PANEL INSERTS

Part Number	Insert Description	For Panels
TT505	Without jacks, 24 holes	A1600, B1600
◊TT506	Blank	1600, B1600, C1600
◊TT507	Without jacks, 48 holes	1700
◊TT508	Blank	1700
◊TT509	Without jacks, 26 holes	A1600, C1600
◊TT511	Without jacks, 72 holes	B1700

DIMENSIONS ARE FOR REFERENCE ONLY Inch (mm)

® Registered trademark of Switchcraft, Inc.
Note: Contact your Switchcraft Representative for price and delivery

* Please visit the product pages on our website for the most up-to-date product information

TT-JAX® (.173") JACK PANELS –SERIES 1600, A1600, B1600, C1600 (continued)

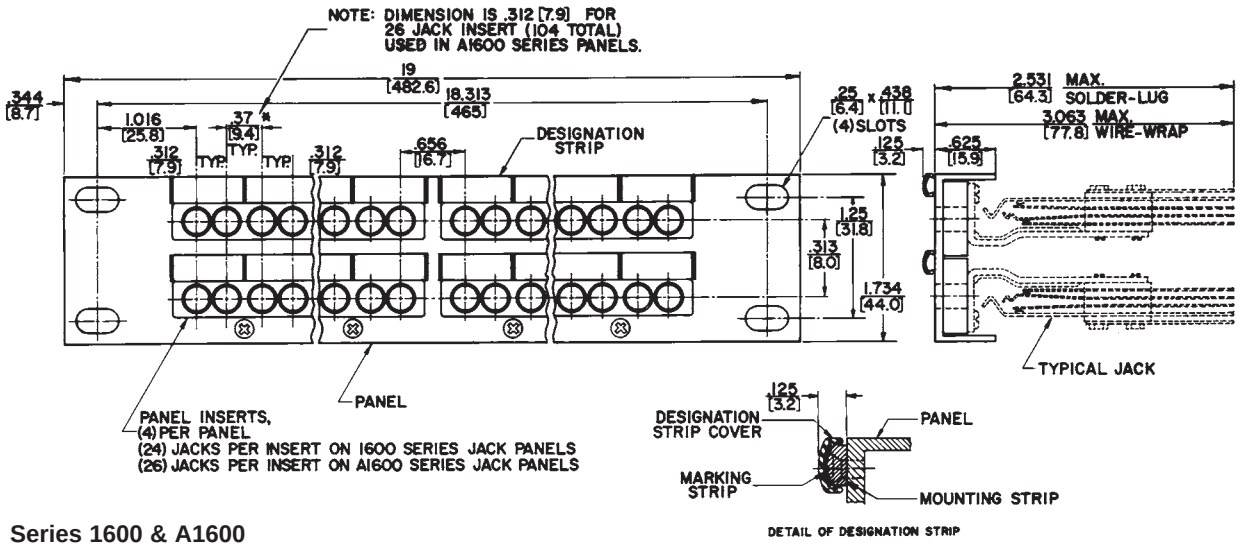

Series 1600 & A1600

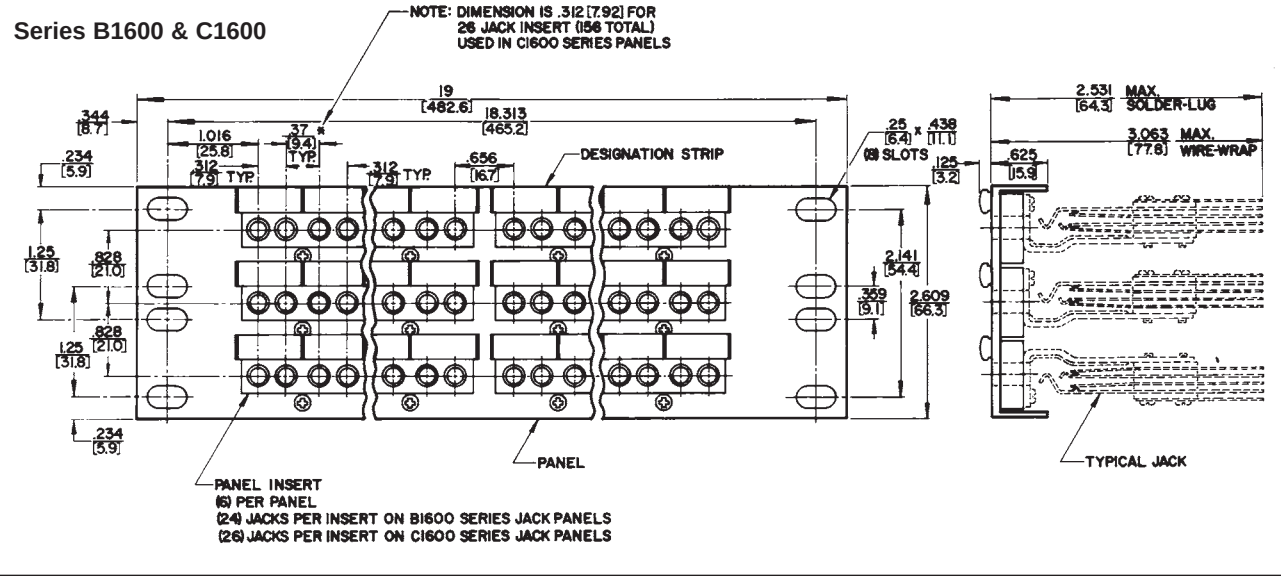

DIMENSIONS ARE FOR REFERENCE ONLY Inch (mm)

* Please visit the product pages on our website for the most up-to-date product information

TT-JAX® (.173") JACK PANELS – SERIES 1600, A1600, B1600, C1600 (continued)

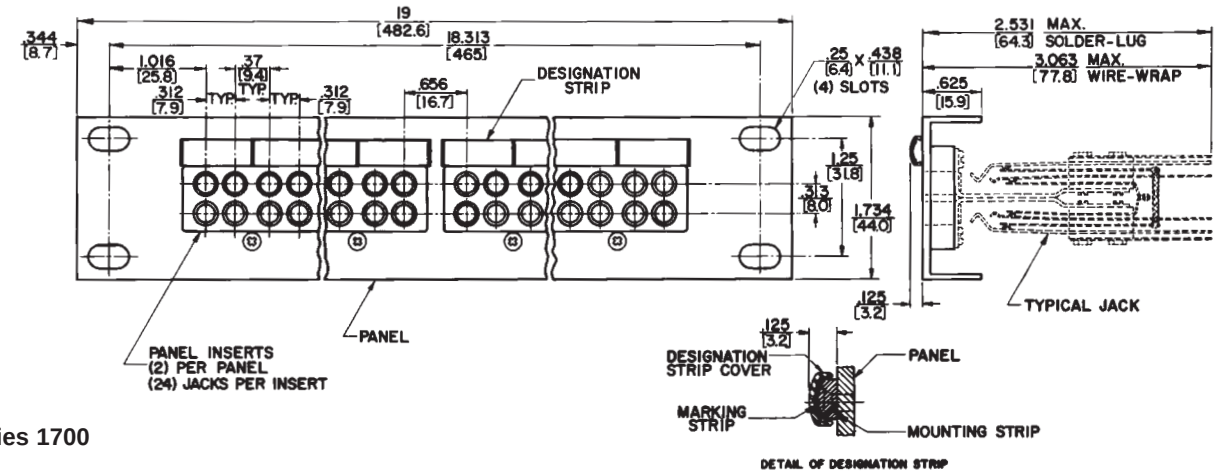

Series 1700

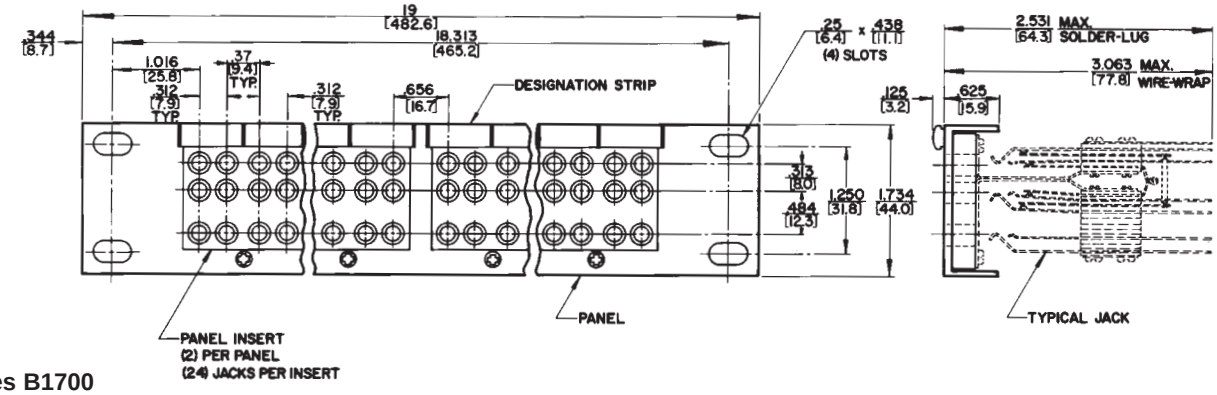

Series B1700

DIMENSIONS ARE FOR REFERENCE ONLY Inch (mm)

® Registered trademark of Switchcraft, Inc.
Note: Contact your Switchcraft Representative for price and delivery

* Please visit the product pages on our website for the most up-to-date product information

MODULAR TT-JAX® (.173") PANELS - BLANK SERIES TT51, TT53, TT56, TT59



SERIES TT56



SERIES TT51



SERIES TT59



SERIES TT53

Ten series of blank panels are available in 19" and 23" widths, standard or flush mounting, and double, twin or three row configurations. OEM's can order blank components and individual modules, jacks, switches and lamp jacks for production line assembly according to standard or special front panel configurations. Kwik-Change® designation strips are supplied with panels for custom legend marking.
Flush mounting styles can use extension legs (on special order), for stand-off mounting from front of rack. Contact Switchcraft for Mounting Bracket Kit K107.

SPECIFICATIONS

Panel and Designation Mounting Strip: Aluminum alloy, extruded per QQ-A-200/8. Black anodized per MIL-A-8265C.
Marking Strip: Matte finish white plastic.
Designation Strip Cover: Extruded clear plastic.

SPECIFYING NOTE: Part numbers in table are for blank panels only.

ORDERING

1. Order by part number from table
2. Refer to jack section to specify other jacks and components.

Series Number[1]	Description[2]
TT51	19" double row standard mount panel. Mounts 96 single jacks on 24 modules.
TT53	19" three row standard mount panel. Mounts 48 Tri-Jax® jacks on 24 modules.
TT54	23" three row standard mount panel. Mounts 56 Tri-Jax® jacks on 28 modules.
TT55	19" double row flush mount panel. Mounts 96 single jacks on 24 modules.
TT56	23" double row flush mount panel. Mounts 112 single jacks on 28 modules.
TT58	23" three row flush mount panel. Mounts 56 Tri-Jax® jacks on 28 modules.
TT59	19" twin row standard mount panel. Mounts 48 TT Twin-Jax® jacks on 24 modules.
TT60	23" twin row standard mount panel. Mounts 56 TT Twin-Jax® jacks on 28 modules.
TT61	19" twin row flush mount panel. Mounts 48 TT Twin-Jax® jacks on 24 modules.
TT62	23" twin row flush mount panel. Mounts 56 TT Twin-Jax® jacks on 28 modules.

◊ Special order only. Contact Switchcraft.
1. Prefix TTD for standard mounting panels indicates predrilled holes for mounting "X Wide" vertical designation strips. See "Designation Strips" section.
2. Each panel includes integral designation mounting strip, marking strips and clear plastic covers.
3. Contact Switchcraft for any special order items.

DIMENSIONS ARE FOR REFERENCE ONLY Inch (mm)

* Please visit the product pages on our website for the most up-to-date product information

TT MODULE INSERTS – SERIES TT91, TT92 AND TT93

SERIES TT91 **SERIES TT92** **SERIES TT-93**



TT91402 (black, 4 hole) **TT91202** (black, 2 hole) **TT91002** (black, blank) **TT92402** (black, 4 hole) **TT92202** (black, 2 hole) **TT92002** (black, blank) **TT93602** (black, 6 hole) **TT93302** (black, 3 hole) **TT93002** (black, blank)

Module colors are black or gray (standard); red, green, blue, white and yellow available on special order. Each module has a matte finish front surface and includes two mounting screws (Switchcraft P2348).

SERIES TT91

Choice of blank, two- or four-hole modules for double row panels Series TT51, TT55 and TT56. The following components are used with Series TT91 modules:

1. Front mount TT-Jax® jacks.
2. Front mount TT-Switch® switches Series TT300FM and WTT420FM.
3. Front mount TT Lamp Jax® lamp jacks TT420FM and WTT420FM.

SERIES TT92

Blank, two- or four-hole modules for twin row panels Series TT59, TT60, TT61 and TT62. TT Twin-Jax® jacks are used with these modules.

SERIES TT93

Blank, three- or six-hole modules for three row panels Series TT53, TT54, TT57 and TT58. Tri-Jax® jacks are used with these modules.

SPECIFICATIONS

Module: Precision molded thermosetting plastic in colors.
Mounting Screws: Black zinc, #3-48 x .312" flat head machine screws.

ORDERING

1. Order by part number from tables.
2. Contact Switchcraft for any special order items.

SPECIFYING NOTE: The part numbers listed on this page are for modules only. Refer to following page for specifying panel assemblies with components installed.

SERIES TT91 (For Double Row Panels)

Color	Openings		
	4	2	Blank
Red	TT91401	◊TT91201	TT91001
Black	◊TT91402	◊TT91202	◊TT91002
Green	TT91403	◊TT91203	TT91003
Blue	TT91404	◊TT91204	TT91004
White	TT91405	◊TT91205	TT91005
Yellow	TT91408	◊TT91208	TT91008
Gray	TT91411	TT91211	TT91011

SERIES TT92 (For Twin Row Panels)

Color	Openings		
	4	2	Blank
Red	TT92401	◊TT92201	TT92001
Black	◊TT92402	TT92202	◊TT92002
Green	TT92403	◊TT92203	TT92003
Blue	TT92404	◊TT92204	TT92004
White	TT92405	◊TT92205	TT92005
Yellow	TT92408	◊TT92208	TT92008
Gray	TT92411	TT92211	TT92011

SERIES TT93 (For Three Row Panels)

Color	Openings		
	4	2	Blank
Red	TT93601	◊TT93301	TT93001
Black	TT93602	TT93302	TT93002
Green	TT93603	◊TT93303	TT93003
Blue	TT93604	◊TT93304	TT93004
White	TT93605	◊TT93305	TT93005
Yellow	TT93608	◊TT93308	TT93008
Gray	TT93611	TT93311	TT93011

◊ Special order only; contact factory for price and delivery.

DIMENSIONS ARE FOR REFERENCE ONLY Inch (mm)

® Registered trademark of Switchcraft, Inc.
Note: Contact your Switchcraft Representative for price and delivery

* Please visit the product pages on our website for the most up-to-date product information

MODULAR TT-JAX® (.173") JACK PANELS – SERIES TT5102000, TT5202000, TT5502000, TT5602000

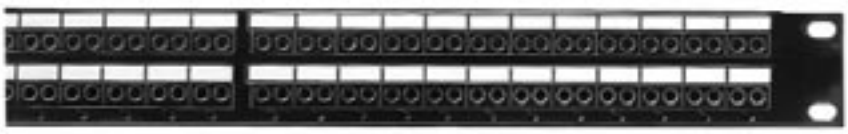

Series TT5102000, TT5202000 (Typical)



Series TT5502000, TT5602000 (Typical) Shown w/mounting bracket K107 (not supplied).

SERIES TT5102000*

Modular double row, 1.75" high x 19" wide, standard mount. Supplied with 24 black modules, designation strips, and covers. Mounts 96 TT-Jax® single jacks, lamp jacks and/or switches.

SERIES TT51020001*

Modular double row, 1.75" high x 19" wide, standard mount. Supplied with 24 black modules, designation strips, and covers. Mounts 96 TT-Jax® single jacks, lamp jacks and/or switches. Comes supplied with cable tie bar.

SERIES TT5202000*

Similar to TT5102000, except 23" wide. Supplied with 28 black modules, designation strips, and covers. Mounts 112 TT-Jax® single jacks, jack lamps and/or switches.

SERIES TT5502000

Modular double row, 1.75" high x 19" wide, flush mount. Supplied with 24 black modules, designation strips, and covers. Panels can be mounted flush with rack/control panel surface, or use with extension legs for standoff mounting with easy access to rear of jacks for testing/monitoring. Mounts 96 TT-Jax® single jacks, lamp jacks and/or switches.

SERIES TT5602000

Similar to TT5502000, except 23" wide. Supplied with 28 black modules, designation strips, and covers. Mounts 112 TT-Jax® single jacks, jack lamps and/or switches.

ORDERING

1. Order part number from table
2. Contact Switchcraft for any special order items.
3. Separate components can be ordered.

* Prefix TTD indicates panel is pre-drilled with countersunk holes for mounting “X-Wide” vertical designation strips. See “DESIGNATION STRIPS” section.

	Jack Data		Panel Data		
Part Number	**Part Number**	**Qty.**	**Width**	**Mount**	**Modules**
TT5102000	without jacks	0	19"	Standard	24 (Black)
◊**TT5102S31**	TT31FM	96			
◊**TT5102W31**	WTT31FM				
TT5102S32A	TT32AFM				
TT5102W32A	WTT32AFM				
TT5102S32B[2]	TT32BFM				
TT5102W32B	WTT32BFM				
◊**TT5102S33B**	TT33BFM				
◊**TT5102W33B**	WTT33BFM				
TT5102S34B[2]	TT34BFM				
TT5102W34B	WTT34BFM				
TTD5102000	without jacks	0			
TTD5102S31 Through TTD5102W34B	Note[1]	96			
TT5202000 TTD5202000	without jacks	0	23"	Standard	28 (Black)
TT5202S31 Through TT5202W34B	Note[1]	112			
TTD520231 Through TTD5202W34B	Note[1]				
TT552000	without jacks	0	19"	Flush	24 (Black)
TT5502S31 Through TT5502W34B	Note[1]	96			
TT5602000	without jacks	0	23"	Flush	28 (Black)
TT5602S31 Through TT5602W34B	Note[1]	112			

◊ Special order only; contact Switchcraft for price and delivery.
1 Complete panel part number with jacks installed can be constructed as shown for Series TT51.
2. Add a “1” to part number to specify cable tie bar.

DIMENSIONS ARE FOR REFERENCE ONLY Inch (mm)

* Please visit the product pages on our website for the most up-to-date product information

MODULAR TT-JAX® (.173") JACK PANELS – SERIES TT5102000, TT5202000, TT5502000, TT56020000 (continued)

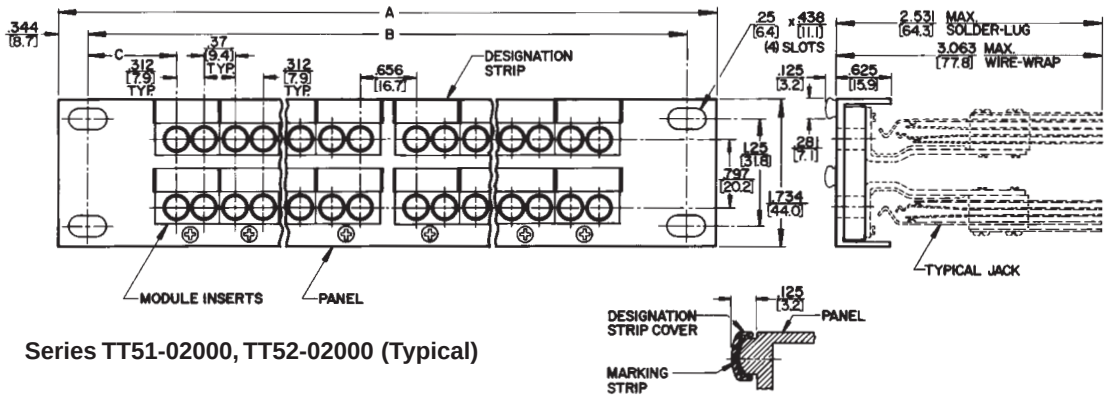

Series TT51-02000, TT52-02000 (Typical)

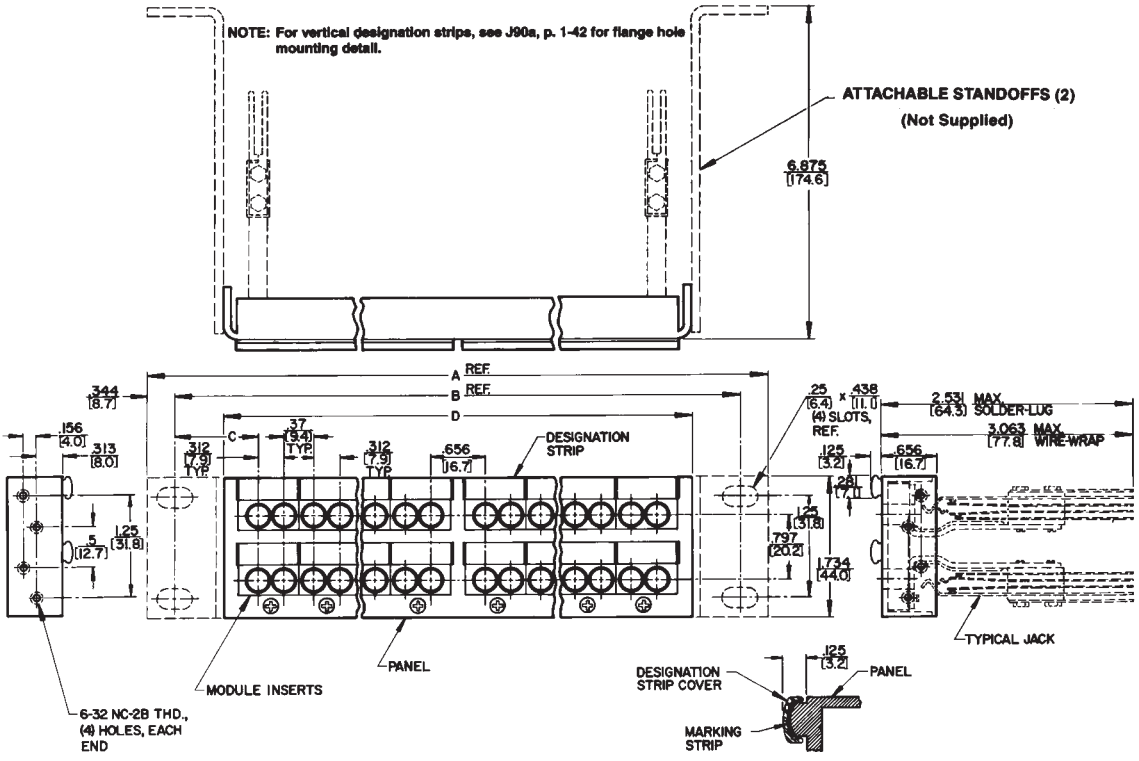

Series TT55-02000, TT56-02000 (Typical)

Jack Panel Dimensions - inch (mm)				
Series Number	A	B	C	D
TT51	19 (482.6)	18.3 (465.1)	1.013 (25.7)	-
◊TT52	23 (584.2)	22.3 (566.7)	1.648 (41.9)	-
TT55	19 (482.6)	18.3 (465.1)	1.013 (25.7)	17.125 (435)
TT56	23 (584.2)	22.3 (566.7)	1.648 (41.9)	21.125 (536.6)

◊ Special order only; contact Switchcraft for price and delivery.

DIMENSIONS ARE FOR REFERENCE ONLY Inch (mm)

® Registered trademark of Switchcraft, Inc.
Note: Contact your Switchcraft Representative for price and delivery

* Please visit the product pages on our website for the most up-to-date product information

TT-JAX® (.173") TWIN ROW AND THREE ROW JACK PANELS

Series TT5902000



Series TT6102000



Series TT5302000, TT5402000 (Typical)

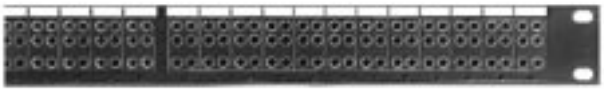

SERIES TT5902000*
Modular twin row, 1.75" high x 19" wide, standard mount. Supplied with 24 black modules, designation strips, and covers. Mounts 48 TT Twin-Jax® twin jacks.

SERIES TT6002000*
Similar to TT5902000, except 23" wide. Supplied with 28 black modules, designation strips, and covers. Mounts 56 TT Twin-Jax® twin jacks.

SERIES TT6102000
Modular twin row, 1.75" high x 19" wide, flush or standoff mount. Supplied with 24 black modules, designation strips, and covers. Mounts 48 TT Twin-Jax® twin jacks.

SERIES TT6202000
Similar to TT6102000, except 23" wide. Supplied with 28 black modules, designation strips, and covers. Mounts 56 TT Twin-Jax® twin jacks.

SERIES TT5302000*
Modular three row, 1.75" high x 19" wide, standard mount. Supplied with 24 black modules, designation strips, and covers. Designed for LINE, EQUIP and MONITOR patch connections. Mounts 48 Tri-Jax® triple jacks.

SERIES TT5402000*
Similar to TT5302000, except 23" wide. Supplied with 28 black modules, designation strips, and covers. Mounts 56 Tri-Jax® triple jacks.

SERIES TT5702000
Modular three row, 1.75" high x 19" wide, flush or standoff mount. Supplied with 24 black modules, designation strips, and covers. Mounts 48 Tri-Jax® triple jacks.

SERIES TT5802000
Similar to TT5702000, except 23" wide. Supplied with 28 black modules, designation strips, and covers. Mounts 56 Tri-Jax® triple jacks.

ORDERING
1. Order part number from table
2. Contact Switchcraft for any special order items.

*Prefix TTD indicates panel is pre-drilled with countersunk holes for mounting "X-Wide" vertical designation strips. See **"DESIGNATION STRIPS"** section.

Part Number	Jack Data		Panel Data		
	Part Number	Qty.	Width	Mount	Modules
TT5902000	without jacks	0	19"	Stan-dard	24 (Black)
TT5902S89	TT89FM	48			
TT5902W89	WTT89FM				
TTD5902000	without jacks	0			
TTD5902S89	TT89FM	48			
TTD5902W89	WTT89FM				
TT6002000 TTD6002000	without jacks	0	23"		
TT6002S89 TT6002W89	Note[1]	56			
TTD6002S89 TTD6002W89	Note[1]	56			
TT6102000	None	0	19"	Flush	28 (Black)
TT6102S89 TT6102W89	Note[1]	48			
TT6202000	without jacks	0	23"		
TT6202S89 TT6202W89	Note[1]	56			
TT5302000	without jacks	0	19"	Stan-dard	24 (Black)
◊TT5302S95	TT95FM	48			
TT5302W95	WTT95FM				
◊TT5302S96	TT96FM				
TT5302W96	WTT96FM				
TTD5302000	without jacks	0			
TTD5302S95 Through TTD5302W96	Note[2]	48			
TT5402000 TTD5402000	without jacks	0	23"	Stan-dard	28 (Black)
TT5402S95 Through TT5402W96	Note[2]	56			
TTD5402S95 Through TTD5402W96	Note[2]				
TT5702000	without jacks	0	19"	Flush	24 (Black)
TT5702S95 Through TT5702W96	Note[2]	48			
TT5802000	without jacks	0	23"	Flush	28 (Black)
TT5802S95 Through TT5802W96	Note[2]	56			

◊ Special order only; contact Switchcraft for price and delivery.
1. Complete panel part number with jacks installed can be constructed as shown for Series TT59 or TTD59.
2. Complete panel part number with jacks installed can be constructed as shown for series TT53.

DIMENSIONS ARE FOR REFERENCE ONLY Inch (mm)

* Please visit the product pages on our website for the most up-to-date product information

TT-JAX® (.173") TWIN ROW AND THREE ROW JACK PANELS (continued)

Series TT5902000 and TT6002000 (Typical)

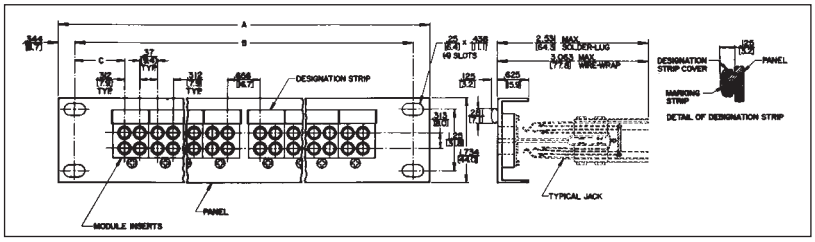

Jack Panel Dimensions - inch (mm)				
Series Number	A	B	C	D
TT59	19 (482.6)	18.3 (465.1)	1.013 (25.7)	-
TT60	23 (584.2)	22.3 (566.7)	1.648 (41.9)	-
TT61	19 (482.6)	22.3 (566.7)	1.013 (25.7)	17.125 (435)
TT62	23 (584.2)	22.3 (566.7)	1.648 (41.9)	21.125 (536.6)

Series TT6102000 and TT6202000 (Typical)

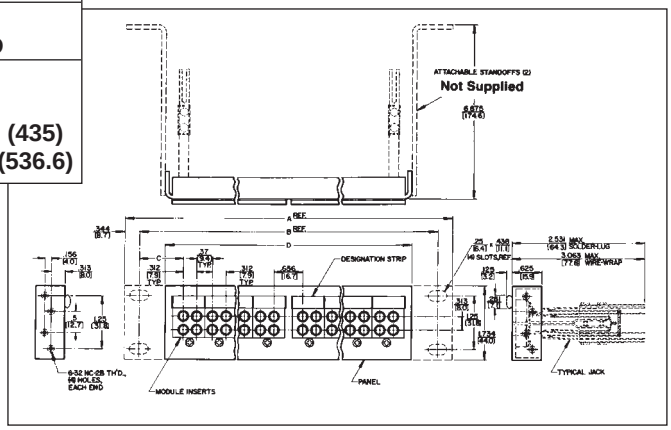

Series TT5302000 and TT5402000 (Typical)

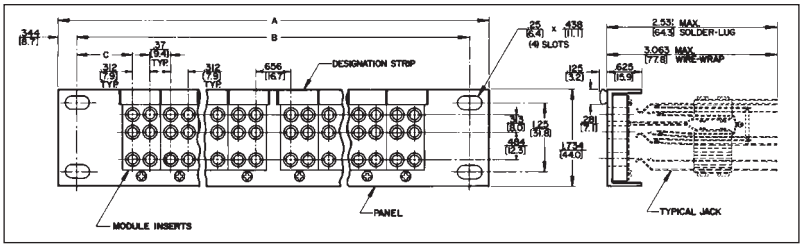

Jack Panel Dimensions - inch (mm)				
Series Number	A	B	C	D
TT53	19 (482.6)	18.3 (465.1)	1.013 (25.7)	-
TT54	23 (584.2)	22.3 (566.7)	1.648 (41.9)	-
TT57	19 (482.6)	22.3 (566.7)	1.013 (25.7)	17.125 (435)
◊TT58	23 (584.2)	22.3 (566.7)	1.648 (41.9)	21.125 (536.6)

Series TT5702000 and TT5802000 (Typical)

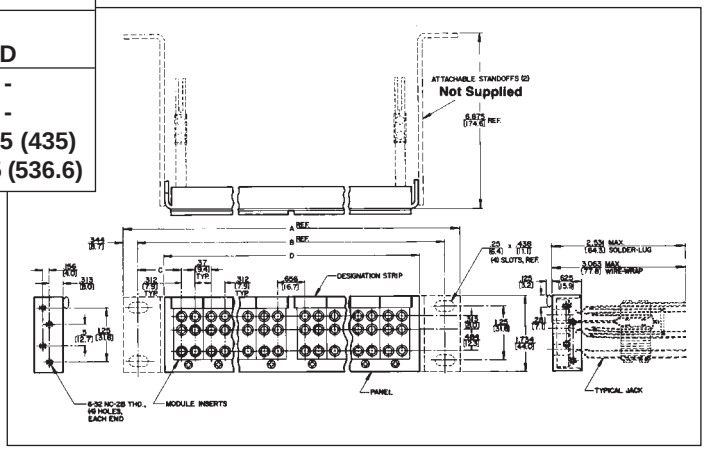

DIMENSIONS ARE FOR REFERENCE ONLY Inch (mm)

® Registered trademark of Switchcraft, Inc.
Note: Contact your Switchcraft Representative for price and delivery

* Please visit the product pages on our website for the most up-to-date product information

TT-JAX® (.173") CONNECTORIZED JACKFIELDS – SERIES TT, 2-WIRE, 4-WIRE, 6-WIRE

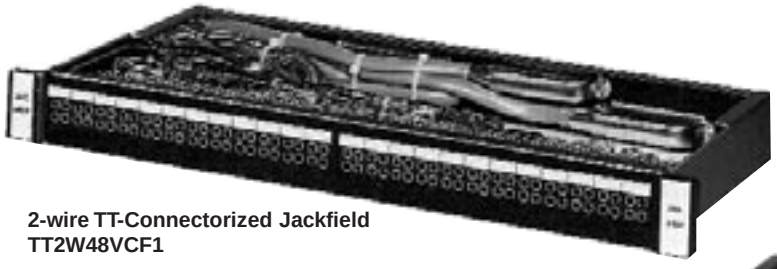

2-wire TT-Connectorized Jackfield
TT2W48VCF1

6-wire TT-Connectorized Jackfield



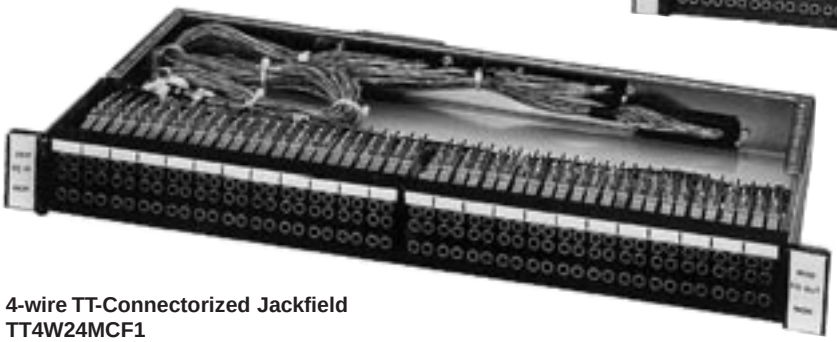

4-wire TT-Connectorized Jackfield
TT4W24MCF1

2-WIRE TT-CONNECTORIZED JACKFIELDS, SERIES TT

Contains 48, 2-wire circuits. Arrangements include: LINE-DROP or Signal E/M, or LINE-DROP-MON. Available with MONITOR jack row. On rear panel, LINE connectors are receptacles and DROP connectors are plugs. LINE and DROP circuits may be isolated from each other for separate monitoring. On special order, 48 circuits LINE/COMBINATION DROP/MON or 96 circuits, LINE/DROP or Signal E/M may be specified.

2-WIRE TT-CONNECTORIZED PC JACKFIELD, SERIES TTPC

Same as 2-Wire TT-connectorized jackfields above, except all connections are machine-soldered on a double-sided PC board instead of hand wired.

4-WIRE TT-CONNECTORIZED JACKFIELDS, SERIES TT

4-Wire jackfields have 24, 4-wire circuits for MOD-DEM/EQ IN-EQ OUT/MON patching, or may be used for other 4-wire patching applications. Can be supplied with or without MONITOR jack row. On rear panel, MOD AND EQ IN connectors are receptacles and DEM and EQ OUT connectors are plugs.

6-WIRE TT-CONNECTORIZED JACKFIELDS, SERIES TT

6-Wire jackfields contain 48, 6-wire circuits for MOD-DEM/EQ IN EQ OUT/MON/SIG LINE/SIG EQ patching with toll test boards. Available with or without MONITOR jack row. On rear panel, MOD, EQ IN and SIG LINE connectors are receptacles and DEM, EQ OUT and SIG EQ connectors are plugs. The following can be specified on special order: 12 circuits, DEM-MOD/EQ IN-EQ OUT/MON/SIG E/M; 48 circuits, signal E/M leads separated; 48 circuits for D3 channel banks.

ORDERING

1. Order by part number from tables.
2. Contact Switchcraft for any special order items.

DIMENSIONS ARE FOR REFERENCE ONLY Inch (mm)

* Please visit the product pages on our website for the most up-to-date product information

TT-JAX® (.173") CONNECTORIZED JACKFIELDS – SERIES TT, 2-WIRE, 4-WIRE, 6-WIRE (continued)

SPECIFICATIONS

Panel and Integral Designation Strip: Aluminum alloy, extruded per QQ-A-200/8. Black anodized per MIL-A-8265.
Modules: Precision-molded thermosetting plastic. Black standard. Other colors on special order.
Mounting Screws: Black zinc, #3-48 x 312" flat head machine screw.
TT-Jax® Jacks: See jacks section for TT-Jax® specifications.
Marking Strip: Matte finish white plastic.
Vertical Designation Strip: Extruded aluminum, black anodized.
Back Frames: Cold rolled steel, zinc-plated with iridescent tarnish-resistant finish.
Screws, Nuts and Lockwashers: Steel, clear iridite tarnish-resistant finish over zinc-plating.
Connectors: 50-pin micro/pierce plugs and receptacles.
Cable Tie Bar: Aluminum hexagon alloy. 6061-T6, clear iridite finish per MIL-C-5541 (not hinged versions only).
Cables: 25 pair, 24 AWG solid copper wire, tinned and annealed, covered with insulating grade thermoplastic jacket.
Cable Ties: Thermoplastic, locking-non-releaseable, 30 pounds minimum loop tensile strength.

2- & 4-Wire Connectorized Jackfields
(4-Wire Style Shown)

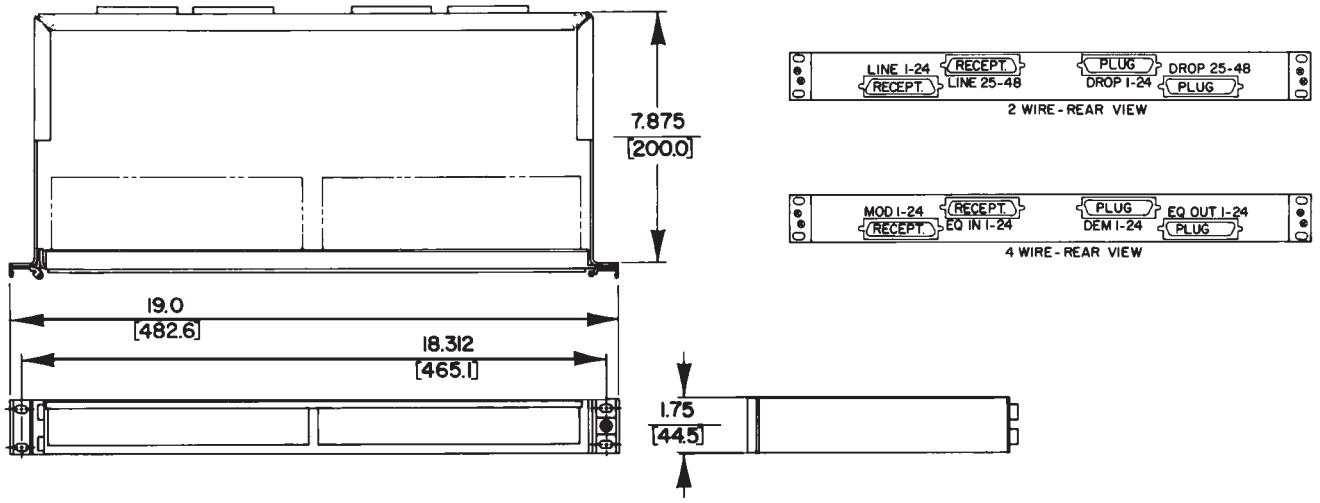

DIMENSIONS ARE FOR REFERENCE ONLY Inch (mm)

® Registered trademark of Switchcraft, Inc.
Note: Contact your Switchcraft Representative for price and delivery

* Please visit the product pages on our website for the most up-to-date product information

TT-JAX® (.173") CONNECTORIZED JACKFIELDS (continued)

PART NUMBERS

1. Compose part numbers from data below to specify your jackfield...or use the table to order popular jackfields.

SPECIFYING NOTE: Any jackfield can be manufactured with AMP CHAMP connectors. Contact Switchcraft.

T	T	2	W	2	4	V	C	F	1

JACK TYPE
TT - .173"
JP - LONG FRAME (1/4")

UNIT TYPE
2W - 2 WIRE
4W - 4 WIRE
6W - 6 WIRE

NUMBER OF CIRCUITS
12
24
48
96

MONITOR JACK
V - WITHOUT
M - WITH

WIRE TERMINATION
C - AMPHENOL BLUE RIBBON
B - AMP CHAMP
W - TERMINAL BLOCK

TYPE OF HINGE
F - FRONT PANEL HINGED
R - REAR PANEL HINGED
N - NON-HINGED

RACK MOUNTING
1 - 19 inch
2 - 23 inch

TYPICAL PART NUMBERS

2-WIRE JACKFIELDS	
Part Number	**Description**
TT2W48VCF1	Hinged front panel.
TT2W48VCN1	Front panel NOT hinged.
TT2W48MCF1	Same as TT2W48VCF1, except with MONITOR jack row.
TT2W48MCN1	Same as TT2W48VCN1, except with MONITOR jack row.
4-WIRE JACKFIELDS	
Part Number	**Description**
TT4W24MCF1	Hinged front panel with MONITOR jack row.
TT4W24MCN1	Front panel NOT hinged with MONITOR jack row.
TT4W24VCF1	Same as TT4W24MCF1, except no MONITOR jack row.
TT4W24VCN1	Same as TT4W24MCN1, except no MONITOR jack row.
6-WIRE JACKFIELDS	
Part Number	**Description**
TT6W48MCF1	Hinged front panel with MONITOR jack row.
16J1055	Hinged front panel with MONITOR jack row.
TT6W48MCN1	Front panel NOT hinged with MONITOR jack row.
TT6W48VCF1	Same as TT6W48MCF1, except no MONITOR jack row.
TT6W48VCN1	Same as TT6W48MCN1, except no MONITOR jack row.

DIMENSIONS ARE FOR REFERENCE ONLY Inch (mm)

* Please visit the product pages on our website for the most up-to-date product information

TT-JAX® (.173") CONNECTORIZED JACKFIELDS (continued)

TYPICAL CIRCUIT ARRANGEMENTS - 2-WIRE

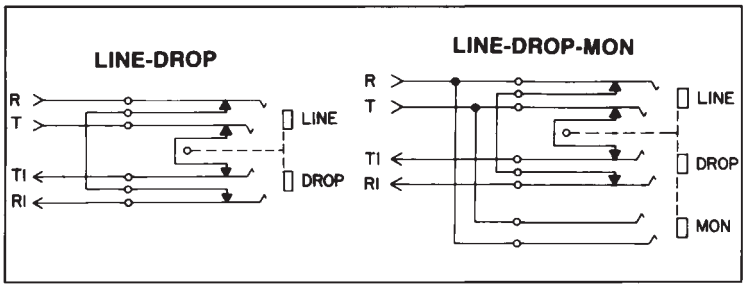

TYPICAL CIRCUIT ARRANGEMENTS - 4-WIRE

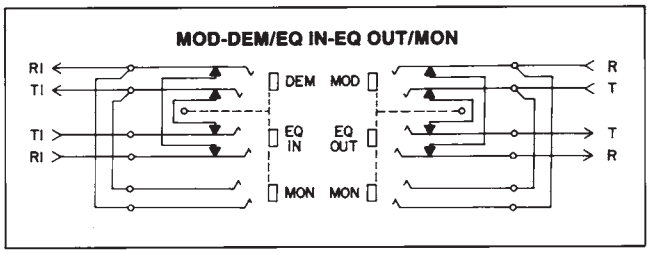

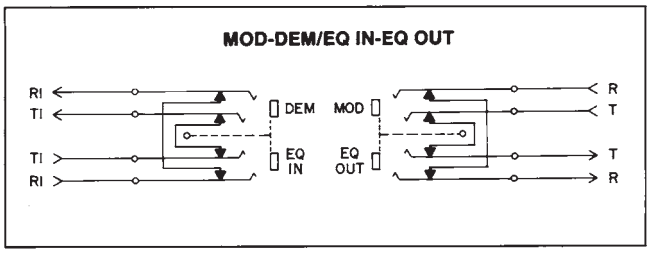

TYPICAL CIRCUIT ARRANGEMENTS - 6-WIRE

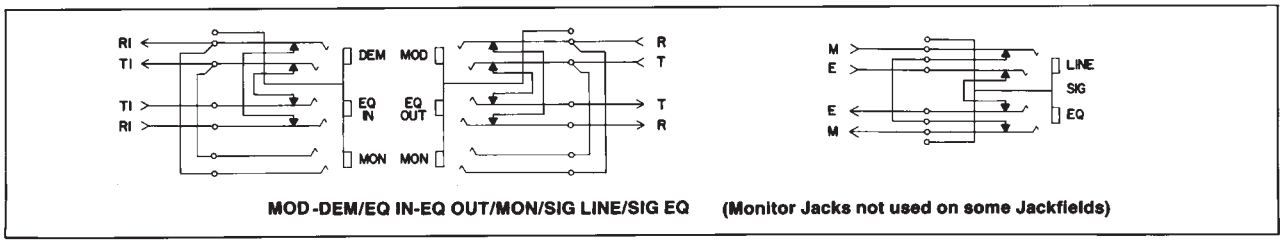

DIMENSIONS ARE FOR REFERENCE ONLY Inch (mm)

® Registered trademark of Switchcraft, Inc.
Note: Contact your Switchcraft Representative for price and delivery

* Please visit the product pages on our website for the most up-to-date product information

TT-JAX® (.173") CONNECTORIZED JACKFIELDS (continued)

No. TT2W48VCF1 (hinged)
No. TT2W48VCN1 (not hinged)
(Hinged version shown)

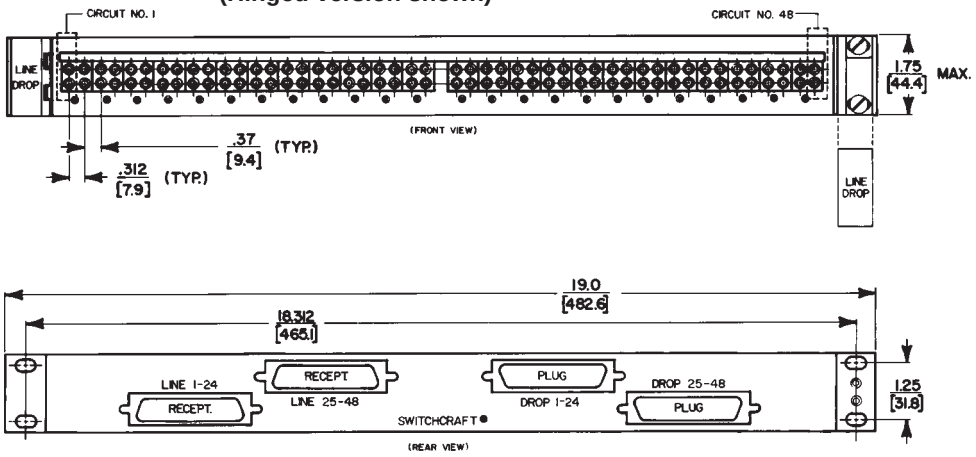

TYPICAL CIRCUIT ARRANGEMENT

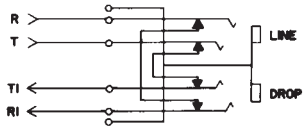

CONNECTION TABLE

TO PLUG CONNECTOR		PIN	TO RECEPTACLE CONNECTOR		PIN
CKT. 1	DROP	TI 26, RI 1	CKT. 1	LINE	T 26, R 1
REPEATED			REPEATED		
CKT. 24	DROP	TI 49, RI 24	CKT. 24	LINE	T 49, R 24
CKT. 25	DROP	TI 26, RI 1	CKT. 25	LINE	T 26, R 1
REPEATED			REPEATED		
CKT. 48	DROP	TI 49, RI 24	CKT. 48	LINE	T 49, R 24

No. TT2W48MCF1 (hinged)
No. TT2W48MCN1 (not hinged)
(Non-Hinged version shown)

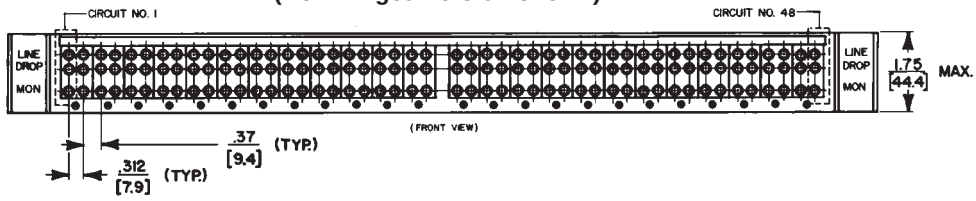

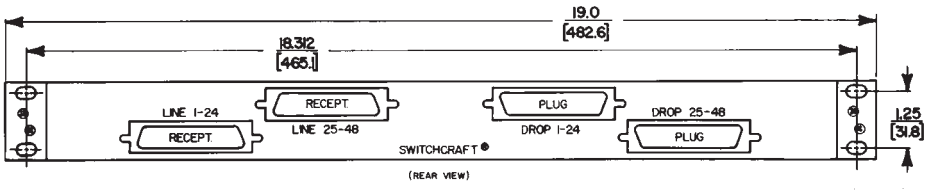

TYPICAL CIRCUIT ARRANGEMENT

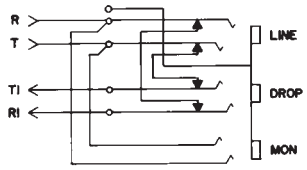

CONNECTION TABLE

TO PLUG CONNECTOR		PIN	TO RECEPTACLE CONNECTOR		PIN
CKT. 1	DROP	TI 26, RI 1	CKT. 1	LINE	T 26, R 1
REPEATED			REPEATED		
CKT. 24	DROP	TI 49, RI 24	CKT. 24	LINE	T 49, R 24
CKT. 25	DROP	TI 26, RI 1	CKT. 25	LINE	T 26, R 1
REPEATED			REPEATED		
CKT. 48	DROP	TI 49, RI 24	CKT. 48	LINE	T 49, R 24

DIMENSIONS ARE FOR REFERENCE ONLY Inch (mm)

* Please visit the product pages on our website for the most up-to-date product information

TT-JAX® (.173") CONNECTORIZED JACKFIELDS (continued)

No. TT4W24VCF1 (hinged)
No. TT4W24VCN1 (not hinged)
(Hinged version shown)

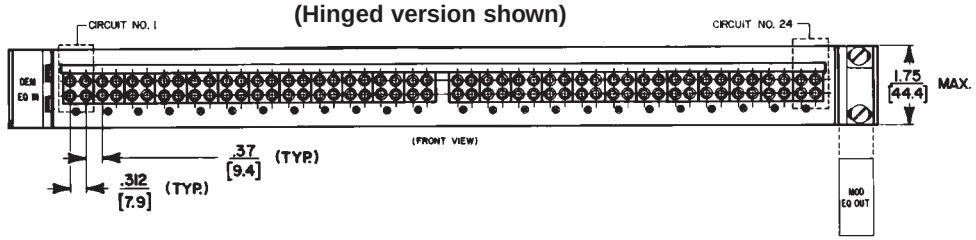

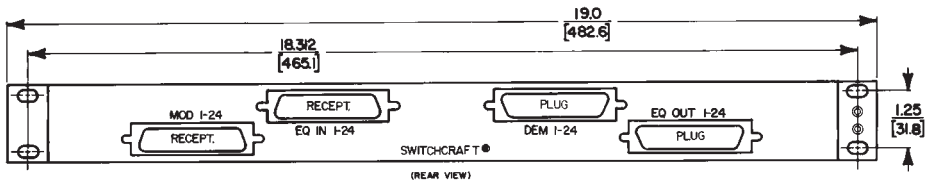

TYPICAL CIRCUIT ARRANGEMENT

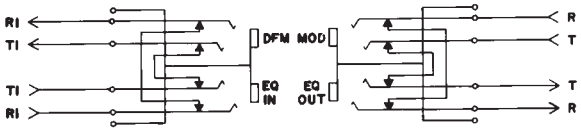

CONNECTION TABLE							
TO PLUG CONNECTOR			PIN	TO RECEPTACLE CONNECTOR			PIN
CKT. 1	DEM	T1	26	CKT. 1	MOD	T	26
		R1	1			R	1
REPEATED				REPEATED			
CKT. 24	DEM	T1	49	CKT. 24	MOD	T	49
		R1	24			R	24
CKT. 1	EQ OUT	T	26	CKT. 1	EQ IN	T1	26
		R	1			R1	1
REPEATED				REPEATED			
CKT. 24	EQ OUT	T	49	CKT. 24	EQ IN	T1	49
		R	24			R1	24

No. TT4W24MCF1 (hinged)
No. TT4W24MCN1 (not hinged)
(Non-Hinged version shown)

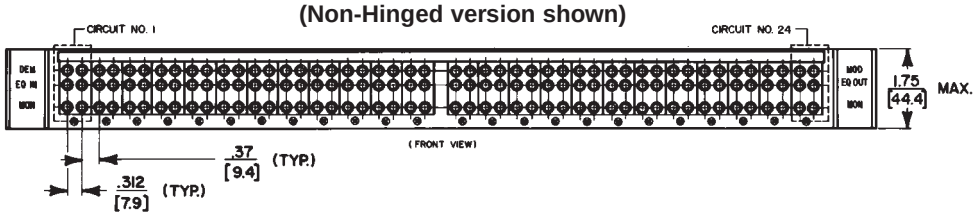

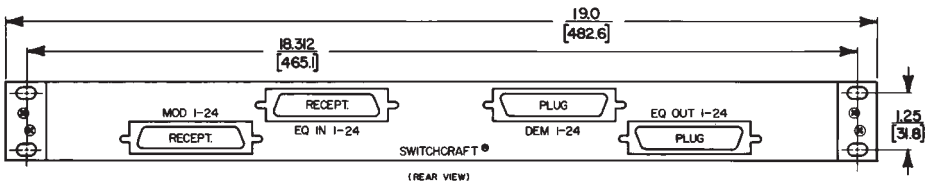

TYPICAL CIRCUIT ARRANGEMENT

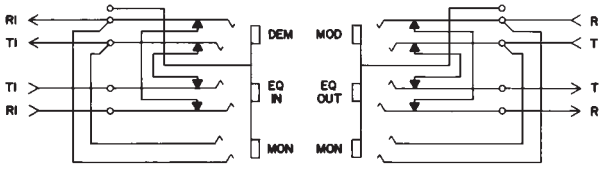

CONNECTION TABLE							
TO PLUG CONNECTOR			PIN	TO RECEPTACLE CONNECTOR			PIN
CKT. 1	DEM.	T1	26	CKT. 1	MOD.	T	26
		R1	1			R	1
REPEATED				REPEATED			
CKT. 24	DEM.	T1	49	CKT. 24	MOD.	T	49
		R1	24			R	24
CKT. 1	EQ. OUT	T	26	CKT. 1	EQ. IN	T1	26
		R	1			R1	1
REPEATED				REPEATED			
CKT. 24	EQ. OUT	T	49	CKT. 24	EQ. IN	T1	49
		R	24			R1	24

DIMENSIONS ARE FOR REFERENCE ONLY Inch (mm)

® Registered trademark of Switchcraft, Inc.
Note: Contact your Switchcraft Representative for price and delivery

* Please visit the product pages on our website for the most up-to-date product information

TT-JAX® (.173") CONNECTORIZED JACKFIELDS (continued)

No. TT6W48MCF1 (hinged)
No. TT6W48MCN1 (not hinged)
(Hinged version shown)

No. TT6W48VCF1 (hinged)
No. TT6W48VCN1 (not hinged)

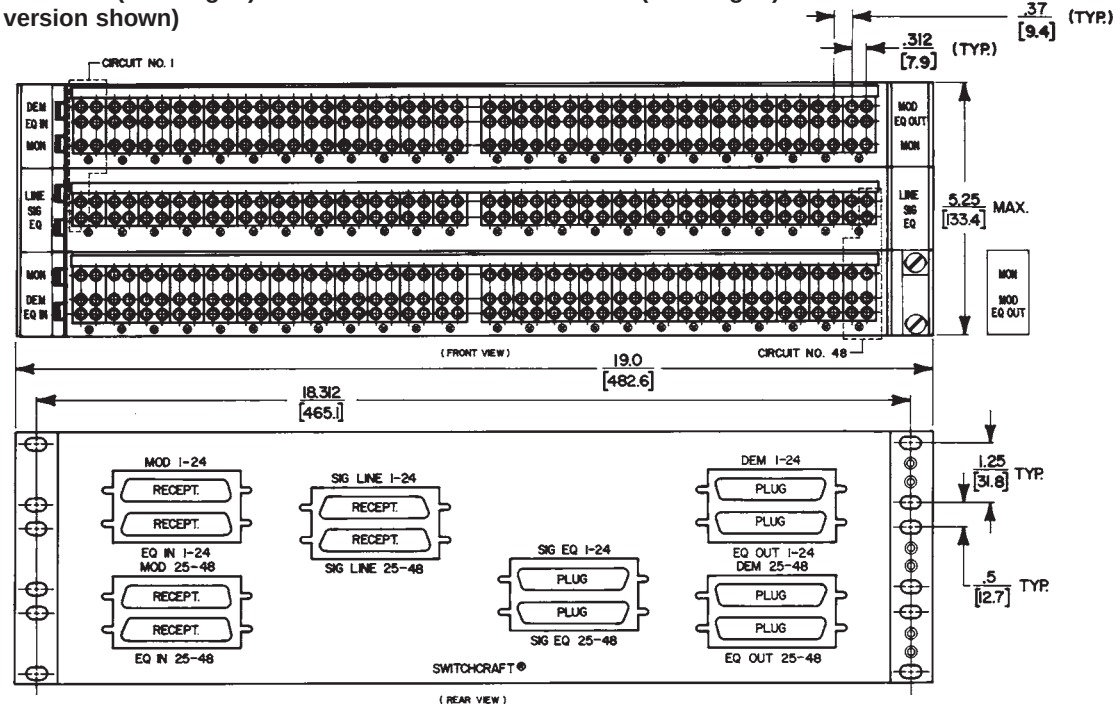

TYPICAL CIRCUIT ARRANGEMENT

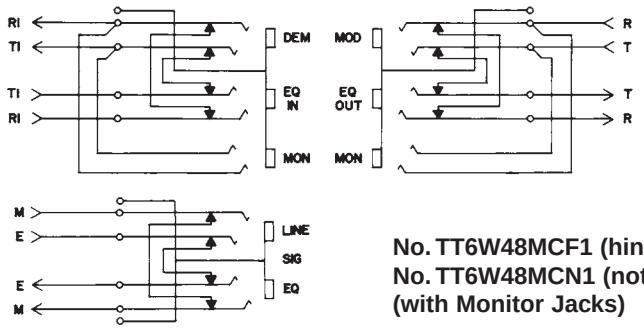

No. TT6W48MCF1 (hinged)
No. TT6W48MCN1 (not hinged)
(with Monitor Jacks)

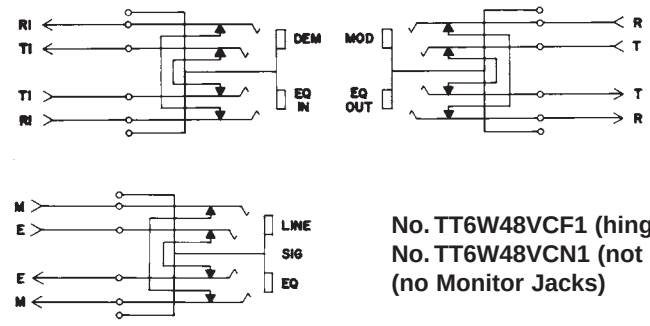

No. TT6W48VCF1 (hinged)
No. TT6W48VCN1 (not hinged)
(no Monitor Jacks)

CONNECTION TABLE

TO PLUG CONNECTOR		PIN		TO RECEPTACLE CONNECTOR		PIN	
CKT. 1	DEM.	TI	26	CKT. 1	MOD.	T	26
		RI	1			R	1
REPEATED				REPEATED			
CKT. 24	DEM.	TI	49	CKT. 24	MOD.	T	49
		RI	24			R	24
CKT. 25	DEM.	TI	26	CKT. 25	MOD.	T	26
		RI	1			R	1
REPEATED				REPEATED			
CKT. 48	DEM.	TI	49	CKT. 48	MOD.	T	49
		RI	24			R	24
CKT. 1	EQ. OUT	T	26	CKT. 1	EQ. IN	TI	26
		R	1			RI	1
REPEATED				REPEATED			
CKT. 24	EQ. OUT	T	49	CKT. 24	EQ. IN	TI	49
		R	24			RI	24
CKT. 25	EQ. OUT	T	26	CKT. 25	EQ. IN	TI	26
		R	1			RI	1
REPEATED				REPEATED			
CKT. 48	EQ. OUT	T	49	CKT. 48	EQ. IN	TI	49
		R	24			RI	24
CKT. 1	SIG. EQ.	E	26	CKT. 1	SIG. LINE	E	26
		M	1			M	1
REPEATED				REPEATED			
CKT. 24	SIG. EQ	E	49	CKT. 24	SIG. LINE	E	49
		M	24			M	24
CKT. 25	SIG. EQ	E	26	CKT. 25	SIG. LINE	E	26
		M	1			M	1
REPEATED				REPEATED			
CKT. 48	SIG. EQ.	E	49	CKT. 48	SIG. LINE	E	49
		M	24			M	24

DIMENSIONS ARE FOR REFERENCE ONLY Inch (mm)

* Please visit the product pages on our website for the most up-to-date product information

TT-JAX® (.173") CONNECTORIZED JACKFIELDS

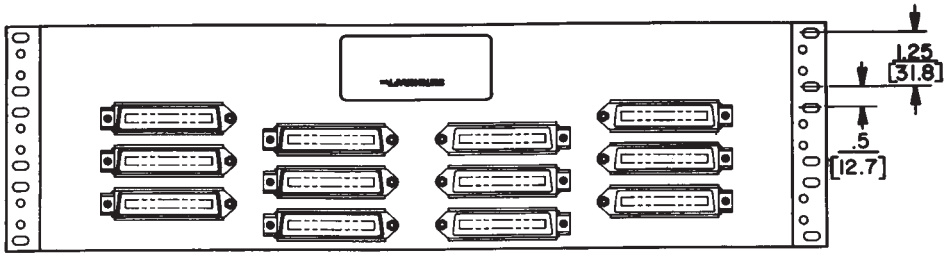

REAR VIEW —ROTATED

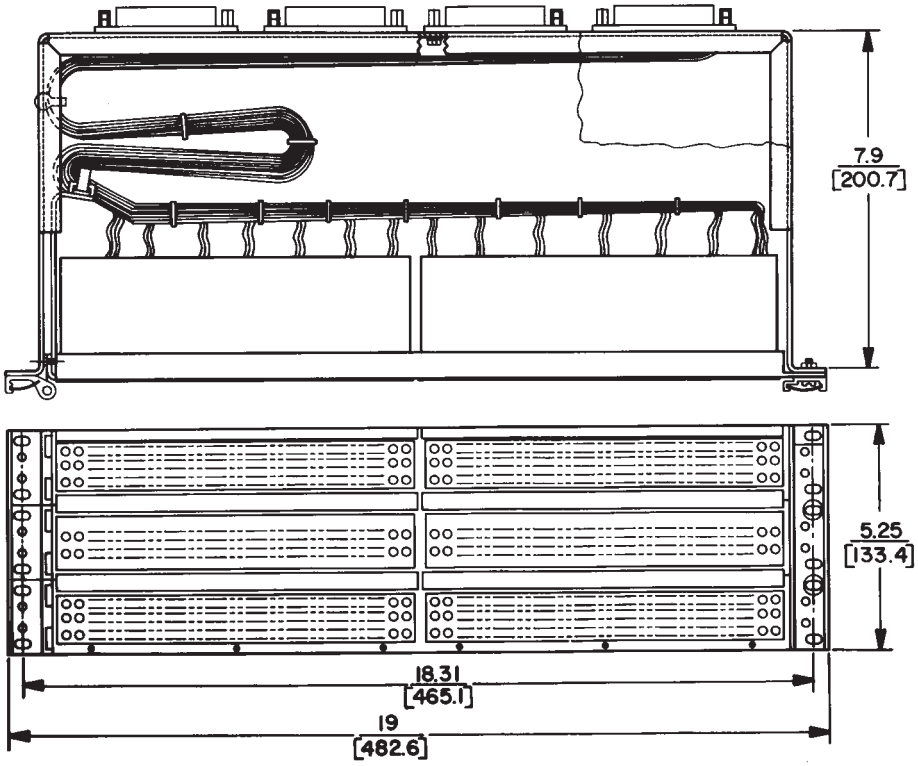

No. 16J-1055

TYPICAL CIRCUIT ARRANGEMENTS

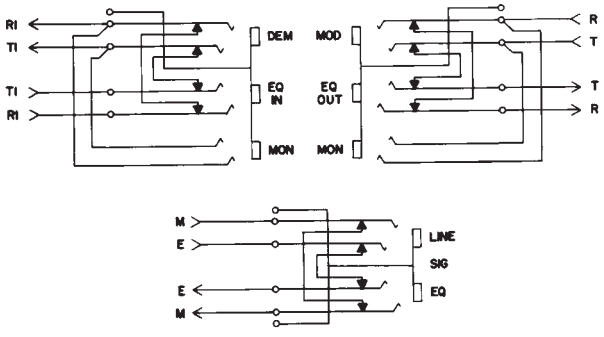

CONNECTION TABLE

TO PLUG CONNECTOR			PIN	TO RECEPTACLE CONNECTOR			PIN
CKT. 1	DEM.	TI	26	CKT. 1	MOD.	T	26
		RI	1			R	1
REPEATED				REPEATED			
CKT. 24	DEM.	TI	49	CKT. 24	MOD.	T	49
		RI	24			R	24
CKT. 25	DEM.	TI	26	CKT. 25	MOD.	T	26
		RI	1			R	1
REPEATED				REPEATED			
CKT. 48	DEM	TI	49	CKT. 48	MOD	T	49
		RI	24			R	24
CKT. 1	EQ. OUT	T	26	CKT. 1	EQ. IN	TI	26
		R	1			RI	1
REPEATED				REPEATED			
CKT. 24	EQ. OUT	T	49	CKT. 24	EQ. IN	TI	49
		R	24			RI	24
CKT. 25	EQ. OUT	T	26	CKT. 25	EQ. IN	TI	26
		R	1			RI	1
REPEATED				REPEATED			
CKT. 48	EQ. OUT	T	49	CKT. 48	EQ. IN	TI	49
		R	24			RI	24
CKT. 1	SIG. EQ.	E	26	CKT. 1	SIG. LINE	E	26
		M	1			M	1
REPEATED				REPEATED			
CKT. 24	SIG. EQ.	E	49	CKT. 24	SIG. LINE	E	49
		M	24			M	24
CKT. 25	SIG. EQ.	E	26	CKT. 25	SIG. LINE	E	26
		M	1			M	1
REPEATED				REPEATED			
CKT. 48	SIG. EQ.	E	49	CKT. 48	SIG. LINE	E	49
		M	24			M	24

DIMENSIONS ARE FOR REFERENCE ONLY Inch (mm)

® Registered trademark of Switchcraft, Inc.
Note: Contact your Switchcraft Representative for price and delivery

* Please visit the product pages on our website for the most up-to-date product information

TT-Jax® (.173") CONNECTORIZED JACKFIELDS

TYPICAL SERIES TTPC 6-WIRE JACKFIELD DIMENSIONS

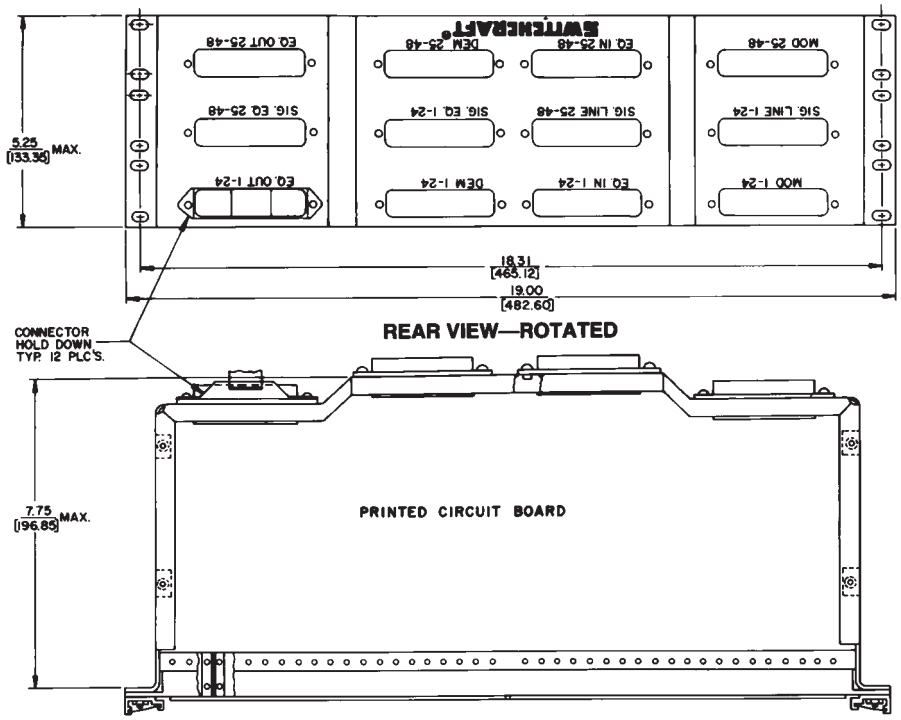

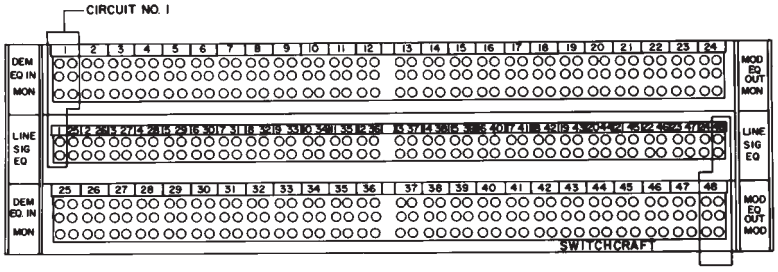

CONNECTION TABLE

TO PLUG CONNECTOR			PIN
CKT. 1	DEM	T/RI	26/1
REPEATED			
CKT. 24	DEM	T/RI	49/24
CKT. 25	DEM	T/RI	26/1
REPEATED			
CKT. 48	DEM	T/RI	49/24
CKT. 1	EQ OUT	T/R	26/1
REPEATED			
CKT. 24	EQ OUT	T/R	49/24
CKT. 25	EQ OUT	T/R	26/1
REPEATED			
CKT. 48	EQ OUT	T/R	49/24
CKT. 1	SIG EQ	E/M	26/1
REPEATED			
CKT. 24	SIG EQ	E/M	49/24
CKT. 25	SIG EQ	E/M	26/1
REPEATED			
CKT. 48	SIG EQ	E/M	49/24

TO RECEPTACLE CONNECTOR			PIN
CKT. 1	MOD	T/R	26/1
REPEATED			
CKT. 24	MOD	T/R	49/24
CKT. 25	MOD	T/R	26/1
REPEATED			
CKT. 48	MOD	T/R	49/24
CKT. 1	EQ IN.	TI/RI	26/1
REPEATED			
CKT. 24	EQ IN.	TI/RI	49/24
CKT. 25	EQ IN	TI/RI	26/1
REPEATED			
CKT. 48	EQ IN	TI/RI	49/24
CKT. 1	SIG LINE	E/M	26/1
REPEATED			
CKT. 24	SIG LINE	E/M	49/24
CKT. 25	SIG LINE	E/M	26/1
REPEATED			
CKT. 48	SIG LINE	E/M	49/24

DIMENSIONS ARE FOR REFERENCE ONLY Inch / (mm)

* Please visit the product pages on our website for the most up-to-date product information

TT® LAMPS AND JEWEL ASSEMBLIES



Steady "On" Lamp
Series TT450



Blinking/Steady
"On" Lamp

SERIES TT-450 LAMPS

Red LED and series dropping resistor are molded into compact cartridge with bi-pin terminals for use with TT Lamp-Jax® lamp jacks. Colored bezels are molded in for color coding of functions; colors are black, red, green, white and yellow. On special order, blue or other colors are available.

Standard voltages are 6, 24 and 48 V (DC only). No tools are required for lamping/relamping. Simply slip TT-LED into lamp jack with (+) terminal up. If it doesn't light, remove it, rotate it 180°, and reinsert it into jack.

SPECIFICATIONS

Housing: Molded black plastic.
Bezel: Molded plastic in colors.
LED: Red illumination.
Pins: T-1 3/4 bi-pin configuration.

Part Number	Voltage	Bezel Color	Part Number	Voltage	Bezel Color
TT45106	6	Red	◊TT45406	6	Blue
TT45124	24		◊TT45424	24	
TT45148	48		◊TT45448	48	
TT45206	6	Black	TT45506	6	White
TT45224	24		TT45524	24	
TT45248	48		TT45548	48	
TT45306	6	Green	TT45806	6	Yellow
TT45324	24		TT45824	24	
TT45348	48		TT45848	48	

ORDERING

1. Order by part number from table.
2. For special order items, such as other LED colors, voltages, lamps with 25% reduced power consumption, etc., contact Switchcraft.

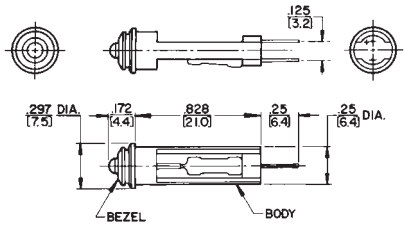

Series TT-450 TT-LED Lamps

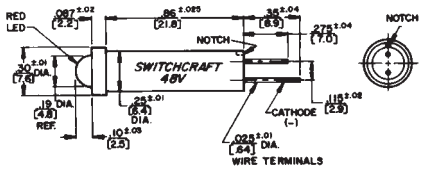

Flashing/Steady "On" Lamps

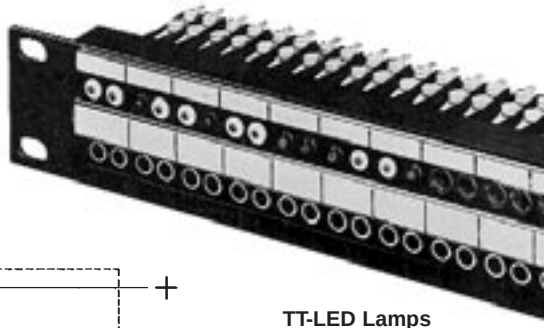

TT-LED Lamps
Installed

SCHEMA

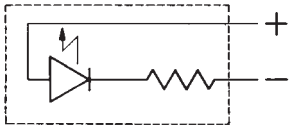

FLASHING/STEADY ON LEDS

Yellow, green and red LEDs are 2-pin cartridge plug-ins which operate from a 48 VDC supply. When 48 V is applied, LED flashes for 30 seconds, then changes to steady "On" condition.

SPECIFICATIONS

Body: Thermoplastic, UL 94V-0 rated.
LED Colors: Yellow, green or red.

Part Number	Description
15J9068	Red flashing/continuous
15J9076	Yellow flashing/continuous
15J9077	Green flashing/continuous
15J9078	Amber flashing/continuous

TT-JEWEL ASSEMBLY



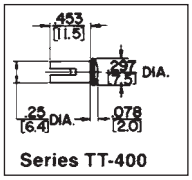

Series TT-400

Panel with TT-Jewel Assemblies
and TT-Switches installed

Jewel assemblies use bi-pin lamp and act as lighted jewel and lamping/relamping tool. Simply slip bi-pin lamp in brass collar and insert lamp with pins in vertical plane. Lamp automatically seats properly. Jewel is molded plastic in colors; sleeve is brass.

Part Number	Color	Part Number	Color
TT401	Red	TT408	Yellow
TT403	Green	TT413	Amber
TT404	Blue	TT510	Black*
TT405	White	*Used as hole plug where no jack is installed.	

LAMPS

Part Number	Description
P2290	6.3 V, GE No. 7377.
P2315	6.3 V, GE No. 7381. Avg. life: 50K hrs. @ 200 mA.
P2316	28 V, GE No. 7387. Avg. life: 25K hrs. @ 40 mA.
P2456	24 V, GE No. 7001.

DIMENSIONS ARE FOR REFERENCE ONLY Inch (mm)

® Registered trademark of Switchcraft, Inc.
Note: Contact your Switchcraft Representative for price and delivery

* Please visit the product pages on our website for the most up-to-date product information

LONGFRAME SWITCHBOARD SWITCHES

SERIES 11000 and 11200

Premium quality, long frame switches, designed especially for jack panel mounted switching. Standard actuations are push-lock/pull-release, 2-position turn button and 3 position turn button. Many contact forms available. Mounts in Switchcraft Jack Panels Series 1200, 1400, 2400, 2600, 2800, modular JP® jack panels, and other standard telephone jack panels. Part numbers in table indicate "A" frame. For same switch with "C" frame, add prefix "C" to part number. Many circuit forms not shown in tables are available on special order. Long leaf springs have no forms at point of flexing, which insures long life. Welded crossbar palladium contacts rated at 2A 200W maximum are standard. Fine silver (for higher currents) or gold alloy (dry circuit to 1A) contacts are available on special order. Contact Switchcraft.

SPECIFICATIONS

Frame, Screws and Twin Nut: Steel, plated.

Springs, Pressure Plate and Terminals: Copper alloy. Solder lugs are tin-dipped.

Contacts: Welded crossbar palladium are standard. Fine silver or gold alloy are available on special order.

Insulation: Rigid plastic. Extruded plastic tubing through stack.

Knob: Molded black plastic. Turn-key type faced with white arrow.

Bushing: Copper alloy, nickel-plated.

ORDERING

1. Order by part number from table.
2. For special order items, contact Switchcraft.

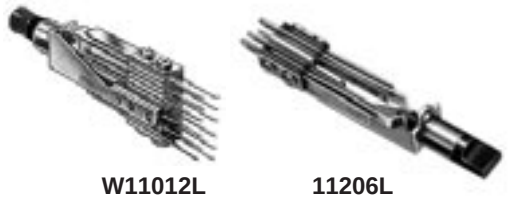

W11012L 11206L

Part Numbers		Circuit
Locking	Momentary	
PUSHBUTTONS - SERIES 11000		
◊11001L	◊11001	1-A
◊11002L	◊11002	1-B
11003L	11003	1-C
◊W11003L	◊W11003	
◊11003DL	◊11003D	1-D
◊11004L	◊11004	2-A
◊11005L	◊11005	2-B
11006L	11006	2-C
◊W11006L	◊W11006	
◊11006DL	◊11006D	2-D
◊11008L	◊11008	4-A
◊11009L	◊11009	3-C
◊11012L	11012	4-C
◊W11012L	◊W11012	
TURN BUTTONS - SERIES 11200		
◊11201L	◊11201	1-A
◊11202L	◊11202	1-B
11203L	11203	1-C
◊W11203L	◊W11203	
◊11203DL	◊11203D	1-D
◊11204L	◊11204	2-A
◊11205L	◊11205	2-B
11206L	11206	2-C
◊W11206L	◊W11206	
◊11206DL	◊11206D	2-D
◊11208L	◊11208	4-A
◊11209L	◊11209	3-C
◊11212L	11212	4-C
◊W11212L	◊W11212	

◊ Special order only; contact Switchcraft.

Mounting Screws: #6-32, **P10725**, can be ordered separately. Contact Switchcraft. (Screws not supplied with switches.)

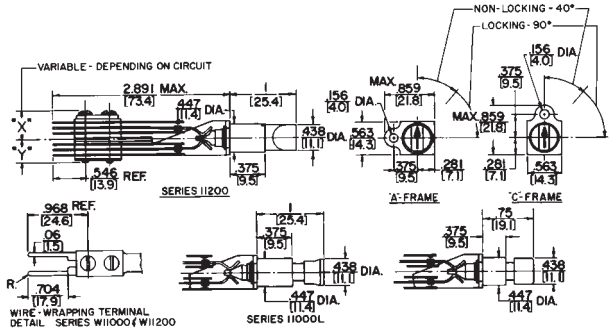

"T-Switch" Switches

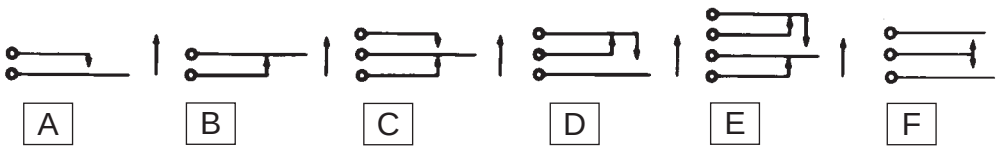

Basic Schematic Circuits

DIMENSIONS ARE FOR REFERENCE ONLY Inch (mm)

* Please visit the product pages on our website for the most up-to-date product information

DUMMY PLUGS AND HOLE PLUGS



491



492



493

When inserted into a standard size telephone jack, the dummy plug actuates springs like a normal plug, except no signal is conducted through since the plug is made of non-conducting plastic. Dummy plugs can also be used to plug-up unused jacks to prevent accidental insertion of an incorrect plug.

SERIES 491: 3-conductor with .206" diameter finger. Mates with MT342B and MT344B MT-Jax®, Series M Hi-D Jax®, and other standard telephone jacks having .21" inside diameter sleeves.

SERIES 492: 3-conductor with .25" diameter finger. Mates with 3-conductor MT-Jax® and Series M Hi-D Jax®, and other standard telephone jacks have .25" inside diameter sleeves.

SERIES 493: 2-conductor with .25" diameter finger. Mates with 2-conductor MT-Jax®, Series M Hi-D Jax®, and other standard telephone jacks having .25" inside diameter sleeves.

Part Number	Description		Interchangeable with	
	Conductors	Color	WEco	Trimm
49101	3	Red	–	–
49102	3	Black	–	–
49105	3	White	–	–
49201	3	Red	258F	558D
49202	3	Black	258C	558C
49205	3	White	258E	558E
49301	2	Red	165F	556D
49302	2	Black	165C	556C
49305	2	White	165E	–

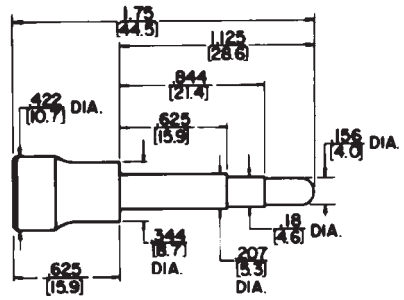

No. 491

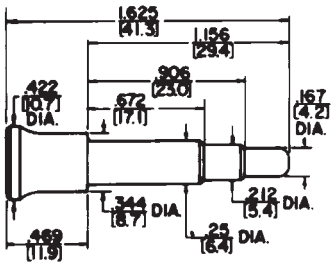

No. 492

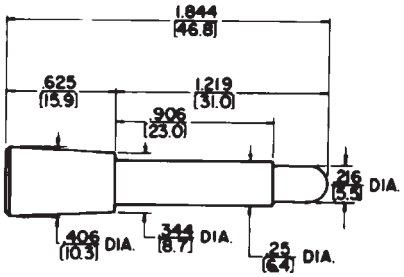

No. 493



PLASTIC HOLE PLUG
Hole Plug P1801

Used to seal off unused holes in jack panels, Series 1200, 1400, 2400, 2600 and JP012000 through JP122000. Constructed of dimensionally stable molded black plastic.

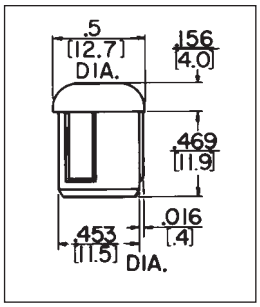

DIMENSIONS ARE FOR REFERENCE ONLY Inch (mm)

® Registered trademark of Switchcraft, Inc.
Note: Contact your Switchcraft Representative for price and delivery

* Please visit the product pages on our website for the most up-to-date product information

TT® (BANTAM) CIRCUIT GUARD PLUGS

APPLICATION

Circuit guard plugs snap into TT-Jax® (bantam) jacks eliminating accidental or unauthorized insertion of a plug into a critical circuit. The circuit guards plugs do not actuate the jack springs. These plugs seal the jack bushing and provide an additional means of circuit identification.

Circuit guard plugs are available in three different designs: Series TT512, Series TT513 and Series TT514. All three designs are molded thermoplastic and are available in the following colors: red, black, green, blue, white or yellow.

SERIES TT512

TT512 circuit guard plugs cover an individual jack opening and insert to an virtually flush position with the front panel.

SERIES TT513

TT513 circuit guard plugs are similar to the Series TT512 except the button extends .219" from the front of the panel for easier removal.

SERIES TT514

TT514 circuit guard plugs cover both the IN and OUT jacks of two adjoining circuits while leaving the monitor jacks exposed for circuit testing. The four jack circuit guard plugs also include a matte finish white plastic marking strip and a clear extruded plastic window for additional designation.

SPECIFICATIONS

TT512 and TT513: Molded thermoplastic in colors.
TT514: Base: Molded thermoplastic in colors.
Marking Strip: Matte finish white plastic.
Cover: Clear extruded plastic.

ORDERING

1. Order by part number from table.
2. Contact Switchcraft for any special order items.

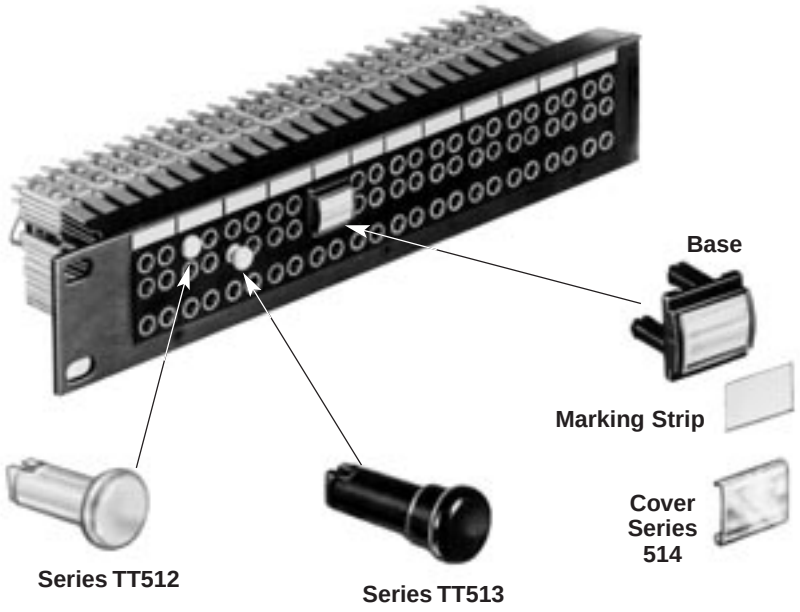

Part Number	Part Number	Part Number	Color
TT5121	TT5131	TT5141*	Red
TT5122	TT5132	TT5142*	Black
TT5123	TT5133	TT5143*	Green
TT5124	TT5134	TT5144*	Blue
TT5125	TT5135	TT5145*	White
TT5128	TT5138	TT5148*	Yellow

*Includes base, marking strip & cover.

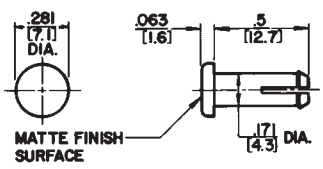

Series TT-512

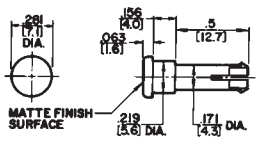

Series TT-513

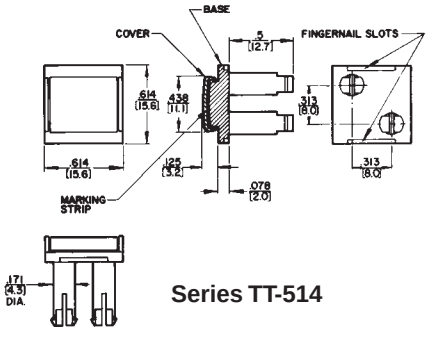

Series TT-514

DIMENSIONS ARE FOR REFERENCE ONLY Inch (mm)

* Please visit the product pages on our website for the most up-to-date product information

MINIATURE, DUMMY PLUGS, HOLE PLUGS



TT203
TT-Terminating Plug



TT205
TT-Dummy Plug



TT207 TT-Twin Looping Plug



TT515
TT-Dummy Plugs



TT510
Hole Plug



TT5152 or TT206



TT210

Terminating, dummy and looping plugs are designed for use with Tini-Telephone® Jacks. TT-Phone Plugs are also recommended for use on other miniature telephone jacks with same bushing inside diameter and compatible tip and/or ring spring configurations.

TT-TERMINATING PLUGS

TT-Phone Plug terminating plugs are used to terminate a circuit with a specific resistive load. A precision 1/2 watt, ± 1% resistor is molded into the handle of each terminating plug. See "PLUG SCHEMATICS" for resistor wiring. Resistance value is marked on plug handle. Other resistance values are available on special order.

TT-DUMMY PLUGS

TT-Phone Plug dummy plugs are designed to be inserted into phone jacks to actuate shunt and isolated switching circuits.

TT-LOOPING PLUGS

TT-Phone Plug looping plugs are used to loop or patch adjacent jack circuits. See "PLUG SCHEMATICS" for wiring.

TT-HOLE PLUG

TT-Hole Plugs are used to close off unused openings in all Switchcraft TT-Jack Panels. Molded of black plastic with brass sleeve.

ORDERING

1. Order by part number from table.
2. Contact Switchcraft for any special order items.

SPECIFICATIONS

Series TT200 Tip Rod, Ring and Sleeve:
Brass per QQ-B-626.
Handle: Molded PVC, ivory or black.
Series TT515: Molded of dimensionally stable plastic in black, red or white.

Part No.	Description	Schematic	Color
◊TT201	2-conductor terminating-135Ω	1	Gray
◊TT202	2-conductor terminating-600Ω	1	Gray
TT203	3-conductor terminating-135Ω	2	Gray
TT204	3-conductor terminating-600Ω	2	Gray
TT205	2-conductor dummy	5	Gray
TT206	3-conductor dummy	6	Gray
◊TT207	2-conductor twin looping	3	Gray
TT208	3-conductor twin looping	4	Gray
TT209	2-conductor twin dummy	5	Ivory
TT210	3-conductor twin dummy	6	Ivory
TT510	Hole Plug	–	Black
TT5151	2- or 3-conductor dummy	–	Red
TT5152	2- or 3-conductor dummy	–	Black
TT5155	2- or 3-conductor dummy	–	White

◊ Special order only; contact Switchcraft for price and delivery.

Plug Schematics

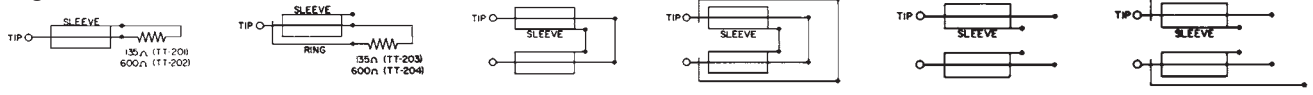

1 2 3 4 5 6

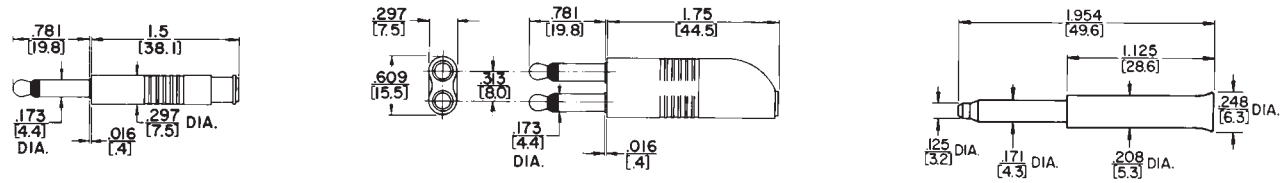

Nos. TT-201, TT-202, TT-205 | Nos. TT-207, TT-209 | Nos. TT-515-1, -2

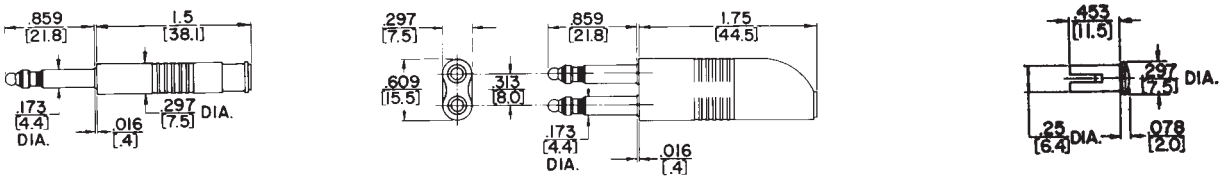

Nos. TT-203, TT-204, TT-206 | Nos. TT-208, TT-210 | Nos. TT-510

DIMENSIONS ARE FOR REFERENCE ONLY Inch (mm)

® Registered trademark of Switchcraft, Inc.
Note: Contact your Switchcraft Representative for price and delivery

* Please visit the product pages on our website for the most up-to-date product information

DESIGNATION STRIPS

Designation strips with protective covers are supplied with all tini-telephone® jack panels, jackfields and certain standard jack panels. Replacement kits and individual parts are also available. Legends can be marked in pencil, ink, or lettering transfers. Kwik-Change® is the name of all horizontal strips. See illustration.

Three types of designation strips are available as accessories:

1. Kwik-Change single height.
2. Kwik-Change double height.
3. X-Wide vertical.

KWIK-CHANGE® DESIGNATION STRIPS (SINGLE HEIGHT)

Two types of single height designation strips are available:

1. SERIES 1600, A1600, B1600, C1600, 1700, B1700, 1400300, 2600300, JP012000 through JP122000
   - Extruded aluminum mounting strip
   - Four mounting screws
   - Marking strips
   - Clear plastic strip covers

Mounting strips are fastened with four mounting screws provided. Marking strip slides into the clear plastic cover, and cover is snapped into place on the mounting strip. Legends can be marked in pencil, ink, lettering transfers, typewriter, etc.

SPECIFICATIONS

(Used on panels 1600, A1600, B1600, C1600, 1700, B1700)
Mounting Strip: Extruded aluminum black anodized
Cover: Clear extruded plastic.
Marking Strip: White matte finish plastic.
Screws: Copper alloy, plated.
(Used on panels 1400300, 1600300)
Mounting Strip: Aluminum alloy, extruded, black anodized.
Cover: Clear extruded plastic.
Marking Strip: White matte finish plastic.
Screws: Steel, plated.

SERIES TT51 through TT62, TT-Connectorized (2-, 4- and 6-Wire), JP012000 through JP122000, TTPC and DSX panels. Mounting strips are extruded as part of the panel. Otherwise, use is the same as above.

ORDERING

Order by part number from table.

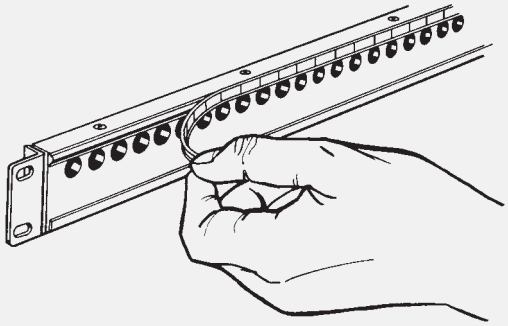



Kwik-Change Designation Strip
Kit Number DS301 (single height)



Kwik-Change Designation Strip
Kit Number DS318 (single height)

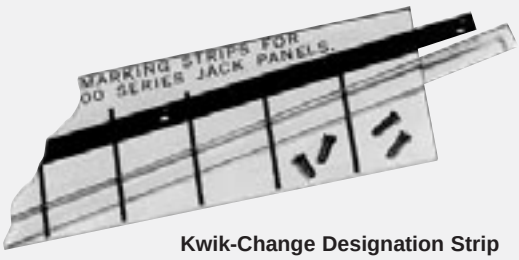

Kwik-Change Designation Strip
Kit Number TT501 (single height)



Kwik-Change Designation Strip
Kit Number TT516 (single height)

DIMENSIONS ARE FOR REFERENCE ONLY Inch (mm)

* Please visit the product pages on our website for the most up-to-date product information

DESIGNATION STRIPS (continued)

SINGLE HEIGHT DESIGNATION STRIPS

Part No.	Description	For Panels
TT501	Kits (single height) includes: 1-mounting strip (8.375" long) 1-cover 1-marking strip sheet (5 strips per sheet) 4-mounting screws	1600, 1700 (Alternate spacing)
TT502	Marking Strip sheet (used with Kit TT501 & TT521)	–
TT503	Cover (used with Kit TT501 and TT504)	–
TT504	Kits (single height) includes: 1-mounting strip (8.375" long) 1-cover 1-marking strip sheet (5 strips per sheet) 4-mounting screws	A1600, C1600 (Continuous spacing)
TT519	Kit (single height) includes: 2-covers (9.61" long) 1- marking strip sheet (5 strips per sheet)	TT52, TT54 TT56, TT58 TT60, TT62 (23" Panels)
TT520	Marking strip sheet (used with Kit TT519)	–
TT521	Kit (single height) includes: 2-covers (8.25" long) 1- marking strip sheet (5 strips per sheet)	TT51, TT53 TT55, TT57 TT59, TT61, Connectorized Jackfields (2-, 4- and 6 wire)

Part No.	Description	For Panels
DS301	Kit (single height) includes: 1-mounting strip (17" long) 1-cover 1-marking strip sheet (5 strips per sheet) 4-mounting screws	1400301, 2600301
DS302	Cover (used with Kit DS301)	–
DS303	Marking strip sheet (used with Kit DS301 and DS316).	–
DS306	Marking strip sheet (used with Kit DS307 and DS308).	–
DS307	Kit (single height) includes: 2-covers (16.5" long) 1-marking strip sheet (5 strips per sheet)	JP012000, JP032000, JP052000
DS308	Kit (single height) includes: 2-covers (19.5" long) 1-marking strip sheet (5 strips per sheet)	JP022000, JP042000, JP062000
DS316	Kit (single height) includes: 2-covers (16.25" long) 1- marking strip sheet (5 strips per sheet)	JP072000 JP092000, JP112000
DS317	Marking strip sheet (used with Kit DS318).	–
DS318	Kit (single height) includes: 2-covers (20" long) 1- marking strip sheet (5 strips per sheet)	JP082000 JP102000, JP122000

KWIK-CHANGE® DESIGNATION STRIPS (DOUBLE HEIGHT)

Double height strips allow larger legends. Can be factory installed on Series 1600, B1600, 1700 and B1700 panels, or may be ordered separately for customer installation.

- Series 1600/B1600: Four strips can be mounted, two above each row of jack openings.
- Series 1700: Two strips can be mounted, two above or two below (special order) the double row of jack openings.
- Series B1700: Two strips can be mounted (side-by-side) above top row of jacks.

NOTE: When TT516 kits are mounted above top row of jacks on Series 1600, B1600 and B1700, strips will overhang top edge of panel by .156 inches For most applications, the strips help seal the normal opening between adjacent panels. Series B1700 panel mounting screws may have to be loosened to facilitate removal of the panel above it in this type of installation.

SPECIFICATIONS

Mounting Strip: Black thermoplastic UL 94V-0.

Cover: Clear plastic.

Marking Strip: Matte finish white plastic.

Mounting Screws: Copper alloy, plated.

ORDERING

1. Order by part number from table.
2. To order double height strips installed on panels, contact Switchcraft.

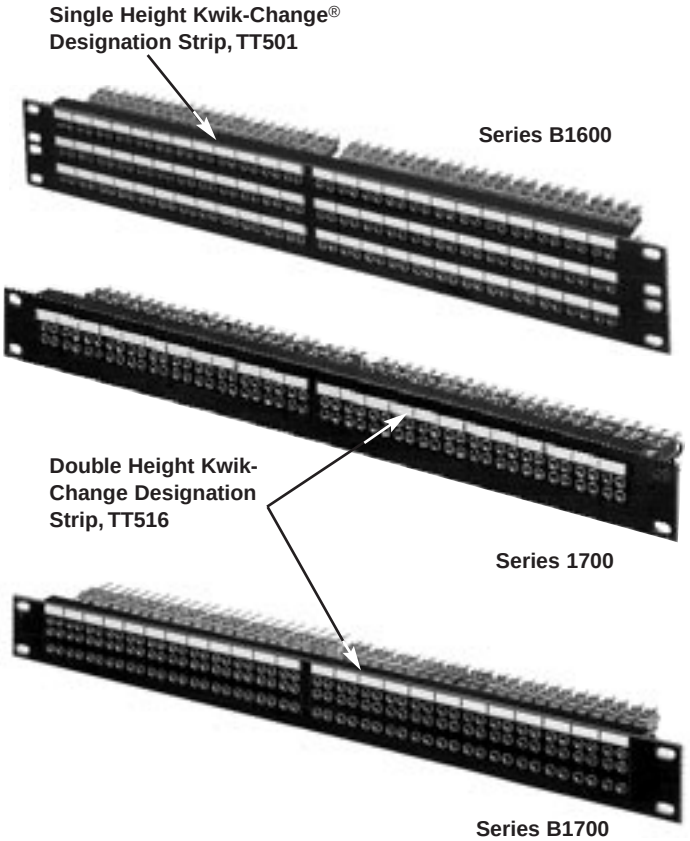

DIMENSIONS ARE FOR REFERENCE ONLY Inch (mm)

® Registered trademark of Switchcraft, Inc.

Note: Contact your Switchcraft Representative for price and delivery

* Please visit the product pages on our website for the most up-to-date product information

KWIK-CHANGE® DESIGNATION STRIPS (DOUBLE HEIGHT)



Kwik-Change® Designation Strip DS311 (double height)

DOUBLE HEIGHT DESIGNATION STRIPS

Part No.	Description	For Panels
DS311	Kit (double height) includes: 1-mounting strip (17" long) 1-cover 1-marking strip sheet (3 strips per sheet) 4-mounting screws	2600310, 1400315
DS312	Cover (used with Kit DS311)	–
DS313	Marking strip sheet (used with Kit DS311)	–

Part No.	Description	For Panels
TT516	Kit (double height) includes: 1-mounting strip (8.375" long) 1-cover 1-marking strip sheet (3 strips per sheet) 4-mounting screws	1600, B1600, 1700, B1700
TT517	Marking strip sheet (used with Kit TT516)	–
TT518	Cover (used with Kit TT516)	–

X-WIDE® VERTICAL DESIGNATION STRIPS

X-Wide designation strips mount on either side (or both) of standard 19" and 23" wide panels and do not interfere with horizontally mounted strips. Each kit contains two mounting brackets which easily fasten with mounting screws provided. Marking strips and clear plastic covers slide into place. Each kit fits onto both sides of a jack panel. X-Wide strips are used on the following panels:

UNDRILLED	PREDRILLED
1600, A1600, 1700 B1700, TT51 through TT62, 2-, 4- & 6-Wire TT-Connectorized Jackfields, 2- & 4-Wire TTPC Connectorized Jackfields, 1200, 1400, 1400320, 2600,and 2600320.	D1600, D1700, BD1700, TTD51 through TTD62, 2- 4 & 6-Wire TT-Connectorized Jackfields, 2 & 4-Wire TTPC Connectorized Jackfields.

SPECIFYING NOTES: Each kit fits both sides of a jack panel (Standard height 1.75". Also available in 3.5 inch and 5.25 inch heights.

Prefix letter"D" indicates panels have been predrilled countersunk holes to facilitate mounting X-Wide strips. Series 1200, 1400, & 2600 can be predrilled on special order.

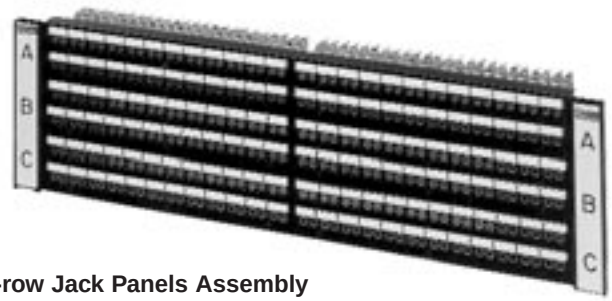

3-row Jack Panels Assembly with DS323 X-Wide Designation Strip installed

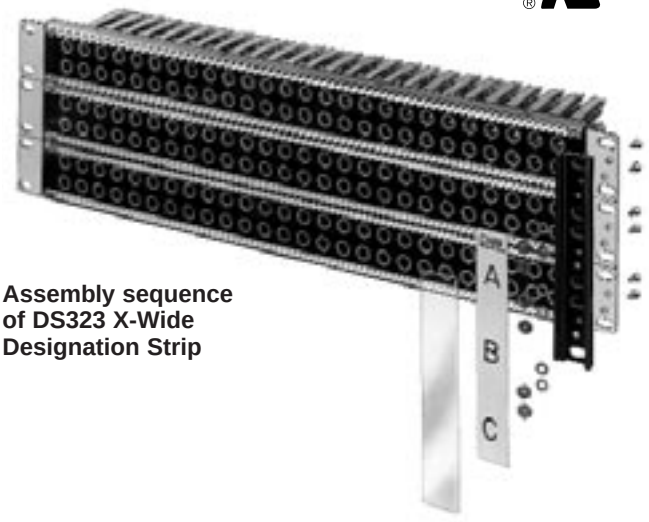

Assembly sequence of DS323 X-Wide Designation Strip

DIMENSIONS ARE FOR REFERENCE ONLY Inch (mm)

* Please visit the product pages on our website for the most up-to-date product information

X-WIDE® VERTICAL DESIGNATION STRIPS

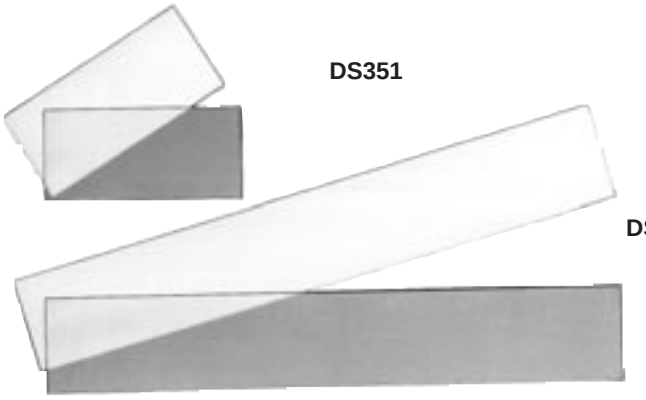

X-WIDE VERTICAL DESIGNATION STRIPS

Part No.	Description	For Panels
DS321	Kit (.75 x 1.75 inches) includes: 2-mounting brackets 2-marking strips 2-covers 4-mounting screws, nuts and lockwashers	1600, A1600 1700, B1700 TT51 thu TT54, TT59 thru TT62, 2- & 4-Wire TTConnectorized Jackfields, 2-, 4- & 6-Wire TTPC Conntectorized Jackfields
DS322	Kit (.75 x 3.5 inches) includes: 2-mounting brackets 2-marking strips 2-covers 8-mounting screws, nuts and lockwashers	Same as DS321 (Mounted in pairs)
DS323	Kit (.75 x 5.25 inches) includes: 2-mounting brackets 2-marking strips 2-covers 12-mounting screws, nuts and lockwashers	6-Wire TT-Connectorized and panels for DS321
DS350	Kit (.75 x 2.265 inches) includes: 2-mounting brackets 2-marking strips 2-covers 4-mounting screws, nuts and lockwashers	B1600, C1600
DS351	Kit (.75 x 1.75 inches) includes: 1-marking strip 1-cover (Used on all 1.75 inch height connectorized jackfields except next to hinge)	2-, 4- & 6-Wire Connectorized Jackfields, TTPC Connectorized Jackfields
DS352	Kit same as DS351except narrow width. To be used next to hinge.	Same as DS351
DS353	Kit (.75 x 5.25 inches) includes: 1-marking strip 1-cover	6-Wire TT-Connectorized Jackfields

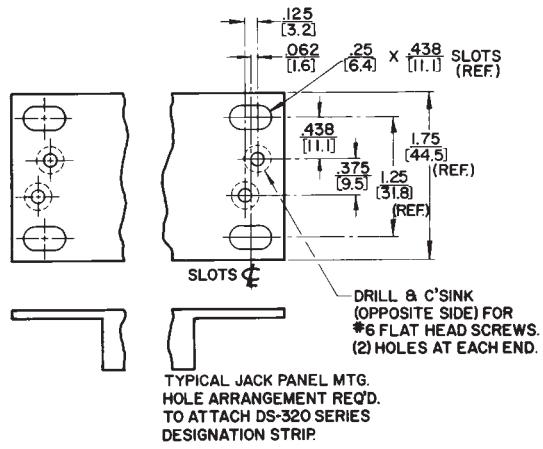

SERIES DS-320, Mechanical Details

ORDERING

1. Order by part number from table.
2. To order X-Wide® strips installed on panels, contact Switchcraft.

DIMENSIONS ARE FOR REFERENCE ONLY Inch (mm)

® Registered trademark of Switchcraft, Inc.
Note: Contact your Switchcraft Representative for price and delivery

* Please visit the product pages on our website for the most up-to-date product information

DESIGN MATERIALS AND FEATURES

Molded cable assemblies offer many advantages over conventionally-fabricated cables:

- Improved wiring strain relief.
- Proper match of cable diameter to handle.
- Sealed junction: Less exposed area; less contamination due to moisture, dust, dirt.
- Lower weight and smaller size.
- 100% shielding on selected types.
- Color to match/complement equipment decor.
- Legends, color codes, ribs, dot, customer logo/indicia can be added.
- All molded cables are 100% tested for continuity, shorts and voltage breakdown (250 or 500V).
- All Switchcraft® molded assemblies are UL recognized.

OEM COST SAVINGS

Molded cable assemblies generally cost less than your in-house conventionally-fabricated assemblies. Specific advantages are elimination of:

1. Your evaluation, ordering, incoming inspection, and stocking of individual parts.
2. Your plant/equipment needs for in-house fabrication.
3. Your tooling/labor costs
4. Your production line QA/QC.

MOLDED CABLE RELIABILITY

In a series of OEM-conducted tests of Switchcraft versus non-molded, fabricated cables, Switchcraft cables were shown to be superior.

1. Fabricated cables broke at lower pull forces: OEM types – 24 to 34 pounds, molded cables – 37.5 to 41 pounds (molded cables did not break at terminations; the cable itself broke about one to two feet back from the connector).
2. Fabricated cables suffered broken wires at low pull-out force limits. Molded cables had cable breaks before cable pulled out of the handle, in most instances. And this failure occurred, as previously noted, at higher pull-out forces.

Strengthened molded cable assemblies out-performed fabricated assemblies, and in fact, the crimp molding process makes it stronger than the wire itself.

SPECIAL ORDER ITEMS

- Customer logo
- Panel Relief Bushing. Specify panel thickness and exact point on cable where bushing is to be installed. Standard panel opening is .50" (12.7 mm) diameter. Double flatted in panels up to .125" (3.18 mm) thick.
- Molded Cable Clamp Bands or Y-Junctions. (Refer to page 258.)
- Special Termination (see separate chart). Contact Switchcraft for specials and provide complete details.

TYPES OF PLASTICS

Thermoplastics used for molded cable assemblies, have excellent electrical and mechanical properties, are economical, convenient for molding, and can be provided in an array of colors. They have electrical characteristics far higher than required, and provide dimensional stability, abrasion and abuse resistance, and can be molded with a smooth mirror-like finish or matte or semi-matte finishes.

WIRE AND CABLE

Switchcraft provides over 100 types of wire and cable from which molded cable assemblies are manufactured. Basically, 30 different cables are used for standard tooling. There are no additional charges where standard tooling exists.

Tooling is designed so cable entry openings on molded plastic handles fit tightly to the outside diameter of the cable. The tighter fit holds cable secure and is more resistant to abuse than if a larger opening were used.

DESIGN AND FABRICATING TECHNIQUES

Switchcraft's engineering staff is supported by a complete tool and die making facility, as well as a fully equipped and staffed molding department to fill all of Switchcraft's plastic molding requirements.

The molding department uses injection molders of semi-automatic, multiple-cavity type to obtain high production rates.

MANUFACTURING SEQUENCE (EXAMPLE)

Step 1: The 1-piece tip rod is firmly staked into the phone plug finger assembly, making a complete and mechanically secure assembly. (Refer to Figure 1) The staking process, using precision manufactured parts, keeps the tip rod assembly from working loose and causing mechanical and electrical problems later.

Step 2: Cable center conductor is soldered to tip rod; then the tubular bridge sleeve is slid forward, bringing the cable shield in contact with the circular notch around rear of tip rod assembly.

Step 3: Bridge sleeve is crimped tightly to tip rod assembly and cable. Center conductor is completely isolated from potential pulling strains, and shield makes a firm, low resistance connection with plug sleeve.

Step 4: A dimensionally stable plastic handle/body of the proper color, size and shape is molded into place. Features are depressions for finger grip, cable entry opening customized to cable diameter to minimize wear on cable, and handle/body molded in one place.

From start to finish, Switchcraft's molded cables are designed and built with maximum quality and reliability. There is virtually no limit to the type and characteristics of special molded cables that Switchcraft can build to special order. For all special orders, consult Switchcraft.

FIGURE 1: MOLDED CABLE MANUFACTURING STEPS FOR 1/4" LITTEL PLUG®

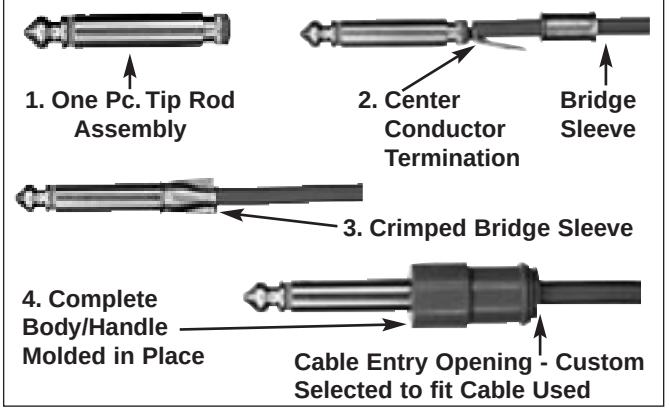

DIMENSIONS ARE FOR REFERENCE ONLY Inch (mm)

* Please visit the product pages on our website for the most up-to-date product information

3.5MM MOLDED CABLES



35HRXXX35



36HRXXX36



35HRXXX84

FEATURES AND BENEFITS
- Choose plug-to-plug or plug-to-stripped and tinned leads
- 3.5 mm plugs available as straight or right-angle
- Available in mono and stereo
- NOM.29 GA jacketed conductors (red and white) with copper spiral shield
- Cable O.D. 3.0 mm nom./.118" nom.
- Black cable

ORDERING INFORMATION
1. Order by part number.
2. Contact Switchcraft for custom requirements.

SPECIFICATIONS
PLUGS
Tip, Ring and Sleeve: Brass with nickel-plate
Flex Life: 5000 cycles minimum
Plug Insulator: ACETAL

PART NUMBERING SYSTEM

32 - Mono 33 - RA Mono 35 - Stereo 36 - RA Stereo	H - Black	R - 3.0 mm nom. 2-conductor wire with spiral copper shield	Length (feet) 036 (3) 072 (6) 144 (12)	32 - Mono 33 - RA Mono 35 - Stereo 36 - RA Stereo 84 - Stripped and tinned 90 - Straight Cut Off

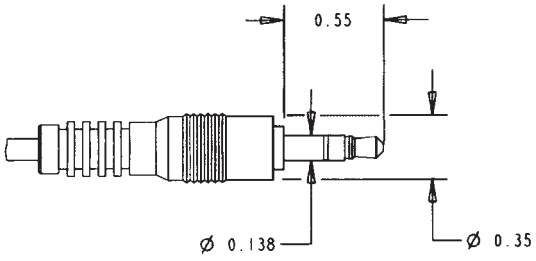

END CODE: 35
3.5 mm STRAIGHT PLUG

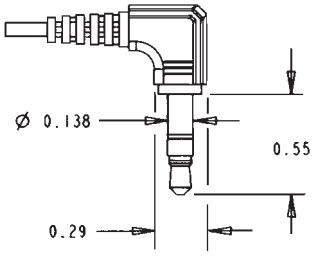

END CODE: 36
3.5 mm RIGHT-ANGLE PLUG

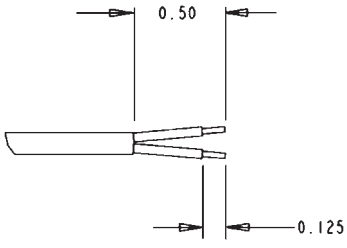

END CODE: 84
STRIP and TIN

DIMENSIONS ARE FOR REFERENCE ONLY Inch (mm)

® Registered trademark of Switchcraft, Inc.
Note: Contact your Switchcraft Representative for price and delivery

* Please visit the product pages on our website for the most up-to-date product information

MOLDED CABLE ASSEMBLIES
With Power-Plug Battery Charger Plugs and Jacks

ST760, ST765 – Termination Code: 47, 48

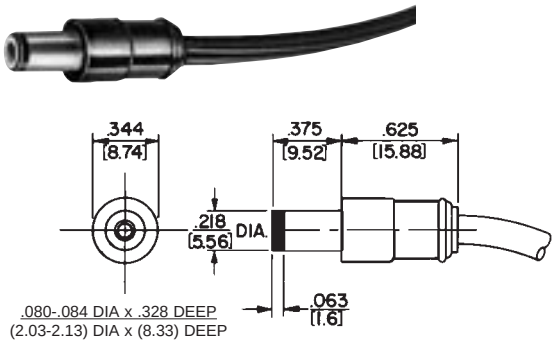

ST-760 .080-.084 DIA x .328 DEEP (2.03-2.13) DIA x (8.33) DEEP

ST-765 .099-.103 DIA x .328 DEEP (2.52-2.61) DIA x (8.33) DEEP

NOTE: ST760 is a molded version of S760; ST765 is a molded version of 765.

RA760, RA765 – Termination Code: 52, 53

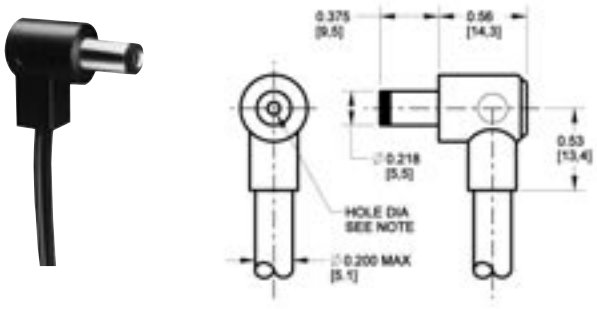

RA-760 .080-.084 DIA x .328 DEEP .(2.03-2.13) DIA x (8.33) DEEP

RA-765 .099-.103 DIA x .328 DEEP .(2.52-2.61) DIA x (8.33) DEEP

RA712A and RA722A
Termination Code: 71, 72

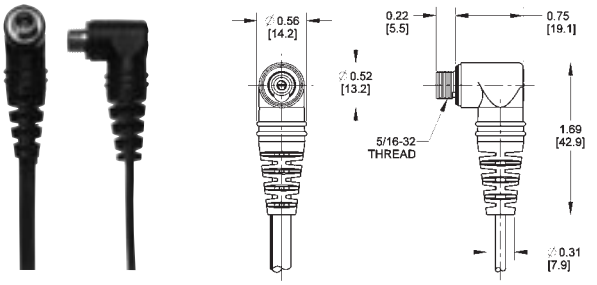

*RA712A
.108" -.112" Split Pin
Collapses to fit .10" Diameter Pin

RA722A
.086" -.090" Split Pin
Collapses to fit .08" Diameter Pin

Ask About Our Locking Power Plugs

SPECIFICATIONS

PLUG
Sleeve: Copper alloy, nickel-plated.
Pin: Silver-plated copper alloy.
Finger Insulator: Plastic.
Insulating Washers: Rigid plastic.
Sleeve Terminal: Steel, tin-plated.
Molded Handle: Plastic.

JACK
Bushing: Brass, nickel-plated copper alloy.
Washers: Rigid plastic.
Pin, Springs, and Terminals: Plated copper alloy.
Housings: Thermoplastic.

CABLE
We will build assemblies on cable furnished by you, .156" (3.96 mm) outside diameter, or on cable we purchase to your specifications. Jacket must have temperature rating of 60° C minimum. Optional mold available for larger cable; order as ST760L or ST765L.

DESIGN FEATURES
- **ST760, ST760L, RA760 –** accepts .08" (2.03 mm) diameter pin.
- **ST765, ST765L, RA765 –** accepts .099" (2.54 mm) diameter pin.
- **RA712A:**
- Mates with ST765, ST765L, and RA765.
- 2 conductor.
- Mounts in .313" diameter hole in panels up to .125" thick.
- Pin outside diameter is .108" - .112" split pin.
- Automatic switchover from AC to DC.
- **RA722A:**
- Mates with ST760, ST760L, and RA760.
- Pin outside diameter is .086" - .090" split pin.
- Molded-in cable clamp sleeve terminal (RA plugs only).
- For use with sockets similar to those used on portable radios, tape recorders, television receivers and appliances which feature AC adapters and/or battery chargers.
- Available with terminations of another ST760, RA760 stripped and tinned ends, spade lugs, alligator clips, and more on special order.
- Jacks available with extended bushing for use with Switchcraft locking power plugs 761K, 766K, S761K, and S766K on special order.

See ordering guide on next page.

DIMENSIONS ARE FOR REFERENCE ONLY Inch (mm)

* Please visit the product pages on our website for the most up-to-date product information

MOLDED CABLE ASSEMBLIES WITH POWER PLUGS AND JACKS PART NUMBERING SYSTEM

TO CREATE A PART NUMBER

1. Identify Terminations (both ends)
2. Indicate Color and Type of Cable
3. Select the Length of Assembly

DC POWER CABLE ASSEMBLIES

Type	Termination		Color	Cable*	Length (feet)				Termination	
ST760	4	7	G-Gray	C	0	1	8	(1.5)	4	7
ST765	4	8	H-Black	K	0	2	4	(2)	4	8
ST760L	5	7							5	7
ST765L	5	8							5	8
ST760K	7	3							7	3
ST765K	7	4							7	4
RA760	5	2		Y	0	3	6	(3)	5	2
RA765	5	3		Z	0	4	8	(4)	5	3
RA712A	7	1			0	7	2	(6)	7	1
RA722A	7	2			1	2	0	(10)	7	2
									8	4
									9	0

*See “Cable Types” chart on page 260. **Note:** Some configurations will be special orders. Contact Switchcraft.

TYPICAL STANDARD PART NUMBERS

STRAIGHT 2-CONDUCTOR .100 PIN POWER PLUG (#48) TO:			
Termination (other end)	**Cable**	**Length (feet)**	**Part Number[1]**
(power plug) #48	C	6	**48HC07248**
(stripped wires) #84	C	6	**48HC07284**
(blunt cut) #90	C	6	**48HC07290**
(power jack .100 pin) #71	K	6	**48HK07271**

1. All cables listed here are black.

DIMENSIONS ARE FOR REFERENCE ONLY Inch (mm)

® Registered trademark of Switchcraft, Inc.
Note: Contact your Switchcraft Representative for price and delivery

* Please visit the product pages on our website for the most up-to-date product information

EN3™ MINI WEATHERTIGHT OVERMOLDED CABLE ASSEMBLIES





FEATURES AND BENEFITS

- Dual purpose handle provides flex relief and finger grip design for easy insertion and withdrawal.
- Available in both cord and in-line versions.
- 2 through 8 pin configurations.
- Superior leakage protection. Contact area is double-sealed for excellent moisture and chemical resistance.
- Integral O-ring and gasket. O-ring is molded onto cord housing assembly and gasket is molded onto panel housing assembly to prevent leakage and eliminate need for additional copper case o-rings and gaskets.
- Thermoplastic rubber body simulates closed entry contact system to prevent probe damage or accidental loss of spring retention due to misaligned or bent pins.
- Housing rated UL 94V-O against flammability.
- Exceeds Coast Guard specifications for water tightness (CFR 46 Part 110.20).
- Exceeds enclosure rating IP16/IP18 when not mated or covered and IP66/IP68 when mated or covered (IEC 529).
- Exceeds enclosure rating 6P at 1000V when mated or covered (NEMA 250).

APPLICATIONS

- Process Control
- Communications
- Marine Electronics
- Transportation
- Medical Instrumentation
- General Industrial Electronics
- Geothermal Instrumentation

MATERIALS

Connector shells, contact locking disk: Thermoplastic polymer glass fiber, flame retardant
Coupling ring: Nylon
Connector shell interior: Thermoplastic rubber
Contacts: Copper base alloy gold-plated over nickel underplate

PART NUMBERING GUIDE*
Example:

1st Termination	Color	Cable	Length in Inches	2nd Termination
503	H	A	072	184

*In most instances the multi-conductor cable will be used – found on page 252.

The overmolded EN3™ cable can accept nominal cable O.D.'s up to .300.

Tooling charges may apply for customer specified cable.

SPECIFICATIONS

MECHANICAL

Shock: Mil-Std 202 Method 213B, condition K
Vibration: Mil-Std 202 Method 201
Life: 600 insertion/withdrawal cycles (minimum)

ELECTRICAL

Voltage Rating (sea level): Tested at 600 VRMS
Insulation Resistance: 100 megohms (minimum) at 77° F
Contact Resistance: 5 milliohms (maximum)
Current Rating: 7.5 Amps (#20 contact); 13.0 Amps (#16 contact)

ENVIRONMENTAL

Temperature Limits: -40°C to +65°C (non-operating)
Moisture Resistance: Mil-Std 202 Method 106F
Insulation Resistance: Mil-Std 202 Method 302 condition B
Thermal Shock: Mil-Std 202 Method 107G
Salt Spray: Mil-Std 202 Method 101D condition B

RATINGS

IP16/IP18
IP66/IP68
NEMA 250 (6P)
CFR 46 Part 110.20
UL 94V-O
Patent 5,485,673 File 36049

OVERMOLDED STYLE NUMBER
#20 CONTACT SIZE

Number of Pins	2	3	4	5	6	7	8
Male Cord	502	503	504	505	506	—	—
Female Cord	512	513	514	515	516	517	518
Male Inline	522	523	524	525	526	527	528
Female Inline	532	533	534	535	536	—	—

OVERMOLDED STYLE NUMBER
#16 CONTACT SIZE

Number of Pins	2	3	4	5	6	7	8
Male Cord	552	553	—	—	—	—	—
Female Cord	562	563	—	—	—	—	—
Male Inline	572	573	—	—	—	—	—
Female Inline	582	583	—	—	—	—	—

Note: 9-18 versions can also be molded. Contact factory for details.

DIMENSIONS ARE FOR REFERENCE ONLY Inch (mm)

* Please visit the product pages on our website for the most up-to-date product information

CORDETTE® AND CORD SWITCH ASSEMBLIES



FEATURES AND BENEFITS

- Momentary, 0.5 A switching combined with 1-piece molded plastic body qualifies Cordette for all types of commercial and industrial usage.
- Available with molded-on Cordette switch or assembled Cord switch (ED series).
- Cable features PVC outer jacket and withstands rugged use.

SPECIFICATIONS STYLE 97

Body: Series ED900
Housing: Die-cast zinc, satin nickel-plated.
Switch Body and Insert Bushing: H.H. Brass, nickel-plated.
Insulation: XXXP paper-base phenolic.
Cable Relief Bushing: Black neoprene.
Pressure Plates: Stainless steel.
Cable Relief Screws: Steel, nickel-plated.

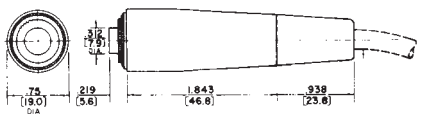

SERIES ED900

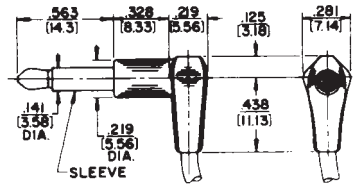

TERMINATION CODE: 51

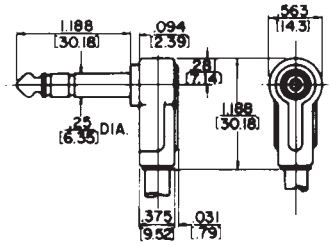

TERMINATION CODE: 06, 07
(06 - 2 conductor not shown)

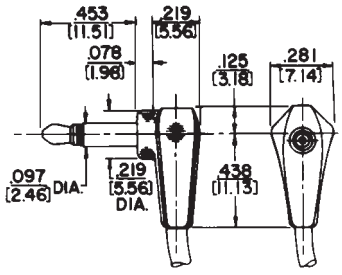

TERMINATION CODE: 61

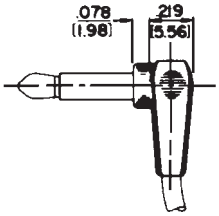

TERMINATION
CODE: 50



TERMINATION
CODE: 84

DESCRIPTION Example:	1st Term Code	Housing & Cable Color	CABLE CODE	Cable Length (In.) X	X	X	2nd Term Code	Circuitry	Button Color
Std. Cordette (921K)	99	G	V	0	7	7	84	Std. - 1A (No Code)	Std. Black (No Code)
ED903 Series	97							1 - 1B	H - Black
Standard Cable		G-Gray	V (W1230-1)	.250"	PVC	18GA	06	2 - 1C	R - Red
Type for 1/4" Plugs		H-Black	V (W1230-2)	.250"	PVC	18GA	07	3 - AB	W - White
		B-Beige	V (W1230-4)	.250"	PVC	18GA			
		W-White	V (W1230-5)	.250"	PVC	18GA			
Standard Cable		G-Gray	D (W1032-1)	.109"	PVC	25GA	61		
Types for Tini® and		H-Black	D (W1032-2)	.109"	PVC	25GA	50		
Micro Plugs		W-White	D (W1032-3)	.109"	PVC	25GA	51		
		H-Black	E (W1065-2)	.100"	PVC	26GA			

DIMENSIONS ARE FOR REFERENCE ONLY Inch (mm)

® Registered trademark of Switchcraft, Inc.
Note: Contact your Switchcraft Representative for price and delivery

* Please visit the product pages on our website for the most up-to-date product information

MOLDED CABLE ASSEMBLIES WITH CORDETTE® SWITCHES

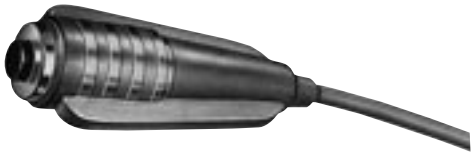

Ask About Our New Sealed Cordette® ST901 Code: 98

ST900
Termination Code: 99

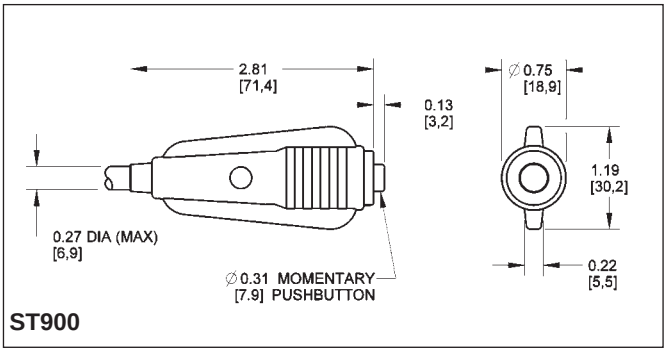

ST900

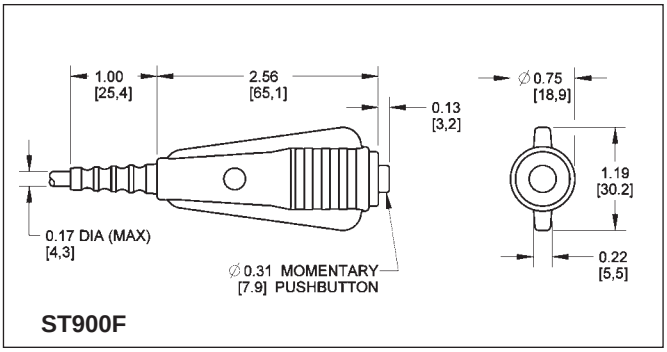

ST900F

SPECIFICATIONS
SWITCH

Housing: White plastic (standard).
Molded Body: Gray plastic (standard) with contrasting trim and gray pushbutton.
Contacts: Integral, copper alloy, hard gold-plated form 1-A, 0.5 A, 50 W maximum, AC, non-inductive load. Not recommended for high voltage circuits.
Insulation: Thermoplastic UL 94V-0.
Button Color: Black (standard). Other colors available on special order.

CABLE

Standard Unshielded—Type W-1230.
Note: See Standard Cable Chart on page 260 for details.
We will build assemblies on cable furnished by you, .27" (6.68 mm) outside diameter, or on cable we purchase to your specifications. Jacket must have temperature of 60° C minimum.
ST900 (#99)
Button stroke only .063" (1.6 mm). Cable leads soldered directly to switch terminals. Standard button is with 1-A switching. Use termination number “99” with all cable numbering charts except multi-pin interconnection. Use code “198” for multi-pin interconnections.
See Switch Section of Switchcraft’s Engineering Design Guide for more details on the ST900.

Part Number	Description
921	Cordette Switch, phone jack termination
921K	Same as 921, plus 6-foot, 2 conductor cable with stripped and tinned leads.

SPECIAL ORDER FEATURES

- 1-B, 1-C, or 1-A + 1-B switching.
- Red, green, blue, white or yellow pushbuttons.
- Legends
- Other body colors
- ST-900 - Custom-molded to any of a large selection of cables. Also many cable terminations, i.e., phone plugs, extension jacks, phono plugs, spade lugs, alligator clips, stripped and tinned leads, etc.

DIMENSIONS ARE FOR REFERENCE ONLY Inch (mm)

* Please visit the product pages on our website for the most up-to-date product information

MOLDED CABLE ASSEMBLIES WITH DIN PLUGS

STYLES RA300 AND ST300

APPLICATIONS

- Computer
- Data Communications
- Instrumentation
- Medical Systems
- Process Controls
- MIDI (Musical Instrument Digital Interface)

FEATURES

- Long life
- 7 different pin configurations: versatile circuitry
- Fully molded plugs sealed against contamination (moisture, dust, dirt)
- Fully shielded: plugs with interference protection/ common ground-shield
- Strain relief: protects internal wire connections
- Flex relief: molded integral with handle for extra protection. No exit stress failures
- Locking: 30° twist locking for anti-vibration protection and ease of engagement
- Straight and coil cords: stock and custom styles, colors, lengths
- Shielded or unshielded cables: stock and custom styles, colors, lengths
- Molded through-panel cable relief: extra cable protection
- Custom wiring/ keying: gives extra choice in mounting and circuit selection
- Custom contact plating: precious and other metals
- Custom logo: your identification on molded plugs
- 100% tested for continuity, shorts, appearance, voltage breakdown (250 or 500 V)

COMPLETE SHIELDING SYSTEMS

Switchcraft also offers shielded DIN receptacles for use with shielded molded cable assemblies. Together they provide a valuable design tool to suppress EMI interference to permit you to meet strict requirements of FCC Docket 20780.

ORDERING

1. Order by part number from guide on page 251.
2. For special order items, contact Switchcraft with details.

SPECIFYING NOTE: See Connector Section of Switchcraft's Engineering Design Guide for mating receptacles.



Style ST307
Termination Code: 307

Style ST324
Termination Code: 324



Style RA374
Termination Code: 374



Style RA356
Termination Code: 356

Switchcraft DIN molded cable assemblies meet increased demand for modern, field-tested connections for a wide range of electrical/electronic applications. Connectors are DIN (Deutsche Industrie Norm) circular type, male or female (locking or non-locking) with 3 to 8 pins/contacts. Units are molded and protected with a rugged handle, and are fully shielded and equipped with advance design cable relief. Switchcraft cable assemblies and mating receptacles adhere to strict requirements of FCC Docket 20780 and offer fully shielded links for data and instrumentation applications of all kinds.

SHIELDING EFFECTIVENESS

Effectiveness of shielding is frequency-dependent; as frequency increases, more shielding is required to maintain comparable shielding effectiveness. The chart below delineates shielding effectiveness with molded cable assemblies with 100% foil shield cables and shielded DIN connectors.

Frequency Range MHz	Shielding Effectiveness, dB
30-500	-30
60-400	-20
500-800	-10

DIMENSIONS ARE FOR REFERENCE ONLY $\frac{\text{Inch}}{(\text{mm})}$

® Registered trademark of Switchcraft, Inc.
Note: Contact your Switchcraft Representative for price and delivery

* Please visit the product pages on our website for the most up-to-date product information

MOLDED CABLE ASSEMBLIES WITH DIN PLUGS (continued)

STYLES RA300 AND ST300 SPECIFICATIONS

ELECTRICAL

Contact Resistance: Cord Plugs and Receptacles. .010 ohms, contact spring/pin; .030 ohms, ground clip/shell.
Control and Switching Receptacles: .015 ohms, contact spring/pin; .020 ohms, switch contacts.
Dielectric Withstanding Voltage: 500 V (rms).
Leakage Resistance: 10^5 MΩ

MECHANICAL

Life: 5000 cycles

Insertion/Withdrawal Forces:		
Number of Contacts	Insertion Force pound/N	Withdrawal Force pound/N
2	3.6/(16)	.45–2.7/ (2–12)
3	5.4/(24)	.67–4.1/ (3–18)
4	7.2/(32)	.90–5.4/ (4–24)
5	9.0/(40)	1.24–6.8/ (5.5–30)
6	10.8/(48)	1.46–8.1/ (6.5–36)
7	12.6/(56)	1.68–9.5/ (7.5–42)
8	14.4/(64)	1.90–10.8/ (8.5–48)

PLUG MATERIALS

Pin Contacts: Silver-plated, copper alloy.
Insulating Washer: Thermoplastic.
Locking Plug Housing: Nickel-plated, die-cast zinc alloy.
Other Housings: Plated steel.
Molded Handle: Flexible thermoplastic. Strain relief matte finish.

NOTE: All connectors meet DIN specifications. Din specification numbers (except for 4-pin, 5-pin 240°) will be furnished on request.

ORDERING

1. See table below for termination descriptions. Termination code is the same number as the plug style (e.g. termination code for a ST305 is 305).
2. See page 251 for ordering guide.

PART NUMBERS – MOLDED CABLE ASSEMBLIES

Part Number	Description	Term. A	Term. B
◊305KD084184	Black coil cord. 15" (381 mm) retracted; 78.74" (2 m) extended. 5 pin male with other end stripped and tinned on cable number W-1301-2.	ST305	—
◊305HJ084184	Black cable cord. 7 feet (2.13 m) in length. 5 pin male with other end stripped and tinned on cable number W-1279-2.	ST305	—
◊306HK042306	Black cable cord. 39.37" (1 m) in length. 6 pin male to 6 pin male on cable number W-1289-2.	ST306	ST306
◊306HK084306	Black cable cord. 78.74" (2 m) in length. 6 pin male to 6 pin male on cable number W-1289-2.	ST306	ST306

◊ Special order only; contact Switchcraft.

FOIL SHIELD CABLES – STRAIGHT

Part Number	Color	Length, inch (mm)
W-1279-2	Black	Length must be specified.
W-1289-2	Black	

	Part Numbers-Male (pins)						
	3@180°	4@210°	5@180°	5@240°	6@240°	7@270°	8@270°
Pin Arrangements	B	D	F	E	G	H	N
Description							
Straight handle.	ST303	ST309	ST305	ST304	ST306	ST307	ST308
Straight handle. 30° twist lock ring fastening, mates with lock flange plugs and receptacles.	ST323	ST329	ST325	ST324	ST326	ST327	ST328
Right-angle handle.	RA353	RA359	RA355	RA354	RA356	RA357	RA358
Right-angle handle. 30° twist lock ring fastening, mates with lock flange plugs and receptacles.	RA373	RA379	RA375	RA374	RA376	RA377	RA378

1. See next page for Pin/Contact arrangements.

DIMENSIONS ARE FOR REFERENCE ONLY Inch (mm)

* Please visit the product pages on our website for the most up-to-date product information

MOLDED CABLE ASSEMBLIES WITH DIN PLUGS (continued)

STYLES RA300 AND ST300

ST300

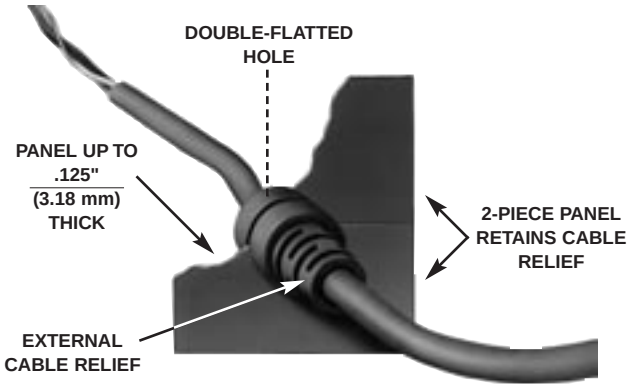

CUTAWAY VIEW OF STYLE ST303

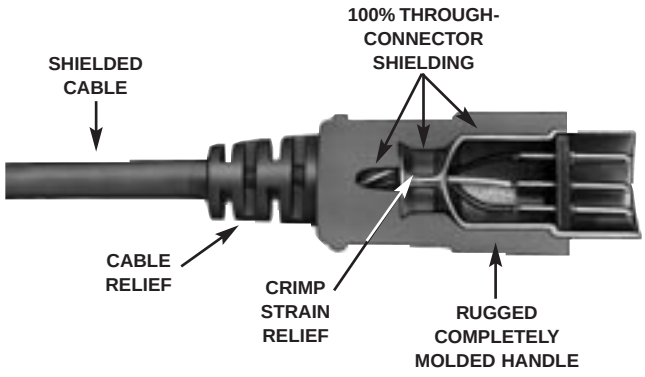

Pin/Contact Arrangements

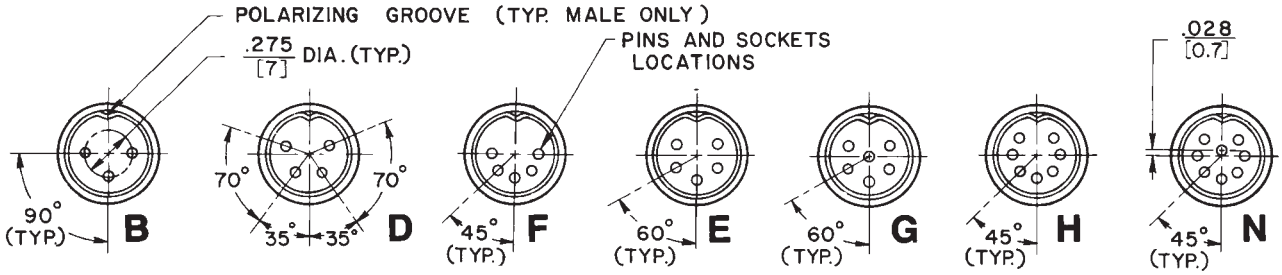

STYLES ST303 TO ST309

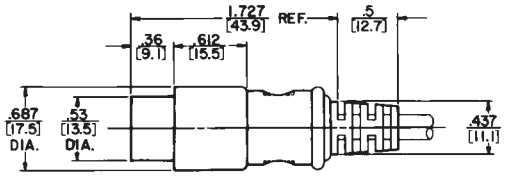

STYLES ST323 TO ST329

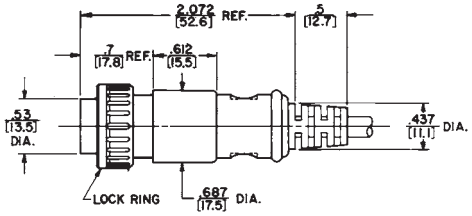

STYLES RA353 TO RA359

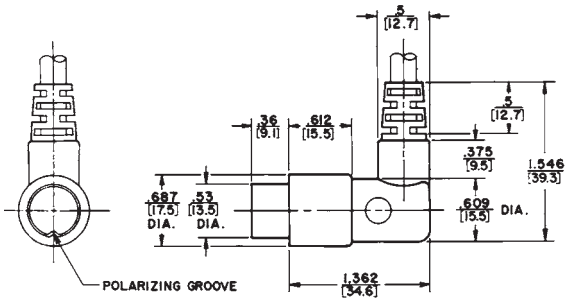

STYLES RA373 TO RA379

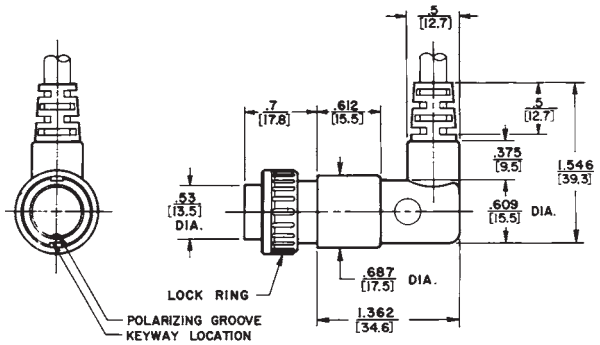

DIMENSIONS ARE FOR REFERENCE ONLY Inch (mm)

® Registered trademark of Switchcraft, Inc.
Note: Contact your Switchcraft Representative for price and delivery

* Please visit the product pages on our website for the most up-to-date product information

MIDI CABLES



FEATURES AND BENEFITS

- Molded connectors provide superior pull-out retention and greater environmental protection than assembled versions.
- All five pins wired active with high definition Belden Brilliance® cable.
- Can be used with any type MIDI instrument.

SPECIFICATIONS

- Belden Brilliance® 24 awg, 4 conductor, braid shielded cable.
- Wiring conforms to MIDI specifications including the clock/sync capabilities on pins 1 and 3.
- Molded 180 degree 5 pin DIN connectors.
- Standard color is black with other colors available on special order.
- PVC molded handles and cable jackets.
- All molded cables are 100% tested for continuity, shorts and voltage breakdown.

ORDERING INFORMATION

1. Order by part number.
2. Contact Switchcraft for more information.

Belden Brilliance® is a registered trademark of Belden Wire and Cable Company.

MIDI CABLES

Part number	Length	Color
MD3	3 foot	Black
MD6	6 foot	Black
MD10	10 foot	Black
MD15	15 foot	Black

STANDARD PRODUCT

- Silver-plated pins
- Belden Brilliance® 24 awg, 4 conductor, braid shielded cable
- Black cable
- Black handle

SPECIAL ORDER

- Gold-plated pins
- Other cable types
- Optional lengths
- Color cable
- Color handle

DIMENSIONS ARE FOR REFERENCE ONLY Inch (mm)

* Please visit the product pages on our website for the most up-to-date product information

MOLDED CABLE ASSEMBLIES WITH MINIATURE, SHIELDED, MOLDED TINI Q-G® PLUGS

STYLE ST600

Tini Q-G® miniature plugs offer 3- through 6-pin/contact connecting with full shielding, small size, RFI-protected termination of analog/digital circuits/equipment. Typical applications are for EIA RS-232C and RS-449 type connections. Plugs retain all Tini Q-G® features, including latchlock, strain relief, flex relief, polarization and "scoop-proof" construction. See Connector Section for details on features and specifications. Shielding of these plugs meets U.S. Navy Tempest requirements with proper cable and mating connector choice.

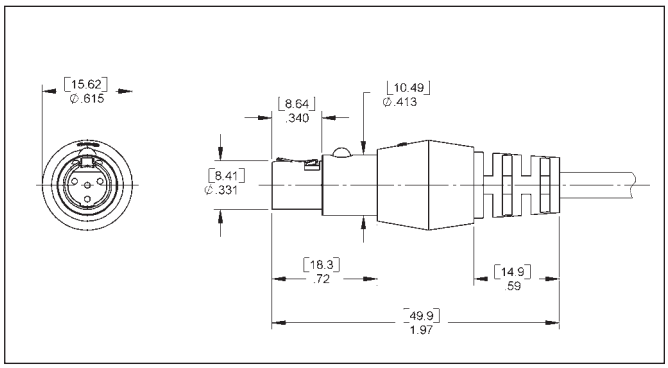

MOLDED CABLES WITH STRAIGHT FEMALE Tini Q-G® PLUGS (Special Order Only)

Three- through 6-contact plugs are molded into a complete cable assembly per customer requirements. Plug includes latch for secure connection, "through-ground" provision, and external cable flex relief. Plugs are molded onto shielded or unshielded cables of .180" – .215" diameter Standard cable color is gray; black, beige and other colors can also be specified. In addition, UL 94V-0 rated cables can be specified.

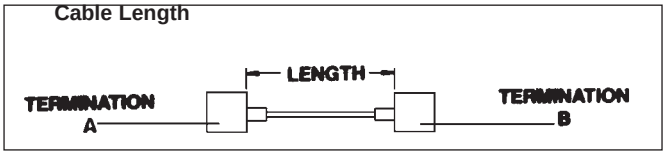

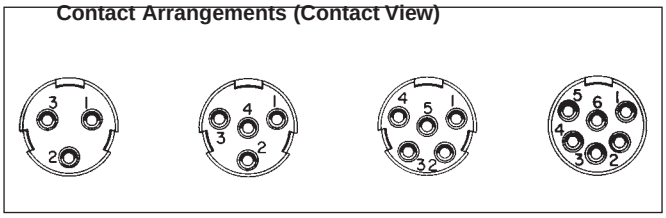

Styles ST603, ST604, ST605, ST626
Termination Codes: 603, 604, 605, 626

Note: Reverse gender molded male cable assembly available. Call factory for details.

Plug Style [2]	Description	Mating Receptacles [1]
◊ST603	3-contact straight female plug (molded)	TA3M, TB3M
◊ST604	4-contact straight female plug (molded)	TA4M, TB4M
◊ST605	5-contact straight female plug (molded)	TA5M, TB5M
◊ST626	6-contact straight female plug (molded)	TA6ML, TB6M

1. See Connector Section of Switchcraft's Engineering Design Guide for other mating receptacles.
2. Termination code is the same as the numbers in the plug style (e.g. termination code for a ST626 is 626). See multi-pin ordering guide on next page.

IMPORTANT SPECIFYING NOTE

◊ Special 3, 4 and 5 pin/contact patterns can be tooled on special order where production quantities warrant special handling. Contact Switchcraft with your requirements.

DIMENSIONS ARE FOR REFERENCE ONLY Inch (mm)

® Registered trademark of Switchcraft, Inc.
Note: Contact your Switchcraft Representative for price and delivery

FAX: 773 792-2129

* Please visit the product pages on our website for the most up-to-date product information

MOLDED CABLE ASSEMBLIES FOR MULTI-PIN INTERCONNECTION

PART NUMBERING SYSTEM (NOT ALL NUMBERS SHOWN)

1. Identify Terminations (both ends)*
2. Indicate Color and Type of Cable
3. Select the Length of Assembly

MULTI-PIN CABLE ASSEMBLIES

Termination	Color	Cable[1]	Length (feet)	Termination (examples)
303	G-Gray	A	036 (3)	3 0 3
304	H-Black	B	060 (5)	3 0 4
305	D-Beige	C	072 (6)	3 0 5
306		D	120 (10)	3 0 6
307		E		3 0 7
308		F		3 0 8
309		---		3 0 9
603		G		6 0 3
604		H		6 0 4
605		J		6 0 5
606		K		6 2 6
		M		1 8 4
		---		1 9 0
		Q		

		U		

1. See next page for cable descriptions.
*** Please refer to page 243 for EN3™ weathertight connector options.**

Note:
• Other cables available on special order. Contact Switchcraft.

TYPICAL PART NUMBERS

STRAIGHT 3-pin DIN PLUG (#303) TO:				
Termination (other end)		Cable	Length (feet)	Part Number[2]
(3-pin DIN)	#303	A	5	**303HA060303**
(3-pin Tini Q-G®)	#603	A	5	**303HA060603[3]**
(Strip and tin)	#184	A	6	**303HA072184**
(Blunt cut)	#190	A	6	**303HA072190**

2. All cables listed here are black.
3. .180" diameter.

STANDARD MULTI-PIN CABLE ASSEMBLY TERMINATION VS. CABLE CROSS-REFERENCE

		Cable												
		W120332	W10891	W10771	W1206#	W12776	W12372	W12916	W12882	W1279#	W1289#	W1290#	W12842	W14421
TERMINATION	RA353	X						X						
	RA354			X						X			X	
	RA355			X						X			X	
	RA356				X						X			X
	RA357					X								
	RA358						X					X		
	RA359		X						X					
	RA373	X						X						
	RA374			X						X			X	
	RA375			X						X			X	
	RA376				X						X			X
	RA377					X								
	RA378						X					X		
	RA379		X						X					
	ST303	X						X						
	ST304			X						X			X	
	ST305			X						X			X	
	ST306				X						X			X
	ST307					X								
	ST308						X					X		
	ST309		X						X					
	ST323	X						X						
	ST324			X						X			X	
	ST325			X						X			X	
	ST326				X						X			X
	ST327					X								
	ST328						X					X		
	ST329		X						X					
	ST603	X						X						
	ST604		X						X					
	ST605			X						X			X	
	ST626										X			X

- Indicates any number
X - Indicates that the cable in this column and the termination in this row can be used together in a standard part number
1. - Other termination/cable combinations may be available or special order.

DIMENSIONS ARE FOR REFERENCE ONLY Inch (mm)

* Please visit the product pages on our website for the most up-to-date product information

STANDARD MULTI-PIN INTERCONNECTION CABLES

FOR MOLDED CABLE ASSEMBLIES ON PAGES 243 THROUGH 251.

Cable Type	Color	Description	Cable Code
W1203-2	Black	3 conductor, 22 AWG stranded, unshielded .18" (4.6 mm) outside diameter, UL style 2960	A
W1089-1	Gray	4 conductor, 22 AWG stranded, unshielded .18" (4.6 mm) outside diameter, UL style 2960	B
W1077-1	Gray	5 conductor, 22 AWG stranded, unshielded .20" (5.1 mm) outside diameter, UL style 2464	C
W1206-1 W1206-2	Gray Black	6 conductor, 22 AWG stranded, unshielded .20" (5.1 mm) outside diameter, UL style 2095	D
W1277-6	Beige	7 conductor, 22 AWG stranded, unshielded .20" (5.1 mm) outside diameter, UL style 2095	E
W1237-2	Black	8 conductor, 22 AWG stranded, unshielded .23" (5.8 mm) outside diameter, UL style 2464	F
W1291-6	Beige	3 conductor, 24 AWG stranded, foil shielded .18" (4.6 mm) outside diameter	G
W1288-2	Black	4 conductor, 24 AWG stranded, foil shielded .18" (4.7 mm) outside diameter	H
W1279-1 W1279-2 W1279-6	Gray Black Beige	5 conductor, 24 AWG stranded, foil shielded .19" (4.8 mm) outside diameter	J
W1289-2 W1289-6	Black Beige	6 conductor, 24 AWG stranded, foil shielded .22" (5.5 mm) outside diameter	K
W1290-1 W1290-6	Gray Beige	8 conductor, 24 AWG stranded, foil shielded .23" (5.7 mm) outside diameter	M
W1284-2	Black	5 conductor, 22 AWG stranded, braid shielded .23" (5.8 mm) outside diameter	Q

DIMENSIONS ARE FOR REFERENCE ONLY $\frac{\text{Inch}}{(\text{mm})}$

® Registered trademark of Switchcraft, Inc.
Note: Contact your Switchcraft Representative for price and delivery

* Please visit the product pages on our website for the most up-to-date product information

MOLDED CABLE ASSEMBLIES
With Micro Plug® Subminiature Phone Plugs

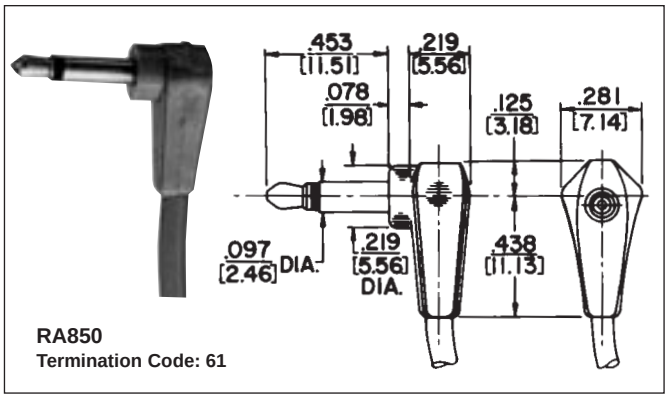

RA850
Termination Code: 61

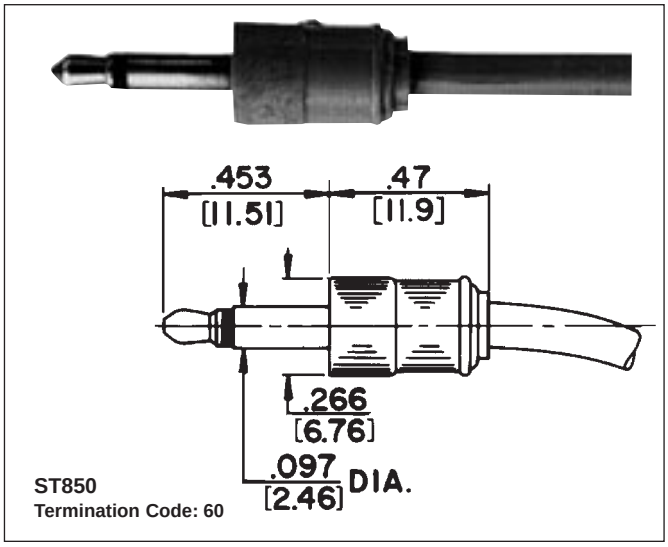

ST850
Termination Code: 60

DESIGN FEATURES
- Thermoplastic insulation between tip and sleeve circuits.
- "Pear-shaped" one-piece tip rod.
- Cable clamp connects cable shield (or second conductor) to plug sleeve.

SPECIFICATIONS
PLUG
Tip and Sleeve: Plated copper alloy.
Insulation: W-1032-1. Molded thermoplastic.
Sleeve Terminal: Tinned copper alloy.
Molded Handle: Plastic.
Standard Colors: Gray, white, black, brown.
Other colors available on special order.

CABLE
Standard Shielded Cable—Type W-1032-1.
NOTE: See Standard Cable Chart on page 260 for details.
Order by part number from guide on page 259.
Special Cable: We will build assemblies on cable furnished by you, .109" (2.77 mm) diameter maximum, or on cable we purchase to your specifications. Jacket must have temperature rating of 60° C minimum.
RA850: Right-angle Micro-Plug® plug with plastic handle. Short body extension. Molded to cables up to .109" (2.77 mm) outside diameter.
ST850: Straight Micro-Plug® plug, small plastic handle, only .47" (11.9 mm) long.
NOTE: Micro-Plug® molded cable assemblies mate with Switchcraft Micro-Jax® TR-2A.

DIMENSIONS ARE FOR REFERENCE ONLY Inch (mm)

* Please visit the product pages on our website for the most up-to-date product information

MOLDED CABLE ASSEMBLIES With Tini Plug® Miniature Phone Plugs

RA700
Termination Code: 50

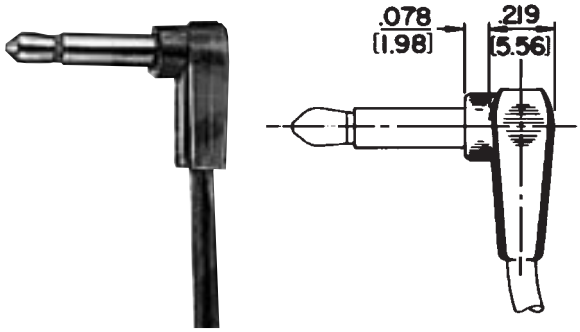

RA710
Termination Code: 51

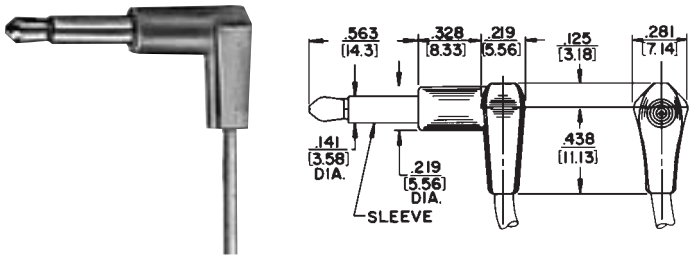

ST740
Termination Code: 46

ST750
Termination Code: 45

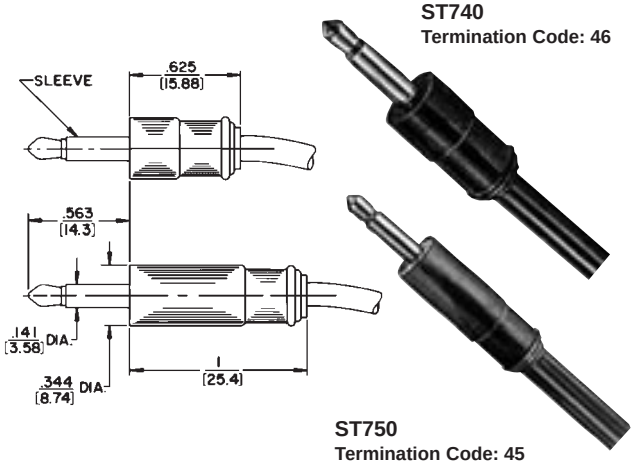

ST700
Termination Code: 41

ST710
Termination Code: 40

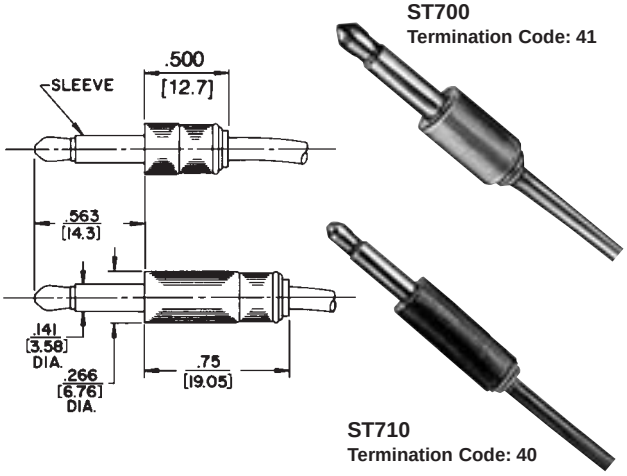

SPECIFICATIONS

PLUG

Tip and Sleeve: Nickel-plated copper alloy.
Cable Clamp: Tin-plated steel.
Insulation: Rigid plastic.
Molded Handle: Plastic.
Standard Colors: Gray, white, black, brown.
Other colors available on special order.

CABLE

Shielded—Type W-1000-1 (suitable for ST740 and ST750 due to cable Outside Diameter).
Shielded—Type W-1032-1 (suitable for all types on this page).
Standard Parallel—Type W-1041-1.

NOTE: See Standard Cable Chart on page 260 for details. Order by part number from guide on page 259.

Special Cable: We will build assemblies on cable furnished by you, up to .160" (4.06 mm) (for ST740 and ST750); .120" (3.05 mm) (for ST700, ST710, RA700, RA710) outside diameter, or on cable we purchase to your specifications. Jacket must have temperature rating of 60°C minimum.

DESIGN FEATURES

- "Pear-shaped" one-piece tip rod soldered directly to cable conductor.
- Cable clamp connects cable shield (or second conductor) to the plug sleeve.

RA700: Right-angle Tini Plug® plug with small plastic handle. Short body extension, recommended for slightly recessed jacks. Molded to cables up to .109" (2.77 mm) outside diameter.

RA710: Right-angle Tini-Plug® plug similar to RA700, except longer body extension where equipment jack is deeply recessed. Molded to cables up to .109" (2.77 mm) outside diameter.

ST700: Straight Tini-Plug® plug offering the shortest and smallest handle.

ST710: Same as ST700, except with longer handle.

ST740: Straight Tini-Plug® with larger outside diameter handle desirable.

ST750: Straight Tini-Plug® with same diameter handle as ST740 and longer handle for easier handling.

DIMENSIONS ARE FOR REFERENCE ONLY Inch (mm)

® Registered trademark of Switchcraft, Inc.
Note: Contact your Switchcraft Representative for price and delivery

* Please visit the product pages on our website for the most up-to-date product information

MOLDED CABLE ASSEMBLIES With Phono Plugs and Phono Extension Jacks

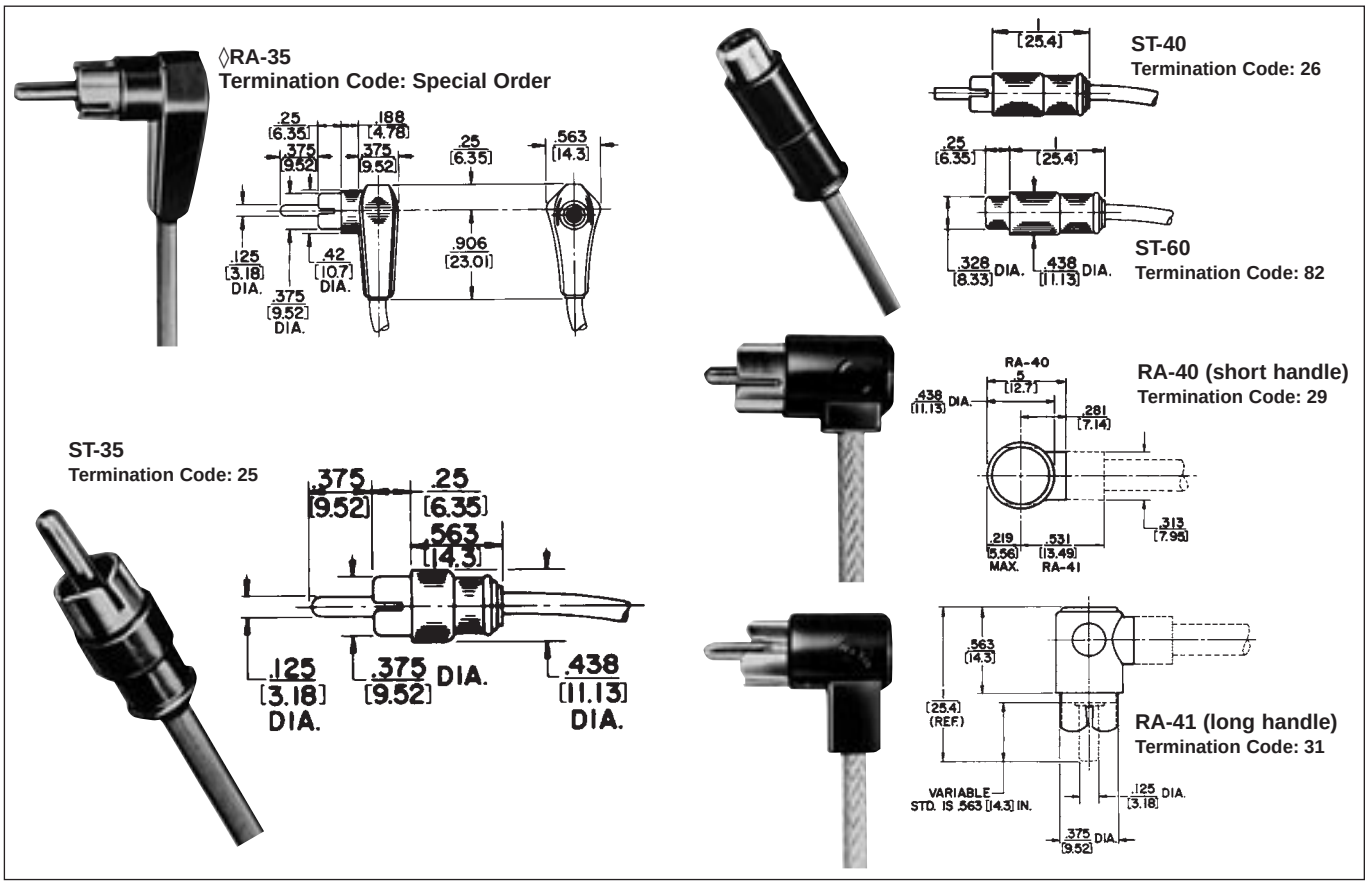

SPECIFICATIONS

PLUG

Tip (prong): Nickel-plated, copper alloy.
Sleeve Connection: Plated copper alloy.
Insulation: Rigid plastic or thermoplastic.
Molded Handle: Thermoplastic.
Standard Colors: Gray, black, brown, red, white, tan, or blue. Other colors available on special order.

EXTENSION JAX

Tip Spring: Nickel-plated, hardened copper alloy.
Sleeve Connection: Plated steel.
Insulation: Rigid plastic.
Molded Handle (both Plug and Jack): Plastic.
Standard Colors: Gray, white, black and brown. Other colors available on special order.

CABLES

RA35, ST35, ST40, ST60:
Standard Shielded Cable—Type W-1000-1.
Standard Parallel Cable (lamp cord)—Type W-1033-1.
RA40, RA41:
Standard Shielded Cable—Type W-1000-1 and W-1032-1.
Standard Unshielded (Parallel) Cable—Type W-1041-1.

NOTE: See Standard Cable Chart on page 260 for details. Order by part number from guide on page 259.

Special Cable: We will build assemblies on cable furnished by you (maximum diameter varies for types RA35, ST35, ST40) up to .20" (5.08 mm) outside diameter for RA40 and RA41 or on cable we purchase to your specifications. Jacket must have a temperature rating of 60 C minimum.

◊RA35: Right-angle phono plug with body extension for recessed jack. Cable: .188" (4.78 mm) outside diameter maximum. Completely shielded. (Available on special order only.)

ST35: Straight phono plug with "finger grip" handle. Handle .438" (11.13 mm) outside diameter. Completely shielded.

ST40: Straight phono plug, similar to ST35, except with longer handle.

ST60: Straight extension jack with "finger grip" handle. Handle .438" (11.13 mm) outside diameter. Completely shielded.

RA40: Compact right-angle phono plug with low profile, high quality insulation, and short .281" (7.14 mm) molded handle for audio and RF connections where space is at a minimum.

RA41: Same as RA40, except handle is .531" (13.49 mm) long.

DESIGN FEATURES

- Can be specified with phenolic, nylon, glass-filled Teflon or polypropylene internal insulators. Polypropylene is recommended for RF connecting applications.
- Applications include stereo, PA and intercoms, audio-visual and telecommunications, including RF connections in 2-way radio and paging systems.

DIMENSIONS ARE FOR REFERENCE ONLY Inch (mm)

* Please visit the product pages on our website for the most up-to-date product information

MOLDED CABLE ASSEMBLIES WITH TINI-EXTENSION® JACKS

SPECIFICATIONS

Housing (or Sleeve): Nickel-plated, copper alloy.
Handle: Molded plastic.
Sleeve Terminal: Plated steel.
Tip Spring: Copper alloy.
Insulation: Rigid plastic. Larger design also has a molded thermoplastic insert.
Standard Colors: Gray white, black, brown. Other colors available on special order.

CABLE

Standard Shielded: Type W-1032-1.
Standard Unshielded: Type W-1041-1.
NOTE: See Standard Cable Chart on page 260 for details. Order by part number from guide on page 259.

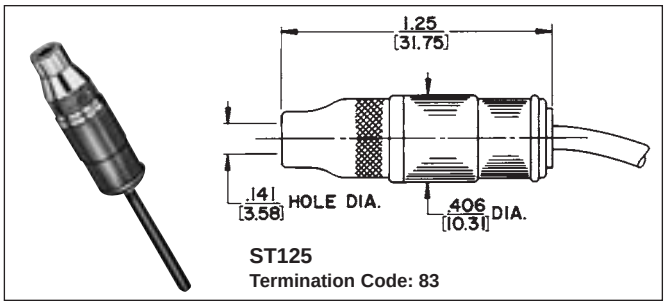

ST125
Termination Code: 83

Special Cable: We will build assemblies on cable furnished by you, up to .160" (4.06 ram) outside diameter—or on cable we purchase to your specifications. Jacket must have temperature rating of 60° C minimum.

ST125: Straight Tini-Extension Jax jacks with same features as ST121, on next page (shielded, 2-conductor), except with .406" (10.31 mm) outside diameter, designed to mate with Switchcraft Tini-Plug® plugs.

MOLDED CABLE ASSEMBLIES WITH LITTEL PLUG® PHONE PLUGS

SPECIFICATIONS

PLUG

Tip: Nickel-plated, copper alloy.
Sleeve: Plated copper alloy.
Insulation: Rigid plastic.
Internal Shield: Plated steel.
Molded Handle: Plastic.
Standard Colors: Gray, white, black and brown.
Other colors available on special order.

CABLE

FOR 2-CONDUCTOR PLUGS:

Standard Shielded Cable–Type W-1000-1.
Standard Parallel Cable (lamp cord)–Type W-1033-1.

FOR 3-CONDUCTOR PLUGS:

Standard Shielded Cable–Type W-1021-1.

NOTE: See Standard Cable Chart on page 260 for details. Order by part number from guide on page 259.

Special Cable: We will build assemblies on cable furnished by you, .188" (4.78 mm) diameter maximum, or on cable we purchase to your specifications. Jacket must have a temperature rating of 60°C minimum.

DESIGN FEATURES

- Molded cables with Littel-Plug phone plugs feature one-piece tip rod assembly connecting tip directly to the soldered connection of the cable conductor.
- Unusual dual-purpose clamp terminal provides completely shielded electrical connection and a cable clamp; connects plug sleeve to cable shield or conductor.
- Right-angle phone plugs (RA202, RA203, RA207 and RA208) molded to cables up to .188" (4.78 mm) outside diameter. RA202, RA203, RA207 and RA208 molded to cables with maximum outside diameter up to .260" (6.6 mm).

RA200
Termination Code: 15

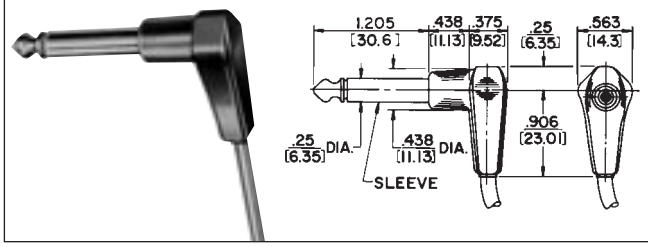

RA205
Termination Code: 13

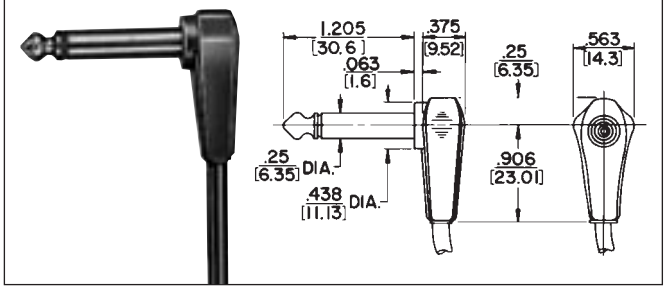

RA200: Right-angle phone plug with plastic handle. Body extension suitable for recessed jack. Completely shielded.

RA205: Right-angle phone plug, similar to RA200, except short body extension and handle for flush mounted jacks.

DIMENSIONS ARE FOR REFERENCE ONLY Inch (mm)

® Registered trademark of Switchcraft, Inc.
Note: Contact your Switchcraft Representative for price and delivery

* Please visit the product pages on our website for the most up-to-date product information

MOLDED CABLE ASSEMBLIES WITH LITTEL PLUG® PHONE PLUGS (continued)

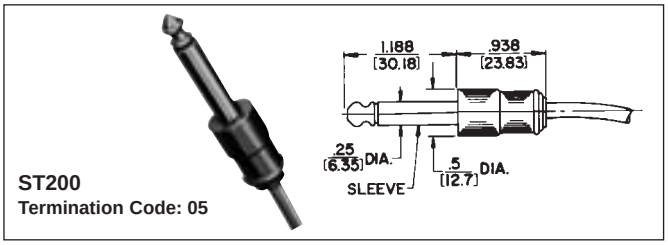

ST200
Termination Code: 05

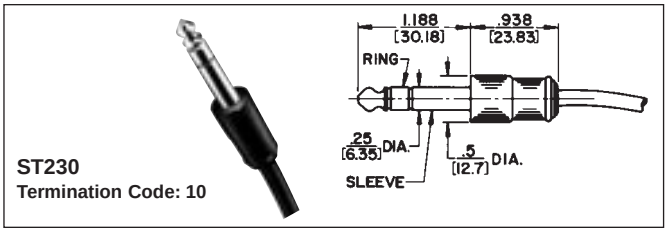

ST230
Termination Code: 10

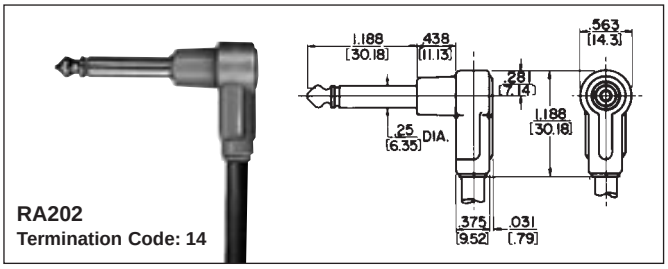

RA202
Termination Code: 14

◊**RA207**
Termination Code: 06

RA208
Termination Code: 07

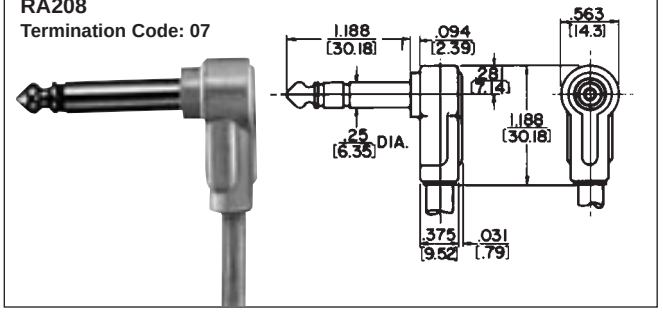

RA202: Right-angle phone plug with plastic handle. Body extension suitable where jack is recessed. RA203 is similar to RA202, except 3-conductor plug.

◊**RA207, RA208:** Right-angle phone plug, similar to RA202, except short body extension. Recommended use with panel mounted jacks. RA208 is similar to RA207, except 3-conductor plug.

◊**RA217:** Special right-angle phone plug, identical to RA200 (previous page); also featuring a unique hook for hanging various types of equipment (such as pillow speakers). Completely shielded. Available on special order only.

ST200: Straight phone plug with "finger grip" handle, but short enough to fit in all equipment.

ST230: Straight 3-conductor phone plug; same features as ST200. Completely shielded.

MOLDED CABLE ASSEMBLIES WITH EXTENSION JAX® PHONE JACKS

ST121, ST131
Termination Code: 80, 81

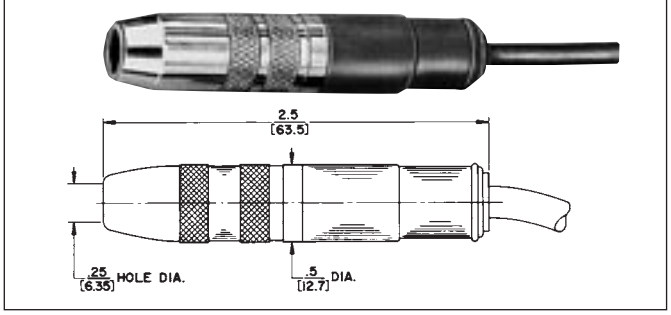

ST121: Straight Extension Jax® jack is a shielded 2-conductor jack with .50" (12.7 mm) outside diameter. Cable clamp connects shield or second conductor to cable. Mates with .25" (6.35 mm) diameter Switchcraft 2-conductor plugs.

ST131: Straight Extension Jax jack, same as ST121, except 3-conductor. Mates with .25" (6.35 mm) diameter Switchcraft 3-conductor plugs.

SPECIFICATIONS

Housing (or Sleeve): Nickel-plated, copper alloy.
Handle: Molded plastic.
Sleeve Terminal: Plated steel.
Tip and Ring Springs: Copper alloy.
Insulation: Rigid plastic. Larger design also has a molded thermoplastic insert.
Standard Colors: Gray, white, black, brown.
Other colors available on special order.

CABLE

Standard Shielded–Type W-1000-1 (for ST121).
Type W-1021-1 (for ST131).
Standard Unshielded–Type W-1033-1 (for ST121).

NOTE: See Standard Cable Chart on page 260 for details. Order by part number from guide on page 259.

Special Cables: We will build assemblies on cable furnished by you, up to .260" (6.6 mm) outside diameter, or on cables we purchase to your specifications. Jacket must have temperature rating of 60° C minimum.

DIMENSIONS ARE FOR REFERENCE ONLY Inch (mm)

* Please visit the product pages on our website for the most up-to-date product information

MOLDED CABLE ASSEMBLIES WITH CABLE CLAMP BANDS

SPECIFICATIONS
MOLDED BAND

Housing: Plastic. Inserts can be added to our molds to include customer's name or trademark. Call for details.
Standard Colors: Gray, white, black, brown. Other colors available on special order.

CABLE*

Standard Parallel Cable (lamp cord)–Type W-1033-1.
Standard Shield Cable–Type W-1072.

ST-91 DESIGN FEATURES

- For use on stereo connecting cables and on monaural and stereo headset cables.
- Prevents further separation of individual leads on "Rip" type cordage.
- Can be used as "Y" junction when used with standard shielded cable such as Switchcraft W-1072; or as a cable clamp for general purpose with Switchcraft W-1033 and W-1050.
- Special assemblies can be built to OEM needs, using various terminal lugs, special receptacles to phone plugs or connectors.

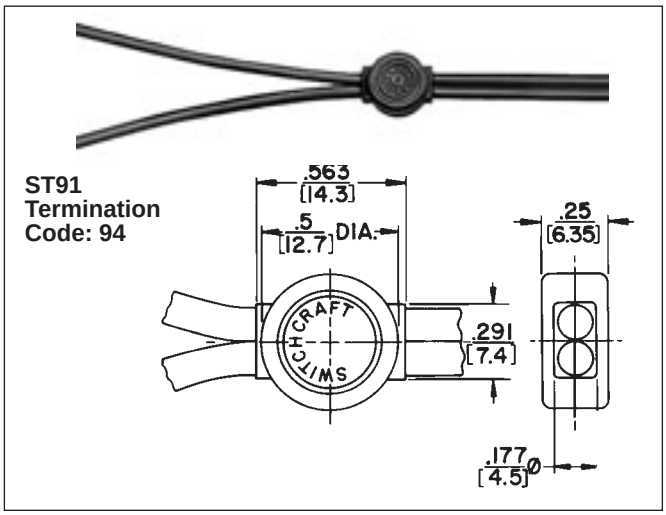

***NOTE:** See Standard Cable Chart on page 260 for details.

Special Cable: We will build assemblies on cable furnished by you (maximum diameter varies for types) or on cables we purchase to your specifications. Jacket must have temperature rating of 60°C minimum.

MOLDED CABLE ASSEMBLIES WITH "Y" JUNCTIONS

SPECIFICATIONS
Y JUNCTION

Housing: Molded Plastic. Inserts can be added to our molds to include customer's name or trademark.
Standard Colors: Gray, white, black, brown. Other colors available on special order.

CABLE*

Standard Shielded Cable–Type W-1000-1.
Standard Shielded Cable–Type W-1021-1.

ST-90 DESIGN FEATURES

- For use on binaural and stereophonic headphones.
- Accommodates 1- and 2-conductor shielded cables.
- Durable, strain and humidity resistant.
- Special assemblies can be built to OEM needs, using terminal lugs, special receptacles to phone plugs or connectors.

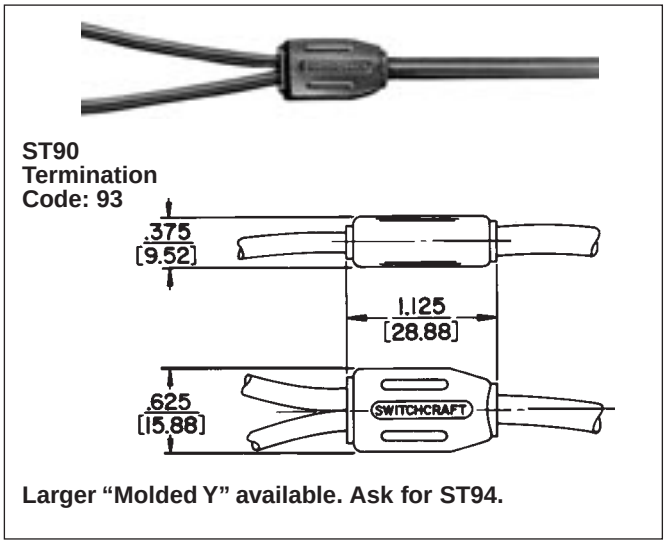

Larger "Molded Y" available. Ask for ST94.

DIMENSIONS ARE FOR REFERENCE ONLY Inch (mm)

® Registered trademark of Switchcraft, Inc.
Note: Contact your Switchcraft Representative for price and delivery

* Please visit the product pages on our website for the most up-to-date product information

MOLDED CABLE ASSEMBLIES PART NUMBERING SYSTEM

TO CREATE A PART NUMBER

1. Identify Terminations (both ends)
2. Indicate Color and Type of Cable
3. Select the Length of Assembly

MOLDED CABLE ASSEMBLIES (Not all numbers shown)

Termination		Color	Cable*	Length (feet)				Termination	
0	5	G-Gray	A	0	1	8	(1.5)	0	5
1	5	H-Black	B	0	2	4	(2)	1	5
2	5	D-Beige	C	0	3	6	(3)	2	5
4	0	W-White	D	0	4	8	(4)	4	0
8	0		E	0	7	2	(6)	8	0
8	2		F	1	2	0	(10)	8	2
8	3		K					8	3
9	9		V					8	4
			W						
			X						
			Y						
			Z						

* See “Cable Types” chart on page 260.

Notes:

- Use any 2-number codes on previous pages for termination number.
- Some configurations will be special orders. Contact Switchcraft.
- Some configurations may not be possible.
- Larger plug (#45) will be supplied in place of #40 when used with cable “A”.

TYPICAL STANDARD PART NUMBERS

Termination (other end)	Cable	Length (feet)	Part Number[1]
STRAIGHT 2-CONDUCTOR PHONE PLUG (#05) TO:			
(phono plug) #05	A	6	**05HA07205**
(stripped wires) #84	A	3	**05HA03684**
PHONO PLUGS (#25) TO:			
(phono jack) #82	A	6	**25HA07282**
DUAL PHONO PLUGS (#25) TO:			
(dual phono jacks) #82	F	10	**25HF12082**
3.5mm MINIATURE PLUG (#40) TO:			
(3.5 mm plug) #40	D	6	**40HD07240**

1. All cables listed here are black.

DIMENSIONS ARE FOR REFERENCE ONLY Inch (mm)

* Please visit the product pages on our website for the most up-to-date product information

STANDARD CABLE GUIDE

FOR MOLDED CABLE ASSEMBLIES ON PAGE 253 THROUGH 259

Cable Type	Color	Description	Cable Code
W1000 W1000-1 W1000-2	Beige Gray Black	50Ω coax, plastic jacket over spiral shield with 22 AWG stranded center conductor; .156" (3.96 mm) outside diameter. Average capacity 31 pF/feet, UL style 1354	A
W1021-1 W1021-1	Gray Black	2 conductor, plastic jacket over shield with 2, 22 AWG conductor; .20" (5.2 mm) outside diameter. Average capacity 20 pF/feet between conductor; 55 pF/feet between shorted conductor to shield; 32 pF/feet each conductor to shield, UL style 2092	B
W1013-1 W1013-2	Gray Black	2 conductor, plastic unshielded parallel with 2, 18 AWG stranded conductor; .11" (2.8 mm) x .21" (5.3 mm) outside diameter, UL type SPT-1	K
W1032-1 W1032-2	Gray Black	48Ω coax, plastic jacket over spiral shield with 25 AWG stranded center conductor; .11" (2.8 mm) outside diameter. Average capacity 35 pF/feet	D
W1041-1 W1041-2	Gray Black	2 conductor, plastic unshielded tandem cable with 2, 24 AWG stranded conductor; .06" (1.5 mm) x .12" (2.9 mm)	Y
W1065-2	Black	50Ω coax, plastic jacket over braid shield with 26 AWG stranded center conductor; .1" (2.5 mm) outside diameter. Average capacity 30 pF/feet, RG-174	E
W1072-1	Gray	2 conductor, twin coax, plastic jacket over 2 individually shielded 25 AWG parallel conductor. Average capacity 36 pF/feet, recommended for headset applications	F
W1230-1 W1230-4 W1230-5	Gray Beige White	2 conductor,plastic unshielded with 2, 18 AWG stranded conductor; .25" (6.4 mm) outside diameter, UL type SVT	V
W1243-2	Black	75Ω coax, plastic jacket over shield with 27 AWG stranded center conductor; .15" (3.8 mm) outside diameter. Average capacity 20.5 pG/feet, UL style 1354 or 1436	X
W1033-1 W1033-2	Gray Black	2 conductor, plastic unshielded parallel with 2, 20 AWG stranded conductor; .10" (2.54 mm) x .19" (4.7 mm) outside diameter, UL style 2433	C
W1096-2	Black	2 conductor, plastic unshielded parallel with 2, 22 AWG stranded conductor; .08" (1.9 mm) x .15" (3.8 mm) outside diameter	Z

See page 251 for Cable Assembly Termination vs. Cable Cross Reference Table.

® Registered trademark of Switchcraft, Inc.
Note: Contact your Switchcraft Representative for price and delivery

FAX: 773 792-2129

* Please visit the product pages on our website for the most up-to-date product information

CROSS REFERENCE GUIDE

STANDARD CABLE ASSEMBLY TERMINATION vs. CABLE CROSS-REFERENCE

		Cable										
		W10000#	W10211	W10113#	W10032#	W10041#	W10652	W10721	W12301#	W12432	W10331#	W10962
TERMINATION	RA40	X		X	X	1	1	2		X	X	1
	RA41	X		X	1	1	1	2		X	X	1
	RA200	X		X	1	1	X	2		X	1	1
	RA202	X		X	1			2	X	X	1	1
	RA205	X		X	1	1	X				1	
	RA207	X		X	1			2	X	X	1	1
	RA700				X	X	X	2				
	RA710				X	X	X	2				
	RA712A			X							1	1
	RA722A			X							1	1
	RA760	X		X	X	1	1	2	X	X	X	X
	RA765	X		X	X	1	1	2	X	X	X	X
	RA850				X	X	X	2		X		X
	ST35	X	X	X	X	1	X	2		X	X	1
	ST40	X		X	1	1	1	2		X	X	1
	ST60	X		X	1	1	1	2		X	X	1
	ST121	X		X	1		1	2	X	X	X	1
	ST123				X	X	X	2				3
	ST125	X			X	X	X	2		X		X
	ST131		X									
	ST200	X		X	1	1	X	2	X	X	1	1
	ST230		X									
	ST700				X	X	X	2				X
	ST710				X	X	X	2				X
	ST740	X		X	1	1	1	2		X	X	X
	ST750	X		X	1	1	1	2		X	X	X
	ST760	X			X	1	1	2		X	X	1
	ST760L			X					X			
	ST765	X			X	1	1	2		X	X	1
	ST765L			X					X			
	ST850	3		3	X	X	X	2		3	3	3
	ST900	X	X	X	1	1	1		X	X	X	X

- Indicates any number.
X - Indicates that the cable in this column and the termination in this row can be used together in a standard part number.
1 - These cable assemblies may use heat shrink tubing under overmolded terminations.
2 - These cable assemblies have two of the same termination at one end. Each termination is molded in a different color.
3 - These cable assemblies use a larger overmold than is pictured in the Engineering Design Guide.
4 - Other termination/cable combinations may be available on special order.

* Please visit the product pages on our website for the most up-to-date product information

1/4" TELEPHONE PATCH CORDS

Switchcraft premium 3-conductor single patch cords are designed for rugged, noise-free performance. **Nickel-plated** plugs eliminate the need for periodical cleaning which keeps your audio signals clear. Color cords provide instant visual identification with a choice of three lengths. All cables are fully shielded with rugged, braided thermoplastic outer jackets. Plug handles are black. Audio patch cords are available with other lengths and brass plugs, if desired. Contact Switchcraft for specifying assistance and cable length tolerances.



SERIES 20Q

MIL TYPE 1/4" PATCH CORDS

Switchcraft Patch Cords are available in a variety of types to meet requirements of communication, industrial and telephone switchboard applications. Patch cords are constructed of high quality bronze tinsel covered with thermoplastic insulating material with braided shield and black thermoplastic braid woven over the insulated conductors.

Switchcraft MIL-type Littel-Plug® and Twin-Plug® phone plugs with brass finish are attached to these quality cords. Design and material used in strict accordance with Specification MIL-P-642(A). Cords have an identifying label on cord and hot stamping on plug handle.

SERIES 20Q 3-CONDUCTOR TELEPHONE-TYPE PATCH CORDS

1/4" diameter plug fingers, black handle, color cable

PART NUMBERING SYSTEM

2	0	Q		2	0		
PLUG		**CABLE**	**LENGTH***	**PLUG**		**FINGER FINISH**	**CABLE COLOR***
3-cond.		Shielded 2-cond. nylon-braid sheath	D - 2' F - 3' H - 4'	3-cond.		N-Nickel plated B-Natural brass	0-Black 2-Red 5-Green 6-Blue

* Contact Switchcraft for other lengths and colors.



SERIES 18Q
Red handle, brass finger

SERIES 18Q: Used in broadcasting, studio recording, sound, and other applications where space is at a premium. Utilizes Series 88Q 2-conductor shielded cord, with a Switchcraft 482 Littel-Plug phone plug with red handle (PJ-051) connected to each end. Shield grounded to sleeve of both plugs, and two leads wired tip-to-tip, ring-to-ring. Standard cord color: black. Other lengths and colors: gray, red, green (special order). Series 18Q provides same or greater number of circuits in a given space than cords using "Twin-Plug" dual telephone plugs.

Length feet (m)	Series 18Q, Plug Type 482	
	Part Number	Replacement Cord Used
0.5 (.152)	**18QA18**	89QA89
1 (.305)	**18QB18**	89QB89
2 (.610)	**18QD18**	89QD89
3 (.914)	**18QF18**	89QF89
4 (1.219)	**18QH18**	89QH89
6 (1.829)	**18QK18**	89QK89
10 (3.048)	**18QN18**	—

DIMENSIONS ARE FOR REFERENCE ONLY Inch (mm)

® Registered trademark of Switchcraft, Inc.
Note: Contact your Switchcraft Representative for price and delivery

* Please visit the product pages on our website for the most up-to-date product information

COMBINATION PATCH CORDS



CPC102A

Series CPC Combination Patch Cords provide convenient interconnections between standard telephone-type jacks (3-conductor, .25" inside diameter sleeve) and miniature telephone-type jacks (3-conductor, .173" inside diameter). Series CPC cords are ideal for connection in telephone, data processing and other telecommunication applications where both standard and miniature jacks are available for patching.

FEATURES

1. Rugged, telephone-quality tinsel conductors, with slate gray, braided thermoplastic jacket with flex relief reinforcements at point of entry into each plug handle.
2. Series CPC cords, eliminates the need for a separate adapter or field-fabricated combination cords.
3. Switchcraft (on special order) can assemble cords of any practical length.

◊ **SERIES CPC101:** Standard 2-conductor, 413 Twin-Plug (.25" outside diameter finger) on one end; miniature, 3-conductor TT253, TT Twin-Plug (.173" outside diameter finger) on the other end. One twin plug tip to miniature plug ring. All sleeves connected to cable shield. 6, 10, 15, 20 and 25 foot lengths.

◊ **SERIES CPC103:** Standard 2-conductor, 413 Twin-Plug (.25 " outside diameter finger) on one end with cable-connected shield to sleeve; two independent tip circuits. Other end miniature, TT261, TT Twin-Plug (.173" outside diameter finger) in the same wiring. 6, 10, 15, 20 and 25 foot lengths.

◊ **SERIES CPC104:** Standard 3-conductor, 414 Twin-Plug (.25 " outside diameter finger) on one end; miniature 3-conductor, TT263, TT Twin-Plug on other end. Wired at 5-conductor tips-to-tips, rings-to-rings, all sleeves to cable shield. 6, 10, 15, 20 and 25 foot lengths.

Part Number	Length	Description
◊CPC102A	6 inches	Standard 3-conductor (483) telephone plug (.25" outside diameter finger) on one end; miniature (253) tini-telephone® 3-conductor (.173" outside diameter. finger) plug on other end.(See Schematic).
◊CPC102D	2 feet	
◊CPC102F	3 feet	
◊CPC102K	6 feet	
◊CPC102N	10 feet	
◊CPC102R	15 feet	
◊CPC102T	20 feet	
◊CPC102U	25 feet	

◊ Special order only; contact factory for price and delivery.

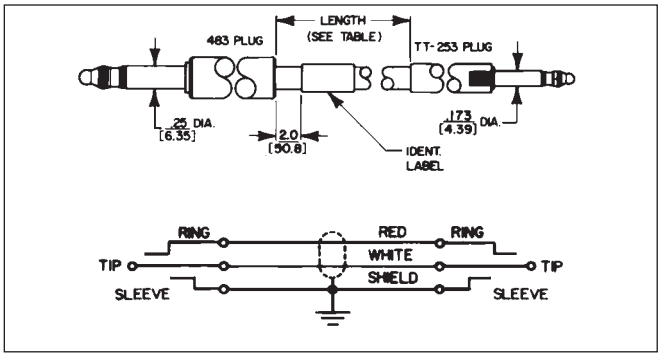

MIL-TYPE 1/4" TWIN PATCH CORDS



Series 22Q

SERIES 22Q: For use in telephone patching, broadcasting, studio recording, high-quality public address systems, telephone, telecommunications, and instrumentation systems. Uses 4-conductor shielded cord with Switchcraft Number 414 Twin-Plug® connected to each end. Shield is grounded to sleeve of each plug and individual leads wired tip-to-tip and ring-to-ring. Twin-Plug 414 is a 6-circuit plug with electrically independent tip circuits and ring circuits, with plug fingers spaced on .625" center to fit standard twin jacks. A self-aligning feature accommodates errors in jack location. Standard lengths: 1 feet to 10 feet; standard color: black. Other lengths and colors are available.

Part Number	Length, feet (m)
◊22QB22	1 (.305)
◊22QD22	2 (.610)
◊22QF22	3 (.914)
◊22QK22	6 (1.829)
◊22QN22	10 (3.048)

◊ Special order only; contact factory for price and delivery.

DIMENSIONS ARE FOR REFERENCE ONLY Inch (mm)

* Please visit the product pages on our website for the most up-to-date product information

MINIATURE TT® BRAIDED PATCH CORDS



TT720
Single, 2-Conductor



TT740
Single, 3-Conductor



TT860
Twin, 3-Conductor

CABLE AND PLUG FINGER COMBINATIONS

2-Conductor Patch Cord. Two-conductor Bantam-Type® plug, Switchcraft TT251 at each end. Shield (75% coverage) is grounded to each plug sleeve. Tinsel conductor is wired tip-to-tip. Standard color: black. Other colors and lengths are available on special order.

Part Number	Description	Length, feet (m)
◊TT722	2-conductor single, brass finish on plug fingers, black handle and cord. Identifying label on cord.	1 (.305)
◊TT724		2 (.61)
◊TT726		3 (.914)
◊TT727		4 (1.219)
◊TT728		5 (1.524)
◊TT729		6 (1.829)

3-Conductor Patch Cord. 3-conductor Bantam-Type plug (Switchcraft TT253) at each end. Wiring is the same as TT724, except also has ring-to-ring wiring.

Part Number	Description	Length, feet (m)
◊TT741	3-conductor single, brass finish on plug fingers, black handle and cord. Identifying label on cord.	0.5 (.152)
◊TT742		1 (.305)
◊TT744		2 (.61)
◊TT746		3 (.914)
◊TT747		4 (1.219)
◊TT748		5 (1.524)
◊TT749		6 (1.829)

Part Number	Description1, 2	Length, feet (m)
◊TT741N0	3-conductor single, nickel-plated plug fingers (brass available) black handles and cord.	0.5 (.152)
◊TT742N0		1 (.305)
◊TT744N0		2 (.61)
◊TT746N0		3 (.914)
◊TT747N0		4 (1.219)

3-Conductor Twin Patch Cords. 5-circuit patch cords use two 3-conductor twin Bantam-Type plugs, Switchcraft TT-263, at each end. Sleeve circuits are wired common, and tinsel conductors are wired tip-to-tip and ring-to-ring (see schematic). Polarizing handle notches indicated plug fingers with interconnected tip and rings. Standard color: black. Other colors and lengths are available on special order.

Part Number	Description	Length, feet (m)
◊TT861	3-conductor twin, brass finish on plug fingers, black handle and cord. Identifying label on cord.	0.5 (.152)
◊TT862		1 (.305)
◊TT864		2 (.61)
◊TT866		3 (.914)
◊TT867		4 (1.219)
◊TT868		5 (1.524)
◊TT869		6 (1.829)

1. For brass fingers, substitute "B" for "N" in part number. Special order only.
2. "0" in part number denotes black handle and cord. Substitute the following for "0" to specify other color cords:
   2–Red 5–Green 6–Blue

◊ Special order only; contact Switchcraft for prices and delivery.

CABLE AND PLUG FINGER COMBINATIONS

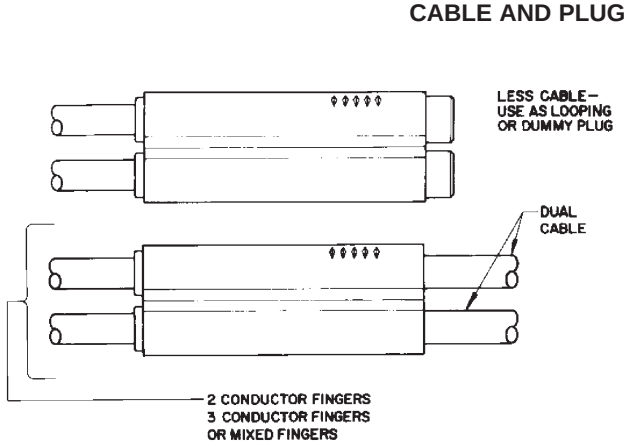

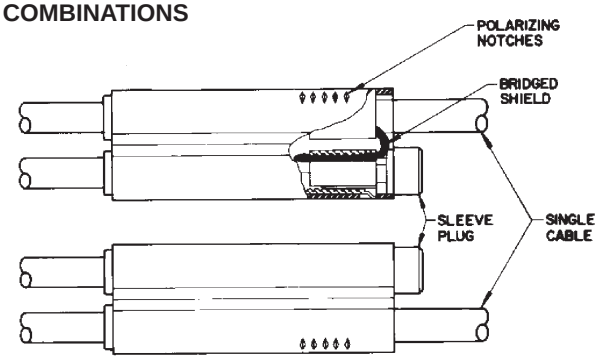

DIMENSIONS ARE FOR REFERENCE ONLY Inch / (mm)

® Registered trademark of Switchcraft, Inc.
Note: Contact your Switchcraft Representative for price and delivery

* Please visit the product pages on our website for the most up-to-date product information

MINIATURE TT® MOLDED PATCH CORDS (continued)

Part Numbers		Length
Series TT100	Series TT120	feet (m)
◊TT101	◊TT121	0.5 (.152)
◊TT102	◊TT122	1.0 (.305)
◊TT103	◊TT123	1.5 (.457)
◊TT104	◊TT124	2.0 (.610)
◊TT105	◊TT125	2.5 (.762)
◊TT106	◊TT126	3.0 (.914)
◊TT107	◊TT127	4.0 (1.219)
◊TT108	◊TT128	5.0 (1.524)
◊TT109	◊TT129	6.0 (1.829)
◊TT110	◊TT130	7.0 (2.134)
◊TT111	◊TT131	8.0 (2.438)
◊TT112	◊TT132	9.0 (2.743)
◊TT113	◊TT133	10.0 (3.05)
◊TT114	◊TT134	11.0 (3.353)
◊TT115	◊TT135	12.0 (3.658)

Part Numbers		Length
Series TT140	Series TT160	feet (m)
◊TT141	◊TT161	0.5 (.152)
◊TT142	◊TT162	1.0 (.305)
◊TT143	◊TT163	1.5 (.457)
◊TT144	◊TT164	2.0 (.610)
◊TT145	◊TT165	2.5 (.762)
◊TT146	◊TT166	3.0 (.914)
◊TT147	◊TT167	4.0 (1.219)
◊TT148	◊TT168	5.0 (1.524)
◊TT149	◊TT169	6.0 (1.829)
◊TT150	◊TT170	7.0 (2.134)
◊TT151	◊TT171	8.0 (2.438)
◊TT152	◊TT172	9.0 (2.743)
◊TT153	◊TT173	10.0 (3.05)
◊TT154	◊TT174	11.0 (3.353)
◊TT155	◊TT175	12.0 (3.658)

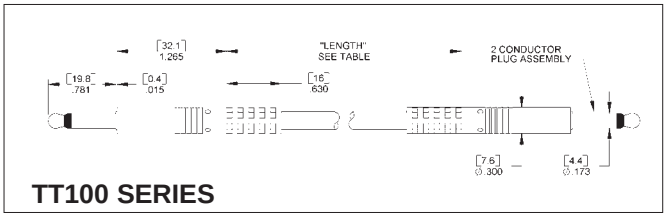

TT100 SERIES

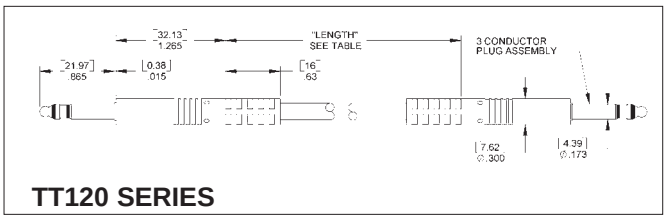

TT120 SERIES

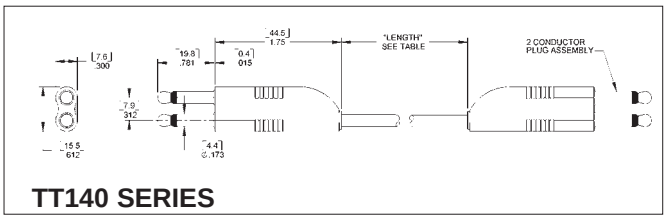

TT140 SERIES

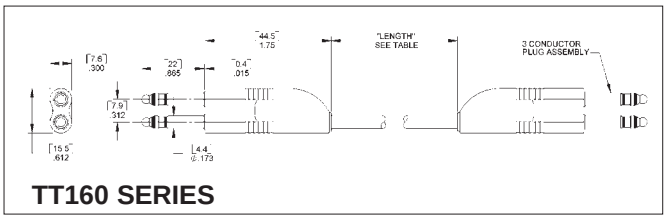

TT160 SERIES

TELEPHONE COUPLERS AND ADAPTERS

TELEPHONE PATCH COUPLERS

TT-couplers interconnect 2- or 3-conductor patch cords terminated with Switchcraft standard or tini-telephone® plugs, also similar telephone plugs with compatible finger shape and dimensions.

Part Number	Handle Color	Cond.	Input ID Inch (mm)	Output ID Inch (mm)
◊ TT281	Black	2	.175 (4.44)	.175 (4.44)
◊ TT282	Red	2		
◊ TT283	Black	3		
◊TT284	Red	3		
◊ TT289	Metal	3	.175 (4.44)	.25 (6.35)
361A	Metal	2	.25 (6.35)	.25 (6.35)
◊ 362A	Metal	3		

◊ Special order only; contact factory for prices and delivery.

TT-REPLACEMENT CORDS

Series TT700 cords have bronze tinsel conductors covered with thermoplastic insulation. A braided shield surrounds the conductors, and the cord is finished with a braided black thermoplastic jacket. Cord ends are reinforced to accept the internal threaded end of a TT-Phone Plug® plug. Used as a replacement cord for Series TT720 and TT740 patch cords, and used on TT-Twin Plug® plugs, Series TT260, in dual cable assemblies with 2- and 3-conductor (or combinations) plug fingers requiring independent tip, ring and sleeve circuits, and for single cable assemblies where supplementary cross-over wiring is needed for common tip, ring and/or sleeve circuits.

◊**TT701** - Length 6" (152.4 mm).
◊**TT709** - Length 6' (1.829 m).

DIMENSIONS ARE FOR REFERENCE ONLY Inch (mm)

* Please visit the product pages on our website for the most up-to-date product information

VIDEO PATCH CORDS

Switchcraft new broadcast series video patch cords are available in eight base ten color codes. Our cable is a high performance serial digital 75 Ohm RG59 type. This unique low-loss cable is ideal for “True” 75 Ohm HD patching as well as conventional analog signals.
The jacket is made flexible with very low retract memory.



Midsize Video Patch
VMP

FEATURES:

* Rugged nickel-plated handles knurled for positive finger grip.
* Flexible black "boot" placed on all cable colors for more positive grip and cable strain relief.
* Overall flexible jacket for easy coil and low retract memory.

SPECIFICATIONS:

Plug Housing:	Nickel-plated, copper alloy.	
Plug Contact Pin:	Gold-plated, copper alloy.	
Cable:	Conductor:	22 AWG (19 x 34) Stranded BC
	Shield:	95% BC Braid
	Dielectric:	.146", 3.70mm, Cellular (Foam) PE
	Jacket:	Matte Finish PVC
	Nom. Imp:	75 Ohm

VP				VMP		
Video Patch	Length (Feet)	Cable Color		Video Patch	Length (Feet)	Cable Color

Part Numbering System Video Patch Cords	Video Patch	Length (Feet)
Standard .090 WECO	**VP**	
Midsize Video Patch	**VMP**	

Colors		Color Code	Stock Lengths
			1'
Black	=	BK	2'
Red	=	R	3'
Orange	=	O	4'
Yellow	=	Y	5'
Green	=	GN	6'
Blue	=	BL	7'
Purple	=	P	8'
Gray	=	GY	9'
			10'

(Custom lengths are available by request)



Standard .090 WECO
VP

DIMENSIONS ARE FOR REFERENCE ONLY Inch (mm)

® Registered trademark of Switchcraft, Inc.
Note: Contact your Switchcraft Representative for price and delivery

* Please visit the product pages on our website for the most up-to-date product information

3-CONDUCTOR TT PATCH CORDS: ANALOG / AES/EBU AUDIO AND RS422 PATCHING

Switchcraft single 3-conductor TT audio patch cords have now been designed with a low capacitance cable which at 110 Ohms is ideal for digital audio AES/EBU and SMPTE Mtime code patching. The overall jacket is now flexible in eight colors. The nickel plated plugs allow for non-tarnishing and the overmolded handle-boot reduces strain off the cable when pulled.

Switchcraft dual 3-conductor TT patch cords have also been redesigned with an overall flexible cable and six colors to choose from. Like the single TT the dual plugs are nickel plated and flexible. These cords work with all Switchcraft TT stereo spaced bays for analog audio and RS422 data patching.



Dual Bantam TT
TTD

SPECIFICATIONS

Standard plug terminations are single 3-conductor TT.
Plug handle is molded thermoplastic.

Plugs: Tip Rod, Ring and Sleeve - Copper Alloy
Cable: 26 AWG (30x40) OFBC, 110 Ohm Low Capacitance. Jacket is Matte PVC

TT		
Tiny Telephone	Length (Feet)	Cable Color

TTD		
Tiny Telephone Dual	Length (Feet)	Cable Color

Part Numbering System Video Patch Cords	Video Patch	Length (Feet)	Cable Color
Single Bantam TT	**TT**		
Dual Bantam TT	**TTD**		

TTD Not available in purple or gray.

Colors		Color Code	Stock Lengths
			1'
Black	=	BK	2'
Red	=	R	3'
Orange	=	O	4'
Yellow	=	Y	5'
Green	=	GN	6'
Blue	=	BL	7'
Purple	=	P	8'
Gray	=	GY	9'
			10'

(Custom lengths are available by request)
1 Foot (12" inches) equals 3.28 meters



Single Bantam TT
TT

DIMENSIONS ARE FOR REFERENCE ONLY Inch (mm)

* Please visit the product pages on our website for the most up-to-date product information

® Registered trademark of Switchcraft, Inc.
Note: Contact your Switchcraft Representative for price and delivery

* Please visit the product pages on our website for the most up-to-date product information

MINIATURE KEYBOARD SWITCHES

IBS MINIATURE SWITCHES

SERIES 98000R

Momentary IBS switches provide cost-effective versatility for a wide range of electrical/electronic applications including switching analog and digital signals in business systems, public address, test instruments, medical, EDP (computer), input devices and peripheral equipment, local area network, telecommunication, digital transmission equipment, telephone systems and attachments and calculators. Convenient modular design allows quick assembly to PC boards. These switches are also available in multiple station assemblies (see page 308).

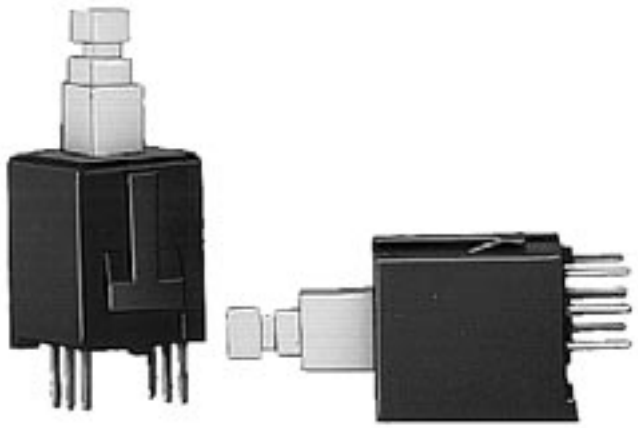

SPECIFICATIONS

MECHANICAL

Switch Actuation: Momentary
Plunger Travel: .144" (3.66 mm).
Actuation Force (Full Travel): 12-15 ounce (340-425 grams).
Life: 1 million operations.

ELECTRICAL

UL approved at .25 A @ 28V DC and .125 A @ 125V AC

MATERIALS

Housing: Molded thermoplastic UL 94V-0
Plunger: Molded thermoplastic UL 94V-0.
Contactors: Copper alloy.
Terminals: Copper alloy, solder-plated.
Contact Surfaces: Gold-plated.

MOUNTING

Switches have .157" (4 mm) long PC terminals for mounting on single- or double-sided PC boards up to .094" (2.4 mm) thick on 0.394" (10 mm) minimum centers in rows or arrays. 0.394" (10 mm) PC terminals available on special order. Rugged molded-in standoff legs provide stable mounting and clearance for PC board cleaning.

ORDERING STANDARD SWITCHES

Order switches and pushbuttons by part numbers from table.

PART NUMBERS

Part No.[1]	Description	Circuit	Dim. A
982A01R	Momentary	1-A	.157" (4 mm)
982A03R		1-C	
982A06R		2-C	

1 Order pushbuttons separately.

ORDERING SPECIAL SWITCHES

Contact your Switchcraft representative with full specifying details.

SPECIAL ORDER FEATURES

- Other circuitry - 1B, 2A or 2B
- Longer terminals - .394" (10 mm) long.

IBS SWITCH CATALOG NUMBERING SYSTEM

98 X X XX D R

SERIES •
98 - 98000R

MECHANICAL FUNCTIONS •
2 - Momentary

TERMINALS •
A - .157" (4 mm)
◊ B - .394" (10 mm)

◊ D - Make-Before-Break (Shorting Contacts)
(Use with 03, 06 circuits only when required.)

• CIRCUITS
01 - 1A
◊ 02 - 1B
03 - 1C*
◊04 - 2A
◊05 - 2B
06 - 2C

◊ Special order only; contact Switchcraft for price and delivery.
* Non-shorting (break-before-make) contacts

DIMENSIONS ARE FOR REFERENCE ONLY Inch (mm)

* Please visit the product pages on our website for the most up-to-date product information

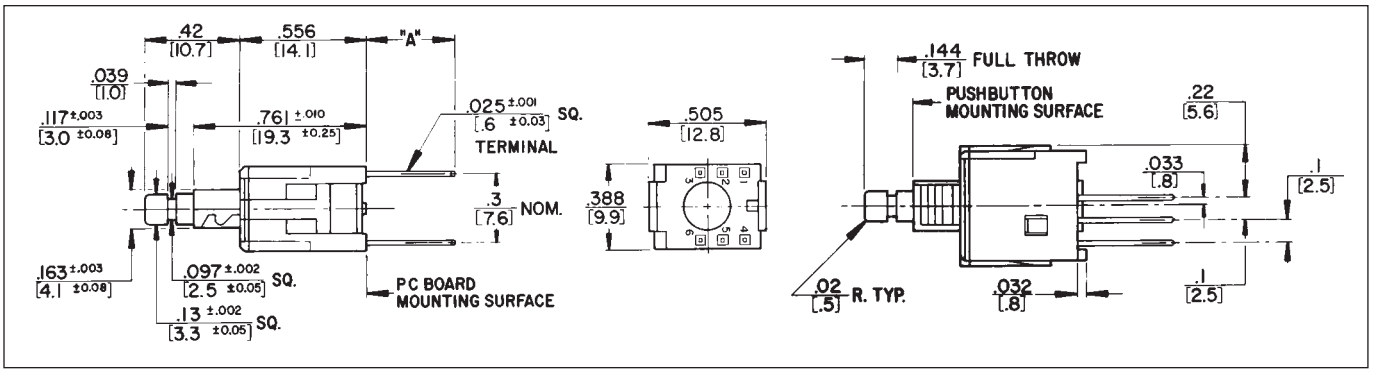

TERMINAL FUNCTION BY TERMINAL NUMBER

	First Pole[1]			Second Pole		
Circuit	N.O.	N.C.	Common	N.O.	N.C.	Common
1-A	3	-	2	-	-	5*
1-B	-	1	2	-	-	5*
1-C	3	1	2	-	-	5*
2-A	3	-	2	6	-	5
2-B	-	1	2	-	4	5
2-C	3	1	2	6	4	5

*Pin 5 is used as a support pin for switch mounting and has no electrical connection. 1. N.O.= normally open; N.C.= normally close.

RECOMMENDED PC BOARD LAYOUT (.300 x .100) (Component Side)

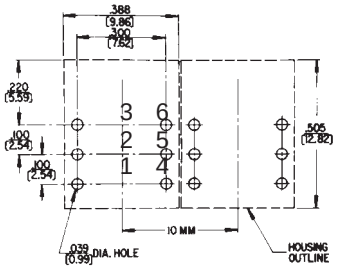

KEYBOARD SWITCH PUSHBUTTONS

Pushbuttons designed for IBS switches are available in white, black, red, blue, and gray. Other colors are available on special order. Pushbutton faces are concave for operator convenience and can be mounted either horizontally or vertically. Pushbuttons must be ordered separately, but may be factory installed, if desired, at extra cost.

TYPE I  TYPE II

PART NUMBERS

Type I	Type II	Color	Type I	Type II	Color
P2936	P2951	White	P2941	P2956	Blue
P2937	P2952	Black	P2942	P2957	Gray
P2938	P2953	Red	◊P2943	◊P2958	Brown
◊P2939	◊P2954	Yellow	–	◊P2979	Cream
◊P2940	◊P2955	Green	–	◊P2992	Tangerine

◊ Special order only; contact Switchcraft for price and delivery.

LEGENDS

Engraved letters and numbers are available on special order. A-Z, ON and OFF in Condensed Block typeface are available. Other custom legends may be supplied (please inquire). Refer to drawing and chart for legend data.

Character Height inches (mm)	Horizontal Mount (Char. Max.)	
	I	II
1/8" (3.175)	3	4
3/32" (2.381)	4	5
5/64" (1.984)	4	5

HORIZONTAL MOUNT

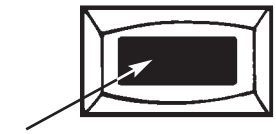

Character Height inches [mm]	Vertical Mount (Char. Max.)	
	I	II
1/8" (3.175)	1	1
3/32" (2.381)	2	2
5/64" (1.984)	2	3

VERTICAL MOUNT

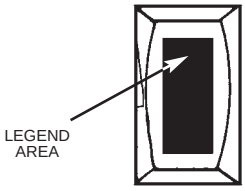

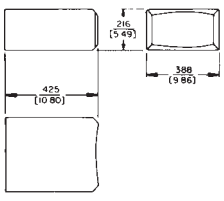

TYPE I PUSHBUTTON

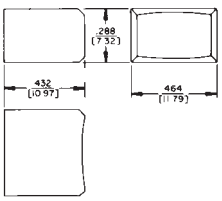

TYPE II PUSHBUTTON

DIMENSIONS ARE FOR REFERENCE ONLY Inch (mm)

® Registered trademark of Switchcraft, Inc.
Note: Contact your Switchcraft Representative for price and delivery

* Please visit the product pages on our website for the most up-to-date product information

UNISWITCH® SWITCHES

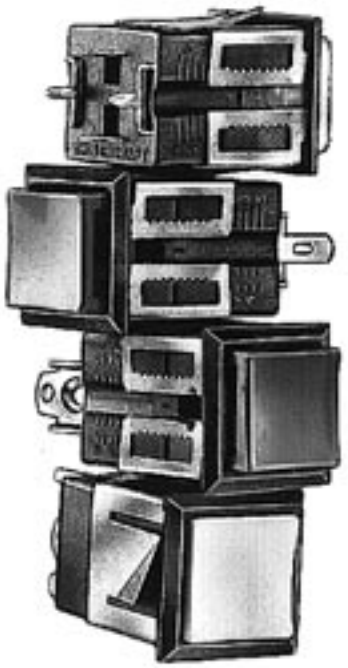

SERIES US - Non-illuminated,
SERIES LUS - Illuminated

Cost-effective Uniswitch switches are lighted or non-lighted momentary switches featuring snap-in mounting in a single hole and a choice of solder/screw (#5-40), solder/quick-connect (AMP FASTON® 110) 60967-1, or stand-off PC terminals. Molded housing protects internal parts, and bezel functions as built-in escutcheon. Series LUS accepts T 1-3/4 bi-pin lamps. (Lamps not included.)

®FASTON is a registered trademark of AMP INC.

MOUNTING

"Snap-in" mounting is in .617" (15.67 mm) minimum square hole - for row or matrix mounting. Panel thickness: .047" (1.19 mm) to .266" (6.76 mm) maximum. To mount, simply press switch into panel; "Adjusto-Clip" locking tabs engage panel and hold switch securely. Behind panel distance is 1.312" (33.32 mm) minimum.

SPECIFICATIONS

Switch Housing: Molded plastic, charcoal gray only.
"Adjusto-Clip": Copper alloy.
Contactor: Copper alloy plated. Form 1-A rated: 250 mA, 30 W maximum, AC, non-inductive load.
Terminals: Copper alloy, silver-plated.
Pushbuttons: Molded plastic in 8 colors.
Operating Force: 12 - 16 ounce (340-454 grams).

SPECIAL ORDER FEATURES

- Other contactor platings.
- Engraved legends (See page 270).
- Other pushbutton colors.
- "Adjusto-Clips" set to positions 2, 3, 4, or 5.

"ADJUSTO-CLIP" MOUNTING

Position Number	Panel Thickness Inch (mm)		Position Number	Panel Thickness Inch (mm)	
	Min.	Max.		Min.	Max.
1*	.047 (1.2)	.078 (2.0)	4	.188 (4.8)	.219 (5.6)
2	.094 (2.4)	.125 (3.2)	5	.234 (6.0)	.266 (6.8)
3	.141 (3.6)	.172 (4.4)			

* "Adjusto-Clips" normally installed in this position unless otherwise specified.

PART NUMBERS (Order switches and pushbuttons separately)

Terminal Type/Part Number; Series US			Terminal Type/Part Number; Series LUS[1]		
Solder/ Screw	Printed Circuit	Solder/ Quick-Connect	Solder/ Screw	Printed Circuit	Solder/ Quick-Connect
US001	US001PC	US001ST	LUS001	LUS001PC	LUS001ST

1. Lamp not included.
◊ Special order only; contact Switchcraft for price and delivery.

PUSHBUTTONS* (Pushbuttons ordered separately from switches.)

Part Number	Color	Part Number	Color
P23491	Red	P23495	White
P23492	Black	P23497	Orange
P23493	Green	P23498	Yellow
P23494	Blue	◊P234913	Amber

* Extra replacement pushbuttons can be ordered separately.

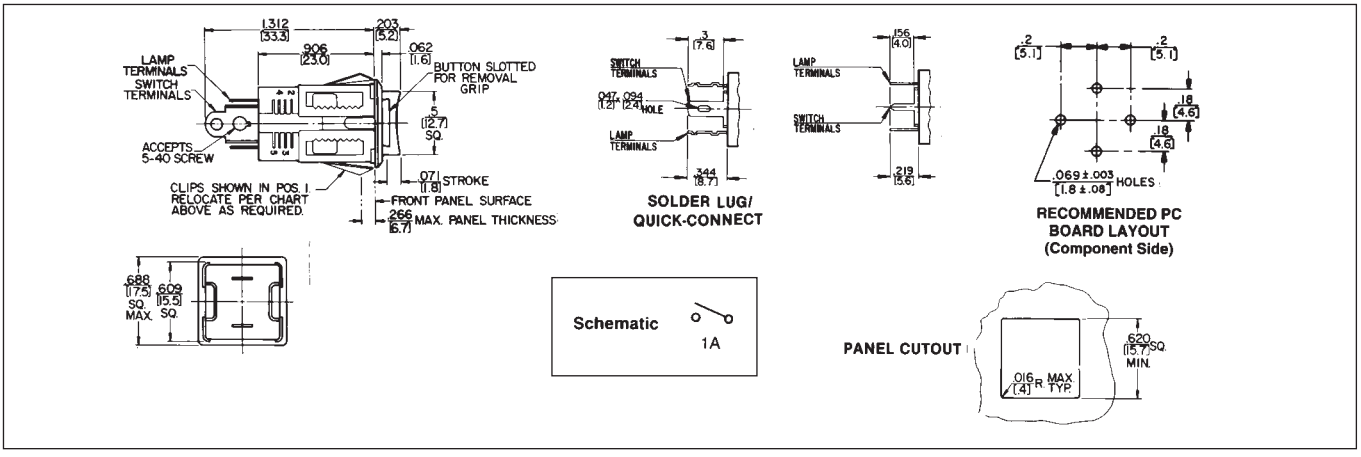

DIMENSIONS ARE FOR REFERENCE ONLY Inch (mm)

* Please visit the product pages on our website for the most up-to-date product information

BOX SWITCH® SWITCHES

BXR013PC



SHOWN ACTUAL SIZE



Rear view, BXR056
Solder Lug/Quick-Connect Terminals.



Rear view, BXR013PC
PC Terminals.

SERIES BXR

Economical momentary, non-illuminated switches feature "Adjusto-Clip" snap-lock mounting and selection of switching. Bezel trims mounting and enclosed construction protects against dust, dirt, and physical damage. Color pushbuttons have concave face for positive "feel".

MOUNTING

Front mount in .620" (15.75 mm) minimum square hole. Solder lug/quick-connect terminals accept AMP FASTON® 110 terminals; PC terminals fit boards up to .281" (7.14 mm) thick. "Adjusto-Clip" permits mounting in panels from .047 " (1.19 mm) to .281" (7.14 mm) thick.

®FASTON is a registered trademark of AMP INC.

SPECIFICATIONS

Housing: Molded plastic, charcoal gray only.
Pushbutton: Molded plastic; red, black, green, and white standard.
"Adjusto-Clip" Mounting Frame: Copper alloy, plated.
Contact Springs: Copper alloy, plated.
Contacts: Integral, copper alloy, plated.
1-A, 1-C, 2-C, or 2-A + 2-C
Switching: 250 mA, 30 W max., AC, non-inductive load.
Terminals: Copper alloy, silver-plated.

SPECIAL ORDER FEATURES

- Other contact platings.
- Engraved legends (see page 270).
- Other pushbutton colors.
- "Adjusto-Clips" set to positions 2, 3, 4, or 5.

PART NUMBERS

Pushbutton Color/Part Number				Circuits
Red	Black	Green	White	
Solder Lug/Quick-Connect Terminals				
BXR011 BXR013 BXR016 BXR0110	BXR021 BXR023 BXR026 ◊BXR0210	◊BXR031 BXR033 BXR036 ◊BXR0310	BXR051 BXR053 BXR056 ◊BXR0510	1-A 1-C 2-C 2-A + 2-C
PC Terminals				
◊BXR011PC ◊BXR013P BXR016PC ◊BXR0110PC	◊BXR021PC ◊BXR023P BXR026PC ◊BXR0210PC	◊BXR031PC ◊BXR033PC ◊BXR036PC ◊BXR0310PC	◊BXR051PC ◊BXR053PC ◊BXR056PC BXR0510PC	1-A 1-C 2-C 2-A + 2-C

◊ Special order only; contact factory for price and delivery.

"ADJUSTO-CLIP" MOUNTING POSITIONS

Position Number	Panel Thickness Inch (mm)	
	Minimum	Maximum
1*	.047 (1.2)	.094 (2.4)
2	.094 (2.4)	.141 (3.6)
3	.141 (3.6)	.188 (4.8)
4	.188 (4.8)	.234 (6.0)
5	.234 (6.0)	.281 (7.1)

* "Adjusto-Clips" normally installed in this position unless otherwise specified.

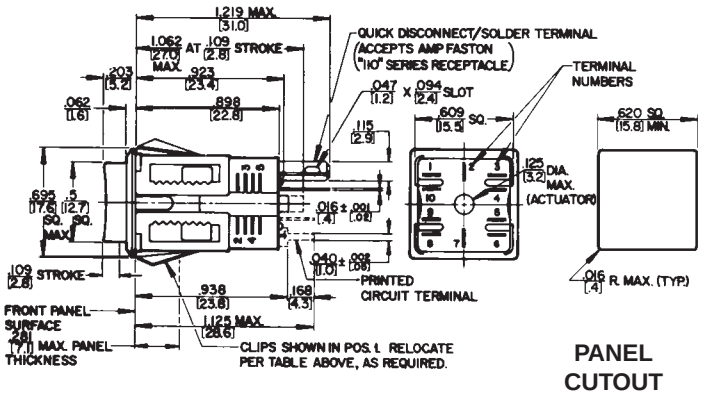

PANEL CUTOUT

SCHEMATIC

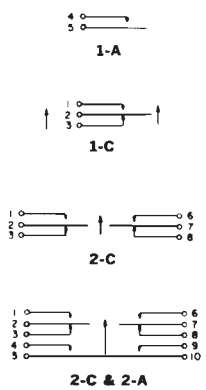

RECOMMENDED PC BOARD LAYOUT

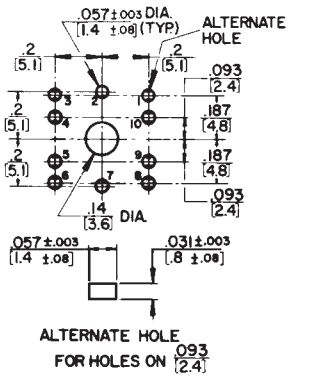

DIMENSIONS ARE FOR REFERENCE ONLY Inch (mm)

® Registered trademark of Switchcraft, Inc.
Note: Contact your Switchcraft Representative for price and delivery

* Please visit the product pages on our website for the most up-to-date product information

BUTTON-SWITCH® SWITCHES



SERIES 903, 913, 923, 933

These small momentary switches are completely enclosed in rugged metal housing. Front or rear-panel mount types offer 1-A, 1-B, 1-C, or 1-D switching. Red or black pushbuttons and solder terminals are standard. Series 903 and 913 are front mount in .469" (11.91 mm) diameter hole in panels up to .297" (7.54 mm) thick. Series 923 and 933 are rear mount in .250" (6.35 mm) diameter hole in panels up to .156" (3.96 mm) thick. Mounting hardware is supplied.

SPECIFICATIONS

Body: Copper alloy, plated.
Pushbutton: Molded red or black plastic, integral with shaft.
Insulation: Rigid plastic.
Springs: Integral contacts, plated.
Ratings: 250 mA, 30 W maximum, AC, non-inductive load.
Solder Terminals: Copper alloy, silver-plated.
Locknuts: Copper alloy, plated.
Series 903, 913: P-1053-1.
Series 923, 933: P-1150-1.
Lockwasher: Series 903, 913: Steel, P-1060-3
Flat Washer: Series 923, 933: Steel, plated, S-1790-1

SPECIAL ORDER FEATURES

• Other pushbutton colors. • Legends.

PART NUMBERS

Panel Mounting	Pushbutton Color/Part Number		Circuit	Schematic[1]
	Red	Black		
Front	903	913	1-C	
	◊903D	◊913D	1-D	
Rear	923	933	1-C	
	◊923D	◊933D	1-D	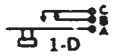

1. Circuits C or 1-D can be wired for either 1-A or 1-B switching
◊ Special order only; contact Switchcraft for price and delivery.

TINI-SWITCH® SWITCHES



SERIES 950, 960

Momentary Tini-Switch® switches are miniaturized versions of Littel-Switch® switches (see page 274 for construction details). .25 A contacts are intended for low-power switching where contact resistance is not critical. Red or black pushbuttons, solder lug terminals and choice of 1-A, 1-B and 1-C switching is standard.

MOUNTING

Switches mount from rear in .250" (6.35 mm) diameter hole in panels up to .094" (2.39 mm) thick. Mounting washers and locknuts are supplied.

SPECIFICATIONS

Bushing: Copper alloy, plated.
Pushbutton: Molded plastic, integral with shaft.
Insulation: Rigid plastic.
Springs: Copper alloy.
Contacts: Integral contacts are standard. .25 A, 30 W maximum, AC, non-inductive load.
Washer: Steel, plated, S17901.
Locknut: Copper alloy, plated, P11501.

SPECIAL ORDER FEATURES

• Other pushbutton colors. • Legends.

PART NUMBERS

Pushbutton Color/Part Number		Circuit	Schematic
Red	Black		
951	961	1-A, SPST, (N.O.)	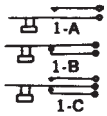
◊952	◊962	1-B, SPST, (N.C.)	
953	963	1-C, SPDT	

◊ Special order only; contact Switchcraft for price and delivery.

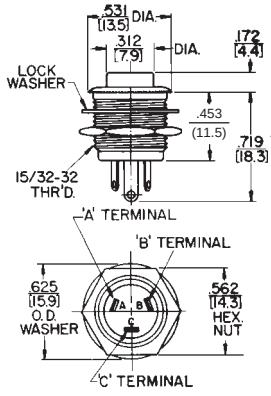

Series 903 & 913

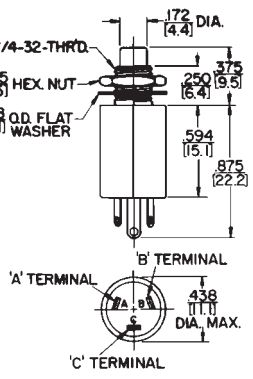

Series 923 & 933

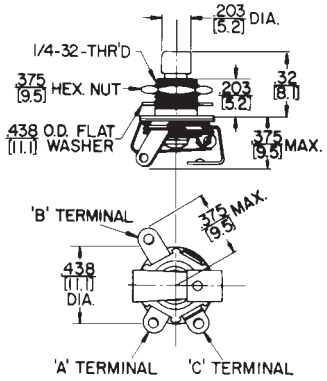

Series 950 & 960

DIMENSIONS ARE FOR REFERENCE ONLY Inch (mm)

* Please visit the product pages on our website for the most up-to-date product information

LITTEL-SWITCH® SWITCHES



101 102 103

PART NUMBERS

Pushbutton Color/Part Number		Circuit	Schematic
Red	Black		
101	201	1-A, SPST, (N.O.)	
◊101S	◊201S		
◊102	202	1-B, SPST, (N.C.)	
◊102S	◊202S		
103	203	1-C, SPDT	
◊103S	◊203S		

◊ Special order only; contact Switchcraft for price and delivery.
"S" at the end of part number indicates 3H rated fine silver contacts.

SERIES 100, 100S, 200, 200S

Momentary switches feature leaf springs, insulating spacers, notched insulating washers and plated copper alloy bushing assembled into a rugged, reliable, long-life switch for limited space applications. Series 100 and 200 have integral .25 A contacts intended for low power switching where contact resistance is not critical. Series 100S and 200S have 3 A fine silver contact. Red and black pushbuttons, solder lug terminals and choice of 1-A, 1-B or 1-C switching are standard. Shaft and pushbutton molded as one piece. Captive shaft extends through bushing, actuated leaf springs. Notched phenolic washers insulate springs and interlock all members, eliminating possibility of springs shifting. All springs are insulated from bushing.

MOUNTING

Switches mount from rear in panels up to .250" (6.35 mm) thick in .375" (9.52 mm) diameter holes. Locknuts and washers are supplied.

LEGENDS

Switchcraft offers a wide variety of engraved legends on special order. Contact Switchcraft for details.

SPECIFICATIONS

Bushing: Copper alloy, plated.
Pushbutton: Molded plastic, integral with shaft.
Insulation: Rigid plastic.
Springs: Copper alloy.
Contacts: Integral contacts are standard. (Series 100, 200) .250 A, 30 W maximum, AC, non-inductive load. Riveted silver contacts (Series 100S, 200S); 3A, 300 W maximum AC, non-inductive load.
Washer: Steel, plated, S10221.
Locknut: Copper alloy, plated, P10001.

SPECIAL ORDER FEATURES

- Other pushbutton colors.
- Legends.
- Welded crossbar palladium contacts for dry circuit.

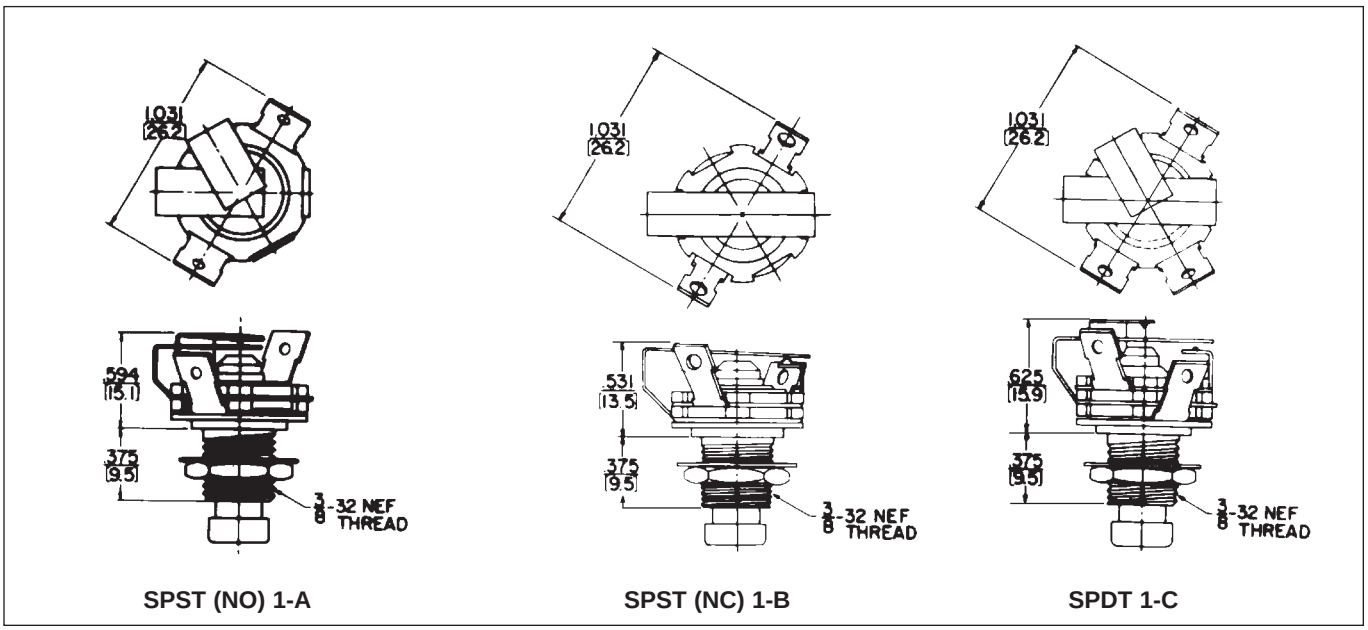

SPST (NO) 1-A SPST (NC) 1-B SPDT 1-C

DIMENSIONS ARE FOR REFERENCE ONLY Inch (mm)

® Registered trademark of Switchcraft, Inc.
Note: Contact your Switchcraft Representative for price and delivery

* Please visit the product pages on our website for the most up-to-date product information

HI-D SWITCH® PC MOUNT SWITCHES

SERIES H-100, H-100PC, H-200, H-200PC

Compact, momentary switches mount on .625" (15.87 mm) centers in rows or matrix arrays and are the same height and panel size as Switchcraft's Hi-D Jack. Rugged "box" body protects contact springs against mechanical damage and keys them in precise alignment. Precision springs produce high contact pressure, smoother wear-reducing actuation, and positive "make-break". Recommended where contact resistance is not critical.

MOUNTING

Rear of panel mount in .375" (15.87 mm) diameter hole in panels up to .156" (3.96 mm) thick. Behind panel space: 1.094" (27.79 mm) minimum. Mounting hardware supplied. Switches with PC terminals mount directly to PC boards, and may also be panel mounted with threaded bushing.

SPECIFICATIONS

Switch Housing: Molded plastic.
Mounting Bushing: Copper alloy, plated.
Pushbutton/Actuator: Thermoplastic, red or black with concave face.
Contact Springs: Copper alloy, silver or gold-plated.
Contacts: Integral, 1-A, 1-B, 1-C, or 1-D, 0. 25 A, 30 W maximum, non-inductive load.
Contactor: Copper alloy, plated.
Locknut: Copper alloy, plated. P10001 (supplied).
Washer: Steel, nickel-plated. S10221 (supplied).

SPECIAL ORDER FEATURES

- Other pushbutton colors.
- Legends (see page 270).





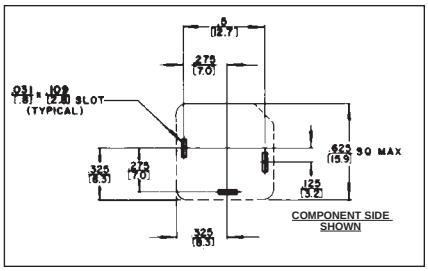

SERIES H100, H200

PART NUMBERS

Solder Lug Terminals		PC Terminals		Circuit	Schematic
Pushbutton Color/Part Number		Pushbutton Color/Part Number			
Red	Black	Red	Black		
H101	H201	◊H101PC	◊H201PC	1-A	See Below
◊H102	◊H202	◊H102PC	◊H202PC	1-B	
H103	H203	H103PC	H203PC	1-C	
◊H103D	◊H203D	-	-	1-D	

◊ Special order only; contact factory for price and delivery.

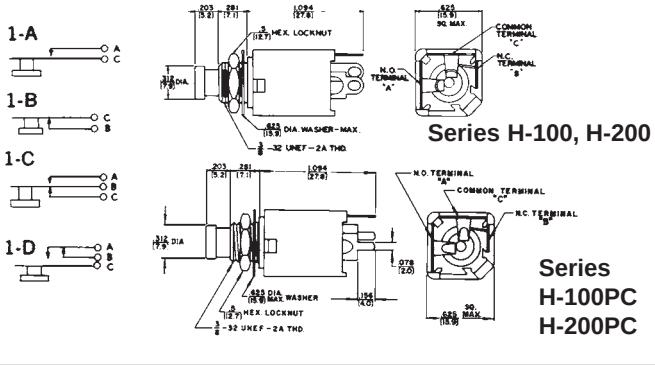

PART NUMBERS

Series DA	Button Color	Circuit	Schematic
◊DA013	Red	A-B	A-B contacts may be externally wired to provide a 1-C circuit as illustrated below.
◊DA023	Black	A-B	
◊DA033	Green	A-B	
◊DA043	Blue	A-B	
◊DA053	White	A-B	
◊DA083	Yellow	A-B	

◊ Special order only; contact Switchcraft for price and delivery.

DA-SWITCH SWITCHES

SERIES DA

Enclosed momentary pushbutton switch. Designed to meet switching requirements of computers, data processors, ground support systems, machine and process controls, test equipment and intercoms. Anodized aluminum body protects switch contacts from dirt, dust and bending during mounting. Terminals accept AMP Series 53 taper pins. Mount in .375" (9.5 mm) hole on .531" (13.5mm) centers. Behind panel depth .938" (23.8mm) minimum.

SPECIFICATIONS

Housing: Aluminum, black anodized.
Button: Thermoplastic, black.
Terminal Base: Thermoset black phenolic.
Terminals: Copper alloy, gold-plated.
Contacts: Integral. 500 mA, 5 W maximum, non-inductive load.
Contactor: Copper alloy, plated.
Hardware: Supplied with one, ◊P1970 aluminum, black anodized knurled mounting nut, and one, P1971 parkerized lockwasher.

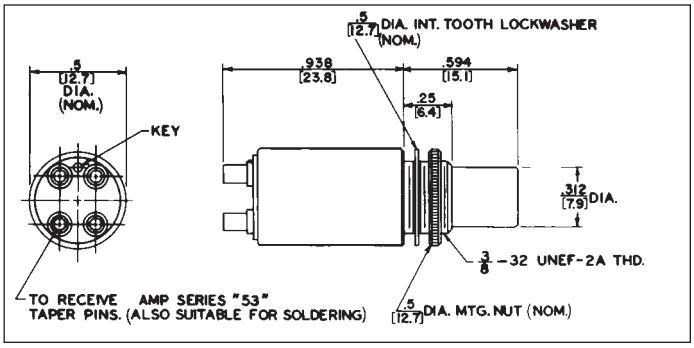

DIMENSIONS ARE FOR REFERENCE ONLY Inch (mm)

* Please visit the product pages on our website for the most up-to-date product information

CORD-SWITCH® CORD SWITCHES

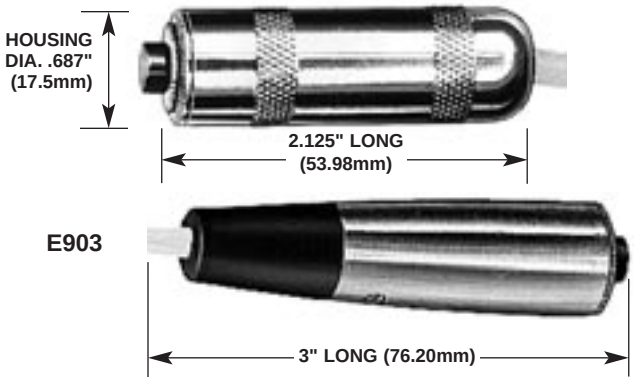

SERIES E900, ED900, EP900

Momentary cord (pendant) switches can be specified with red or black pushbuttons, 1-C or 1-D switching, solder terminals and metal handle (Series E900), plastic handle (Series EP900), or metal handle with clamp and strain relief (Series ED900).

SPECIFICATIONS

(See page 273 for switch specs.)

SERIES E900, EP900:

Housing: Series E900 - Copper alloy, plated.
Series EP900 - Molded black plastic.
Switch Bushing: Copper alloy, plated.
Insulation: Rigid plastic.

SERIES ED900:

Housing: Die-cast zinc, plated.
Switch Body and Insert Bushing: Copper alloy, plated.
Insulation: Rigid plastic.
Cable Relief Bushing: Black thermoplastic rubber.
Pressure Plates: Stainless steel.
Cable Relief Screws: Steel, plated.

SPECIAL ORDER FEATURES

• Other pushbutton colors. • Custom legends

PART NUMBERS (examples)

Pushbutton Color/Part Number		Maximum Cable Outside Diameter	Circuit
Red	Black		
E903	E913	.375" [9.5 mm]	1-C
ED903	ED913	.375" [9.5 mm]	
EP903	EP913	.250" [6.4 mm]	
◊E903D	◊E913D	.375" [9.5 mm]	1-D
◊ED903D	◊ED913D	.375" [9.5 mm]	
◊EP903D	◊EP913D	.250" [6.4 mm]	

◊ Special order only; contact Switchcraft for price and delivery.

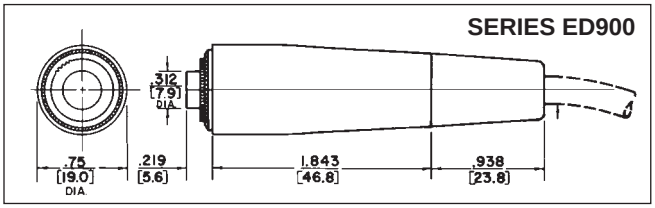

CORDETTE® CORD SWITCHES



SERIES 921

Momentary, 0.5 A switching combined with 1-piece molded plastic body qualifies Cordette for all types of commercial and industrial usage. The 921 has a phono jack receptacle and a phono jack in handle to fit standard phono plugs. The 921K is molded with 6' (1.8 meter), 2-conductor cable (internal cable clamp).

SPECIFICATIONS

Body: 921 and 921K - Molded gray plastic with contrasting trim and gray pushbutton.
Switch Contacts: Integral copper alloy, plated, form 1-A, 0.5 A, 50 W maximum, AC, non-inductive load. Not recommended for high voltage circuits.
Insulation: Thermoplastic UL 94V-0.
Phono Jack Terminations: (921): Standard phono jack, similar to 3501FP (see Jacks and Plugs Section).

SPECIAL ORDER FEATURES

- 1-B, 1-C, or 1-A + 1-B switching.
- Red, green, blue, white or yellow pushbuttons.
- Legends (see page 270).
- Other body colors.
- ST-900 - Custom-molded to any of a large selection of cables (See Molded Cable Assembly Section). Also many cable terminations, i.e., phone plugs, extension jacks, phono plugs, spade lugs, alligator clips, stripped and tinned leads, etc.

PART NUMBERS

Part Number	Description
921	Cordette switch, phono jack termination.
921K	Same as 921, except with 6' (1.8 meter), 2-conductor cable with stripped and tinned leads.

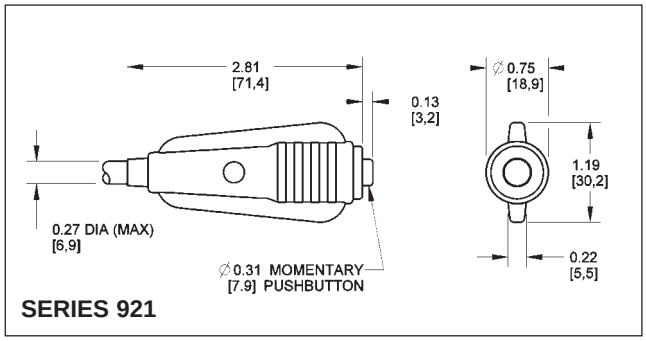

DIMENSIONS ARE FOR REFERENCE ONLY Inch (mm)

® Registered trademark of Switchcraft, Inc.
Note: Contact your Switchcraft Representative for price and delivery

* Please visit the product pages on our website for the most up-to-date product information

PUSH-LITE® SWITCHES AND INDICATORS

Completely enclosed, lighted pushbutton switches feature long-life, highly-reliable, leaf-springs. Available with or without barriers, full or split-face display. Mounts with clamp-type bracket; no screws, washers or nuts needed. Can be mounted in vertical or horizontal rows and in matrixes. Accepts standard T 1-3/4 flange-base lamp (lamp not furnished with switch) in either 6 V to 28 V rating. Specify 1 lamp for single lamp type or 2 lamps for twin-lamp type when redundant or split-face lighting is required. Barriers and colored filter snap-inserts optional (order separately). Mounting hole (w/o barriers): 1" (25.4 mm) x .875" (22.23 mm); (w/barriers) 1.188" (30.16 mm) x .875" (22.23 mm). Panel thickness: .125" (3.18 mm) maximum. Behind panel depth 1.75" (44.45 mm) (minus panel thickness).

MOMENTARY

SINGLE LAMP

Part Number	Housing/ Pushbutton Color	Switching	AC Ratings (max.) non-inductive	Contacts	CIrcuits	Terminals
PL103205	Black/White	SPDT	2 A, 125 V	Palladium	1-C	Solder Lug
PL106205		DPDT			2-C	
PL112205		4PDT			4-C	
◊**PL126205**		DPDT	8 A, 125V	Silver	2-C	
◊**PL403205**	Gray/White	SPDT	2 A, 125V	Palladium	1-C	
◊**PL406205**		DPDT			2-C	
◊**PL412205**		4PDT			4-C	
◊**PL706205**	Black/White	DPDT	2 A, 125 V		2-C	PC
◊**PL712205**		4PDT			4-C	

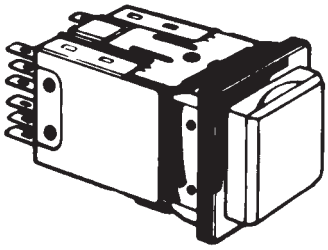

WITHOUT BARRIERS

TWIN LAMP

PL203205	Black/White	SPDT	2 A, 125 V	Palladium	1-C	Solder Lug
PL206205		DPDT			2-C	
PL212205		4PDT			4-C	
◊**PL226205**		DPDT	8 A, 125V	Silver	2-C	
◊**PL503205**	Gray/White	SPDT	2 A, 125V	Palladium	1-C	
◊**PL506205**		DPDT			2-C	
◊**PL512205**		4PDT			4-C	
◊**PL803205**	Black/White	SPDT	2 A, 125 V		1-C	PC
◊**PL806205**		DPDT			2-C	
◊**PL812205**		4PDT			4-C	

PUSH-LOCK/PUSH-RELEASE

SINGLE LAMP

Part Number	Housing/ Pushbutton Color	Switching	AC Ratings (max.) non-inductive	Contacts	Circuits	Terminals
PL103705	Black/White	SPDT	2 A, 125 V	Palladium	1-C	Solder Lug
PL106705		DPDT			2-C	
PL112705		4PDT			4-C	
◊**PL123705**		SPDT	8 A, 125V	Silver	1-C	
◊**PL126705**		DPDT			2-C	
◊**PL403705**	Gray/White	SPDT	2 A, 125V	Palladium	1-C	
◊**PL406705**		DPDT			2-C	
◊**PL412705**		4PDT			4-C	
◊**PL703705**	Black/White	SPDT	2 A, 125 V		1-C	PC
◊**PL706705**		DPDT			2-C	
◊**PL712705**		4PDT			4-C	

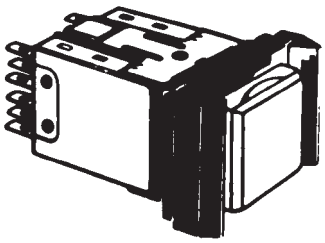

WITH BARRIERS

TWIN LAMP

◊**PL203705**	Black/White	SPDT	2 A, 125 V	Palladium	1-C	Solder Lug
PL206705		DPDT			2-C	
PL212705		4PDT			4-C	
◊**PL226705**		DPDT	8 A, 125V	Silver	2-C	
◊**PL506705**	Gray/White	DPDT	2 A, 125V	Palladium	2-C	
◊**PL512705**		4PDT			4-C	
◊**PL803705**	Black/White	SPDT	2 A, 125 V		1-C	PC
◊**PL806705**		DPDT			2-C	
◊**PL812705**		4PDT			4-C	

◊ Special order only; contact Switchcraft for price and delivery.

DIMENSIONS ARE FOR REFERENCE ONLY Inch (mm)

* Please visit the product pages on our website for the most up-to-date product information

PUSH-LITE® SWITCHES AND INDICATORS (continued)

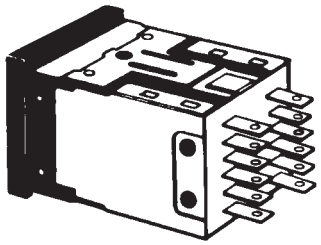

U.L. LISTED, MOMENTARY & PUSH-LOCK/PUSH-RELEASE

Part Number	Housing/ Pushbutton	Action[1]	Switching	AC Ratings (max.) non-inductive	Contacts	Circuit	Listing	Terminals
SINGLE LAMP								
◊26U1003	Black/White	M	SPDT	8 A, 125 V	Silver	1-C	UL	Solder Lug
◊26U1004		M	DPDT	8 A, 125V		2-C	UL	
◊26U1007		PL/PR	SPDT	8 A, 125V		1-C	UL	
◊26U1008		PL/PR	DPDT	8 A, 125 V		2-C	UL	
TWIN LAMP								
◊26U1005	Black/White	M	SPDT	8 A, 125 V	Silver	1-C	UL	Solder Lug
◊26U1006		M	DPDT	8 A, 125V		2-C	UL	
◊26U1009		PL/PR	SPDT	8 A, 125V		1-C	UL	
◊26U1010		PL/PR	DPDT	8 A, 125 V		2-C	UL	

◊ Special order only; contact Switchcraft for price and delivery. **NOTE: 1** M = Momentary; PL/PR = Push-Lock/Push-Release

SERIES PL9000 - PL® INDICATORS

Create unlimited combinations of rows and/or matrix arrays with or without Push-Lite switches. A perfect match for front panel appearance Push-Lite switches - but functions only as a lighted indicator. Mounts same as Push-Lite switches: behind panel depth 1.341" (35.55mm) maximum uses same lamp, color filter, snap inserts, light divider and optional mounting barriers as Push-Lite® switches.

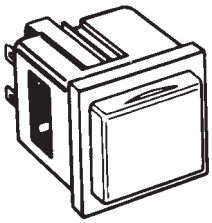

Part Number	Description
PL9105	Black housing; uses 1 or 2 lamps. White screen.
◊PL9205	Same as PL-9105 except gray housing.

PUSHBUTTON/INDICATOR SCREENS

Series PL500 Pushbuttons/Indicator Screens are available separately for use with Push-Lite switches or PL Indicators for in-the-field substitution and/or replacement.

Part Number	Color	Part Number	Color
PL501	Red	**PL508**	Yellow
PL503	Green	**PL512**	Clear
PL504	Blue	**PL513**	Amber
PL505	White		

COLOR FILTER SNAP-INSERTS

Translucent plastic filters for special color coding in Push-Lite switch and PL Indicators. Use with white or clear pushbuttons.

SERIES PL300 - Full Display Color Filters	
Part Number	**Color**
PL303	Green
PL305	White
PL308	Yellow

OPTIONAL MOUNTING BARRIERS

Molded plastic barriers separate Push-Lite switches, PL Indicators, or combinations of Push-Lite switches and PL Indicators and prevent accidental operation of adjacent switches. Series PL100: end barrier. Series PL200: center barrier. Two required between adjacently mounted switches. Push-Lite switch is shown with two PL102 end barriers installed.

Part Number	Description
PL102	End barrier, black
◊PL111	End barrier, gray
PL202	Center barrier, black
◊PL211	Center barrier, gray

◊ Special order only; contact Switchcraft for price and delivery.

LIGHT DIVIDER

Light divider for Push-Lite switch pushbuttons and PL Indicator screens; separates lighting from twin lamps. Order light divider for each switch or indicator specified where split-face lighting is desired. **Order PL551.**

BASIC SCHEMATIC

Switch circuitry can be described as combinations of basic schematic circuits as shown below. N.O. means normally open; N.C. means normally closed.

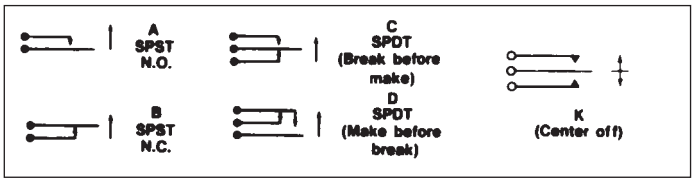

The above are strictly electrical schematics and do not necessarily indicate relative solder lug positions.

DIMENSIONS ARE FOR REFERENCE ONLY Inch (mm)

® Registered trademark of Switchcraft, Inc.

Note: Contact your Switchcraft Representative for price and delivery

* Please visit the product pages on our website for the most up-to-date product information

PUSH-LITE® SWITCHES - PART NUMBERING SYSTEM

P L				
SERIES	**LAMP & SWITCH HOUSING COLOR**	**CIRCUITRY**	**ACTION**	**PUSHBUTTON COLOR**
PL	1 - Single lamp, Black housing	03 - 1C	2 - Momentary	01 - Red
	2 - Twin lamp, Black housing	06 - 2C	7 - Push-Lock/ Push-Release	03 - Green
	3 - Non-illuminated, Black housing	09 - 3C	9 - Momentary Silent*	04 - Blue
	4 - Single lamp, Gray housing	12 - 4C		05 - White
	5 - Twin lamp, Gray housing	23 - 1C (8A)		08 - Yellow
	6 - Non-illuminated, Gray housing	26 - 2C (8A)		12 - Clear
	7 - Single lamp, Black housing (PC terminals)	29 - 3C (8A)		13 - Amber
	8 - Twin lamp, Black housing (PC terminals)	32 - 4C (8A)		

* Special order only. Contact Switchcraft.

OPTIONS

Pushbutton/indicator screens, color filter snap-inserts, mounting barriers and lighted dividers can be specified separately for substitution/replacement; order from tables. Also, engraving of legends is available; contact Switchcraft.

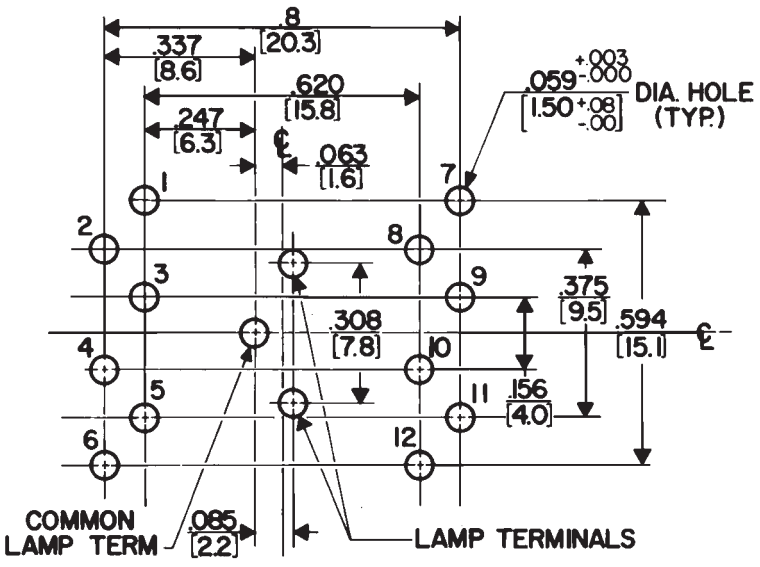

RECOMMENDED PC BOARD LAYOUT
(Component Side)

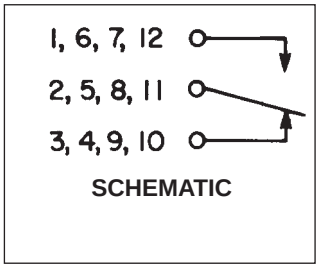

SCHEMATIC

DIMENSIONS ARE FOR REFERENCE ONLY Inch (mm)

* Please visit the product pages on our website for the most up-to-date product information

PUSH-LITE® SWITCHES AND INDICATORS (continued)

OUTLINE DIMENSIONS

PUSH-LITE SWITCHES WITH SOLDER LUGS

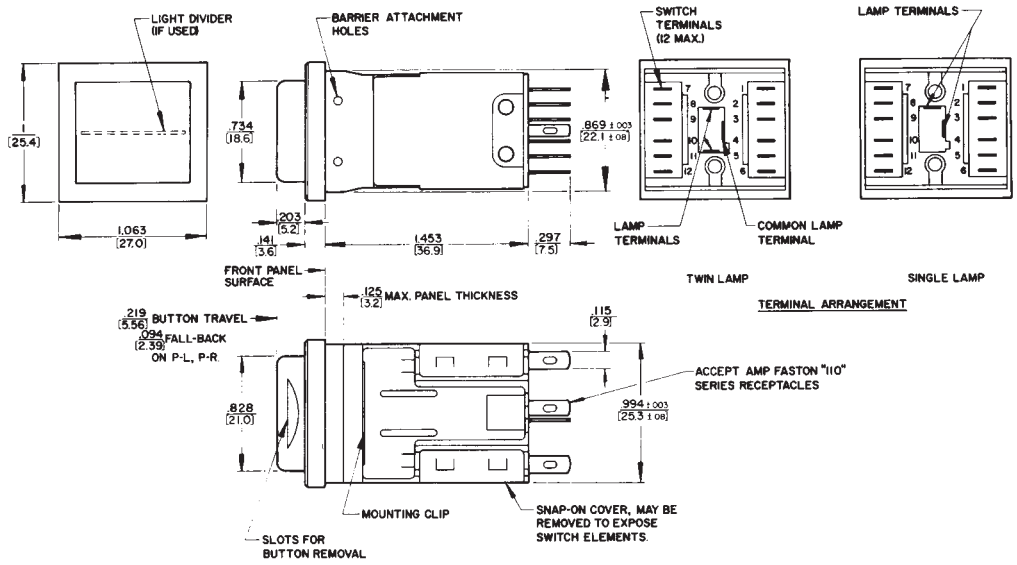

PUSH-LITE SWITCHES WITH PC TERMINALS

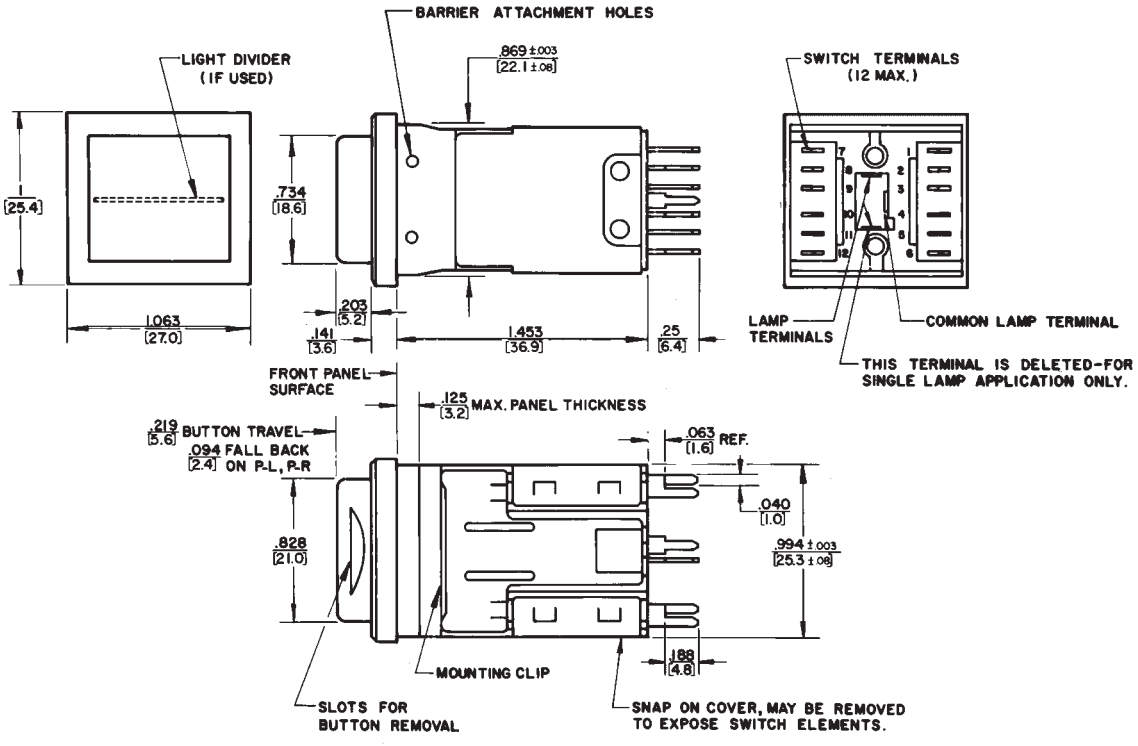

DIMENSIONS ARE FOR REFERENCE ONLY Inch (mm)

® Registered trademark of Switchcraft, Inc.
Note: Contact your Switchcraft Representative for price and delivery

* Please visit the product pages on our website for the most up-to-date product information

PUSH-LITE® SWITCHES AND INDICATORS (continued)

OUTLINE DIMENSIONS

SWITCH AND INDICATOR MOUNTING WITH BARRIERS (See Note)

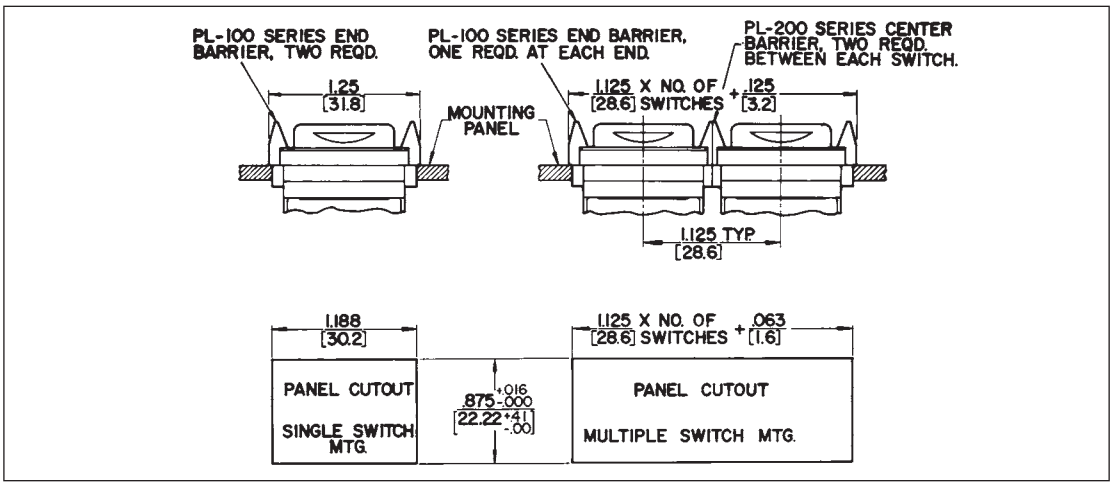

SWITCH AND INDICATOR MOUNTING WITH BARRIERS (SEE NOTE)

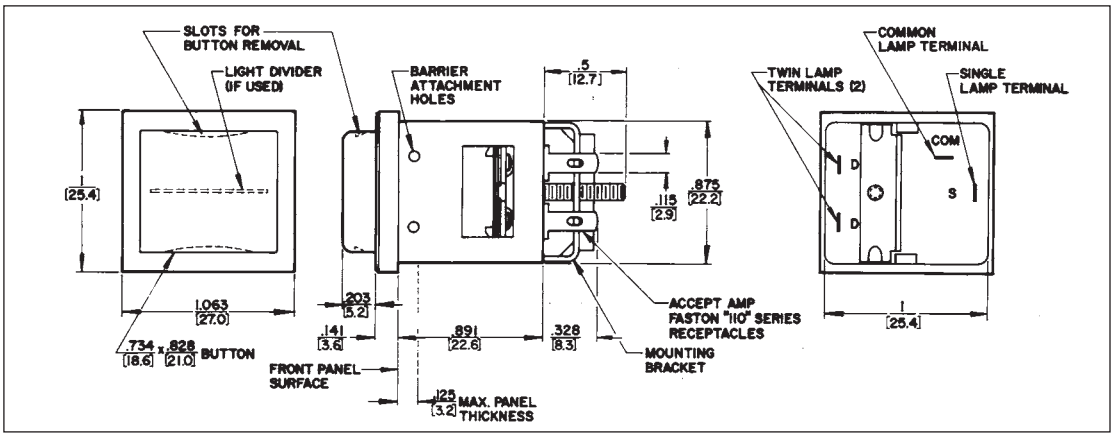

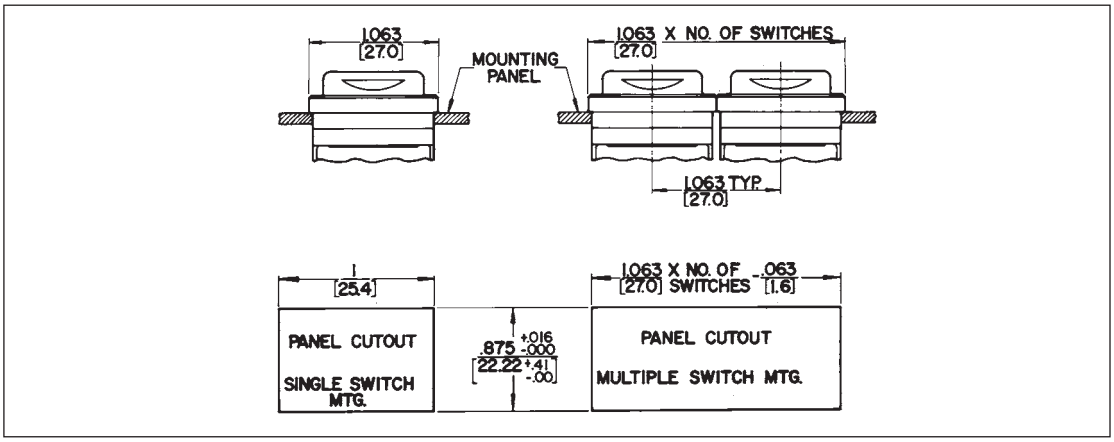

NOTE: PANEL OPENINGS FORM MULTIPLE ROW SWITCH MOUNTING

Leave .109" (2.77 mm) minimum width strip between panel-cutouts to assure secure mechanical mounting of adjacent clamp mounting brackets.

DIMENSIONS ARE FOR REFERENCE ONLY Inch (mm)

* Please visit the product pages on our website for the most up-to-date product information

SLIDE SWITCHES

DESIGN FEATURES

Switchcraft slide switches are completely field tested and proven in electrical/electronic equipment applications. They are among the highest-quality, lowest-cost slide switches available to "cost-to-quality ratio" conscious engineers.

Precision slide switches are designed and constructed to meet or exceed industry standards for reliability, electrical capacity and life characteristics.

Switchcraft's slide action switches are ideal for use in critical military and industrial applications such as: instrumentation, test and ground support equipment, computers, control devices. Their attractive styling will enhance the appearance of modern home entertainment equipment.

UL AND CSA SWITCHES

All slide switches in this catalog with part number suffix "E" are stamped with both UL and CSA marks. Other standard switches are UL recognized (except as noted) and are stamped with the ® mark.

TERMINALS

Silver-plated terminals are standard; gold-plated terminals are available on special order. Printed circuit terminals in varying lengths from ("A" dimension) .078" (1.98 mm) to 1.25" (31.75 mm) are available on special order. Reference "A" on all switch drawings indicates length of PC terminals. See illustration and notes below for selection of terminals.

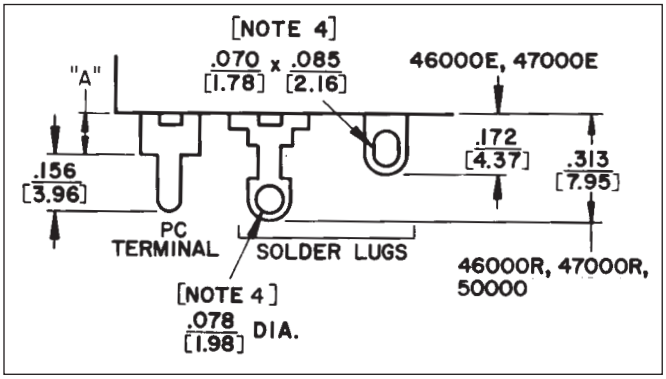

SPECIAL ORDER SWITCHES FOR CSA APPLICATIONS

The following series of switches (solder lug type) must be assembled with a fishpaper or phenolic solder guard to be CSA certified and stamped. Available on special order only.

Series 46000R, 47000R, 46313R, 49000L, 50000L, Solder guards are not required on these switch series with PC terminals. However, they can only be supplied with CSA stamp on special order. Solder guards are not required on UL only versions. Contact Switchcraft for details.

SWITCH SERIES IDENTIFICATION

Series	Name	Number of Positions
46000	General Purpose Slide Switches	2, 3
47000	Tandem Slide Switches	2; 2 gang
49000	General Purpose Slide Switches	3
50000	General Purpose Slide Switches	2
56200, C56200	"Tini-Slide" Slide Switches	2
56300, C56300	"Tini-Slide" Slide Switches	3
C63000	Miniature Slide Switches	4
EPS1, EPS2 EPS3, EPS4	European Line Voltage Selector Switches	2

Series	Description
46000E	Note 1
46000R	Notes 1, 3
47000E	Note 1
47000R	Notes 1, 3
49000	Note 1
50000	Notes 1, 3
56000, C56000	See page 288
62000, C62000	See page 290
C63000	See page 290
EPS1, EPS2 EPS3, EPS4	See page 291

NOTES:

1. PC terminal "A" dimension is:
   Standard - .078" (1.98)
   Special - .109" (2.77), .141" (3.58), .160" (4.06), .180" (4.57), .203" (5.16), .234" (5.94), .266" (6.76), .313" (7.95), .391" (9.93), .400" (10.16), .438" (11.12), .484" (12.29), .609" (15.47), .688" (17.48), .719" (18.26), .813" (20.65), .969" (24.61), 1.25" (31.75)
2. .078" (1.98) "A" dimension is not recommended for momentary switches unless clearance hole for return spring is provided in PC board.
3. Accepts up to #14 AWG wire.

DIMENSIONS ARE FOR REFERENCE ONLY Inch (mm)

® Registered trademark of Switchcraft, Inc.

Note: Contact your Switchcraft Representative for price and delivery

* Please visit the product pages on our website for the most up-to-date product information

SLIDE SWITCHES (continued)

DESIGN FEATURES (continued)

SWITCHING

"Double-wipe" slide switches incorporate special "Sliders" to assure wiping action of terminals. This exclusive double wiping action reduces the possibility of oxidation or increased contact resistance. These longer lasting, self-cleaning sliders provide a switch with greater dependability.

The "Sliders", which are formed with precision dies, are U-shaped to give bifurcated contact reliability. "Sliders" are made from a special copper alloy, plated, which assures uniform tensile strength over the entire life of the switch.

Switch terminals are copper alloy, plated. Plating completely encloses the contact area in a silver jacket for positive and continuous electrical operation. A tarnish preventive lubricant coating is applied to the sliders and terminals.

NOTE: "double-wipe" action on all switches except Series 62000 and 46256LFR.

BASIC SCHEMATIC CHART

Standard arrangement is "Break" before "Make" (non-shorting). "Make" before "Break" (shorting) is available on special order in Series 46000R, 47000R, 49000 and 50000.

PART NUMBER SUFFIX LETTERS

Letter	Description
B	Special pushbutton type. Depressing (rather than sliding) pushbutton operates the switch.
C	Tandem switch with 2 knobs; knobs are internally (mechanically) coupled.
D	3-position switch having internal dust shield.
E	Molded terminal board.
F	Flush actuator. Screwdriver slotted. All series except 47000 series marked standard as "115/230." Other markings available as special order. Call Switchcraft for details.
L	Locking action.
M	Momentary (non-lock) action.
P	Switch has external plunger.
R	Current ratings up to 3A, 125V AC. Phenolic terminal board.
S	Shorting type contacts, make-before-break.
T	3-position switches only. One side of neutral has locking action; the other side has momentary action.

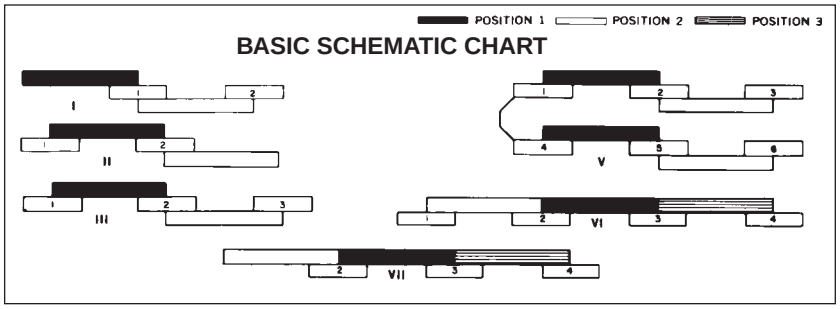

KNOBS KNOB HEIGHTS Inches (mm)

Series	Flush	.063 (1.6)	.087 (2.21)	.094 (2.39)	.100 (2.54)	.112 (2.84)	.125 (3.18)	.137 (3.48)	.15 (3.81)	.156 (3.96)	.187 (4.75)	.188 (4.78)	.200 (5.08)	.203 (5.16)	.219 (5.56)	.250 (6.35)	.302 (7.67)	.313 (7.95)	.315 (8)	.328 (8.33)	.344 (8.74)	.375 (9.52)	.406 (10.31)	.440 (11.18)	.453 (11.51)	.469 (11.91)	.487 (12.37)	.500 (12.7)	.531 (13.49)	.563 (14.3)	.594 (15.09)	.719 (18.26)	.750 (19.05)
46000E 46000R	* (1)			◊			◊					◊			◊	◊					*	◊	◊					◊	◊		◊	◊	◊
46300R	◊	◊		◊						◊		◊			◊			◊			*	◊				◊		◊		◊		◊	◊
47000	*(1)			◊			◊					◊			◊	◊					*(2)	◊	◊					◊	◊		◊		◊
49000	◊														◊						◊							*	◊				◊
50000	◊	◊										◊							◊							*					◊	
56200					◊		◊						*						◊	◊					◊		◊					
56300			◊			◊		◊	◊		*						◊		◊					◊			◊						
62000 (2)														*						◊												
C63000														*																		
EPS (3)	*																															

* Standard, ◊ Special order

1. Flush screwdriver actuator is standard on numbers 46206LFE, 46206LFR, 46256LFE, 46256LFR and 47227LFR.
2. Numbers 62206L and C62206L have side knob actuator (rather than top knob) standard.
3. EPS switches not available with raised knobs.

DIMENSIONS ARE FOR REFERENCE ONLY Inch (mm)

* Please visit the product pages on our website for the most up-to-date product information

GENERAL PURPOSE SLIDE SWITCHES

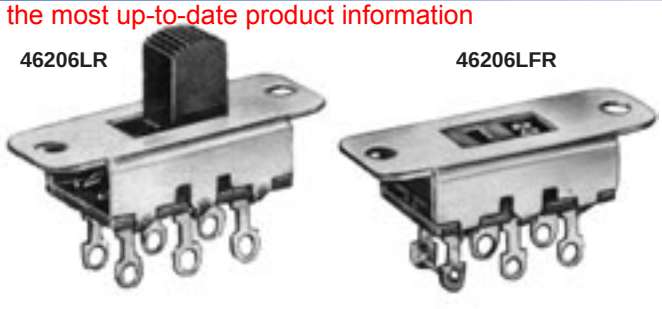

SERIES 46200E, 46200R - 2 POSITION

SPECIFICATIONS

Contact Ratings: 0.5A DC and 3A AC, 125V non-inductive. (Also 1.5A, 250V non-inductive for Series 46000E only). Numbers 46206LFR and 46256LFR are not designed to switch more than 125V, and must be set to desired position before power is applied to equipment, appliance, etc.
Listings: UL recognized and CSA certified. Series 46000R switches are CSA marked on special order only. Ref. UL card E40668 and CSA File 28260.
Housing: Steel, plated.
Knob: Black thermoplastic.
Terminals and Slider Contacts: Copper alloy, plated.
Insulation: Series 46000E: Thermoplastic.
Series 46000R: Rigid plastic.
Temperature Range: -4°F to +158°F (-20°C to +70°C).
Dielectric Strength: 1 k rms @ sea level.
Insulation Resistance: 1 k MΩ minimum.

SPECIAL ORDER FEATURES

1. .344" (8.74 mm) high knobs are standard; other heights available. See chart on page 283.
2. #6-32 and #4-40 tapped flanges for mounting available (except 46204MBR and 46206MP).
3. P.C. terminals.
4. Plunger length on 46206MP - Other lengths from .125" (3.18 mm) to 1.844" (46.84 mm) long.
5. Series 46000R switches are CSA marked on special order only. See page 282.

PART NUMBERS

Series 46200E	Series 46200R	Description	Schematic*
◊46201ME	46201MR	SPST NO, Momentary	I
◊46202LE	46202LR	SPST, Locking	II
◊46202ME	◊46202MR	SPST NC, Momentary	II
46203LE	46203LR	SPDT, Locking	III
◊46203LSE	◊46203LSR	SPDT, Locking	III Shorting
◊46203ME	46203MR	SPDT, Momentary	III
46204LE	◊46204LR	DPST, Locking	2-I
◊46204ME	◊46204MR	DPST NO, Momentary	2-I
46206LE	46206LR	DPDT, Locking	2-III
46206LFE	46206LFR	DPDT, Locking (1)	2-III
◊46206LSE	◊46206LSR	DPDT, Locking	2-III Shorting
◊46206ME	◊46206MR	DPDT, Momentary	2-III
-	◊46206MP	DPDT, Momentary*	2-III
46256LFE	46256LFR	DPDT, Locking (1) (2)	V
-	◊C46203LR**	SPDT , Locking	III
-	◊C46204MR**	DPST NO, Momentary	2-I
-	C46206LR**	DPDT, Locking	2-III
-	C46206LFR**	DPDT, Locking (1)	2-III

* Contacts are non-shorting, except as noted.
** "C" prefix specifies .078 inch (1.98) PC terminals, no mounting ears.
(1) Recommended for power selection, 115-230 legend, screwdriver slotted actuator minimizes tampering.
(2) Shorting bars installed.
◊ Special order only; contact Switchcraft

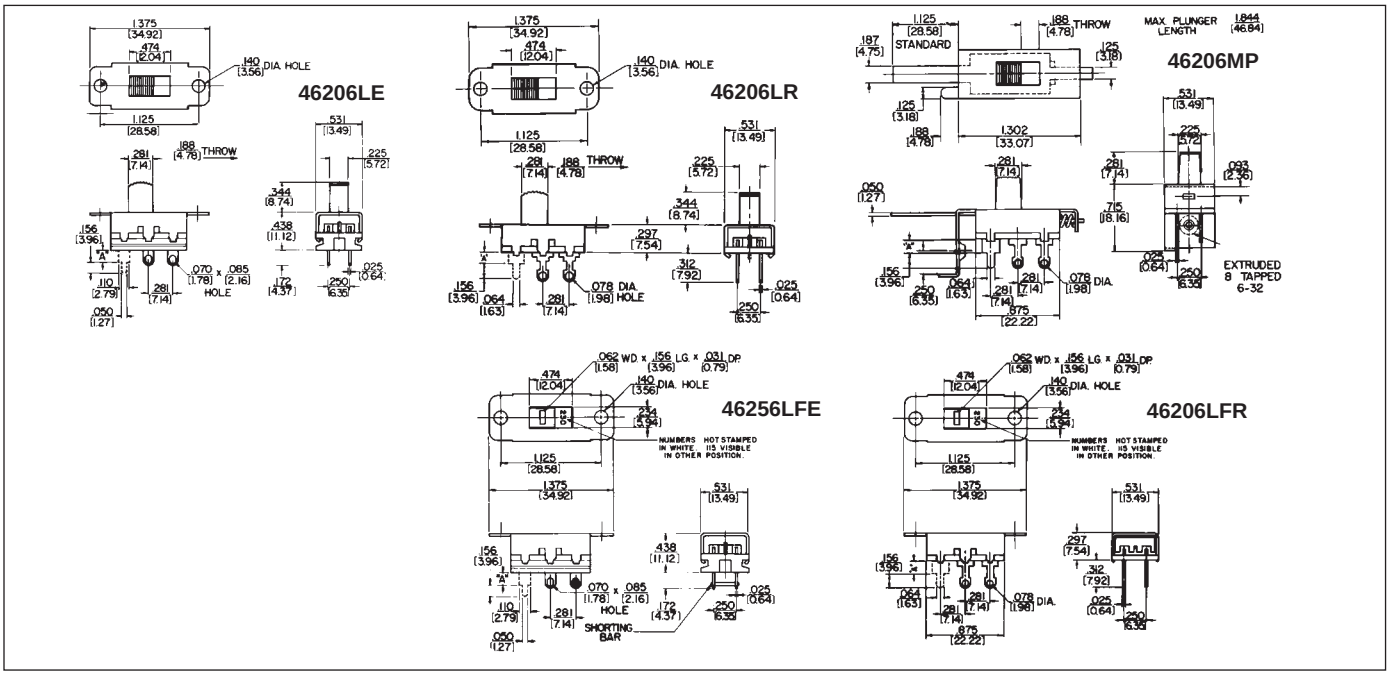

DIMENSIONS ARE FOR REFERENCE ONLY Inch (mm)

® Registered trademark of Switchcraft, Inc.
Note: Contact your Switchcraft Representative for price and delivery

* Please visit the product pages on our website for the most up-to-date product information

GENERAL PURPOSE SLIDE SWITCHES (continued)

SERIES 46300R - 3-POSITION

Three-position switches offer locking-locking, momentary-momentary and locking-momentary action for talk-listen applications. All switches have positive center detent and shutter type dust cover to prevent dirt and dust from contaminating switch contacts.



SPECIFICATIONS

Contact Ratings: 0.5A DC and 3A AC, 125V non-inductive.
Listings: UL recognized, card E40688 CSA certified (marked) switches available on special order only.
See page 282.
Housing: Steel, plated.
Detent Spring: Music wire.
Shim: Black vulcanized fiber.
Knob: Black thermoplastic.
Terminals & Slider Contacts: Copper alloy, silver-plated.
Insulation: Phenolic.
Temperature Range: -4°F to +158°F (-20°C to +70°C).
Dielectric Strength: 1 kV rms @ sea level.
Insulation Resistance: 1 k MΩ minimum.

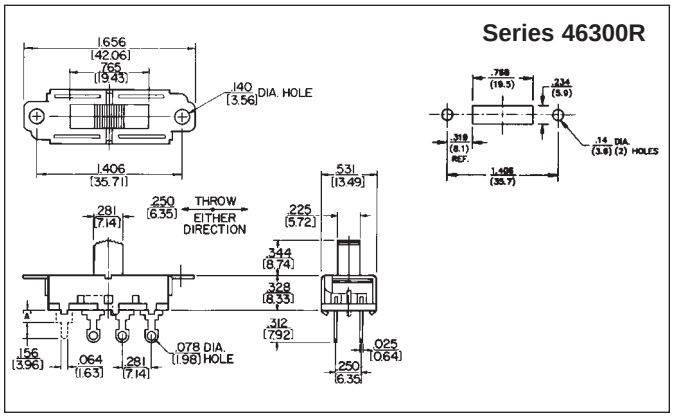

SPECIAL ORDER FEATURES:

1. .344" (8.74 mm) high knobs are standard; other heights available. See chart on page 283.
2. Series 46000R switches are CSA marked on special order only. See page 282.

PART NUMBERS

Part** Number	Circuitry	Action Positions*			Schematic
		#1	Center	#2	
46311LDR	SPTT	L	L	L	VI
◊**46311MDR**	SPTT	M	L	M	VI
◊**46311TDR**	SPTT	L	L	M	VI
46313LDR	DPTT	L	L	L	2-VI
46313MDR	DPTT	M	L	M	2-VI
46313TDR	DPTT	L	L	M	2-VI

◊ Special order only; contact Switchcraft for price and delivery.
* L - Locking; M - Momentary.
** "C" prefix specifies .078" (1.98) PC terminals, no mounting ears.



SOLDER GUARDS

Insulating Solder Guards, P-2370 (2-position); and ◊P-2633 (3-position); slip over solder lug terminals and prevent solder splashes from entering interior (contact area) of switch. Made of fishpaper .01" (.25 mm) thick, Solder Guard slips over terminals quickly and easily. Precision punched slots lock onto terminals, and rectangular shape conforms with dimension of switch terminal board. Minimizes costly production line rework.

Solder Guards can be used on:

- General Purpose, Series 46000R
- Tandem, Series 47000R.

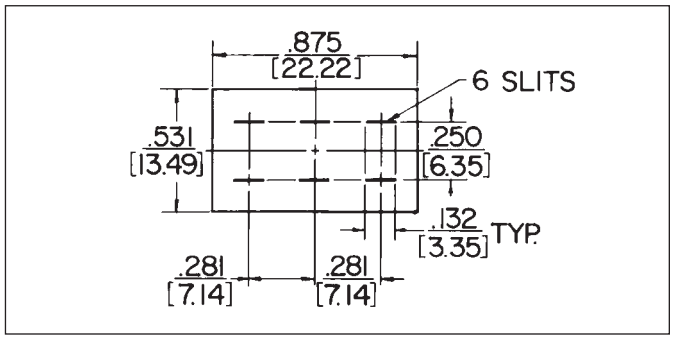

DIMENSIONS ARE FOR REFERENCE ONLY Inch (mm)

* Please visit the product pages on our website for the most up-to-date product information

GENERAL PURPOSE SWITCHES - TANDEM

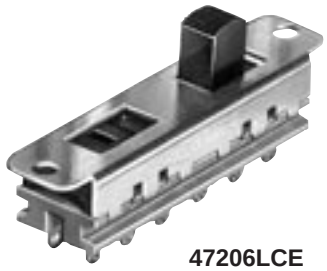

47206LCE

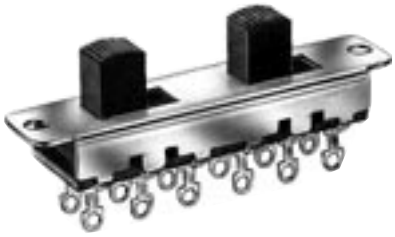

47206LR



47227LFR

SERIES 47200E, 47200R - 2 POSITION

Space saving, two-gang slide switches are contained in one housing. Switching is locking type with non-shorting contacts.

SPECIAL ORDER FEATURES

1. .344" (8.74 mm) high knobs or flush knobs are standard, depending on switch selected; other heights available. See chart on page 283.
2. Series 47000R switches are CSA marked on special order only. See page 282.

SPECIFICATIONS

Contact Ratings: 0.5A DC and 3A AC, 125V non-inductive, (Also 1.5A, 250V non-inductive for Series 47000E only.) 47227LFR switches are not designed to switch more than 125V, and must be set to desired position before power is applied to equipment or appliance.
Listings: UL recognized, card E40668, and CSA certified (card 28260). Series 47000R switches are CSA certified on special order only. See page 282.
Housing: Steel, plated.
Knob: Black thermoplastic.
Terminals and Slider Contacts: Copper alloy, silver-plated.
Insulation: Series 47000E - Thermoplastic.
Series 47000R - Rigid plastic.
Temperature Range: -4°F to +158°F (-20°C to +70°C).
Dielectric Strength: 1 kV rms @ sea level.
Insulation Resistance: 1 k MΩ minimum.

PART NUMBERS

Series 47200E	Series 47200R	Description	Schematic
◊47202LE	◊47202LR	SPST - SPST	II II
◊47203LE	◊47203LR	SPDT - SPDT	III III
◊47204LE	◊47204LR	DPST - DPST	2-I 2-I
◊47204LCE	◊47204LCR	DPST - DPST	2-I 2-I
◊47206LE	◊47206LR	DPDT - DPDT	2-III 2-III
◊47206LCE	◊47206LCR	DPDT - DPDT	2-III 2-III
-	◊47215LR	SPST - SPDT	II III
-	◊47215LCR	SPST - SPDT	II III
-	◊47217LR	SPST - DPST	II 2-II
-	◊47217LCR	SPST - DPST	II 2-II
-	◊47221LR	SPDT - DPST	III 2-II
-	◊47221LCR	SPDT - DPST	III 2-II
	◊47227LFE	DPDT - DPDT	2-V
	◊47227LFR	DPDT - DPDT	2-V

NOTE: Series 47200E and 47200R - All switches have two independent knobs, except:
- 47204LE, 47204LCR, 47206LCE and 47206LCR have one knob and one flush actuator.
- 47227LFE and 47227LFR have internal mechanical coupling and two flush, slotted screwdriver actuators.

◊ Special order only; contact Switchcraft

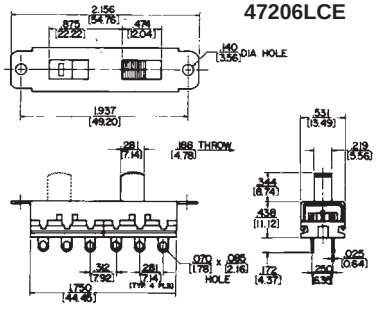

47206LCE

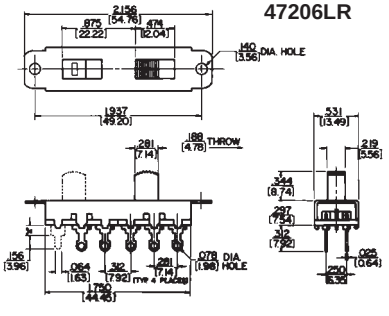

47206LR

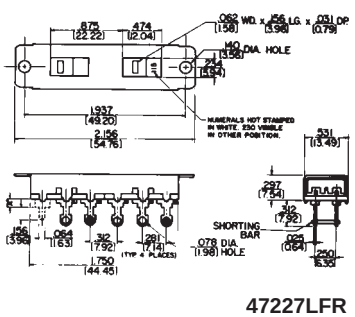

47227LFR

DIMENSIONS ARE FOR REFERENCE ONLY Inch (mm)

® Registered trademark of Switchcraft, Inc.
Note: Contact your Switchcraft Representative for price and delivery

* Please visit the product pages on our website for the most up-to-date product information

GENERAL PURPOSE SLIDE SWITCHES (continued)

SERIES 49300 - 3 POSITION

Large, heavy duty, three and four pole slide switches. Standard mounting clearance is .141" (3.58 mm). Series 49300L, non-shorting contacts; Series 49300LS, shorting contacts.

SPECIFICATIONS

Contact Ratings: 0.5A DC and 3A AC, 125V non-inductive.
Listings: UL recognized (card E40668); CSA certified (marked) switches available on special order only.
See page 282.
Housing: Steel, plated.
Detent Shim: Copper alloy.
Knob: Black thermosetting plastic.
Terminals and Slider Contacts: Copper alloy, silver-plated.
Insulation: Rigid plastic.
Temperature Range: -4°F to +158°F (-20°C to +70°C).
Dielectric Strength: 1 kV rms @ sea level.
Insulation Resistance: 1 k MΩ minimum.

SPECIAL ORDER FEATURES

1. .5" (12.7 mm) high knobs are standard; other heights available. See chart on page 283.
2. #4-40 extruded and tapped mounting holes available.
3. Series 49300L switches are CSA marked on special order only. See page 282.

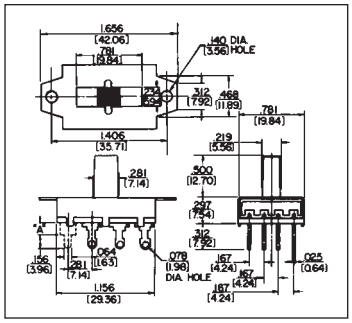



49331L

PART NUMBERS

Part Number	UL & CSA Listing	Description	Schematic
◊49309L	Yes	3-PDT, Locking*	3-VII
◊49309LS	No	3-PDT, Locking*	3-VII
◊49329L	Yes	3-PTT, Locking	3 -VI
◊49329LS	No	3-PTT, Locking	3 -VI
◊49312L	Yes	4-PDT, Locking*	4-VII
◊49312LS	No	4-PDT, Locking*	4-VII
◊49331L	Yes	4-PTT, Locking	4 -VI
◊49331LS	No	4-PTT, Locking	4 -VI

* 3rd position is off.
◊ Special order only; contact Switchcraft.

SERIES 50200 - 2 POSITION

A larger 2 position "double wipe" slide switch offering three and four poles of switching and locking or momentary action. Series 50200L and M, non-shorting; Series 50200LS and MS, with shorting contacts.

SPECIFICATIONS

Contact Ratings: 0.5A DC and 3A AC, 125V non-inductive.
Listings: UL recognized (card E40668); CSA certified (card 28260). Series 50200L switches are CSA marked on special order only. See page 282.
Housing: Steel, plated.
Detent Shim: Copper alloy.
Knob: Black thermosetting plastic.
Terminals and Slider Contacts: Copper alloy, plated.
Insulation: Rigid plastic.
Temperature Range: -4°F to +158°F (-20°C to +70°C).
Dielectric Strength: 1 kV rms @ sea level.
Insulation Resistance: 1 k MΩ minimum.

SPECIAL ORDER FEATURES

1. .344" (8.74 mm) high knobs are standard; other heights available. See chart on page 283.
2. 50212LF available with flush, screwdriver slotted actuator and has 4 PDT locking action.
3. Extruded and tapped 4-40 or 6-32 holes available.
4. Series 50200L switches are CSA marked on special order only. See page 282.

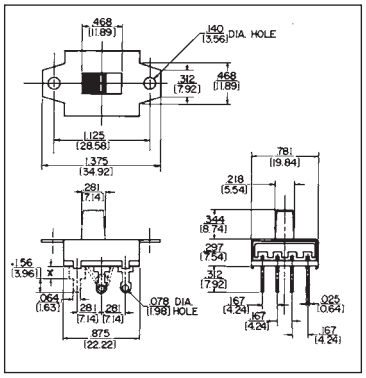



50209L

PART NUMBERS

Part Number	Description	Schematic
◊50207L	3PST - Locking	3-I
◊50207M	3PST, N.O. Momentary	3-I
◊50208L	4PST, Locking	4-I
50209L ◊50209LS	3PDT, Locking	3-III
◊50209M ◊50209MS	3PDT, Momentary	3-II
50212L ◊50212LS	4PDT, Locking	4-III

◊ Special order only; contact Switchcraft.

DIMENSIONS ARE FOR REFERENCE ONLY Inch (mm)

* Please visit the product pages on our website for the most up-to-date product information

MINIATURE SLIDE SWITCHES

SPECIAL ORDER



56206L1



C56206L2

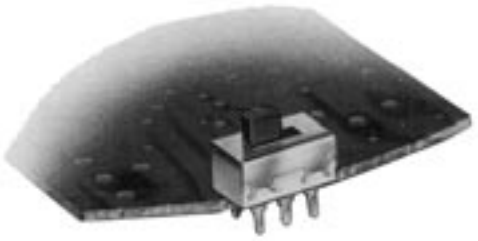

C56206L2

SERIES 56200, C56200 - 2 POSITION

"Tini-Slide" slide switches have Exclusive SNAP SLIDE lifting and wiping action. This unique, positive action combines the best features of "snap" and "slide" movements into the design of a superior switch. Pitting, burning and contamination are minimized. Contacts lift through an air gap, drop on stationary contacts, and slide, wiping themselves clean. Subminiature size is ideal where useable space is at a premium.

SPECIFICATIONS

Contact Ratings: 0.5A, 125V AC or DC, non-inductive. Minimum life at rated load 6000 cycles. Resistance after 6000 cycles at rated load is 50 milliohms maximum.
Terminals: PC Type - silver-plated. Each terminal has standoff shoulder for stable mounting and space for board clearance.
Mounting: Flange, (56206L1 and 56206L2) - .1" (2.54 mm) holes for screw or mounting rivet. PC - Direct mounting to PC boards up to .093" (2.36 mm) thick.
Knob: Molded thermoplastic (UL 94V-1).
Terminal Board: Molded thermoplastic (UL 94V-0).
Terminals: Copper alloy, silver-plated.
Contact Sliders: Copper alloy.
Temperature Range: -4°F to +158°F (-20°C to +70°C).
Dielectric Strength: 1 kV rms @ sea level.
Insulation Resistance: 1 k MΩ minimum.

SPECIAL ORDER FEATURES

1. .2" (5.08 mm) high knobs are standard; other heights available on special order. See page 283.
2. Red and white knobs available.
3. Mounting flanges with .1" (2.54 mm) diameter holes on C56206L1 or C56206L2. Flange holes tapped #4-40 on 56206L1 or 56206L2 (where production quantities warrant).
4. UL stamped on special order.

PART NUMBERS

Part Number	Dimension "B" Inch (mm)	Description	Schematic
56206L1	-	DPDT, Locking	2-III
56206L2	-	DPDT, Locking	2-III
C56206L1	.573 (14.55)	DPDT, Locking	2-III
C56206L2	.352 (8.94)	DPDT, Locking	2-III

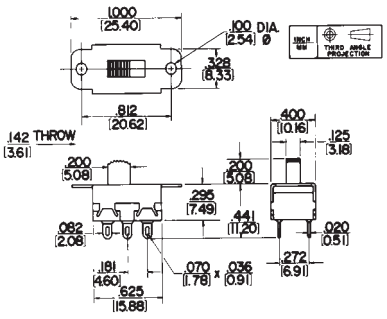

56206L2

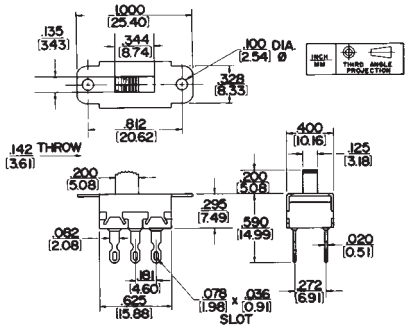

56206L1

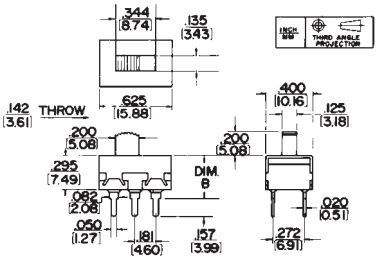

C56206L1 & 2

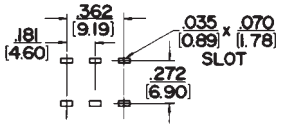

RECOMMENDED PC BOARD LAYOUT (Component Side)

DIMENSIONS ARE FOR REFERENCE ONLY Inch (mm)

® Registered trademark of Switchcraft, Inc.
Note: Contact your Switchcraft Representative for price and delivery

* Please visit the product pages on our website for the most up-to-date product information

MINIATURE SLIDE SWITCHES (continued)



56313L1



56313L2



C56313L1



C56313L2

SERIES 56300,C56300 - 3 POSITION

Series 56300 "Tini-Slide" switches provide ultra-reliable 3-position switching. They afford maximum space savings in military, industrial and consumer applications, such as instrumentation, test and ground support equipment, appliances, computers, and control devices.

SPECIFICATIONS

Contact Ratings: 0.5A, 125V AC or DC, non-inductive. Minimum switch life is 6000 cycles. Resistance after 6000 cycles at rated load is 50 milliohms maximum.
Terminals: Solder Lugs - 56313L1 with wrap around notch; 56313L2 with solder lug. PC - .585" (14.68 mm) "B" dimension and .364" (9.24 mm) "B" dimension.
Mounting: Mounting ears for mounting to chassis of panels with screws or rivets (not supplied). Switches with PC terminals have stand-off shoulders for solid PC mount.
Knob: Molded thermoplastic (UL 94HB).
Terminal Board: Molded thermoplastic (UL 94V-0).
Terminals: Copper alloy, silver-plated.
Contact Sliders: Copper alloy.
Temperature Range: -4°F to +158°F (-20°C to +70°C).
Dielectric Strength: 1 kV rms @ sea level.
Insulation Resistance: 1 k MΩ minimum.

SPECIAL ORDER FEATURES

1. .187" (4.75 mm) high knob is standard; Other heights available on special order. See page 283.
2. Red and white knobs available.
3. Two mounting variations:
   a. Tapped #4-40 holes on mounting ears for machine screws.
   b. Mounting ears with .1" (2.54 mm) diameter holes on switches with PC terminals.

PART NUMBERS

Part Number	Dimension "B" Inch (mm)	Description	Schematic
56313L1	-	DPTT, Locking	2-VI
56313L2	-	DPTT, Locking	2-VI
C56313L1	.585(14.85)	DPTT, Locking	2-VI
C56313L2	.364 (9.24)	DPTT, Locking	2-VI

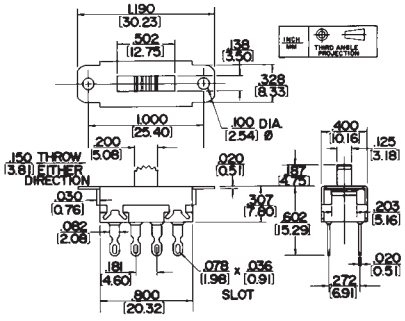

56313L1

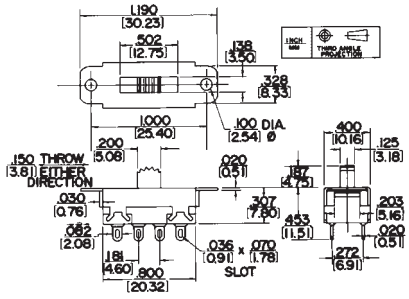

56313L2

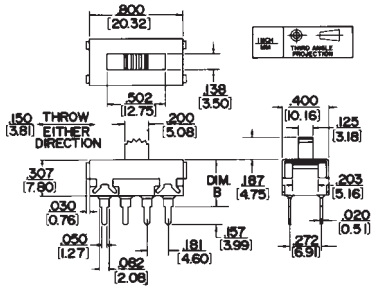

56313L1 & L2

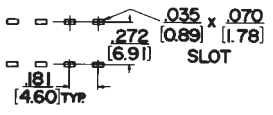

RECOMMENDED PC BOARD LAYOUT (Component Side)

DIMENSIONS ARE FOR REFERENCE ONLY Inch (mm)

* Please visit the product pages on our website for the most up-to-date product information

SIDE-SLIDE®/MINIATURE SLIDE SWITCHES



62206L

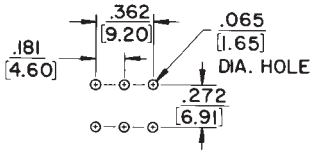

RECOMMENDED PC BOARD LAYOUT (Component Side)

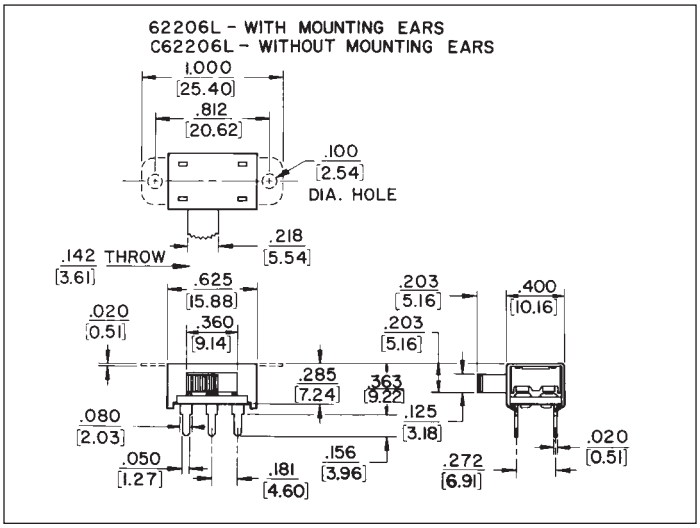

SERIES 62200 - 2 POSITION

2-position locking action with side knob actuator. Side knob provides low profile, saving space on PC boards.

SPECIFICATIONS

Contact Ratings: 0.5A, 125V AC or DC.
PC Terminals: Copper alloy, silver plated.
Housing: Steel, plated.
Knob: Molded thermoplastic.
Terminal Board: Rigid plastic.
Sliders: Copper alloy, plated.
Dielectric Strength: 1000 V rms.
Insulation Resistance: 1 k MΩ minimum.

SPECIAL ORDER FEATURES

1. Various knob heights available on special order.
2. Various lengths available on special order.

PART NUMBERS

Part Number	Description	Schematic
◊62206L	DPDT, with mounting ears, Locking	2-III
C62206L	DPDT, without mounting ears, Locking	2-III

◊ Special order only; contact Switchcraft.

MINIATURE SLIDE SWITCHES



SERIES C63200 - 2 POSITION, 4 POLE

C63200 switches designed for applications, such as: instrumentation, test and ground support equipment, computers, data communications and medical equipment. PC mounting on standard industry .100" (2.54 mm) x .200" (5.08 mm) centers. Mounts on PC boards up to .093" (2.36 mm) thick. Molded black thermoplastic knobs. Terminals are copper alloy, gold-plated on contact area, tinned on terminal end.

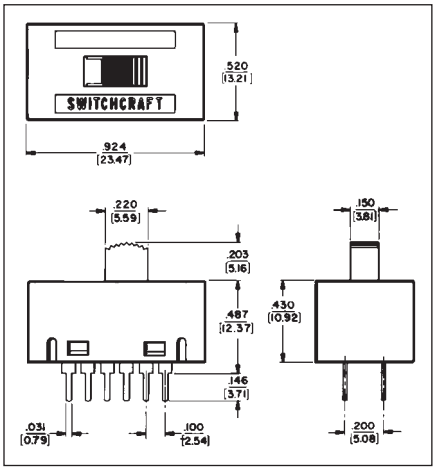

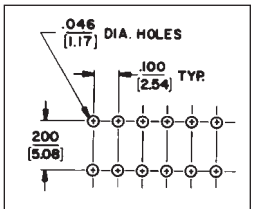

RECOMMENDED PC BOARD LAYOUT (Component Side)

Part Number	Action	Switching	Ratings	Schematic	Terminals
C63212L	Locking	4PDT	300mA max. 30V AC	4-III	Copper alloy, gold-plated on contact area, tinned on terminal end

DIMENSIONS ARE FOR REFERENCE ONLY Inch (mm)

® Registered trademark of Switchcraft, Inc.
Note: Contact your Switchcraft Representative for price and delivery

* Please visit the product pages on our website for the most up-to-date product information

EUROPEAN LINE VOLTAGE SELECTOR SWITCHES

RED ACTUATOR

RED ACTUATOR



EPS1PC3



EPS2PC2



EPS3SL1



EPS4PC3

SERIES EPS1, EPS2, EPS3, EPS4 - 2 POSITION

European Power Selector Switches are designed for quick, easy programming/selection of 115V-230V primary power. These switches provide OEM designers with an excellent selection of PC and solder lug terminals and ratings up to 10A, 125V AC rating for electrical/electronic equipment and systems headed for the INTERNATIONAL marketplace.

HOUSING AND ACTUATOR

Switches have positive, double detents for “sure” locking into position. Screwdriver slot actuator virtually eliminates the possibility of accidental operation and minimizes tampering. Molded-in legends are: 115-230V. Terminals are staked into housing.

SPECIFICATIONS

Contact Ratings: EPS1, EPS2 - 2A, 250V AC and 4A, 125V AC. EPS3, EPS4 - UL and CSA - 10.1A, 125V; 5A, 250V. VDE - 10A, 250V.
Listings: UL and CSA recognized, UL card E40668; CSAcard 28260. 2A, 250V AC is VDE listed, VDE #13707 (for European applications). Designed to conform to requirements of CEE (International Commission on Rules for the Approval of Electrical Equipment, Publication 24) and the IEC (International Electrotechnical Commission).
Housing: Molded black glass-reinforced plastic.
Actuator and Cover: Molded thermoplastic.
Terminals: Copper alloy, silver-plated.
Slider Contacts: EPS1, EPS2 - Bi-Metal, silver on copper alloy. EPS3, EPS4 - Copper alloy with silver cadmium oxide inlay.
Temperature Range: -4°F to +158°F (-20°C to +70°C).
Dielectric Strength: 2kV rms @ sea level.
Insulation Resistance: 1 k MΩ minimum.

SPECIAL ORDER FEATURES

Series EPS actuators having legends other than 115V and 230V are available on special order.
NOTE: Contact Switchcraft for details.

PART NUMBERS

Series EPS1

Part Number	Terminals	Dimension “B” Inch (mm)	Schematic
◊EPS1PC1	Straight PC	.681 (17.297)	2-III
◊EPS1PC2	Straight PC	.719 (18.263)	2-III
EPS1PC3	Right-Angle PC	-	2-III
EPS1SL1	Solder Lugs	-	2-III

◊ Special order only; contact Switchcraft.

Series EPS2

Part Number	Description	Dimension “B” Inch (mm)	Schematic
EPS2PC1	Straight PC	.730 (18.542)	2-III
EPS2PC2	Straight PC	.768 (19.507)	2-III
EPS2PC3	Right-Angle PC	-	2-III

Series EPS3

Part Number	Terminals	Dimension “B” Inch (mm)	Schematic
EPS3PC1	Straight PC	.681 (17.297)	2-III
EPS3PC2	Straight PC	.719 (18.263)	2-III
EPS3PC3	Right-Angle PC	-	2-III
EPS3SL1	Solder Lugs	-	2-III

Series EPS4

Part Number	Description	Dimension “B” Inch (mm)	Schematic
EPS4PC1	Straight PC	.730 (18.542)	2-III
EPS4PC2	Straight PC	.768 (19.507)	2-III
EPS4PC3	Right-Angle PC	-	2-III

DIMENSIONS ARE FOR REFERENCE ONLY Inch (mm)

* Please visit the product pages on our website for the most up-to-date product information

EUROPEAN LINE VOLTAGE SELECTOR SWITCHES (continued)

EUROPEAN LINE VOLTAGE SELECTOR SWITCH

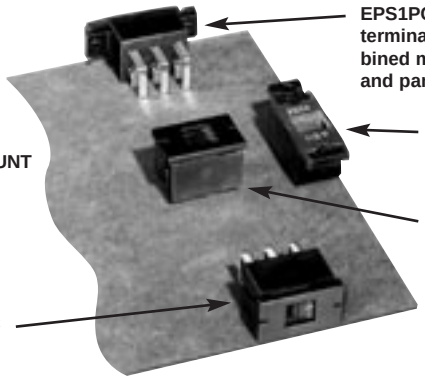

PC MOUNT

EPS1PC3 - Long, right-angle PC terminals and flanges for combined mounting to PC board and panel/chassis.

EPS1PC1 - Short, PC terminals and flanges for combined mounting to PC board and panel/chassis.

EPS2PC2 - Long, PC terminals for direct mounting to PC board only.

EPS2PC3 - Long, right-angle PC terminals for combined PC terminating and mounting.

PANEL/CHASSIS MOUNT

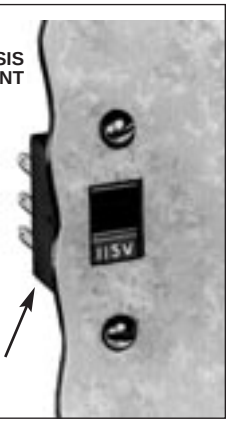

EPS1SL1 - Solder lug terminals and mounting flanges for panel/chassis mount.

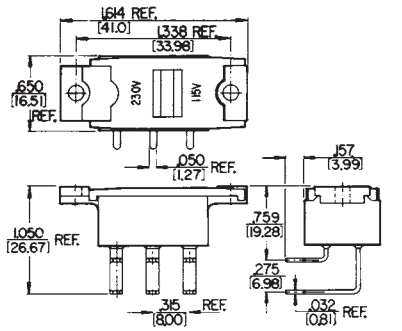

EPS1PC3

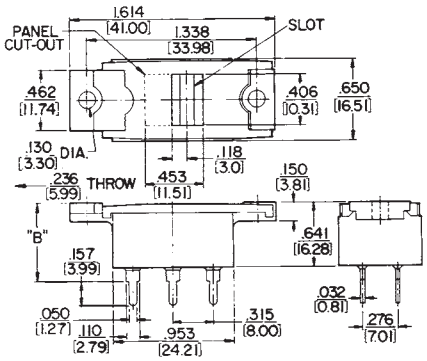

EPS1PC1 & PC2

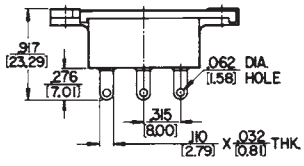

EPS1SL1

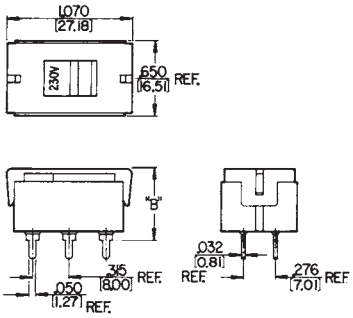

EPS2PC1 & PC2

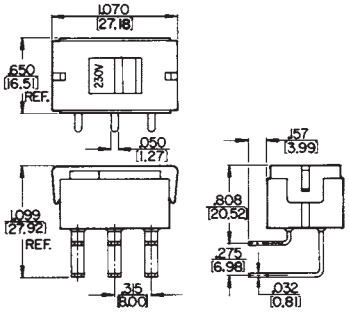

EPS2PC3

PANEL OPENING DATA

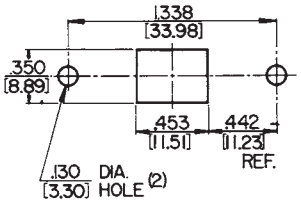

SERIES EPS1

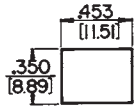

SERIES EPS2

RECOMMENDED PC BOARD LAYOUT (Component Side)

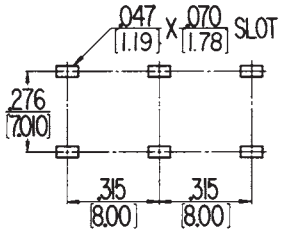

DIMENSIONS ARE FOR REFERENCE ONLY Inch (mm)

® Registered trademark of Switchcraft, Inc.
Note: Contact your Switchcraft Representative for price and delivery

* Please visit the product pages on our website for the most up-to-date product information

EUROPEAN LINE VOLTAGE SELECTOR SWITCHES (continued)

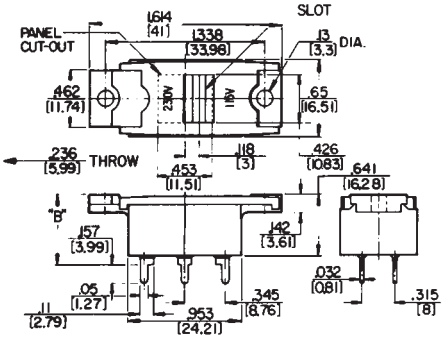

EPS3PC1 & EPS3PC2

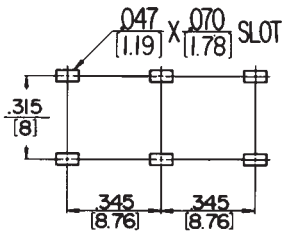

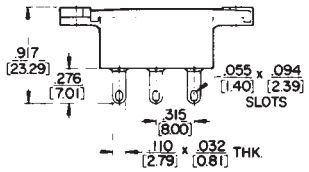

EPS3SL1

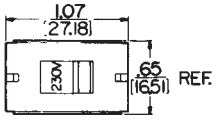

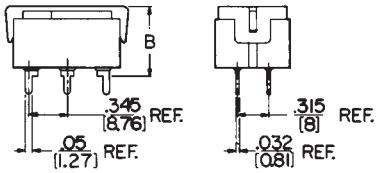

EPS4PC1 & EPS4PC2

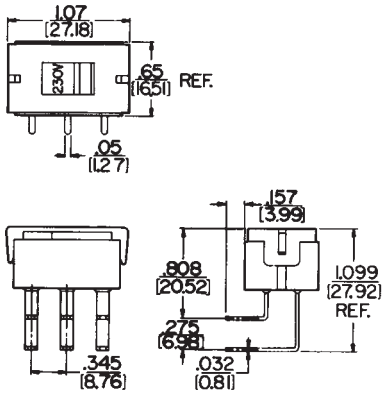

EPS4PC3

PANEL OPENING DATA

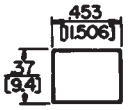

SERIES EPS4

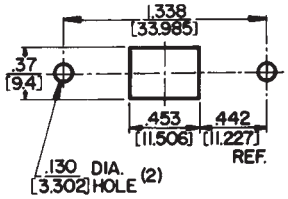

SERIES EPS3

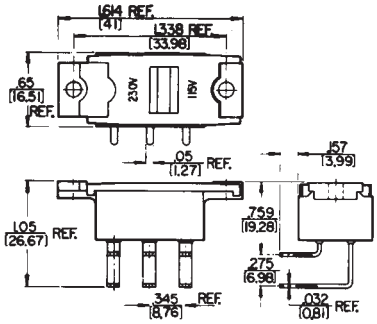

EPS3PC3

DIMENSIONS ARE FOR REFERENCE ONLY Inch (mm)

* Please visit the product pages on our website for the most up-to-date product information

LEVER SWITCHES

DESIGN FEATURES

High quality, field-proven Switchcraft® lever switches are available in a wide selection of illuminated and non-illuminated versions, 2- and 3-position, locking and non-locking functions can be provided. Switchcraft illuminated lever switches feature choice of colors, wide selection of switching circuits, single lamp illumination and ease of mounting and lamp replacement.

All switches utilize nickel silver springs without "form" at point of flexing to insure long spring life. The springs are assembled into a conventional stack assembly, insulated from each other by phenolic spacers with plastic tubing press-fit through each stack, insuring correct alignment of contacts and providing high insulation resistance.

APPLICATIONS

Various front panel switching applications on computers, telecommunications systems, industrial control equipment, intercoms, ground support systems, medical electronics, scientific instruments, broadcast consoles and test instrumentation.

CONTACTS

Below are listed the basic contacts available on switches in this catalog:

1. Fine silver contacts rated at 2A, 200W (maximum) AC non-inductive load.
2. Welded cross bar silver contacts rated at 3A, 300W (maximum) AC non-inductive load.
3. Welded cross bar palladium contacts rated at 2A, 200W (maximum) AC non-inductive load.
4. Welded cross bar gold alloy contacts rated at up to 1A, 100W (maximum) AC non-inductive load. (Dry circuit applications.)

BASIC CONTACT FORMS

Below are the basic contact forms available standard on all Switchcraft Lever Switches. Specify circuits needed by referring to the letter identification and respective location on frame. See dimensional drawings for stack switch location.

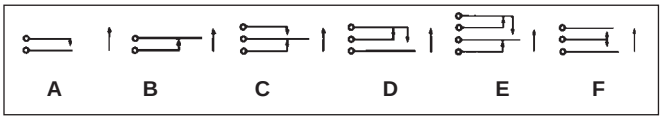

To avoid ordering special switches it is possible to use a larger standard circuit, providing the circuit fulfills your requirements. Circuit Form K is widely used in talk-listen (intercom) function applications. In normal position (neutral), switch does not contact upper or lower contact spring. During typical operation, lever is held in upper (momentary) position while speaking. Releasing lever allows switch to return to neutral. For listening, lever is moved to down (locking) position. Lever is manually returned to neutral when finished.

SCHEMATIC DIAGRAM FORM K



ORDERING STANDARD SWITCHES

Order lever switches by part number from pages 295 through 298.

LAMP DATA

Lever-Lite® switches use T-1 3/4 flange base lamps which are available from commercial sources.

ORDERING SPECIAL SWITCHES

Lever Switches

Should you desire a special version of any Switchcraft® lever switch not shown here, we require the following information:

1. Switch series.
2. Number of positions.
3. Mechanical action (locking, non-locking, etc.).
4. Contact configuration for each position.
5. Type of contact material.
6. Color sequence (Lever-Lite III).

UL RECOGNIZED LEVER SWITCHES

Seven series of Switchcraft lever switches are UL recognized. These switches are available on special order to fulfill your switching requirements which specifically require UL listed switching devices.

1. Series 12000
2. Series 41000

NOTE: Refer to switch series in this catalog for full mechanical specifications and additional standard and special features.

DIMENSIONS ARE FOR REFERENCE ONLY Inch (mm)

® Registered trademark of Switchcraft, Inc.
Note: Contact your Switchcraft Representative for price and delivery

* Please visit the product pages on our website for the most up-to-date product information

LEVER SWITCHES (continued)



LEVER-LITE® III
SERIES 84000 - ILLUMINATED LEVER SWITCHES

Lever-Lite® III illuminated lever switches are designed for front-of-panel mounting, relamping, terminating, color changes and removal. A minimum of time is required to install singly, in rows, or in matrix arrays to meet a wide variety of switching applications. 2- and 3-position types are available in non-locking functions. Mounts on .875" (22.22 mm) horizontal centers or 1.5" (38.1 mm) vertical centers. Talk-listen (intercom) function is also available. Illumination technique provides a different color for each lever position.

LAMPS

Standard T 1-3/4" midget flange-base lamps (not supplied) are available in voltages up to 28V.

SPECIAL ORDER FEATURES

1. Talk-Listen (Intercom) function.
2. Welded cross bar gold alloy for dry circuit and silver contacts are available. See page 294.

ILLUMINATION

A single internal lamp provides brilliant lever lighting in any color required. Standard factory installed color filters are provided as follows: Series 84000, Multi-Color Illumination 2-position - Amber (neutral position); green (down position). 3-position - Red (up position); amber (neutral position); green (down position). One-color (all positions) and non-illuminated switches can be specified on special order. Switchcraft will install filters for non-standard illumination requirements at nominal cost on special order.

MOUNTING

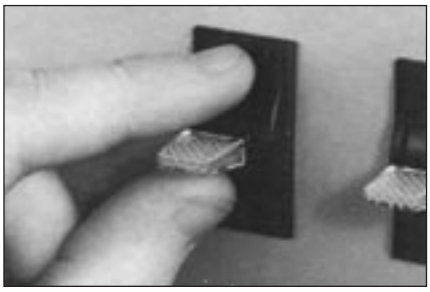

Grasp fingernail slots on opposite sides of escutcheon and snap out. Next, grasp lever and pull lever assembly free. Insert switch into panel hole.

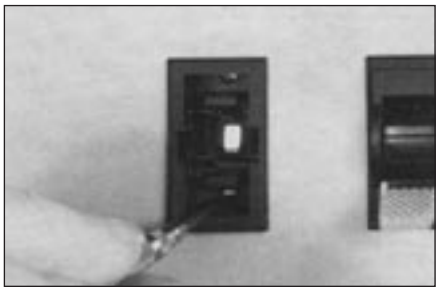

Turn two internal screws clockwise with screwdriver to securely mount switch to panel.

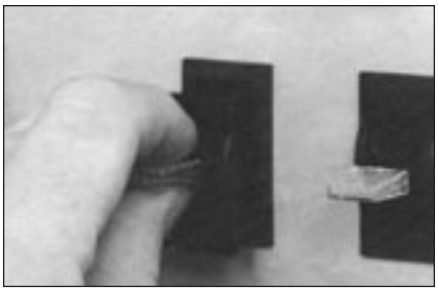

Replace lever assembly and “snap” escutcheon into place. Installation complete!

RELAMPING/REPLACING COLOR FILTERS

Lever-Lite III switches are designed for simplified lamp installation and replacement, and color filter changes or custom installation in the field or on the OEM production line. Lamps and filters may be changed at any time with ease and without dismounting switch from panel or disturbing wiring.

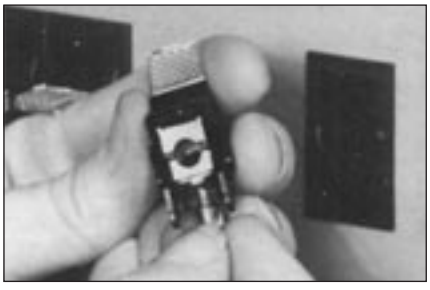

Remove escutcheon and lever assembly. (see “MOUNTING” above) For relamping, pull lamp out of retainer with finger-tip. Replace lamp.

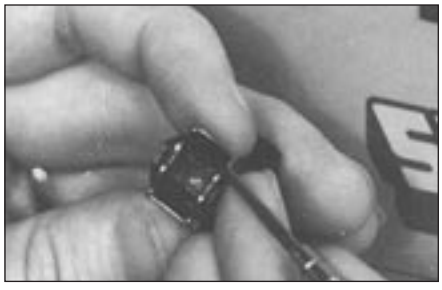

For color filters, use fingernails or small screwdriver to remove. Gently lift (don’t pry) up under edge of filter until it “pops” out.

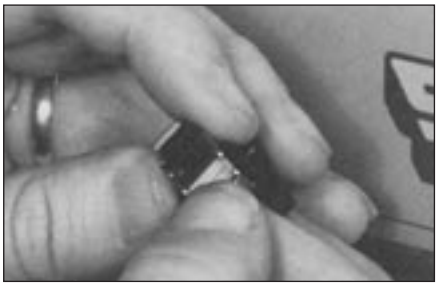

Place new filter in position and press until it “snaps” in. Replace lever assembly and escutcheon. (see “MOUNTING” above)

DIMENSIONS ARE FOR REFERENCE ONLY Inch (mm)

* Please visit the product pages on our website for the most up-to-date product information

LEVER SWITCHES (continued)

LEVER-LITE® III SERIES 84000 - ILLUMINATED LEVER SWITCHES

SPECIFYING LEVER-LITE® III SWITCHES

1. Basic Switch - Refer to Part Number table for ordering switches. For special switches, such as talk-listen (intercom) function, special circuit forms, or non-illuminated switches, contact factory for price and delivery.
2. Illumination - Supplied with standard color filters installed. Switchcraft will install other combinations at nominal extra cost.
3. Lamps - Lamps are not supplied with switches.

SPECIFICATIONS

Mounting/Retaining Clips and Covers: Steel, plated.
Contact Ratings: Welded cross bar palladium contacts rated at 1A, 200W maximum AC non-inductive load are standard. Other contacts available. See "SPECIAL ORDER FEATURES" on page 295.

Springs: Copper alloy, plated.
Lamp Terminals: Copper alloy, plated.
Lamp Socket: Zinc, plated.
Terminals: Copper alloy, plated, straight solder lugs.
Housing, Escutcheon, Knob, Actuator and Switching Stacks Insulation: Molded plastic.
Temperature Range: -22°F to 158°F (-30°C to +70°C).
Dielectric Strength: 1 kV DC.
Leakage Resistance: 1,000 MΩ or greater.

K-131 COLOR FILTER KIT

Kit is available for changing or replacing color filters to meet illumination requirements. Each kit contains 3 filters of each color: Amber, Blue, Green, Red, White and Yellow.

SWITCHCRAFT PART NUMBER K-131

REPLACEMENT LEVERS

Number G6083 (for locking lever)
Number G6084 (for non-locking lever)

PART NUMBERS

TWO POSITION

Part Numbers		
Non-Locking	Locking	Switching
◊84206	84206L	2-C
◊84212	◊84212L	4-C

THREE POSITION

Part Numbers		Position 1	Position 2
◊84306	84306L	1-C	1-C
◊84312	84312L	2-C	2-C
◊84324	84324L	4-C	4-C

◊ Special order only; contact Switchcraft.

LEVER-LITE® SERIES 84000

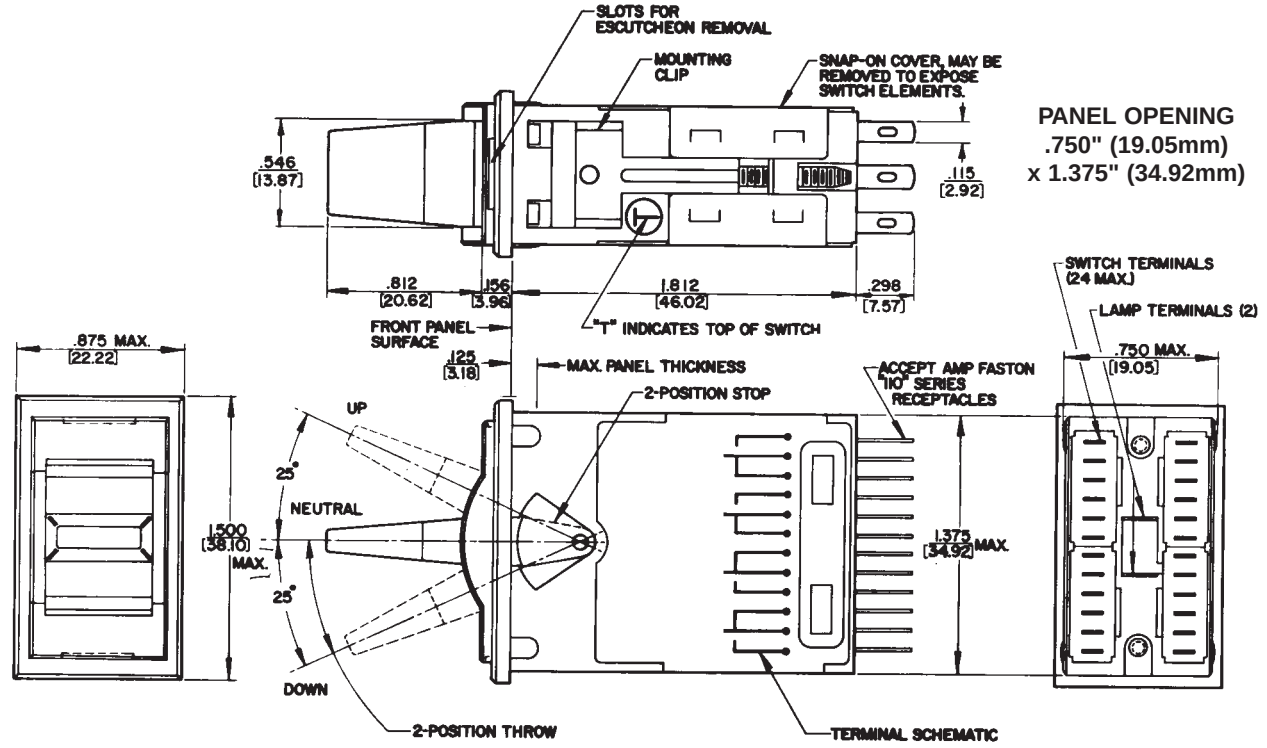

DIMENSIONS ARE FOR REFERENCE ONLY Inch (mm)

® Registered trademark of Switchcraft, Inc.
Note: Contact your Switchcraft Representative for price and delivery

* Please visit the product pages on our website for the most up-to-date product information

LEVER SWITCHES (CONTINUED)


12010


12011


12012

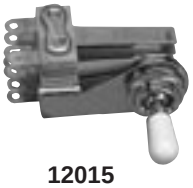
12015


12013

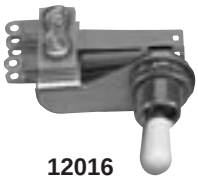
12016

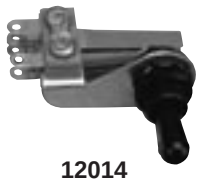
12014


12017

LEV-R® SWITCH SERIES 12000

Electrical

Contact Ratings: Fine silver contacts rated at 3A, 300W maximum AC non-inductive load standard. Other contacts available

Leakage Resistance: 1,000 MΩ or greater

Dielectric Strength: 250 VDC

Material

Frame: Copper alloy, plated (3,000, 13,000); Steel, plated (12,000)

Bushing and Shaft: Copper alloy, plated

Springs: Copper alloy

Knob: Black molded thermoplastic

Mounting Hardware: Knurled copper alloy locknut T10711, supplied. P10531 hex locknut, special order

Insulation: Rigid plastic spacers with plastic tubing through stack. Rigid plastic and/or thermoplastic lifters. Thermoplastic cam on actuator end

12000 SERIES RA LEV-R SWITCHES

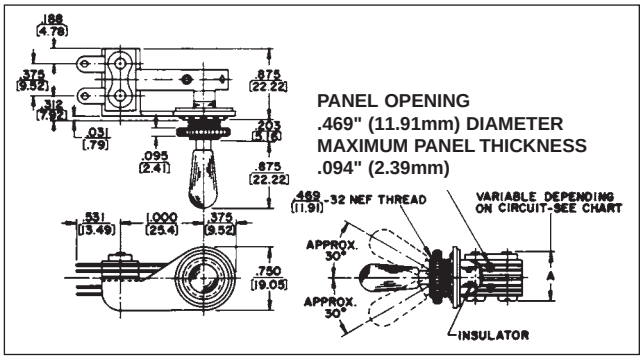

12000 SERIES STRAIGHT LEV-R SWITCHES

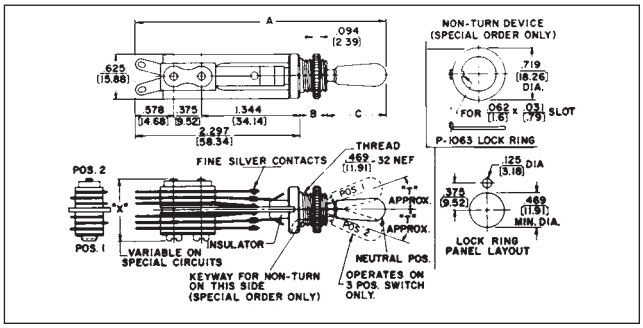

PART NUMBERS

TWO POSITION NON-LOCKING*+ THREE POSITION NON-LOCKING*

Part Number	Stack Hgt. "X" & "Y" (max.)	Switching	Part Number	Stack Hgt. "X" & "Y" (max.)	Switching Pos.1	Switching Pos. 2
◊12001	.719 (18.26)	1-A	◊12010	.703 (17.86)	1-B	1-B
◊12002	.688 (17.48)	1-B	◊12011	.703 (17.86)	1-B	1-B
◊12003	.750 (19.05)	1-C	◊12012	.766 (19.46)	1-B	1-B
◊12003D	.813 (20.65)	1-D	◊12013	.703 (17.86)	1-B	1-C
◊12004	.906 (23.01)	2-A	◊12014	.703 (17.86)	1-B	1-B
◊12005	.875 (22.22)	2-B	◊12015	1.078 (27.49)	2-B	2-B
◊12006	1.000 (25.40)	2-C	◊12016	.703 (17.86)	1-B	1-B
◊12006D	1.063 (27.00)	2-D	◊12017	.703 (17.86)	1-B	1-B
			◊12033	.719 (18.26)	1-K	
			◊12034	.813 (20.65)	1-A	1-A
			◊12035	.750 (19.05)	1-B	1-B
			◊12036	.875 (22.22)	1-C	1-C
			◊12036D	1.000 (25.40)	1-D	1-D
			◊12037	.875 (22.22)	2-K	

INTERCOM SWITCHES

Part Number	Stack Height "X" &"Y"	Switching
◊12033T	.719 (18.26)	1-K
◊12037T	.875 (22.22)	2-K

* Add prefix "R" to part number if non-turn mounting is required. (Special order).
+ Add suffix "L" to part number if locking type is required.
◊ Special order only; contact Switchcraft.

Knobs			
T12742	Black	T127410	Ivory
T12745	White	P2912	Amber

Knobs must be ordered separately.

DIMENSIONS ARE FOR REFERENCE ONLY Inch (mm)

* Please visit the product pages on our website for the most up-to-date product information

LEVER SWITCHES (CONTINUED)



SERIES 41000

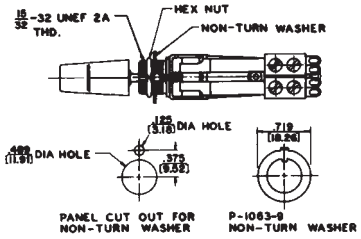

LT® SWITCH SERIES 41000

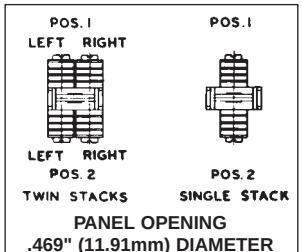

PANEL OPENING
.469" (11.91mm) DIAMETER
MAXIMUM PANEL THICKNESS
.25" (6.35mm)

LT® SWITCH
SERIES 41000

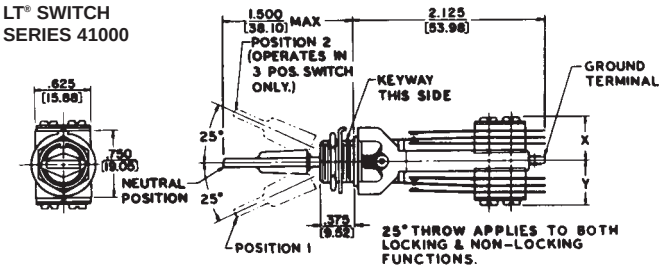

MOLDED DUST COVER

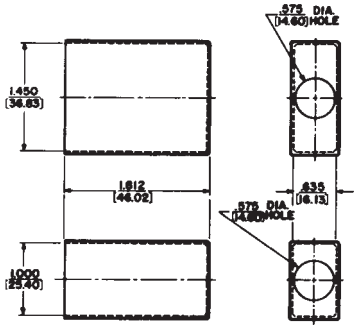

P2362
(up to 4-C per side)

P2360
(up to 2-C per side)

LT® SWITCH SPECIFICATIONS

Frame: Steel, plated.
Bushing and Actuator: Copper alloy, plated.
Springs: Copper alloy.
Contact Ratings: Welded cross bar palladium contacts rated at 2A, 200W maximum, AC non-inductive load are standard. See "SPECIAL ORDER FEATURES".
Terminals: Tin dipped solder lugs.
Mounting Hardware: Supplied with one copper alloy-plated hex locknut (P10531); and one non-turn washer (P10639).
Insulation: Rigid plastic spacers with plastic tubing through
the stack assembly. Lifters of thermoplastic.
Lifter-Roller Assembly: Molded plastic.
Knob: Supplied with a paddle style, screw-on black plastic knob. See "SPECIAL ORDER FEATURES".
Temperature Range: -22°F to 158°F (-30°C to +70°C).
Leakage Resistance: 1,000 MΩ or greater.

MOLDED DUST COVERS

Dust cover is an environment and electrical shield, protecting and improving appearance and increasing switch dependability. Covers enshroud complete switch, preventing build-up of dust, dirt, contamination.

SPECIAL ORDER FEATURES

1. Talk-Listen (Intercom) function.
2. Fine silver and other alloys available for contacts. See page 294.
3. UL recognized switches. See page 294.

LT® SWITCH PART NUMBERS

2 POSITION NON-LOCKING*

Part Numbers	Switching	Stack Heights Dimension "X" max.
◊41203	1-C	.531 (13.49)
41206	2-C	.531 (13.49)
◊41208	4-A	.615 (15.62)
41212	4-C	.750 (19.05)

3 POSITION NON-LOCKING*

	Position 1	Position 2	Dim. "Y"	Dim. "X"
◊41306	1-C	1-C	.531 (13.49)	.531 (13.49)
◊41308	2-A	2-A	.500 (12.7)	.500 (12.7)
41312	2-C	2-C	.531 (13.49)	.531 (13.49)
41324	4-C	4-C	.750 (19.05)	.750 (19.05)

*Add suffix "L" to part number for locking type.
To avoid ordering special switches, order a larger standard circuit, providing the circuit meets your requirements.
◊ Special order only; contact Switchcraft.

DIMENSIONS ARE FOR REFERENCE ONLY Inch (mm)

® Registered trademark of Switchcraft, Inc.
Note: Contact your Switchcraft Representative for price and delivery

* Please visit the product pages on our website for the most up-to-date product information

GENERAL PURPOSE STACK SWITCHES

GENERAL PURPOSE STACK SWITCHES
(SPECIAL ORDER ONLY)

Complete general purpose stack switch assemblies are made from a pile-up of various actuator springs, contact springs and lifters. These stack switch assemblies can be used on manually operated control devices where switching is operated by cams, push-buttons and other similar mechanical devices. The stack switch assembly is made up of an actuator spring and various contact springs. These current carrying members are insulated from each other by phenolic spacers with plastic tubing press fitted through the stack; thereby insuring correct alignment of contacts and providing high insulation resistance when mounted.

The types of General Purpose Stack Switch Components available are:
- .375" (9.52 mm) mounting centers
- .250" (6.35 mm) mounting centers
- "Tini-Stack" Switches .188" (4.78 mm) mounting centers
- Telephone Relay Type Switches .250" (6.25 mm) mounting centers

STACK SWITCH COMPONENTS
Switchcraft offers various stack switch components, such as contact springs, spacers, lifters, etc., in many lengths, thicknesses, mounting centers and other details.
Switchcraft can assemble components into innumerable different stack switch assemblies. It is impossible to catalog every type of stack that has been manufactured. Stack switch assemblies can be designed to meet UL requirements, but only as part of equipment.

.375" STACK SWITCHES





Thousands of switching combinations are possible. Switch mounting centers are .375" (9.52 mm) (minimum) with .25" (6.35 mm) wide switch parts. Practical spring length is 2.625" (66.68 mm) (maximum). Contact Switchcraft for selection of contacts and ratings.

.250" (6.35 MM) STACK SWITCHES





Thousands of switching combinations are possible with slightly smaller parts. Mounting centers are .250" (6.35 mm) (minimum) with .188" (4.78 mm) wide parts. Practical spring length is 2.125" (53.98 mm) (maximum). Contact Switchcraft for selection of contacts and ratings.

MINIATURE .188" (4.78MM) STACK SWITCHES





Many Tini-Stack® switching combinations are possible. Switch mounting centers are .188" (4.78 mm) (minimum). Practical spring length is 1.750" (44.45 mm) (maximum).

SPECIFICATIONS
Springs: Copper alloy, in most standard gauge thicknesses ranging from .006" (0.15 mm) to .016" (0.41 mm).
Spacers: Rigid plastic, available in thickness of .015" (0.38 mm), .032" (0.81 mm) and .046" (1.17 mm).
Contacts: Welded cross bar palladium rated at 2A, 200W AC non-inductive load. Gold alloy generally recommended for "dry" circuit applications.
Tubing: Thermoplastic.
Lifters: Thermoplastic.
Mounting Hardware: Pressure plate, twin nut and screws: Steel, plated.

TELEPHONE RELAY TYPE SWITCHES





Compact stack switches are particularly suitable for low activating force, such as in relay and magnetic operated devices. Contact Switchcraft for selection of contacts and ratings.

SPECIFICATIONS
Springs: Copper alloy, in thicknesses ranging from .006" (0.15 mm) to .012" (0.30 mm).
Spacers: Rigid plastic is standard in thickness of .031" (.79 mm), .047" (1.19 mm) and .063" (1.60 mm).
Contacts: Fine silver or welded cross bar palladium are standard. Palladium or gold alloy are generally recommended for "dry" circuit applications. Other contacts available for varied customer requirements on special order.
Tubing: Thermoplastic.
Lifters: Thermoplastic.
Bracket: Steel, plated.
Mounting Hardware: Pressure plate, twin nut and screws: Steel, plated.

DIMENSIONS ARE FOR REFERENCE ONLY Inch (mm)

* Please visit the product pages on our website for the most up-to-date product information

GENERAL PURPOSE STACK SWITCHES (continued)

STACK SWITCH COMPONENT SPECIFICATIONS

1. SPRINGS - Copper alloy in most standard gauge thicknesses of .006" (0.15 mm), .008" (0.20 mm), .010" (0.25 mm), .012" (0.30 mm), .016" (0.40 mm) and .020" (0.50 mm), a few designs can be made up to .031" (.079 mm) thick. All or any contact point hole can be provided; spring can be cut at any point.

2. BRACKETS - Standard brackets are detailed on drawing. Tools are flexible so that various lengths from same width stock can be provided.

3. LIFTERS OR PUSHERS - .125" (3.18 mm) and .188" (4.78 mm) diameter thermoplastic in various lengths staked into one of the contact point holds provides tandem action between blades or to serve as an actuator.

4. MOUNTING HARDWARE - Pressure plates (S1293 and S2300) twin nuts (S1008 and S1431) and screws available for mounting.

5. LEAF INSULATORS - Punched in same shape as springs in .015" (0.38 mm) thickness of fish paper or mylar.

6. SPACERS - Rigid plastic is standard in thicknesses of .015" (0.38 mm), .032" (0.81 mm), .051" (1.30 mm) and .062" (1.57 mm). Thickness of .093" (2.36 mm) is available for .375" (9.52 mm) mounting centers only. For longer surface creepage paths, use both large and standard sized spacers. High temperature insulation also available.

7. THERMOPLASTIC TUBING - .375" (9.52 mm) mounting centers pass #5 screw. .250" (6.35 mm) mounting centers pass #3 screw. .188" (4.78 mm) mounting centers pass #2 screw.

8. CAM FOLLOWERS - Two roller bracket designs (G1734 and G2298) available for springs .250" (6.35 mm) wide. Copper alloy standard. Can be furnished in various diameters and materials. Thermoplastic rollers also available.

9. CONTACTS - Welded cross bar contacts are commonly used for cost savings. However, riveted contacts are available. Size and material depend on circuit requirements (supply complete details). For low level audio circuits, we suggest gold alloy or palladium cross bar contacts. Springs can be bifurcated (two contacts per spring).

TYPICAL STACK ASSEMBLY

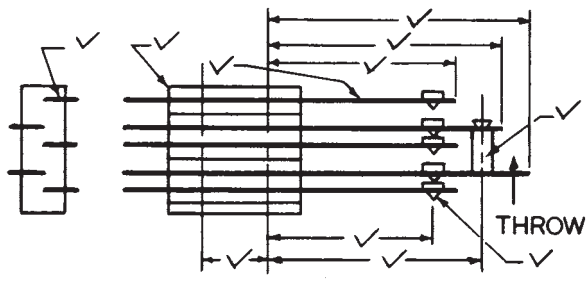

HOW TO ORDER STACK SWITCHES

Careful consideration of the following suggestions will help specify the most economical and expeditious approach to your switching needs. On initial inquiry or order, supply the following information:

1. Simple sketch or drawing. See “Typical Stack Assembly” drawing. Give details checked that are available.
2. Current, voltage and type of switching load (resistive or inductive).
3. Frequency of operation; life requirements.
4. Details of actuator.
5. Maximum and minimum movement of actuator blade.
6. Any other important specifying details.

It is recommended that data indicated above be forwarded to Switchcraft for comments and recommendations before finalizing your design.

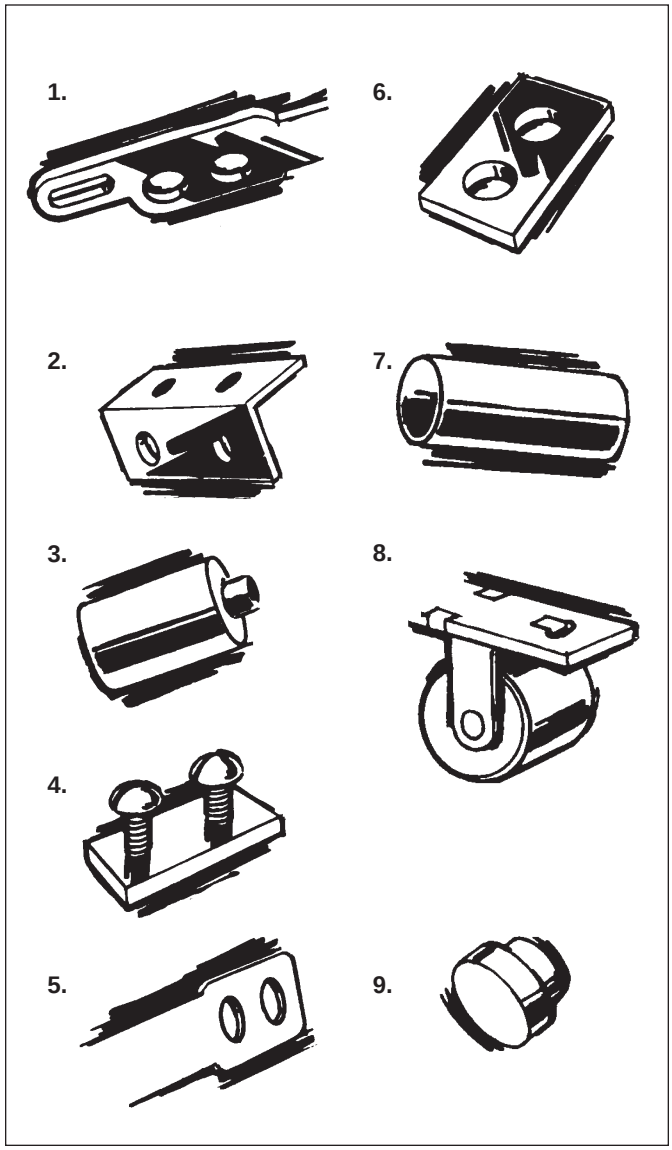

DIMENSIONS ARE FOR REFERENCE ONLY Inch (mm)

® Registered trademark of Switchcraft, Inc.
Note: Contact your Switchcraft Representative for price and delivery

* Please visit the product pages on our website for the most up-to-date product information

MULTIPLE STATION SWITCHES

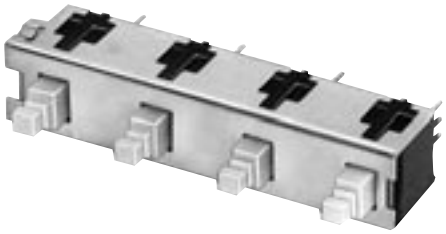

SERIES IBS

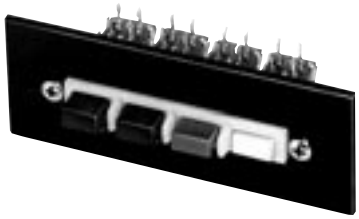

SERIES 65000
DW MULTI-SWITCH

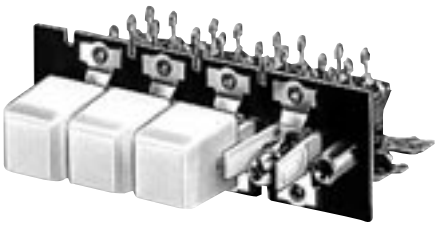

SERIES 66000, 67000
DW MULTI-SWITCH

FEATURES

Switches are designed to meet performance requirements of sophisticated equipment such as: analog and digital computers, analyzers, transmitters and receivers, intercoms, machine and process controls, ground support systems, scientific instruments and test measurement and instrumentation.

STANDARD MECHANICAL FUNCTIONS

INTERLOCK - actuating a button automatically restores to normal the button previously actuated. Lock-out feature, which prevents the mechanical operation of more than one button at a time, is standard on all interlock switches.

NON-LOCK - each button has momentary action. No interaction between buttons. Lock-out available on special order only.

ALL-LOCK - all buttons, except release, lock when depressed (accumulative lock). All buttons restored to normal by activating release button which has momentary action.

PUSH-LOCK/PUSH-RELEASE - pushbutton locks when depressed and is released when again depressed.

LOCK-UP - built-in, electrically operated solenoid locks all stations (in respective positions). Limited to operation of up to 12 stations only and energized from a remote position. Not available in push-lock/push-release.

SPECIAL ORDER MECHANICAL FUNCTIONS

Mechanical functions on selected series can be intermixed on the same frame on special order only. Contact factory for details and availability.

Multi-Switch switches have been designed to readily accommodate “special” functions at nominal cost. Special functions are described at right.

Intermixed functions - the following combinations of standard functions intermixed on the same frame are available:

- Interlock and Non-Lock
- Interlock and Push-Lock/Push-Release
- All-Lock and Non-Lock
- All-Lock and Push-Lock/Push-Release
- Push-Lock/Push-Release and Non-Lock

Lock-out function - Refer to above description under “Interlock.”

Push-release cancelling function - Speeds programming and reprogramming of equipment.

Momentary common release function - Permits one or more momentary common release stations on switch to facilitate special operating and release sequences.

“Split-interlock” function - Two separate groups of inter-lock stations on the same frame offers exceptional design latitude and reduces production line time.

GANGED ASSEMBLIES (Special Order)

Multiple row switching (ganged assemblies) with interaction between rows are available on special order. Space-saving ganged assemblies reduce production line assembly, wiring and testing time. All features of single row switching, including all standard and special features, are available. Contact Switchcraft for specifying assistance.

PUSHBUTTONS

Illuminated and non-illuminated switches can be specified with standard or special pushbuttons. See coverage on individual series for information.

LEGENDS

Legends can be supplied on illuminated and non-illuminated pushbuttons. Contact Switchcraft.

DIMENSIONS ARE FOR REFERENCE ONLY $\frac{\text{Inch}}{(\text{mm})}$

* Please visit the product pages on our website for the most up-to-date product information

MULTIPLE-STATION SWITCHES (continued)



SERIES 90000, 920000
TINI DW MULTI-SWITCH



SERIES 35000
LITTEL® MULTI-SWITCH



SERIES 37000, 38000
LITTEL® MULTI-SWITCH

CHOOSING THE RIGHT MULTIPLE-STATION SWITCH

Switch Series	Mechanical Functions[1]	Stations (Maximum)	Switching Per Station (Maximum)	Contact Rating[2]	Lighting	Accessories[3]
35000	ILO, N, A, PL/PR	18	6PDT	2A AC, 200W	No	C, G, M, P, S, PC/WW
36000	ILO, N, A, PL/PR	18	6PDT	2A AC, 200W	No	C, G, M, P, S, PC/WW, LWO
37000			4PDT		Yes	
38000			3PDT		Yes	
65000	ILO, N, A, PL/PR	18	4PDT	3A AC, 0.5A DC	No	C, G, M, S, PC/WW
66000	ILO, N, A, PL/PR	18	4PDT	3A AC, 0.5A DC	No	C, G, M, S, PC/WW
67000					Yes	
90000 **92000**	ILO, N, A	12 - ILO, A 18 - N, PL/PR	8PDT	0.5A 28V AC or DC	No	M
IBS	I, N	12	2PDT	.125A, 125 VAC or 28 VDC	No	P, M

1. I = interlock, ILO = interlock with lockout, N = non-lock (momentary), A = all-lock (special order), PL/PR = push-lock/push-release.
2. Non-inductive load.
3. C = optional switch contact, G = ganged assemblies, M = special/mixed functions, P = optional pushbuttons, S = solenoid release, PC/WW = PC and wire-wrapping terminals, LWO = lighting wiring options.

ORDERING

Order switches by part number in this section.
For any optional or special order feature, contact Switchcraft.

DIMENSIONS ARE FOR REFERENCE ONLY Inch (mm)

® Registered trademark of Switchcraft, Inc.
Note: Contact your Switchcraft Representative for price and delivery

* Please visit the product pages on our website for the most up-to-date product information

MULTIPLE-STATION SWITCHES (continued)

LITTEL® MULTI-SWITCH
SERIES 35000

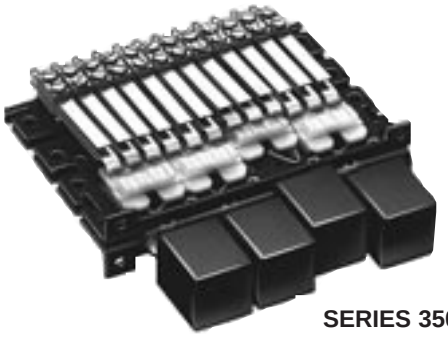

SERIES 35000

Specify 1 to 18 stations (non-illuminated) with a large selection of mechanical functions, choice of pushbuttons, and up to 6 poles of switching per station. Plungers are on .625" (15.88 mm) centers and are made from .050" (1.27 mm) x .187" (4.75 mm) steel. A square black pushbutton, A592, is supplied with each station. A wide variety of special mechanical functions, features and accessories are also available.

ORDERING INFORMATION
STANDARD SWITCHES
Order by part number from tables.

SPECIAL SWITCHES
Many special mechanical functions, features and accessories are available. Contact Switchcraft.

- Ganged Assemblies • Pushbuttons
- Special Mechanical Functions • Legends
- Switch Stacks • Accessories
- PC and Wire-Wrapping Terminals

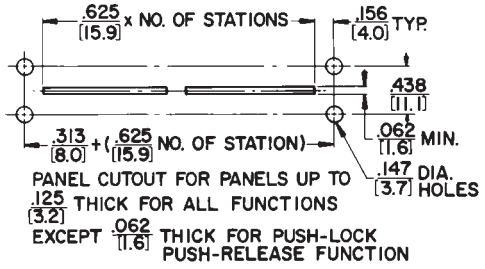

FIGURE A - PANEL CUTOUT FOR PLUNGER CLEARANCE ONLY

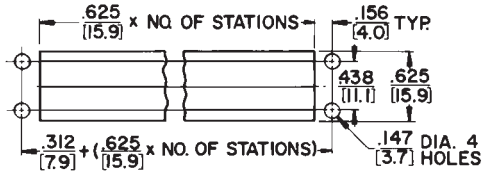

FIGURE B - PANEL CUTOUT FOR SERIES A590 PUSHBUTTON CLEARANCE ONLY

TYPICAL PANELS DIMENSIONS
SERIES 35000

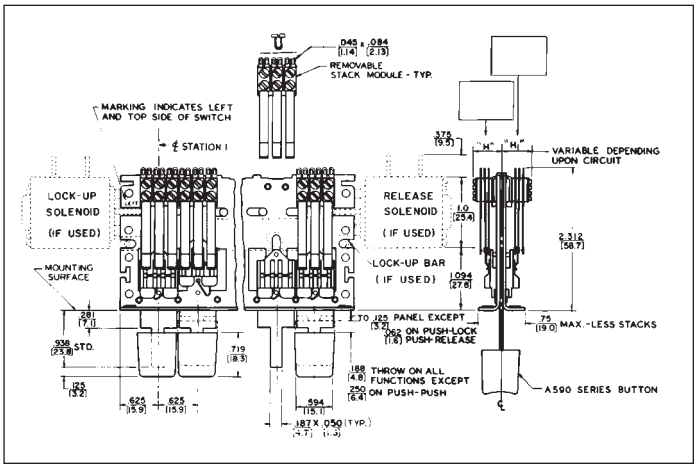

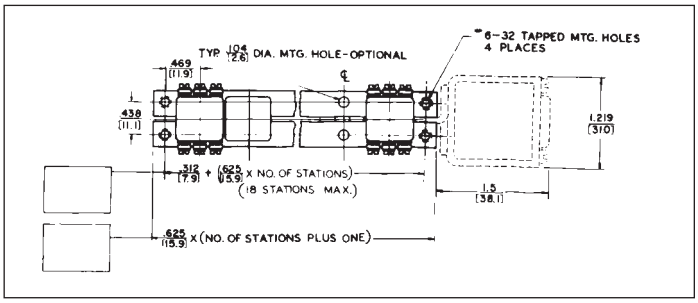

PART NUMBERS/2-C PER STATION[1]

Interlock with Lock-Out	Non-Lock	Push-Lock/ Push-Release	Number of Stations[2]
35021K206	◊35022206	◊35027206	2
35041K206	◊35042206	◊35047206	4
35061K206	◊35062206	◊35067206	6
35081K206	◊35082206	◊35087206	8
35101K206	◊35102206	◊35107206	10
35121K206	◊35122206	◊35127206	12

PART NUMBERS/4-C PER STATION[1]

◊35021K212	◊35022212	◊35027212	2
◊35041K212	◊35042212	◊35047212	4
◊35061K212	◊35062212	◊35067212	6
◊35081K212	◊35082212	◊35087212	8
◊35101K212	◊35102212	◊35107212	10
◊35121K212	◊35122212	◊35127212	12

1. Switches with all-lock function are available on special order. Contact Switchcraft.
2. Odd number of stations (3, 5, 7, 9, 11) are available. Switches with 13 through 18 stations are also available. Contact Switchcraft.

◊ Special order only; Contact Switchcraft for price and delivery information.

DIMENSIONS ARE FOR REFERENCE ONLY Inch (mm)

* Please visit the product pages on our website for the most up-to-date product information

MULTIPLE-STATION SWITCHES (continued)

LITTEL® MULTI-SWITCHES
SERIES 36000, 37000, 38000



SERIES 36000 - NON-ILLUMINATED



SERIES 37000 - SINGLE LAMP

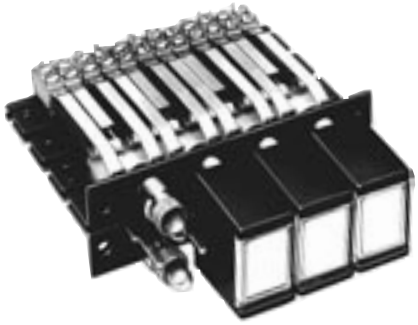

SERIES 38000 - TWIN LAMPS

SERIES 36000
Identical to Series 37000, except non-illuminated. Pushbuttons match Series 37000 and 38000 Switching up to 6PDT.

SERIES 37000
Same as Series 35000, but features large, rectangular face pushbuttons, illuminated by one lamp and having large legend area. Switching is up to 4PDT. Switch stations are on .625" (15.88 mm) centers, and depth behind panel is 2.313" (58.75 mm). Black pushbutton housings have white translucent inserts, white legend insert, two support inserts, and transparent display screen. Other pushbuttons and combinations are possible; see pages 316 and 317.

On 2-C per station switches, each station includes two, 83P switch stacks and one H83P lighting stack, and one convenience lighting spring. Contact ratings: 2A, 200W maximum AC non-inductive load.

On 4-C per station switches, each station has 4, 83P switch stacks, one H83P lighting stack, and one convenience lighting spring. “L” and “M” lighting arrangements can be effected by wiring directly to the H83P and H lighting stacks.

Each switch station uses an industry standard T 1-3/4 lamp (not supplied). Special features such as ganged assemblies, solenoid release, and T-1 lamp adapter are available; contact Switchcraft. See pages 316 and 317 for special effects display screen and inserts.

SERIES 38000
Similar to Series 37000, except features twin lamp illumination at each station for redundant or 2-color, split-face (alternate) lighting.

On 2-C per station switches, each station includes 3, H83P lighting switch stacks and 1 lighting spring. This provides up to 3PDT circuitry (1 pole is needed for lighting lamps; lamps not supplied). Contact ratings: 2A, 200W maximum AC non-inductive load.

On 4-C per station switches, each station has three, H83P, two, 83P switching stacks and one lighting spring. This offers 5PDT circuitry (1 pole is required for lighting lamps). two, T 1-3/4 lamps per station are used (lamps are not supplied). Ganged assemblies and solenoid releases are available; contact Switchcraft. See pages 316 and 317 for special effects display screens and inserts.

LIGHTING
Series 37000 and 38000 can be used in control systems where the light is either “ON”, or “OFF” or permanently “ON”.

One or any combination of the three lighting arrangements listed below can be specified on a switch. NOTE: Standard switches ordered from tables can be wired for “L”, “M” or “N” type lighting.

TYPE	DESCRIPTION
“L”	Pushbuttons light in the “IN” position.
“M”	Pushbuttons light in the “OUT” position.
“N”	Pushbuttons light in the “IN” and “OUT” positions.

ORDERING
STANDARD SWITCHES
Order by part number from tables.

SPECIAL SWITCHES
Many special mechanical functions, features and accessories are available. Contact Switchcraft for special order items.
- Ganged Assemblies • Special Mechanical Functions
- Special Color Displays • Pushbuttons
- Legends • Switch Stacks
- Wiring Lighting Options • PC and Wire-wrapping Terminals
- Accessories

DIMENSIONS ARE FOR REFERENCE ONLY Inch (mm)

® Registered trademark of Switchcraft, Inc.
Note: Contact your Switchcraft Representative for price and delivery

* Please visit the product pages on our website for the most up-to-date product information

MULTIPLE-STATION SWITCHES (continued)

LITTEL® MULTI-SWITCHES
SERIES 36000, 37000, 38000 (continued)

SERIES 37000

PART NUMBERS / 2-C PER STATION[1]

Interlock with Lock-Out	Non-Lock	Push-Lock/ Push-Release	Number of Stations[2]
◊37021K1206	◊370221206	◊370271206	2
◊37041K1206	◊370421206	◊370471206	4
◊37061K1206	◊370621206	◊370671206	6
◊37081K1206	◊370821206	◊370871206	8
◊37101K1206	◊371021206	◊371071206	10
◊37121K1206	◊371221206	◊371271206	12

PART NUMBERS / 4-C PER STATION[1]

◊37021K1212	◊370221212	◊370271212	2
◊37041K1212	◊370421212	◊370471212	4
◊37061K1212	◊370621212	◊370671212	6
◊37081K1212	◊370821212	◊370871212	8
◊37101K1212	◊371021212	◊371071212	10
◊37121K1212	◊371221212	◊371271212	12

1. Switches with all-lock function are available on special order. Contact Switchcraft.
2. Odd number of stations (3, 5, 7, 9, 11) are available. Switches with 13 through 18 stations also available. Contact Switchcraft.

◊ Special order only; Contact Switchcraft for price and delivery information.

SERIES 38000

PART NUMBERS / 2-C PER STATION[1]

Interlock with Lock-Out	Non-Lock	Push-Lock/ Push-Release	Number of Stations[2]
◊38021K1206	◊380221206	◊380271206	2
◊38041K1206	◊380421206	◊380471206	4
◊38061K1206	◊380621206	◊380671206	6
◊38081K1206	◊380821206	◊380871206	8
◊38101K1206	◊381021206	◊381071206	10
◊38121K1206	◊381221206	◊381271206	12

PART NUMBERS / 4-C PER STATION[1]

◊38021K1212	◊380221212	◊380271212	2
◊38041K1212	◊380421212	◊380471212	4
◊38061K1212	◊380621212	◊380671212	6
◊38081K1212	◊380821212	◊380871212	8
◊38101K1212	◊381021212	◊381071212	10
◊38121K1212	◊381221212	◊381271212	12

1. Switches with all-lock function are available on special order. Contact Switchcraft.
2. Odd number of stations (3, 5, 7, 9, 11) are available. Switches with 13 through 18 stations also available. Contact Switchcraft.

◊ Special order only; Contact Switchcraft for price and delivery information.

TYPICAL PANEL OPENING

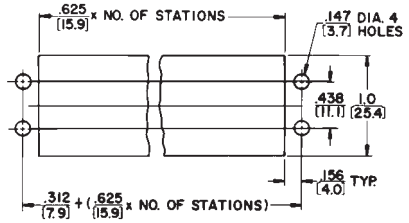

MATERIAL SPECIFICATIONS

Frame: Steel, dry film lubricant.
Plungers, Stack Switch Mounting Brackets and Screws: Steel, plated.
Stack Switches: Stack switch springs are made of copper alloy. Solder lugs are hot tin-dipped.
Insulation: Stack switches: rigid plastic spacers with plastic tubing through stack.
Lifters: Thermoplastic.

SERIES 37000, 38000

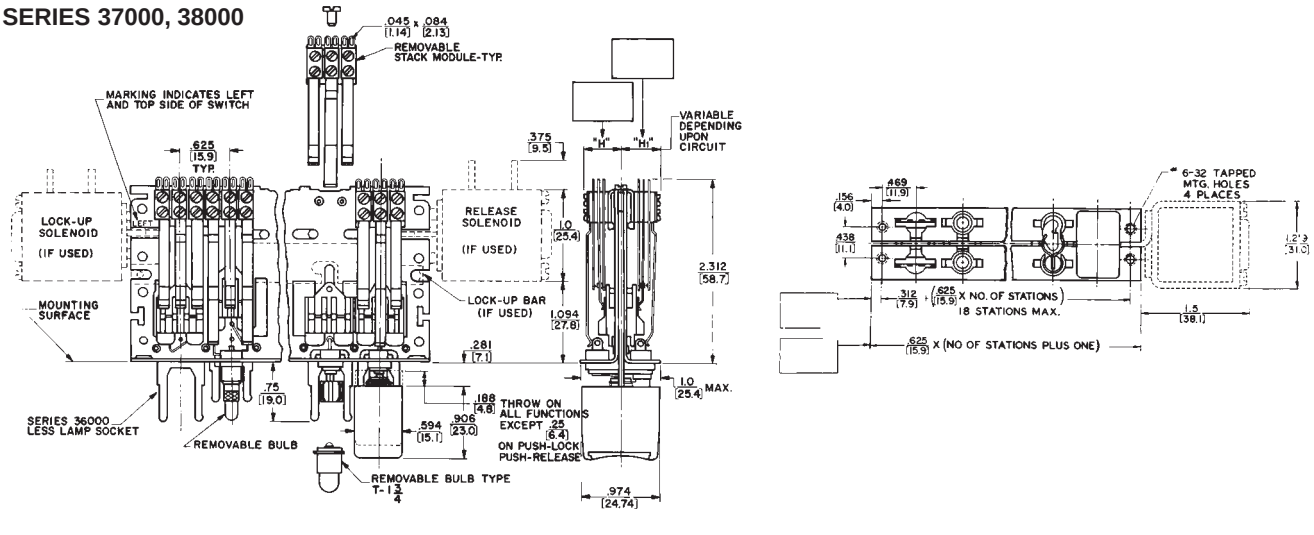

DIMENSIONS ARE FOR REFERENCE ONLY Inch (mm)

* Please visit the product pages on our website for the most up-to-date product information

MULTIPLE-STATION SWITCHES (continued)

SPECIAL EFFECTS COLOR DISPLAY SCREENS AND INSERTS

Display screens and inserts are offered in a wide choice of colors for SERIES 37000 and 38000 Littel Multi-Switch switches. Display screens with high-lights are useful in high ambient lighting; or display screens with soft, uniform, and diffused lighting for use under low ambient lighting conditions. Order display screens, inserts and filters separately. See Part Number Chart below.

A **Series 401 Display Screen**

B **Series 404**
Legend insert recesses into display screen. Omit when split-face inserts are used.
Part Number 404 05
White legend insert has a matte finish on one side suitable for in-the-field marking.

C **Part Number 404 12 Retaining Insert**
Clear insert snaps into display screen from rear to retain legend inserts. Omit when split-face inserts are used.

D **Series 407 Split-Face Insert**
Use with Series 38000

E **Series 402 Color Filter Inserts**
White insert used with blue, white and clear display screens; clear insert used with red, green and yellow. All color filters are omitted where split-face insert is used.

F **Part Number 402 12 Heat Shield Insert**
Clear filter insert snaps into push-button housing. Must be used in every pushbutton assembly.

G **Part Number 406**
Light Divider Recesses into pushbutton housing. For use with Series 38000.

H **Series 405 02 Pushbutton Housing.**

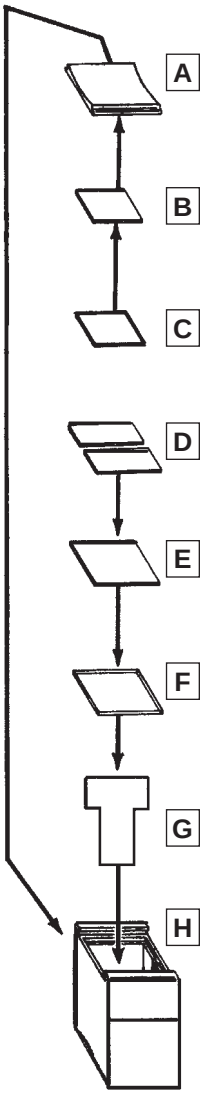

SERIES 401 DISPLAY SCREENS – Display screens with contoured face give a better operation "feel". Rectangular shape provides greater area for engraving legends and symbols. Entire screen is illuminated by single or twin lamp indication. Various brightness and color combinations are possible by use of legend filter and split face inserts.

SERIES 404 LEGEND INSERTS – Small translucent inserts provide special color effects. White colored insert (40405) has a special matte surface for in-the-field identification with ink, pencil or lettering transfers. Special color effects can be accomplished with combination of a colored insert with a clear display screen. IMPORTANT: Order legend insert (40412) with every pushbutton.

SERIES 407 SPLIT-FACE INSERTS – Split-face inserts provide separate control or indicating functions through the use of color. Ideal for use on Series 38000 Littel Multi-Switch switches where each pushbutton can serve as two indicator lights. Up to two lamps can be used per display screen which are split lengthwise by 2-color split-face inserts. Inserts may be hot-stamped. Order (406) light divider when "flip-flop" lighting is specified; or for redundant lighting where a definite visual indication of lamp failure is desired. A frequently used combination is red and green. Red might indicate danger, stop, etc. Green, go, "okay", etc. IMPORTANT: Use (40212) clear insert with a split-face insert.

SERIES 402 FILTER INSERTS – Inserts add greater color definition. Ideal for use under low ambient lighting conditions where brightness of illuminated pushbuttons must be minimized. A white filter insert (40205) is useful in cutting down the brightness of a white color insert and a white or clear display screen. However, it is omitted when color display screen is used. Filters also diffuse light evenly over entire face of display screen with no "hot spots" or darkened corners. IMPORTANT: Order clear insert (40212) for use with every color filter insert. Clear insert snaps in button housing behind a color filter insert and serves as a heat shield.

406 LIGHT DIVIDER – A light divider is used in the standard pushbutton housing to separate the illumination from the twin lamps used in the Series 38000 Littel Multi-Switch switches. Order a light divider for every pushbutton station in the Series 38000 where split-face lighting has been specified.

Series 405 PUSHBUTTON HOUSINGS – One-piece housing for all 37000 and 38000 switches. Accepts Series 401, 402, 404, 406 and 407 components. Standard color is black. Other colors available.

ORDERING – For variations in pushbutton configurations, contact Switchcraft.

Part No.	Figure	Color
◊40101	A	Red
◊40103		Green
◊40104		Blue
◊40105		White
◊40108		Yellow
◊40112		Clear
◊40116		"Black Screen"
◊40401	B	Red

◊ Special order only; Contact Switchcraft for price and delivery information.

Part No.	Figure	Color
◊40403	B	Green
◊40404		Blue
◊40405		White
◊40408		Yellow
◊40412	C	Clear (retaining insert)
◊40201	E	Red
◊40203		Green
◊40204		Blue
◊40205		White

Part No.	Figure	Color
◊40208	E	Yellow
◊40212	F	Clear (heat shield insert)
◊40701	D	Red
◊40703		Green
◊40704		Blue
◊40705		White
◊40708		Yellow
◊406	G	White (light divider)
40502	H	Black (housing)
40505		White

DIMENSIONS ARE FOR REFERENCE ONLY Inch (mm)

® Registered trademark of Switchcraft, Inc.
Note: Contact your Switchcraft Representative for price and delivery

* Please visit the product pages on our website for the most up-to-date product information

MULTIPLE-STATION SWITCHES (continued)

LITTEL® MULTI-SWITCH ACCESSORIES

Series 60BG Bifurcated Switch Stacks

Special Mounting Bracket

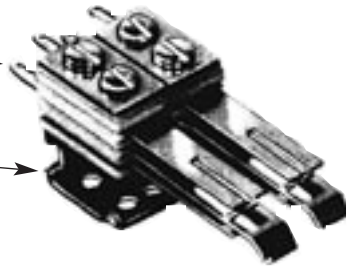

Series 80P Stacks

Mounting Bracket

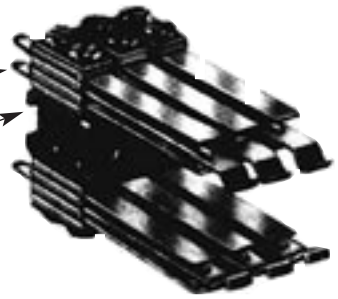

"TINI-STACK" SWITCHES

Many combinations of stack switches are available on special order. Contact Switchcraft for specifying assistance, including clearances for stack heights.

SERIES 80P - Crossbar welded palladium contacts rated: 2A, 200W maximum, AC non-inductive load. For use where contacts of a released station will return to normal before contacts of a newly operated station are actuated. Not recommended for use on push-lock/push/release function.

SERIES 800P - Same as Series 80P but can be used on push-lock/push-release function, or on other functions where contacts of a newly operated station must be actuated before contacts of a released station return to normal.

SERIES 80G - Same as Series 80P, except includes cross-bar welded gold alloy contacts rated at 1A, 100W maximum, AC non-inductive load.

SERIES 800G - Same as Series 80G except for push-lock/push-release and/or other functions as described for Series 800P.

BIFURCATED "TINI-STACK" SWITCH STACKS

Double reliability through use of bifurcated switch stacks featuring bifurcated leaf springs slotted at the contact end and parallel to the long axis of the leaf spring. Separate crossbar gold alloy contacts are welded to leaf springs on each side, doubling the number of contacts on each spring.

SERIES 60BG - Similar to Series 80P, except bifurcated leaf springs with welded crossbar gold alloy contacts rated at 1A, 100W maximum, AC non-inductive load.

SERIES 600BG - Same as Series 60BG, except for use on push-lock/push-release function and/or functions as described under Series 800P.

HIGH CURRENT "TINI-STACK" SWITCH STACKS

Heavy duty switch stacks Series 60W for use in 120V, AC power circuits are available with large, fine silver contacts rated at 5A, non-inductive load. Stack spacer width limits mounting to one stack/station on each side of frame and requires special mounting bracket.
For 10 and 15A switching, contact Switchcraft.

POSITIONING SWITCH STACKS (SERIES 80P, 800P, 80G AND 800G ONLY)

Refer to chart below for proper balancing of the switch stacks mechanical load at each station, "X" denotes correct positioning of the stack on the removable switch stack bracket.

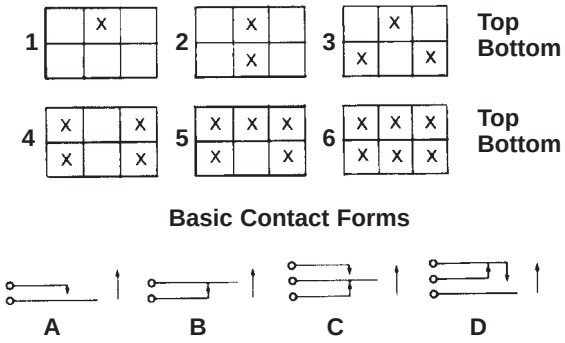

Basic Contact Forms

Other contact forms available on special order

SERIES NJ SOLENOID RELEASE

Solenoid assembly attaches to end of switch frame and provides electrical release of activated stations. Instructions and hardware furnished. Other voltages are available on special order; contact Switchcraft.

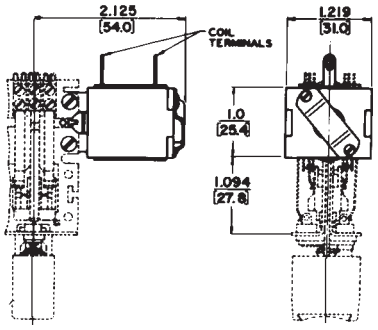

TYPICAL MOUNTING

DIMENSIONS ARE FOR REFERENCE ONLY Inch (mm)

* Please visit the product pages on our website for the most up-to-date product information

MULTIPLE-STATION SWITCHES (continued)

LITTEL® MULTI-SWITCH ACCESSORIES

WIRE-WRAPPING TERMINALS

Special order wire-wrapping terminals optimize use of semi-automated termination equipment to save production line time. Terminal shoulders accommodate 1, 2 or 3 wrapped connections per terminal and prevent wrapping tool from "bottoming" (on first wrapped connection) and possibly shorting against other metal parts on switch stack. 4-C switching per station maximum.

NOTE: Stack height dimension will be greater when wire-wrapping terminals are specified. Stack height for 1-A and 1-B circuit is .516" (13.11 mm). For 1-C height is .594" (15.09 mm).

ORDERING: Contact Switchcraft for details.

RECOMMENDED WIRE-WRAPPING TOOLS

	(Gardner -Denver Co. Part Numbers)	
Wire Gauge	**Wrapping Bit**	**Sleeve**
#22 & #24	500131	18840
#25	500131	18840
#26	37006	17611-2

RECOMMENDED WIRE-WRAPPING PARAMETERS

Wire Gauge	Number of Connections	Wraps Per Connection	Wire Gauge	Number of Connections	Wraps Per Connection
#22	3	4	#25	3	4
#24	3	5	#26	3	5

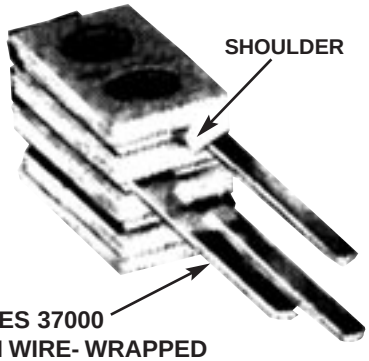

SERIES 37000
WITH WIRE- WRAPPED
TERMINALS

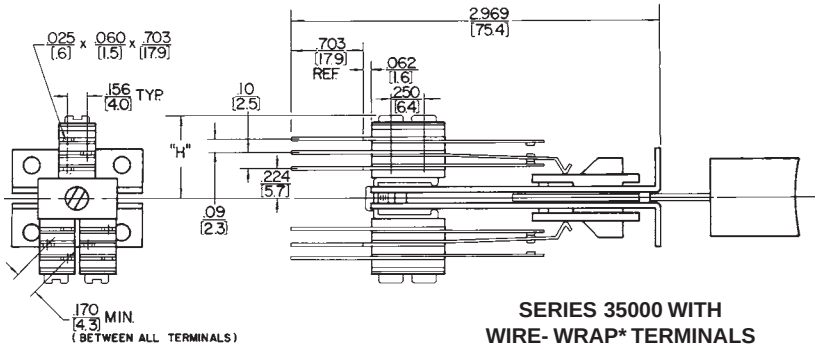

SERIES 35000 WITH
WIRE- WRAP* TERMINALS

* Registered trademark of Gardner-Denver Co.

LAMP SOCKETS AND ADAPTERS

LAMP SOCKET T10 ◊

Standard on Series 37000, T10 accepts standard midget flange type T1-3/4 lamps.

LAMP SOCKET T12 ◊

Standard on Series 38000, the T12 socket accepts standard midget flange type T1-3/4 lamps.

LAMP ADAPTER T1

Converts sockets that accommodate standard T 1-3/4, (P1593) midget flange base lamps to accept T 1 subminiature lamps. Adapter fits T 1-3/4 lamp socket. The 2-piece adapter holds lamp securely in place to assure positive contact of lamp circuit in most environments. If you require extra long-life, specify a T 1 lamp adapter for each T 1-3/4 socket.

PC TERMINALS

Copper alloy PC terminals are integral with associated leaf spring and feature shoulders for proper clearance from PC board and for solid mounting. Contact Switchcraft for details.

◊ Available on special order only; Contact factory for price and delivery information.

LAMP SOCKET T12

LAMP ADAPTER T1

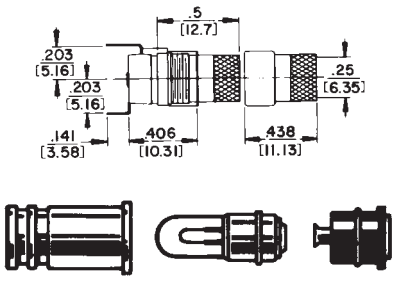

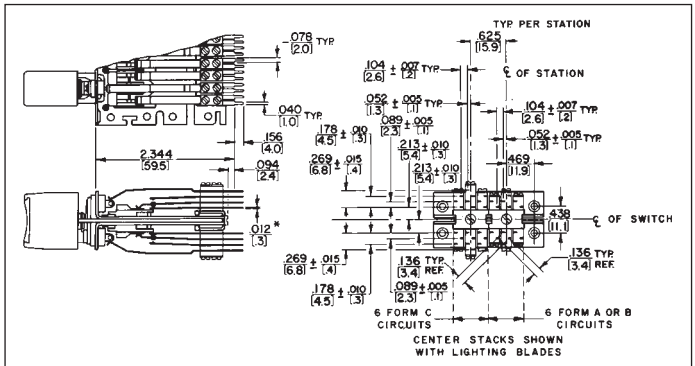

SERIES 37000 WITH PC TERMINALS

DIMENSIONS ARE FOR REFERENCE ONLY Inch / (mm)

® Registered trademark of Switchcraft, Inc.
Note: Contact your Switchcraft Representative for price and delivery

* Please visit the product pages on our website for the most up-to-date product information

MULTIPLE-STATION SWITCHES (continued)

DW MULTI-SWITCH
SERIES 65000

Available with up to 18 non-illuminated stations in a single row. Maximum switching per station is 4-C (4PDT). Contacts are rated: 3A, AC, 0.5A DC, 125V, non-inductive load. Integral black button is supplied with each station. Switches mount with #6 screws and nut (not furnished). Contact Switchcraft for special assemblies, with ganged assemblies, solenoid release, PC or wire-wrapping terminals, or escutcheon modules.

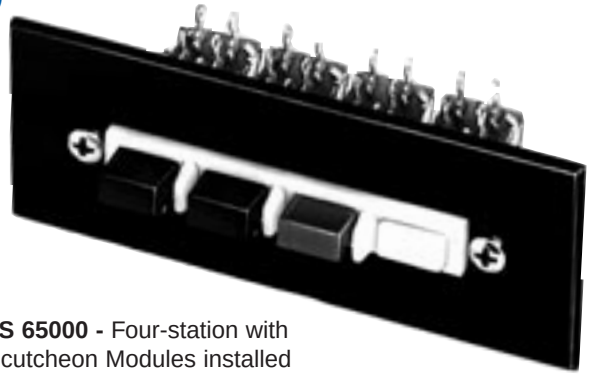

SERIES 65000 - Four-station with DW Escutcheon Modules installed

PART NUMBERS / 2-C PER STATION[1]

Interlock with Lock-Out	Non-Lock	Push-Lock/ Push-Release	Number of Stations[2]
65021K206	◊65022206	◊65027206	2
65041K206	◊65042206	◊65047206	4
65061K206	◊65062206	◊65067206	6
65081K206	◊65082206	◊65087206	8
65101K206	◊65102206	◊65107206	10
65121K206	◊65122206	◊65127206	12

1. Switches with all-lock function are available on special order. Contact Switchcraft.
2. Odd number of stations (3, 5, 7, 9, 11) are available. Switches with 13 through 18 stations also available. Contact Switchcraft.

◊ Special order only; Contact Switchcraft for price and delivery information.

PART NUMBERS / 4-C PER STATION[1]

Interlock with Lock-Out	Non-Lock	Push-Lock/ Push-Release	Number of Stations[2]
◊65021K212	◊65022212	◊65027212	2
◊65041K212	◊65042212	◊65047212	4
◊65061K212	◊65062212	◊65067212	6
◊65081K212	◊65082212	◊65087212	8
◊65101K212	◊65102212	◊65107212	10
◊65121K212	◊65122212	◊65127212	12

1. Switches with all-lock function are available on special order. Contact Switchcraft.
2. Odd number of stations (3, 5, 7, 9, 11) are available. Switches with 13 through 18 stations also available. Contact Switchcraft.

◊ Special order only; Contact Switchcraft for price and delivery information.

PANEL CUTOUT DIMENSIONS

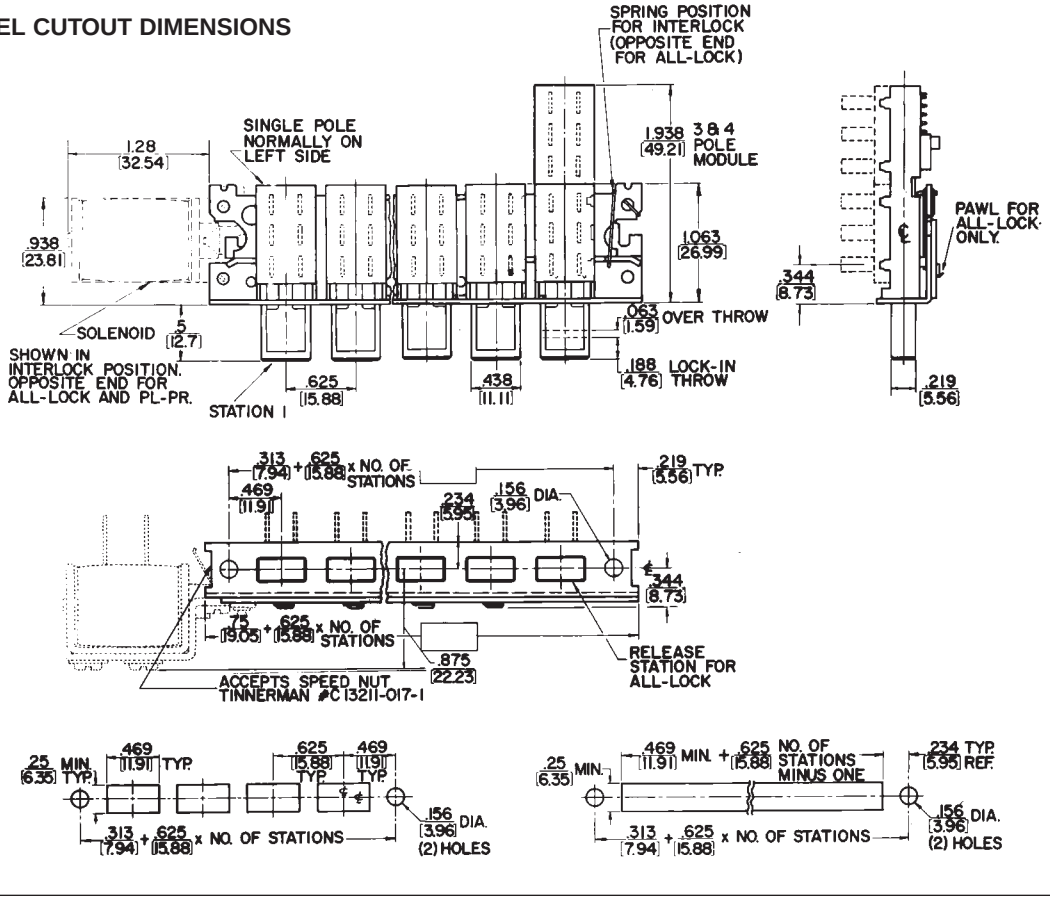

DIMENSIONS ARE FOR REFERENCE ONLY Inch (mm)

* Please visit the product pages on our website for the most up-to-date product information

MULTIPLE-STATION SWITCHES (continued)

DW MULTI-SWITCH
SERIES 66000 and 67000

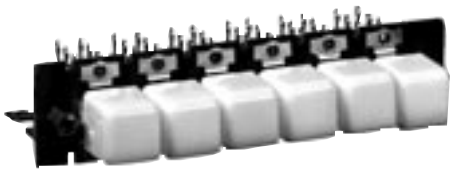

Series 66000 (non-illuminated) and 67000 (illuminated) can be supplied with up to 18 stations, including a square white pushbutton Part Number DW305 at each station. Contacts and ratings are the same as for Series 65000. Lamp sockets (67000) at each station accept 6V to 28V T 1-3/4 flange base lamps (not supplied). Mounts with 2 #6-32 machine screws (not supplied). See page 310 for pushbutton data. Accessories include solenoid release, ganged assemblies, T1 lamp adapter, and metal barriers (between stations). PC and wire-wrapping terminals are also available. Contact Switchcraft.

NON-ILLUMINATED DW MULTI-SWITCH SWITCHES
Switchcraft offers DW Multi-Switch switches, Series 70000 and 71000 with crossbar plungers which accept a wide variety of Switchcraft and industry pushbuttons. Contact Switchcraft for specifying assistance.

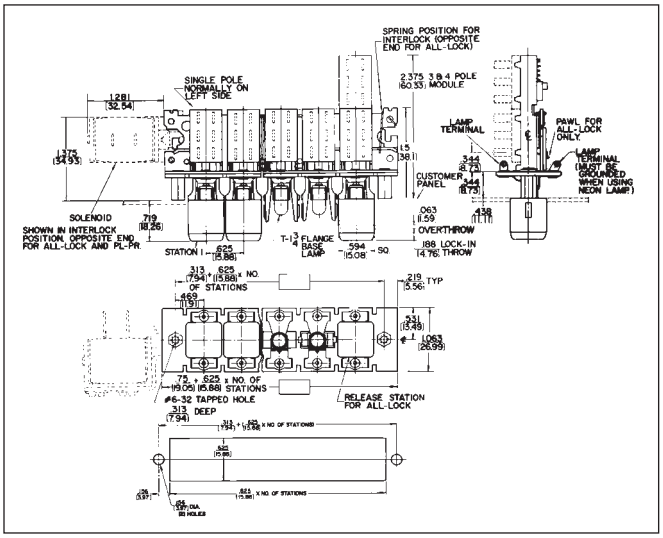

SERIES DW40 COLOR INSERTS
Many unusual lighting effects can be created using DW40 color inserts. Molded from dimensionally stable, high-temperature plastic in six standard colors, inserts slip into standard Series DW300 pushbuttons providing unusual latitude in custom designing color and legend effects. With no wear from finger-tips, legend life is virtually unlimited.

Part No.	Color	Part No.	Color	Part No.	Color
◊DW41	Red	◊DW44	Blue	◊DW47	Orange
◊DW43	Green	DW45	White	◊DW48	Yellow

◊ Special order only; Contact Switchcraft for price and delivery information.

SERIES DW300 PUSHBUTTONS (DW305 supplied standard)

Part No.	Color[1]	Part No.	Color[1]	Part No.	Color[1]
DW301	Red	DW304	Blue	DW312	Clear
DW302	Black	DW305	White	DW313	Amber
DW303	Green	DW308	Yellow	DW316	"Black-Screen"

1 Other colors available on special order. Buttons are 0.594 (15.09) x 0.594 (15.09)

PART NUMBERS/2-C PER STATION[1]

Interlock with Lock-Out	Non-Lock	Push-Lock/ Push-Release	Number of Stations[2]
67021K506	◊67022506	◊67027506	2
67041K506	◊67042506	◊67047506	4
67061K506	◊67062506	◊67067506	6
67081K506	◊67082506	◊67087506	8
67101K506	◊67102506	◊67107506	10
67121K506	◊67122506	◊67127506	12

PART NUMBERS/4-C PER STATION[1]

◊67021K512	◊67022512	◊67027512	2
◊67041K512	◊67042512	◊67047512	4
◊67061K512	◊67062512	◊67067512	6
◊67081K512	◊67082512	◊67087512	8
◊67101K512	◊67102512	◊67107512	10
◊67121K512	◊67122512	◊67127512	12

1. Switches with all-lock function are available on special order. Contact Switchcraft.
2. Odd number of stations (3, 5, 7, 9, 11) are available. Switches with 13 through 18 stations also available. Contact Switchcraft.

◊ Special order only; Contact Switchcraft for price and delivery information.

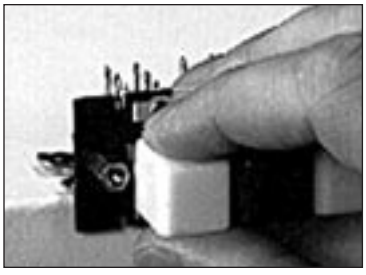

Squeeze upper and lower surfaces of pushbutton and pull free of plungers.

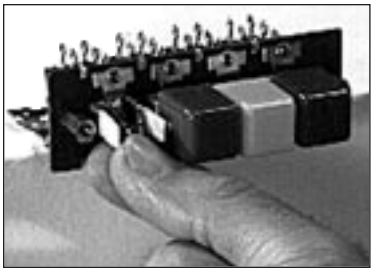

Next, grasp lamp with lamp removal tool or fingertips and snap-out. Replace lamp and pushbutton. Finished in seconds!

DIMENSIONS ARE FOR REFERENCE ONLY Inch (mm)

® Registered trademark of Switchcraft, Inc.
Note: Contact your Switchcraft Representative for price and delivery

* Please visit the product pages on our website for the most up-to-date product information

MULTIPLE-STATION SWITCHES (continued)

DW MULTI-SWITCH ACCESSORIES

ESCUTCHEON MODULES, SERIES DW100 AND DW200

Modules are available in colors to match or contrast with Series 65000 pushbutton colors. Modules are simply slipped over the pushbuttons before the switch is mounted on the panel. Flanges on modules overlap the panel cutout and hold modules securely in place while adding only 0.02" (.051 mm) behind panel space.

One module is required for each station. Installation of the Series DW200 Modules (with barrier) is equally simple. First, place one Series DW100 Module over the pushbutton actuator on one end of the row. On the adjacent actuator, place a Series DW200 Module. Position this module so that the barrier overlaps the edge of the Series DW100 Module. Install the remaining Series DW200 modules in the same manner, with the barriers overlapping. The completed escutcheon will have barriers between adjacent pushbutton actuators, but no barriers at the ends of the rows.

Series DW-100 (without barrier)	Series DW-200 (with barrier)	Color*
◊DW101	◊DW201	Red
DW102	DW202	Black
DW05	DW205	White

* Other colors available on special order.
◊ Special order only; Contact Switchcraft for price and delivery information.

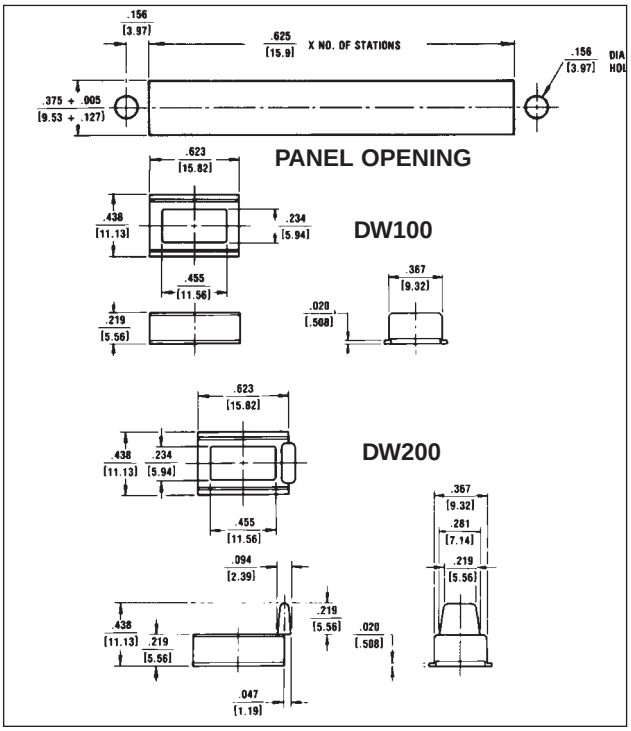



SPECIAL SWITCHING FORMS

In addition to 2-C and 4-C switching, other circuit forms can be supplied on special order. They are: 1-A, 2-A, 3-A, 4-A, 1-B, 2-B, 3-B, 4-B, 1-C, 3-C, 1-D, 2-D, 3-D, and 4-D.

BARRIERS (SERIES 67000 ONLY)

As an option, (field installable) barriers can be specified and installed. Sturdy wire barriers fit between pushbuttons and prevent accidental simultaneous actuation of adjacent push-buttons. When a pushbutton is depressed, the fingertip is guided away from adjacent pushbuttons, and all pressure is applied to the correct pushbutton.

Switchcraft Part Number ◊P2359 Barriers (package of 25)

SOLENOID RELEASE

Solenoids provide electromechanical assistance in releasing locked switch stations in switches with up to 12 stations. Release can be effected from a local or remote position. Solenoids are available for use with switches having inter-lock, all-lock, or push-lock/push-release mechanical functions. All solenoids are "pull-type". When ordered separately, solenoids are supplied with all mounting hardware. Brass terminals accept "push-on" type clips (ARK-LES #3500M20C), or wiring can be soldered directly to the lugs.

SPECIFICATIONS

Frame, Latch Bar, and Switch Housing: Steel, plated.
Mounting Studs (Series 66000 and 67000):
Same as frame above.
Pushbutton Actuators (Series 65000): Molded thermoplastic.
Pushbuttons (Series 66000 and 67000):
Molded thermoplastic.
Terminals: Copper alloy, silver-plated.
Contactors: Copper alloy, plated.
Terminal Board: Rigid plastic.
Lamp Socket (Series 67000): Copper alloy, plated.

Part Number	Switch Function	Mounting*	Voltage	Coil Res. (Ohms)	Duty Cycle
◊DW1	Interlock	Left	115 AC, 60 Hz	361	20%
◊DW3	All-Lock	Right	115 AC, 60 Hz	130	10%
◊DW4	Interlock	Left	24 DC	14.2	20%
◊DW7	All-Lock or Push-Lock/Push-Release	Right	24 DC	8.96	10%

* Direction indicates side of switch frame solenoid is mounted on (solenoid terminals up).

DIMENSIONS ARE FOR REFERENCE ONLY Inch (mm)

* Please visit the product pages on our website for the most up-to-date product information

MULTIPLE-STATION SWITCHES (continued)

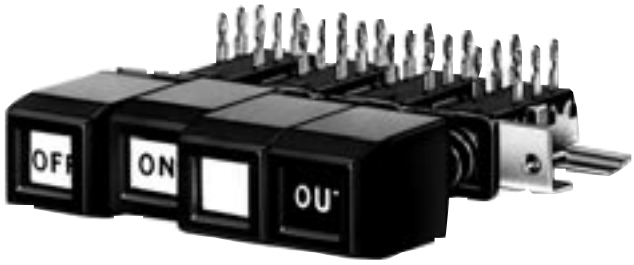

SERIES 92000 Switch TDW-F
Flip-Flop Pushbutton Installed

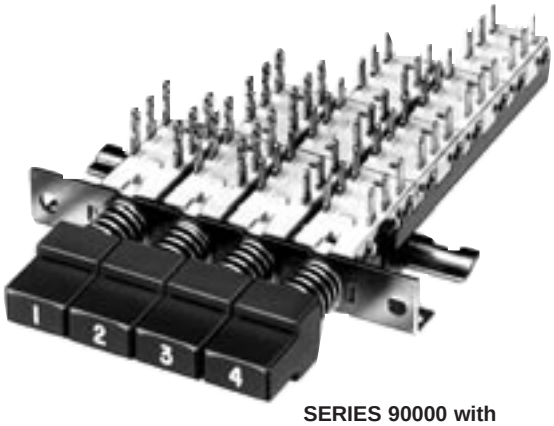

SERIES 90000 with
A-650 Pushbuttons Installed

TINI® DW MULTI-SWITCH – SERIES 90000, 92000

Subminiature, multiple station switches have pushbuttons on 0.394" (10mm), 0.590" (15mm), or 0.787" (20mm) centers. Four mechanical functions: Interlock, Non-Lock, All-Lock and Push-Lock/Push-Release. Switches mount in panels up to .343" (8.71mm) thick. Switching per station is 2-C (2PDT), 4-C (4PDT), 6-C (6PDT) or 8-C (8PDT). Contact ratings: 0.5A, 28V AC or DC non-inductive. Solder lug or PC terminals.

SERIES 90000 - Up to 18 stations on 0.394" (10mm) centers in a row. Switch mounts with 2, #3 screws (not supplied).

SERIES 92000 - 15mm station centers. Wider spacing permits mounting Series TDWF pushbuttons.

SPECIFICATIONS

ELECTRICAL

Switching Module Rating: 0.5A, 28V AC or DC non-inductive load.
Initial Contact Resistance: 10 milliohms.

MATERIALS

Frame Switch Housing: Steel, plated.
Latch Bar: Stainless steel on all-lock function; zinc alloy on interlock function.
Latch Bar Return Spring: Tinned music wire.
Plunger: Molded thermoplastic.
Plunger Return Spring: Tinned music wire.
Terminals/Contacts: Copper alloy, silver-plated.
Contact Sliders: Bifurcated bimetal (silver on copper alloy).
Terminal Board: Molded thermoplastic (UL 94V-0).
Pushbuttons: Molded thermoplastic.

PUSHBUTTONS

Part Number	Color	Part Number	Color
◊A6501	Red	◊A6504	Blue
◊A6502	Black	◊A6505	White
◊A6503	Green	◊A6508	Yellow

Buttons are 0.386 (9.80 mm) x 0.386 (9.80 mm).
◊ Special order only; Contact Switchcraft for price and delivery information.

Pushbuttons for Tini DW Multi-Switch switches must be specified separately, below. Refer to page 316 for data on TWDF pushbuttons.

Series A650 pushbuttons can be specified for both Series 90000 and 92000. Legends can be specified; contact Switchcraft.

PART NUMBERS/2-C PER STATION[1]

Interlock with Lock-Out	Non-Lock	Push-Lock/ Push-Release	Number of Stations[2]
◊90024B06	◊90022B06	◊90027B06	2
◊90044B06	◊90042B06	◊90047B06	4
◊90064B06	◊90062B06	◊90067B06	6
◊90084B06	◊90082B06	◊90087B06	8
◊90104B06	◊90102B06	◊90117B06	10
◊90124B06	◊90122B06	◊90127B06	12

PART NUMBERS/4-C PER STATION[1]

◊90024B12	◊90022B12	◊90027B12	2
◊90044B12	◊90042B12	◊90047B12	4
◊90064B12	◊90062B12	◊90067B12	6
◊90084B12	◊90082B12	◊90087B12	8
◊90104B12	◊90102B12	◊90117B12	10
◊90124B12	◊90122B12	◊90127B12	12

1 Switches with all-lock function are available on special order. Contact Switchcraft.
2 Odd number of stations (3, 5, 7, 9, 11) are available. Switches with 13 through 18 stations also available. Contact Switchcraft.
◊ Special order only; Contact Switchcraft for price and delivery information.

SPECIFYING NOTE:

Series 90000 Part Numbers are given in table. To order Series 92000 switches, substitute “2” for “0” for second digit of Part Number. Example; Part Number 92024B06 in the Series 92000 version 0.590" (15mm centers) of Part Number 90024B06 0.394" (10mm centers) interlock with lock-out, 2-C switching per station.

DIMENSIONS ARE FOR REFERENCE ONLY Inch (mm)

® Registered trademark of Switchcraft, Inc.
Note: Contact your Switchcraft Representative for price and delivery

* Please visit the product pages on our website for the most up-to-date product information

MULTIPLE-STATION SWITCHES (continued)

TINI® DW MULTI-SWITCH
SERIES 90000 and 92000

RECOMMENDED PC BOARD LAYOUT (Component Side)

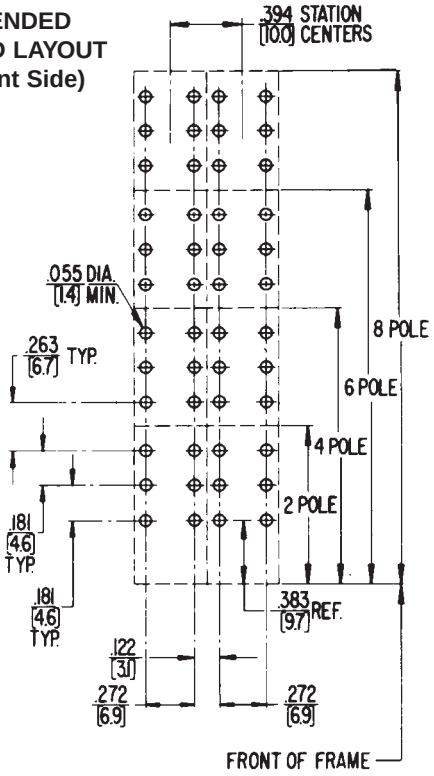

PANEL OPENING SERIES 90000 WITH SERIES A-650 PUSHBUTTONS

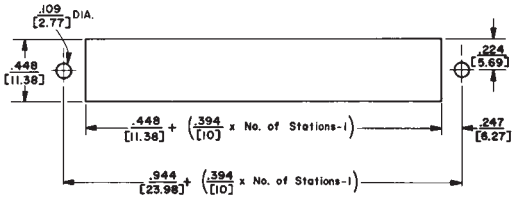

PANEL OPENING SERIES 92000 WITH SERIES A-650 PUSHBUTTONS

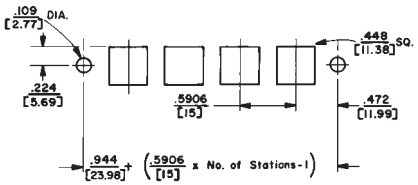

PANEL OPENING SERIES 92000 WITH TDW-F PUSHBUTTONS

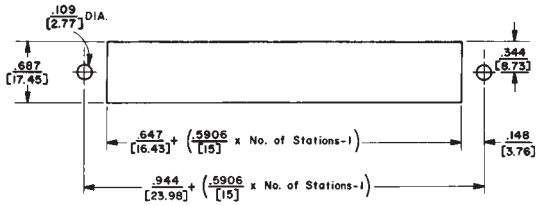

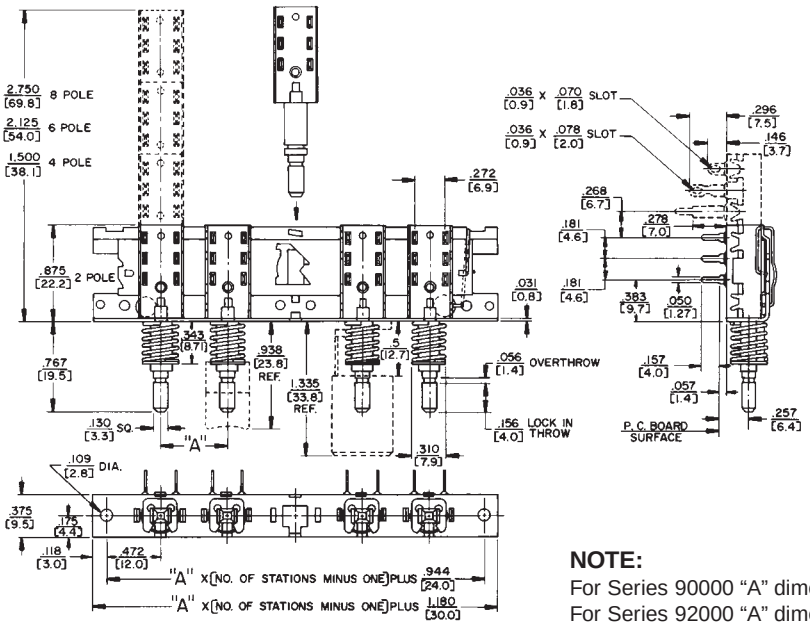

NOTE:
For Series 90000 “A” dimension is .394" (10.0mm)
For Series 92000 “A” dimension is .590" (15.0mm)

DIMENSIONS ARE FOR REFERENCE ONLY Inch (mm)

* Please visit the product pages on our website for the most up-to-date product information

MULTIPLE-STATION SWITCHES (continued)

IBS10B04106AR

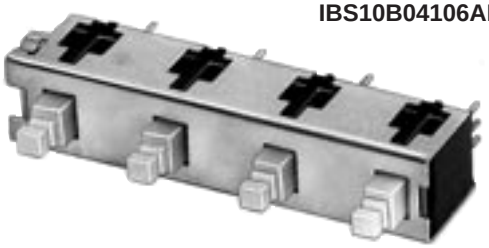



TYPE I
0.388 (9.86) x 0.216 (5.49)



TYPE II
0.464 (11.79) x 0.288 (7.32)

IBS MULTI-SWITCH SWITCHES
SERIES IBS

Series IBS miniature pushbutton switches are mounted on common frames, up to 12 stations long with center-to-center spacing of 0.394" (10mm), 0.590" (15mm) or 0.787" (20mm). Available with interlock, non-lock (momentary) or push-lock/push-release mechanical functions. .130" (3.30mm) x .130" (3.30mm) square plungers accept a full line of industry standard pushbuttons. Switches are stocked without pushbuttons due to wide variety that can be used. Order pushbuttons separately. Switches have .157" (4mm) long PC terminals for mounting single- or double-sided PC boards up to .094" (2.39mm) thick. Close stacking (centers) permits high density within minimum front panel space.

PUSHBUTTONS

Pushbuttons designed for IBS switches are available in white, black, red, blue and gray. Others colors are available on special order. Pushbutton faces are concave for operator convenience and can be mounted either horizontally or vertically. Pushbuttons must be ordered separately, but may be factory installed, if desired, at nominal extra cost.

SPECIFICATIONS
MECHANICAL

Switch Actuation: Momentary, interlock and push-lock/push-release.
Plunger Travel: .144" (3.66 mm).
Actuation Force: At .135" (3.43mm) travel: 12-15 oz.

ELECTRICAL

0.125A resistive @ 125 V AC, .25 AMP at 28V DC.

MATERIALS

Housing: Thermoplastic 94V-0.
Plunger: Thermoplastic UL 94V-0.
Contactors: Copper alloy.
Terminals: Copper alloy, solder plated. Tin-dipped available on special order.
Contact Surfaces: Plated.
Frame: Copper alloy.
Latch Bar: Thermoplastic.

PART NUMBERS/0.394" (10MM) CENTERS[1]

Interlock	Number of Stations[2]
◊IBS10B02106AR	2
◊IBS10B04106AR	4
◊IBS10B06106AR	6
◊IBS10B08106AR	8
◊IBS10B10106AR	10
◊IBS10B12106AR	12

PART NUMBERS/0.590" (15MM) CENTERS[1]

◊IBS15B02106AR	2
◊IBS15B04106AR	4
◊IBS15B06106AR	6
◊IBS15B08106AR	8
◊IBS15B10106AR	10
◊IBS15B12106AR	12

PART NUMBERS/0.787" (20MM) CENTERS[1]

◊IBS20B02106AR	2
◊IBS20B04106AR	4
◊IBS20B06106AR	6
◊IBS20B08106AR	8
◊IBS20B10106AR	10
◊IBS20B12106AR	12

1. Switches with all-lock function are available on special order. Contact Switchcraft.
2. Odd number of stations (3, 5, 7, 9, 11) are available. Switches with 13 through 18 stations also available. Contact Switchcraft.

◊ Special order only; Contact Switchcraft for price and delivery information.

PUSHBUTTON PART NUMBERS

Type I	Type II	Color
P2936	P2951	White
P2937	P2952	Black
P2938	P2953	Red
◊P2939	◊P2954	Yellow
◊P2940	◊P2955	Green
P2941	P2956	Blue
P2942	P2957	Gray
◊P2943	◊P2958	Brown
-	◊P2979	Cream
-	◊P2992	Tangerine

◊ Available on special order only; contact Switchcraft for price and delivery.

DIMENSIONS ARE FOR REFERENCE ONLY Inch (mm)

® Registered trademark of Switchcraft, Inc.
Note: Contact your Switchcraft Representative for price and delivery

* Please visit the product pages on our website for the most up-to-date product information

MULTIPLE-STATION SWITCHES (continued)

IBS MULTI-SWITCH SWITCHES
SERIES IBS

IBS PART NUMBERING CODE

IBS	XX	X	XX	X	XX[1]	X	R
	CENTERS 0.394" (10mm) 0.590" (15mm) 0.787" (20mm)	FRAME STYLE A - Mounting Ears B - No Mounting Ears	STATIONS 01 - 12	MECHANICAL FUNCTION 1 - Interlock 2 - Non-Lock	CIRCUITS 01 - 1A 02 - 1B 03 - 1C 04 - 2A 05 - 2B 06 - 2C	TERMINAL LENGTH A - 0.157" (4mm)	

* 8 stations maximum on 0.787" (20mm) centers.
1. See page 269 for individual switch terminal conjunction.

DIMENSIONS

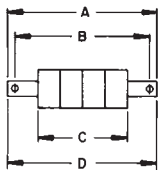

0.394" (10mm)

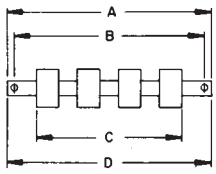

0.590" (15mm)

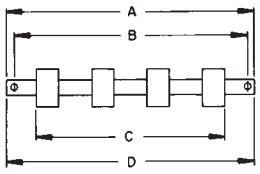

0.787" (20mm)

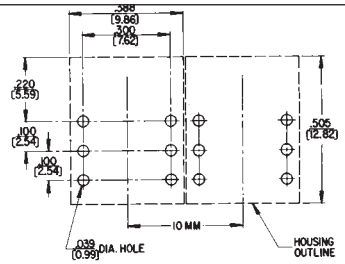

RECOMMENDED PC BOARD LAYOUT (Component Side)
(.300 x .100)
(7.62 mm) x (2.54)

0.394" (10mm) CENTERS

STATIONS

		Dimension		2	3	4	5	6	7	8	9	10	11	12
MTG. EARS		A	in.	1.518	1.912	2.305	2.699	3.093	3.486	3.880	4.274	4.667	5.061	5.455
			(mm)	(38,56)	(48,56)	(58,55)	(68,55)	(78,56)	(88,54)	(98,55)	(108,56)	(118,54)	(128,55)	(138,56)
		B	in.	1.270	1.663	2.057	2.451	2.845	3.238	3.632	4.026	4.419	4.814	5.207
			(mm)	(32,26)	(42,24)	(52,25)	(62,26)	(72,26)	(82,25)	(92,25)	(102,26)	(112,24)	(122,28)	(132,26)
	NO MTG. EARS	C	in.	.782	1.175	1.569	1.963	2.357	2.750	3.144	3.538	3.931	4.325	4.719
			(mm)	(19,86)	(29,84)	(39,85)	(49,86)	(59,87)	(69,85)	(79,86)	(89,86)	(99,85)	(109,86)	(119,86)
		D	in.	.876	1.269	1.663	2.057	2.451	2.844	3.238	3.632	4.025	4.419	4.813
			(mm)	(22,25)	(32,23)	(42,24)	(52,25)	(62,26)	(72,24)	(82,24)	(92,25)	(102,24)	(112,24)	(122,25)

0.590" (15mm) CENTERS

STATIONS

		Dimension		2	3	4	5	6	7	8	9	10	11	12
MTG. EARS		A	in.	1.715	2.305	2.896	3.486	4.077	4.667	5.258	5.848	6.439	7.030	7.620
			(mm)	(43,56)	(58,55)	(73,56)	(88,54)	(103,56)	(118,54)	(133,55)	(148,54)	(163,55)	(178,56)	(193,55)
		B	in.	1.467	2.057	2.648	3.238	3.829	4.419	5.010	5.600	6.191	6.782	7.372
			(mm)	(37,26)	(52,25)	(67,26)	(82,25)	(97,26)	(112,24)	(127,25)	(142,24)	(157,25)	(172,26)	(187,25)
	NO MTG. EARS	C	in.	.979	1.569	2.160	2.750	3.341	3.932	4.522	5.112	5.703	6.294	6.884
			(mm)	(24,87)	(39,85)	(54,86)	(69,85)	(84,86)	(99,87)	(114,86)	(129,84)	(144,86)	(159,87)	(174,85)
		D	in.	1.073	1.663	2.254	2.844	3.435	4.025	4.616	5.206	5.797	6.388	6.978
			(mm)	(27,25)	(42,24)	(57,25)	(72,24)	(87,25)	(102,24)	(117,25)	(132,23)	(147,24)	(162,26)	(177,24)

0.787" (20mm) CENTERS

STATIONS

		Dimension		2	3	4	5	6	7	8
MTG. EARS		A	in.	1.911	2.699	3.486	4.274	5.061	5.848	6.636
			(mm)	(48,54)	(68,55)	(88,54)	(108,56)	(128,55)	(148,54)	(168,55)
		B	in.	1.663	2.451	3.238	4.026	4.813	5.600	6.388
			(mm)	(42,24)	(62,26)	(82,24)	(102,26)	(122,25)	(142,24)	(162,25)
	NO MTG. EARS	C	in.	1.175	1.963	2.750	3.538	4.325	5.112	5.900
			(mm)	(29,84)	(49,86)	(69,85)	(89,86)	(109,86)	(129,84)	(149,86)
		D	in.	1.269	2.057	2.844	3.632	4.419	5.206	5.994
			(mm)	(32,23)	(52,25)	(72,24)	(92,25)	(112,24)	(132,23)	(152,25)

DIMENSIONS ARE FOR REFERENCE ONLY Inch (mm)

* Please visit the product pages on our website for the most up-to-date product information

MULTIPLE-STATION SWITCHES (continued)

MULTI-SWITCH PUSHBUTTONS

	Illuminated			Non-Illuminated					
Switch Series	**Fig. 1**	**Fig. 2**	**Fig. 3**	**Fig. 4**	**Fig. 5**	**Fig. 6**	**Fig. 7**	**Fig. 8**	**Fig. 9**
									
Pushbutton Series[1]	**400[4]**	**409[5]**	**DW300[6]**	**A-590**	**E-590[5]**	**A-650**	**TDW-F**	**Type I**	**Type II**
35000				**X-(Std.)**	**X**				
37000	**X (Std.)**	**X**							
38000	**X (Std.)**	**X**							
65000[2]									
67000			**X (Std.)**						
90000[3]						**X**			
92000[3]						**X**	**X**		
IBS[3]								**X**	**X**

1. Any pushbutton series can be specified with engraved legends.
2. Buttons are an integral part of switch assembly on Series 65000.
3. Switches stocked without pushbuttons due to wide variety that can be used. Order buttons separately.
4. Display screens and inserts are also available in a wide choice of colors; see "SPECIAL EFFECTS COLOR DISPLAY SCREENS AND INSERTS".
5. Double width button
6. Colored inserts are available in a wide choice of colors; see "SERIES DW40 COLOR INSERTS".

SPECIFYING NOTE:

Most pushbuttons can be specified in red, black, green, blue, white or yellow. "Black-Screen", amber, clear, and other colors are also possible. Contact Switchcraft with your requirements.

SERIES TDWF - "FLIP-FLOP" PUSHBUTTONS

Unique internal "flip-flop" mechanism permits button face to change colors without electrical energy, lamps or wiring. When pushbutton is operated, highly reflective panels inside housing change position and use ambient light to give a bright illuminated effect. Black pushbuttons are .59" (15mm) high x .63" (16mm) wide. Display window is .315" (8mm) x .374" (9.5mm) wide.

NOTE: "FLIP-FLOP" PUSHBUTTONS ARE DESIGNED FOR USE WITH SERIES 92000 SWITCHES ONLY.
Order "flip-flop" pushbuttons with Series 92000 switches.
TDW-F "Flip-Flop" Pushbutton Part Numbering

TDW-F "FLIP-FLOP" PUSHBUTTON PART NUMBERING

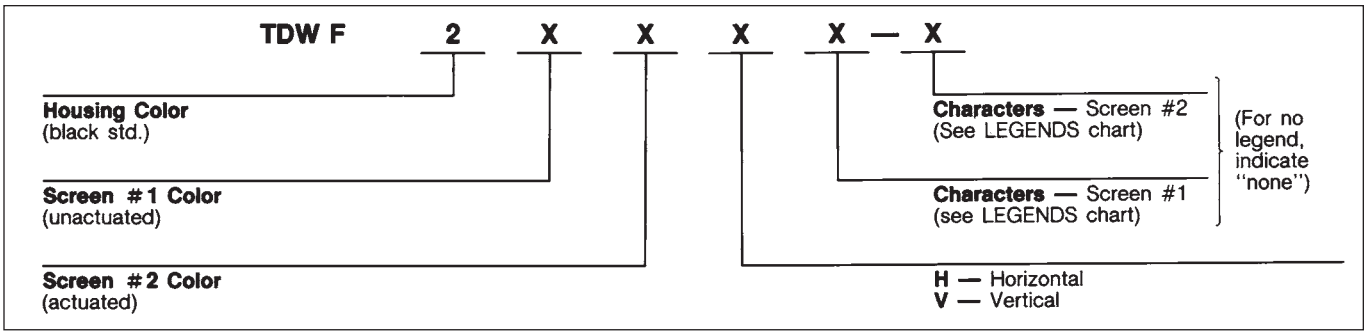

DIMENSIONS ARE FOR REFERENCE ONLY Inch (mm)

® Registered trademark of Switchcraft, Inc.
Note: Contact your Switchcraft Representative for price and delivery

* Please visit the product pages on our website for the most up-to-date product information

MULTIPLE-STATION SWITCHES (continued)

MULTI-SWITCH PUSHBUTTONS
TDWF PUSHBUTTON LEGENDS (special order)

Horizontally Mounted Switches: Three, .125" (3.18 mm) high characters, each pushbutton.
Vertically Mounted Switches: Three, .125" (3.18 mm) high characters, each pushbutton.

LEGEND CHARACTERS AVAILABLE

1 through 999		A through ZZZ	
.	Period	“	Quotes
-	Short Dash	--	Long Dash
←	Arrow	&	Ampersand
#	Number or Pound	/	Slash
$	Dollar	¢	Cent
|	Vertical Bar		

NOTE: Recommended minimum standoff for switches mounted with TDW-F pushbutton is .5" (12.7mm).

SERIES X, Y AND Z “GLO-BUTTON”

Non-illuminated pushbuttons provide a clearly visible legend like illuminated pushbuttons - without lamps, wiring or power. With button depressed, illuminator moves up behind front screen, and legend “lights up” by efficient reflection of external ambient light. With button in “out” position, illuminator retracts and legend appears non-luminous. Series X - specify for horizontal or vertical mount switches. Series Y - legends marked across .625" (15.88 mm) dimension. For horizontal mount switches. Series Z - legends marked across .75" (19.05 mm) dimension. For vertical mount switches.

Part Number	Figure	Screen Color	Illuminator Color	Size inches (mm)	
				Width	Height
X21248◊	10	Black	Orange-Red	.5 (12.7)	.5 (12.7)
X51248◊	10	White			
Y21248◊	11	Black	Orange-Red	.625 (15.88)	.75 (19.05)
Y28248◊	11	Black	Chartreuse		
Y51248◊	11	White	Orange-Red		
Z21248◊	12	Black	Orange-Red	.75 (19.05)	.625 (15.88)
Z28248◊	12	Black	Chartreuse		
Z51248	12	White	Orange-Red		

MULTI-SWITCH PUSHBUTTON PART NUMBERS

Use the information below to specify colors of the pushbutton series desired. Series TDWF must be specified separately (see page 316).

PART NUMBER	FIGURE	COLOR	Overall Size Inch (mm)	
			Width	Height
◊40001	1	Red	.594 (15.09)	.974 (24.7)
◊40002		Black		
◊40003		Green		
◊40004		Blue		
40005		White		
◊40008		Yellow		
40012		Clear		
◊40901	2	Red	1.219 (30.96)	.719 (18.26)
◊40902		Black		
◊40903		Green		
◊40904		Blue		
◊40905		White		
◊40908		Yellow		
◊40912		Clear		
A591	4	Red	.594 (15.09)	.594 (15.09)
A592		Black		
◊A593		Green		
◊A594		Blue		
A595		White		
◊A596		Brown		
◊A598		Yellow		
◊E591	1	Red	1.234 (31.34)	.594 (15.09)
◊E592		Black		
◊E594		Blue		
◊E595		White		
◊E596		Brown		
◊E598		Yellow		

◊ Available on special order only; contact Switchcraft for price and delivery.

DIMENSIONS ARE FOR REFERENCE ONLY Inch (mm)

* Please visit the product pages on our website for the most up-to-date product information

Switchcraft®

® Registered trademark of Switchcraft, Inc.
Note: Contact your Switchcraft Representative for price and delivery

* Please visit the product pages on our website for the most up-to-date product information

03BL2M....47
05BL3M....47
05BL5M....47
05CL3M....46
05CL5M....46
05DL3M....47
05DL5M....47
05GM3M....46
05GM5M....46
05YL3M....47
05YL5M....47
06AL5F....48
06EL5F....48
09BL4M....47
09CL4M....46
09DL4M....47
09GM4M....46
09YL4M....47
101....274
101S....274
102....274
102S....274
103....274
103S....274
11....94
11001....231
11001L....231
11002....231
11002L....231
11003....231
11003D....231
11003DL....231
11003L....231
11004....231
11004L....231
11005....231
11005L....231
11006....231
11006D....231
11006DL....231
11006L....231
11008....231
11008L....231
11009....231
11009L....231
11012....231
11012L....231
111....98
111PC....98
111PCS....100
11201....231
11201L....231
11202....231
11202L....231
11203....231
11203D....231
11203DL....231
11203L....231
11204....231
11204L....231
11205....231
11205L....231
11206....231
11206D....231
11206DL....231
11206L....231
11208....231
11208L....231
11209....231
11209L....231
11212....231
11212L....231
112A....98
112APC....98
112APCS....100
112B....98
112BPC....98
112BPCS....100
113....98
113B....98
113BPC....98
113BPC1M....98
113BPCS....100
113D....98
113DPC....98
113E....98
113EPC....98
113EPCS....100
113F....98
113FPC....98
113FPCS....100
113PC....98
113PCS....100
114B....98
114BPC....98
114BPC1M....98
114BPCS....100
120....108
1200....203
12001....297
12002....297
12003....297
12003D....297
12004....297
12005....297
12006....297
12006D....297
12010....297
12011....297
12012....297
12013....297
12014....297
12015....297
12016....297
12017....297
12033....297
12033T....297
12034....297
12035....297
12036....297
12036D....297
12037....297
12037T....297
121....108
1230....108
1238....108
125....109
128....108
12A....94
12B....94
12BL5M....47
12BL6M....47
12CL5M....46
12DL5M....47
12DL6M....47
12GM5M....46
12GM6M....46
12YL5M....47
13....94
131....108
133....155
1332A....203
1332B....203
1334B....203
1394RAPC....58
1394SMT....58
13A....94
13AL5F....48
13AL6F....48
13B....94
13E....94
13EL5F....48
1400....203
1400301....203
1400315....203
142A....110
14B....94
151....107
152....107
152B....107
153....107
1532A....203
1532A301....203
1532B....203
1532B301....203
1534B....203
154....107
155....107
15AL7F....48
15AL8F....48
15BL7M....47
15BL8M....47
15CL7M....46
15CL8M....46
15DL7M....47
15EL8F....48
15GM7M....46
15GM8M....46
15J9068....230
15J9076....230
15J9077....230
15J9078....230
160....147
1600....212
1632A....212
1632B....212
1634B....212
16J1055....223
170....147
1700....212
172....148
173....152
174S....152
175....152
176S....152
177S....152
178....152
1789....212
179....152
181....148
182....148
182QB....147
182QBD....147
184....147
184L....147
187....149
187B....149
187BD....149
187BL....149
187D....149
187L....149
188....149
18QA18....262
18QB18....262
18QD18....262
18QF18....262
18QH18....262
18QK18....262
18QN18....262
190....151
190A....151
190B....151
190BL....151
201....274
201S....274
202....274
202S....274
203....274
203S....274
20GM8M....46
20Q*20**....262
220....153
225....153
226....154
227....153
228....153
229....153
22QB22....263
22QD22....263
22QF22....263
22QK22....263
22QN22....263
230....153
2300....86
2331....86
2332A....86
2332B....86
2333....86
235....153
236....154
237....153
238....153
239....153
240....145
2400....205
2432A....205
2432B....205
2434B....205
245....145
24B....109
25....109
250....145
2501F....65
2501M....65
2501MP....65
2532A....205
2532B....205
2533....205
2533B....205
2534B....205
2542B....205
2544B....205
255....145
2588....205
2589....205
260....145
2600....205
2600301....205
2600310....205
267....145
269....145
26U1003....278
26U1004....278
26U1005....278
26U1006....278
26U1007....278
26U1008....278
26U1009....278
26U1010....278
270....145-146
2732A....205
2732A301....205
2732B....205
2732B301....205
2733B....205
2734B....205
2734B301....205
2789....205
280....145-146
281....145-146
282....155
285....145-146
285L....145
288....145-146

INDEX Switchcraft

* Please visit the product pages on our website for the most up-to-date product information

290 145-146
297 145-146
298 ..... 146, 155
299 150
2BL6M 47
2C1072 134
2P-1216 148
2P1248 145
2P1251 147
2P1298 145
2P1384 157
2P1419 158
2P1495 145
2P1509 153
2P1515 162
2P1624 162
2P2003 143
305HJ084184 247
305KD084184 247
306HK042306 247
306HK084306 247
321 27
322 27
323 27
324 27
32HR*** 240
330F1 161
330F2 161
332A 159
336A 159
336B 159
33HR*** 240
340 159
345A 159
349A 159
350 148
3501F 123
3501FP 123
3501FR 123
3501M 161
3501MC 161
3502 161
35021K206 303
35021K212 303
35022206 303
35022212 303
35027206 303
35027212 303
3502A 161
3502AAU 161
3502ABAU 161
3502RA 161
3502RAAU 161
3502RABAU 161
3503 123
35041K206 303
35041K212 303
35042206 303
35042212 303
35047206 303
35047212 303
3504M 161
3505F 123
35061K206 303
35061K212 303
35062206 303
35062212 303
35067206 303
35067212 303
3507 161
35081K206 303
35081K212 303
35082206 303
35082212 303
35087206 303
35087212 303
35101K206 303
35101K212 303
35102206 303
35102212 303
35107206 303
35107212 303
35121K206 303
35121K212 303
35122206 303
35122212 303
35127206 303
35127212 303
3514PC 123
3515PC 123
3517PC 123
352A 159
35581 161
35582 161
35585 161
35HDBAU 156
35HDBAUS 156
35HDBN 156
35HDBNS 156
35HDNAU 156
35HDNAUS 156
35HDNN 156
35HDNNS 156
35HDRAAU 156
35HDRABAU 156
35HDRANN 156
35HR*** 240
35PM1 119
35PM2A 119
35RAPC2AH3 ..... 114, 116
35RAPC2AHN2 ..... 114, 116
35RAPC2AHN3 114
35RAPC2AV 114-115
35RAPC2AV4 114-115
35RAPC2AVN4 114
35RAPC2BH3 ..... 114, 116
35RAPC2BHN2 ..... 114, 116
35RAPC2BHN3 114
35RAPC2BV4 114-115
35RAPC2BVN4 114
35RAPC3BH3 ..... 114, 116
35RAPC3BHN2 ..... 114, 116
35RAPC3BHN3 114
35RAPC3BV4 114-115
35RAPC3BVN4 114
35RAPC4BH3 ..... 114, 116
35RAPC4BHN2 ..... 114, 116
35RAPC4BHN3 114
35RAPC4BV4 114-115
35RAPC4BVN4 114
35RAPC7J 112
35RAPC7JS 112
35RASMT 117
35RASMT2AHNTR 117
35RASMT2BHNTR 117
35RASMT3BHNTR 117
35RASMT4BHNTR 117
361A 159, 265
362A 265
363 159
364A 159
365 159
36HR*** 240
37021K1206 305
37021K1212 305
370221206 305
370221212 305
370271206 305
370271212 305
37041K1206 305
37041K1212 305
370421206 305
370421212 305
370471206 305
370471212 305
37061K1206 305
37061K1212 305
370621206 305
370621212 305
370671206 305
370671212 305
37081K1206 305
37081K1212 305
370821206 305
370821212 305
370871206 305
370871212 305
370A 159
37101K1206 305
37101K1212 305
371021206 305
371021212 305
371071206 305
371071212 305
37121K1206 305
37121K1212 305
371221206 305
371221212 305
371271206 305
371271212 305
374 159
376 159
377 159
380 148
38021K1206 305
38021K1212 305
380221206 305
380221212 305
380271206 305
380271212 305
38041K1206 305
38041K1212 305
380421206 305
380421212 305
380471206 305
380471212 305
38061K1206 305
38061K1212 305
380621206 305
380621212 305
380671206 305
380671212 305
38081K1206 305
38081K1212 305
380821206 305
380821212 305
380871206 305
380871212 305
38101K1206 305
38101K1212 305
381021206 305
381021212 305
381071206 305
381071212 305
38121K1206 305
38121K1212 305
381221206 305
381221212 305
381271206 305
381271212 305
383A 27
384A 27
386A 28
387A 28
389 28
390 28
391Q13 28
391Q23 28
391Q33 28
391Q43 28
391Q53 28
391Q63 28
40 147
40001 317
40002 317
40003 317
40004 317
40005 317
40008 317
40012 317
40101 306
40103 306
40104 306
40105 306
40108 306
40112 306
40116 306
40201 306
40203 306
40204 306
40205 306
40208 306
40212 306
40401 306
40403 306
40404 306
40405 306
40408 306
40412 306
40502 306
40505 306
406 306
40701 306
40703 306
40704 306
40705 306
40708 306
40901 317
40902 317
40903 317
40904 317
40905 317
40908 317
40912 317
41 110
411 141
412 141
41203 298
41206 298
41208 298
41212 298
41306 298
41308 298
41312 298
41324 298
414 141
415 141
420 138
425 138
42A 110
43A 110
44 65
46201ME 284
46201MR 284
46202LE 284
46202LR 284
46202ME 284
46202MR 284
46203LE 284
46203LR 284
46203LSE 284
46203LSR 284
46203ME 284
46203MR 284

® Registered trademark of Switchcraft, Inc.

Note: Contact your Switchcraft Representative for price and delivery

* Please visit the product pages on our website for the most up-to-date product information

46204LE....284
46204LR....284
46204ME....284
46204MR....284
46206LE....284
46206LFE....284
46206LFR....284
46206LR....284
46206LSE....284
46206LSR....284
46206ME....284
46206MP....284
46206MR....284
46256LFR....284
46311LDR....285
46311MDR....285
46311TDR....285
46313LDR....285
46313MDR....285
46313TDR....285
47202LE....286
47202LR....286
47203LE....286
47203LR....286
47204LCE....286
47204LCR....286
47204LE....286
47204LR....286
47206LCE....286
47206LCR....286
47206LE....286
47206LR....286
47215LCR....286
47215LR....286
47217LCR....286
47217LR....286
47221LCR....286
47221LR....286
47227LFE....286
47227LFR....286
482....140
482N....140
482NC....140
483N....140
483NC....140
49101....232
49102....232
49105....232
49201....232
49202....232
49205....232
49301....232
49302....232
49305....232
49309L....287
49309LS....287
49312L....287
49312LS....287
49329L....287
49329LS....287
49331L....287
49331LS....287
50207L....287
50207M....287
50208L....287
50209L....287
50209LS....287
50209M....287
50209MS....287
50212L....287
50212LS....287
510....106
512....106
515....106
516-090-000-301....178
516-090-000-302....178
516-120-000-101....178
516-120-000-102....178
516-290-500....178
516-290-590....178
520....106
53B....109
54A....109
54B....109
55....109
5501F....65
5501M....65
5501MF....65
5501MP....65
55HA2F....50
56206L1....288
56206L2....288
56313L1....289
56313L2....289
570....146
57GB3F....49
57GB5F....49
57HB3F....50
57HB5F....50
57KD3M....48
57NC5F....50
57PC3F....51
57PC3FS....52
57PC5F....51
57PC5FS....52
580....146
581....146
585....146
588....146
58NC3F....50
590....146
597....146
598....146
59GB3F....49
60....151
60GB4F....49
60HA4F....50
60NC4F....50
60PC4F....51
60PC4FS....52
610....106
612....106
615....106
61GB5F....49
61GB6F....49
61HA5F....50
61NC5F....50
61PC5F....51
61PC5FS....52
61PC6F....51
61PC6FS....52
620....106
62206L....290
62GB7F....49
62GB8F....49
62HB7F....50
62HB8F....50
62NC7F....50
62NC8F....50
62PC7F....51
62PC7FS....52
62PC8F....51
62PC8FS....52
65021K206....309
65021K212....309
65022206....309
65022212....309
65027206....309
65027212....309
65041K206....309
65041K212....309
65042206....309
65042212....309
65047206....309
65047212....309
65061K206....309
65061K212....309
65062206....309
65062212....309
65067206....309
65067212....309
65081K206....309
65081K212....309
65082206....309
65082212....309
65087206....309
65087212....309
65101K206....309
65101K212....309
65102206....309
65102212....309
65107206....309
65107212....309
65121K206....309
65121K212....309
65122206....309
65122212....309
65127206....309
65127212....309
67021K506....310
67021K512....310
67022506....310
67022512....310
67027506....310
67027512....310
67041K506....310
67041K512....310
67042506....310
67042512....310
67047506....310
67047512....310
67061K506....310
67061K512....310
67062506....310
67062512....310
67067506....310
67067512....310
67081K506....310
67081K512....310
67082506....310
67082512....310
67087506....310
67087512....310
67101K506....310
67101K512....310
67102506....310
67102512....310
67107506....310
67107512....310
67121K506....310
67121K512....310
67122506....310
67122512....310
67127506....310
67127512....310
70....147
712A....134
712RA....134
722A....134
722RA....134
732A....134
732RA....134
740....157
745....157
750....157
755....157
760....162
760K....162
761K....162
765....162
765K....162
766K....162
770....157
780....157
80....108
820....142
830....108
838....108
84206....296
84206L....296
84212....296
84212L....296
84306....296
84306L....296
84312....296
84312L....296
84324....296
84324L....296
850....121, 158
851....158
852....158
853....158
855....158
856....158
857....158
858....158
860....162
865....162
88....108
880....158
881....158
882....158
883....158
90....151
90022B06....312
90022B12....312
90024B06....312
90024B12....312
90027B06....312
90027B12....312
90042B06....312
90042B12....312
90044B06....312
90044B12....312
90047B06....312
90047B12....312
90062B06....312
90062B12....312
90064B06....312
90064B12....312
90067B06....312
90067B12....312
90082B06....312
90082B12....312
90084B06....312
90084B12....312
90087B06....312
90087B12....312
90102B06....312
90102B12....312
90104B06....312
90104B12....312
90117B06....312
90117B12....312
90122B06....312
90122B12....312
90124B06....312
90124B12....312
90127B06....312
90127B12....312
903....273
903D....273
9115....30
9129....30

* Please visit the product pages on our website for the most up-to-date product information

913....273
913D....273
9144....30
921....245, 276
921K....245, 276
923....273
923D....273
9244....30
933....273
933D....273
951....273
952....273
953....273
961....273
962....273
963....273
97GV***....244
982A01R....269
982A03R....269
982A06R....269
99GD0726....244
99GV***....244
A1600....212
A1632B....212
A1634B....212
A3F....4-5
A3F01....5
A3F02....5
A3F03....5
A3F04....5
A3F05....5
A3F06....5
A3F07....5
A3F08....5
A3F09....5
A3FB....4
A3FBAU....4
A3FD....4
A3FL....4
A3FS....4
A3M....4-5
A3M01....5
A3M02....5
A3M03....5
A3M04....5
A3M05....5
A3M06....5
A3M07....5
A3M08....5
A3M09....5
A3MB....4
A3MBAU....4
A3ML....4
A3MS....4
A4F....4
A4FB....4
A4FBAU....4
A4FD....4
A4FL....4
A4M....4
A4MB....4
A4MBAU....4
A4ML....4
A591....317
A592....317
A593....317
A594....317
A595....317
A596....317
A598....317
A5F....4
A5FB....4
A5FBAU....4
A5FD....4
A5FL....4
A5M....4
A5MB....4
A5MBAU....4
A5ML....4
A6501....312
A6502....312
A6503....312
A6504....312
A6505....312
A6508....312
A6F....4
A6FB....4
A6FBAU....4
A6M....4
A6MBAU....4
A7F....4
A7FB....4
A7FBAU....4
A7M....4
A7MBAU....4
AA3F....4
AA3FB....4
AA3FBAU....4
AA3FD....4
AA3FL....4
AA3FLD....4
AA3M....4
AA3MB....4
AA3MBAU....4
AA3ML....4
AA4F....4
AA4FB....4
AA4FD....4
AA4FL....4
AA4M....4
AA4ML....4
AA5F....4
AA5FB....4
AA5FD....4
AA5FL....4
AA5M....4
AA5MB....4
AA5ML....4
AA6F....4
AA6FB....4
AA6FD....4
AA6FL....4
AA6M....4
AA6ML....4
AA7F....4
AA7FB....4
AA7FD....4
AA7FL....4
AA7M....4
AA7ML....4
AAA*F....6
AAA*M....6
AD1600....212
AD1632B....212
AD1634....212
AQGP322....4
AQGP323....4
B1600....212
B1632B....212
B1634B....212
B1650....212
B1700....212
B1795....212
B1796....212
B3F....10
B3FB....10
B3M....10
B3MB....10
B4F....10
B4M....10
B5F....10
B5M....10
B6F....10
B6M....10
B7F....10
B7M....10
BD1600....212
BD1632B....212
BD1634B....212
BD1650....212
BD1700....212
BD1795....212
BD1796....212
BPJF01....123
BPJF01AU....123
BPJF02....123
BPJF02AU....123
BPJF03....123
BPJF03AU....123
BPJF04....123
BPJF04AU....123
BPJF05....123
BPJF05AU....123
BPJF06....123
BPJF06AU....123
BPJJ01....123
BPJJ01AU....123
BPJJ02....123
BPJJ02AU....123
BPJJ03....123
BPJJ03AU....123
BPJJ04....123
BPJJ04AU....123
BPJJ05....123
BPJJ05AU....123
BPJJ06....123
BPJJ06AU....123
BPJR01....123
BPJR01AU....123
BPJR02....123
BPJR02AU....123
BPJR03....123
BPJR03AU....123
BPJR04....123
BPJR04AU....123
BPJR05....123
BPJR05AU....123
BPJR06....123
BPJR06AU....123
BXR011....272
BXR0110....272
BXR011PC....272
BXR013....272
BXR013P....272
BXR016....272
BXR016P....272
BXR021....272
BXR0210....272
BXR021PC....272
BXR023....272
BXR023P....272
BXR026....272
BXR026PC....272
BXR03....272
BXR0310....272
BXR0310PC....272
BXR031PC....272
BXR033....272
BXR033PC....272
BXR036....272
BXR036PC....272
BXR051....272
BXR0510....272
BXR051PC....272
BXR053....272
BXR053PC....272
BXR056....272
BXR056PC....272
C11....94
C12A....94
C12B....94
C1600....212
C1634B....212
C240....145
C245....145
C270....145
C3F....10
C3M....10
C46203LR....284
C46204MR....284
C46206LFR....284
C46206LR....284
C4F....10
C4M....10
C55B....109
C56206L1....288
C56206L2....288
C56313L1....289
C56313L2....289
C5F....10
C5M....10
C62206L....290
C63212L....290
C6F....10
C6M....10
C7F....10
C7M....10
CB3F....65
CB3M....65
CD1600....212
CD1634B....212
CMT331....83
CMT332....83
CMT332A....83
CMT332B....83
CMT332C....84
CMT333....83
CMT333A....83
CMT333B....84
CMT334-B....83
CMT334A....83
CMT334C....83
CMT334E....83
CMT334F....83
CMT335....83
CMT335A....84
CMT336....83
CMT336A....83
CMT336B....83
CMT336C....83
CMT336D....83
CMT336E....83
CMT337....83
CMT338....83
CMT339....83
CMT341....84
CMT342B....84
CMT344B....84
CMT346....83
CMT346C....84
CMT351C....83
CMT354F....83
CMT356C....83
CMT358....83
CMT359....83
CN11....109
CN12A....109
CN12B....109
CN13B....109
CPC102A....263
CPC102D....263
CPC102F....263
CPC102K....263
CPC102N....263

® Registered trademark of Switchcraft, Inc.

Note: Contact your Switchcraft Representative for price and delivery

* Please visit the product pages on our website for the most up-to-date product information

CPC102R....263
CPC102T....263
CPC102U....263
D1600....212
D1632A....212
D1632B....212
D1634B....212
D1700....212
D1789....212
D3F....9
D3FB....9
D3FBAU....9
D3FD....9
D3FDB....9
D3M....9
D3MB....9
D3MBAU....9
D4F....9
D4FB....9
D4FBAU....9
D4M....9
D4MB....9
D4MBAU....9
D5F....9
D5FB....9
D5FBAU....9
D5M....9
D5MB....9
D5MBAU....9
D6F....9
D6FB....9
D6FBAU....9
D6FDB....9
D6M....9
D6MB....9
D6MBAU....9
D7F....9
D7FB....9
D7FBAU....9
D7M....9
D7MB....9
D7MBAU....9
DA013....275
DA023....275
DA033....275
DA043....275
DA053....275
DA083....275
DMD*FRA***....53
DS301....236
DS302....236
DS303....236
DS306....236
DS307....236
DS308....236
DS311....237
DS312....237
DS313....237
DS316....236
DS317....236
DS318....236
DS321....238
DS322....238
DS323....238
DS350....238
DS351....238
DS352....238
DS353....238
DUSB....56
DW05....311
DW1....311
DW101....311
DW102....311
DW201....311
DW202....311
DW205....311
DW3....311
DW301....310
DW302....310
DW303....310
DW304....310
DW305....310
DW308....310
DW312....310
DW313....310
DW316....310
DW4....311
DW41....310
DW43....310
DW44....310
DW45....310
DW47....310
DW48....310
DW7....311
E*F....12
E*M....12
E111L....107
E112BL....107
E591....317
E592....317
E594....317
E595....317
E596....317
E598....317
E903....276
E903D....276
E913....276
E913D....276
EAC225....71
EAC227....70
EAC233....70
EAC233S....70
EAC305....70
EAC309....70
EAC311....70
EAC315....70
EAC319....70
EAC323....70
EAC325....70
EAC327....70
EAC333....70
EAC333S....70
EAC405....70
EAC409....70
EAC411....70
EAC413....70
EAC451....70
EAC453....70
EAC455....70
EAC457....70
ED903....276
ED903D....276
ED913....276
ED913D....276
EH13942....16
EHBNC2....16
EHBNCSC....16
EHCAT62....16
EHRCA2....16
EHRCABNC....16
EHUSB2....16
EN3C**....43
EN3CR....42
EN3CRAUTO....42
EN3I**....45
EN3INS16....42
EN3INS20....42
EN3P**....44
EN3POS16....42
EN3POS20....42
EP903....276
EP903D....276
EP913....276
EP913D....276
EPS1PC1....291
EPS1PC2....291
EPS1PC3....291
EPS1SL1....291
EPS2PC1....291
EPS2PC2....291
EPS2PC3....291
EPS3PC1....291
EPS3PC2....291
EPS3PC3....291
EPS3SL1....291
EPS4PC1....291
EPS4PC2....291
EPS4PC3....291
F3FRAF....23
F3FSTF....23
F3MRAF....23
F3SM3F....23
FA11....94
FAL11....94
G3MS....26
G4MS....26
G6083....296
G6084....296
H101....275
H101PC....275
H102....275
H102PC....275
H103....275
H103D....275
H103PC....275
H201....275
H201PC....275
H202....275
H202PC....275
H203....275
H203D....275
H203PC....275
H3MS....26
H4MS....26
HP75BNC1....66
HP75BNC10....66
HP75BNC12....66
HP75BNC2....66
HP75BNC6....66
HP75BNC7....66
HP75BNC9....66
HPCC4F....38
HPCC4FRA....38
HPCI4F....38
HPCP*4....40
HPCPK112F....190
HPCPK112F1....190
HPCPK1B....190
HPCPK324F....190
HPCPK324F1....190
HPCPK3B....190
IBS10B02106AR....314
IBS10B04106AR....314
IBS10B06106AR....314
IBS10B08106AR....314
IBS10B10106AR....314
IBS10B12106AR....314
IBS15B02106AR....314
IBS15B04106AR....314
IBS15B06106AR....314
IBS15B08106AR....314
IBS15B10106AR....314
IBS15B12106AR....314
IBS20B02106AR....314
IBS20B04106AR....314
IBS20B06106AR....314
IBS20B08106AR....314
IBS20B10106AR....314
IBS20B12106AR....314
J3FS....26
J4MS....26
JP012000....207
JP012S32A....207
JP012S32B1....207
JP012S34B1....207
JP022000....207
JP022S32A....207
JP022S32B....207
JP022S34B....207
JP032000....207
JP032S32A....207
JP032S32B....207
JP032S34B....207
JP042000....207
JP042S32A....207
JP042S32B....207
JP042S34B....207
JP052000....207
JP052S32A....207
JP052S32B....207
JP052S34B....207
JP062000....207
JP062S32A....207
JP062S32B....207
JP062S34B....207
JP072000....207
JP072S32A....207
JP072S32B....207
JP072S34B....207
JP082000....207
JP082S32A....207
JP082S32B....207
JP082S34B....207
JP092000....207
JP092S32A....207
JP092S32B....207
JP092S34B....207
JP102000....207
JP102S32A....207
JP102S32B....207
JP102S34B....207
JP112000....207
JP112S32A....207
JP112S32B....207
JP112S34B....207
JP122000....207
JP122S32A....207
JP122S32B....207
JP122S34B....207
JP312000....210
JP322000....210
JP9902....207
JP9922....207
JP9942....207
JPD312000....210
JPD322000....210
K131....296
K255....5
K3FS....26
K459....163
K460....163
K4FS....26
L11....94
L112A....98
L112APC....98
L112B....98
L113B....98
L114B....98
L114BPC....98
L12A....94
L12B....94
L3MN....30
L4MN....30
L5MN....30

* Please visit the product pages on our website for the most up-to-date product information

L712A....134
L712RA....134
L722A....134
L722RA....134
LUS001....271
LUS001PC....271
LUS001ST....271
M111....97
M112A....97
M112APC....97
M112B....97
M112BPC....97
M113B....97
M113E....97
M113PPC1M....97
M114B....97
M114BPC....97
M114BPC1M....97
M3M....30
M4M....30
M5M....30
MBPK175T....201
MD10....249
MD15....249
MD3....249
MD6....249
MDPC2A....121
MDPC2AR....121
MDPC2ARA....121
MDSL2A....121
MDSL2ARA....121
MDSMT2ARATR....120
MDSMT2BRATR....120
MDSMT3BRATR....120
MDSMT4BRATR....120
ML112B....97
MN111....97
MN112A....97
MN112APC....97
MN112B....97
MN112BPC....97
MN113B....97
MN113BPC....97
MN113E....97
MN114B....97
MN114BPC....97
MN122A....97
MNL112B....97
MNL113B....97
MT331....83
MT332....83
MT332A....83
MT332B....83
MT332C....83
MT333....83
MT333A....84
MT333B....83
MT333E....83
MT334A....83
MT334B....83
MT334C....83
MT334E....83
MT334F....83
MT335....83
MT335A....84
MT336....83
MT336A....83
MT336B....83
MT336C....83
MT336D....83
MT336E....83
MT337....83
MT338....83
MT339....83
MT342B....83
MT343B....84
MT344B....83
MT346....83
MT346A....84
MT346B....84
MT346C....84
MT352A....83
MT354B....83
MT355....83
MT356C....83
MT357....83
MT388....85
MT389....85
MT48FN....184
MT48HN....184
MT48K1FN....182
MT48K1HN....182
MT48K1NN....182
MT48K1NS....182
MT48K3FN....182
MT48K3HN....182
MT48K3NN....182
MT48NN....184
MT48NS....184
MT52FN....184
MT52HN....184
MT52K1FN....182
MT52K1HN....182
MT52K1NN....182
MT52K1NS....182
MT52K3FN....182
MT52K3HN....182
MT52K3NN....182
MT52NN....184
MT52NS....184
MTP24K7....174
MTP48K1NO....166
MTP48K1NS....166
MTP48K3BPNS....174
MTP48K3NO....166
MTP48K3NS....166
MTP48K3PBNO....174
MTP48K3SNO....166
MTP52K3BPNO....174
MTPFA48K1NO....164
MTPFA48K1NS....164
MTPH48K1NO....171
MTPH48K1NS....171
MTPH48K3NO....171
MTPH48K3NS....171
MTPH48K3SNO....171
MVJ*75T....137
MVJ*NT....137
MVP32K1*75T....196
MVP32K1*NT....196
MVP32K3*75T....196
MVP32K3*NT....196
N111....98
N111PC....98
N111PCS....100
N112A....98
N112APC....98
N112APCS....100
N112B....98
N112BPC....98
N112BPCS....100
N113....98
N113B....98
N113BPC....98
N113BPCS....100
N114B....98
N114BPC....98
N114BPCS....100
N3MS....25
NL111....98
NL112A....98
NL112B....98
NL113B....98
NL114B....98
NL114BPC....98
NL114BPCS....100
P2290....230
P2315....230
P2316....230
P23491....271
P234913....271
P23492....271
P23493....271
P23494....271
P23495....271
P23497....271
P23498....271
P2456....230
P286301....91
P286302....91
P286304....91
P286305....91
P286307....91
P286308....91
P286401....91
P286402....91
P286404....91
P286405....91
P286407....91
P286408....91
P2912....297
P2936....270, 314
P2937....270, 314
P2938....270, 314
P2939....270, 314
P2940....270, 314
P2941....270, 314
P2942....270, 314
P2943....270, 314
P2951....270, 314
P2952....270, 314
P2953....270, 314
P2954....270, 314
P2955....270, 314
P2956....270, 314
P2957....270, 314
P2958....270, 314
P2979....314
P2992....314
P3F....8
P3M....8
P4F....8
P4M....8
P5F....8
P5M....8
PC12A....94
PC142A....110
PC712A....134
PC722A....134
PC732A....134
PCL712A....134
PCL722A....134
PD3F***....20
PD3M***....20
PJRAN1X1U01....126
PJRAN1X1U02....126
PJRAN1X1U03....126
PJRAN1X1U04....126
PJRAN2X1U01....126
PJRAN2X1U02....126
PJRAN3X1U01....126
PJRAN3X1U02....126
PJRAS1X1S01....126
PJRAS1X1S02....126
PJRAS1X1S03....126
PJRAS1X1S04....126
PJRAS1X2S01....126
PJRAS1X2S02....126
PJRAS1X3S01....126
PJRAS1X3S02....126
PJRAS1X3U01....126
PJRAS2X1S01....126
PJRAS2X1S02....126
PJRAS2X2S01....126
PJRAS3X1S01....126
PJRAS3X1S02....126
PJRAS3X2S01....126
PJRAS3X2S02....126
PJRAS4X2U01....126
PL102....278
PL103205....277
PL103705....277
PL106205....277
PL106705....277
PL111....278
PL112205....277
PL112705....277
PL123705....277
PL126205....277
PL126705....277
PL202....278
PL203205....277
PL203705....277
PL206205....277
PL206705....277
PL211....278
PL212205....277
PL212705....277
PL226205....277
PL226705....277
PL303....278
PL305....278
PL308....278
PL403205....277
PL403705....277
PL406205....277
PL406705....277
PL412205....277
PL412705....277
PL501....278
PL503....278
PL503205....277
PL504....278
PL505....278
PL506205....277
PL506705....277
PL508....278
PL512....278
PL512205....277
PL512705....277
PL513....278
PL703705....277
PL706205....277
PL706705....277
PL712205....277
PL712705....277
PL803205....277
PL803705....277
PL806205....277
PL806705....277
PL812205....277
PL812705....277
PL9105....278
PL9205....278
PPT....163
PQG3F***....18
PQG3M***....18
PT1LA....163
PT2B....163
QG3F....25
QG3FD....25
QG3FDPC....25
QG3M....25
QG4F....25

® Registered trademark of Switchcraft, Inc.

Note: Contact your Switchcraft Representative for price and delivery

* Please visit the product pages on our website for the most up-to-date product information

QG4FD....25
QG4M....25
QG5F....25
QG5FD....25
QG5M....25
QG6F....25
QG6FD....25
QG6M....25
QG7F....25
QG7FD....25
QG7M....25
QGP322....4
QGP323....4
QGP326....10
QGP327....10
QGP362....9
QGP363....9
QGPK116FB....188
QGPK116MB....188
QGPK18M8FB....188
QGPK1B....188
QGPK332MFB....188
QGPK3B....188
R3FZ....8
R3MZ....8
R4FZ....8
R4MZ....8
R5FZ....8
R5MZ....8
R6FZ....8
R6MZ....8
R7FZ....8
R7MZ....8
RA200....256
RA202....257
RA205....256
RA207....257
RA208....257
RA217....257
RA35....255
RA353....247
RA354....247
RA355....247
RA356....246-247
RA357....247
RA358....247
RA359....247
RA373....247
RA374....246-247
RA375....247
RA376....247
RA377....247
RA378....247
RA379....247
RA40....255
RA41....255
RA49B11....103
RA49B12A....103
RA49B12B....103
RA49B14B....103
RA49C11....103
RA49C12A....103
RA49C12B....103
RA49C14B....103
RA700....254
RA70B11....103
RA70B12A....103
RA70B12B....103
RA70B14B....103
RA70C11....103
RA70C12A....103
RA70C12B....103
RA70C14B....103
RA710....254
RA712A....241
RA722A....241
RA760....241
RA765....241
RA850....253
RAPC322....78
RAPC712....130
RAPC722....130
RAPC732....130
RAPC732OF....130
RAPC742....130
RAPC742OF....130
RAPC752....130
RAPC752S....130
RASH712....130
RASH722....130
RASH732....130
RASM712....130
RASM722....130
RASM732....130
RASM742TR....130
RASM752STR....130
RASM752TR....130
RN111PC....103
RN112APC....103
RN112BPC....103
RN113BPC....103
RN113FPC....103
RN114BPC....103
RS422H48N081....191
RS422H4N081....192
RS422H4N161....191
RS422H4N162....191-192
RS422H4N242....191-192
RS422PH4N081....191-192
RS422PH4N161....191
RS422PH4N162....191-192
RS422PH4N242....191-192
RS422PV4N081....191-192
RS422PV4N161....191
RS422PV4N162....191-192
RS422PV4N242....191-192
RS422PV4N322....191-192
RS422V4N081....191-192
RS422V4N161....191
RS422V4N162....191-192
RS422V4N242....191-192
RS422V4N322....191-192
RTT34B01....91
RTT34B02....91
RTT34B04....91
RTT34B05....91
RTT34B07....91
RTT34B08....91
RTT8701....91
RTT8702....91
RTT8704....91
RTT8705....91
RTT8707....91
RTT8708....91
S11....94
S112BPC....98
S112BPCS....100
S12A....94
S12B....94
S13B....94
S230....153
S250....151
S260....151
S267....151
S280....146, 151
S3F5M....29
S3FM....28
S4FM....28
S580....146
S5F3M....29
S5FM....28
S760....162
S760K....162
S761K....162
S765....162
S765K....162
S766K....162
S830....108
SL01....61
SL02....61
SL03....61
SL04....61
SL05....61-62
SL102F....63
SL102M....63
SL103F....63
SL103M....63
SL104F....63
SL104M....63
SL105F....63
SL105M....63
SL172F....63
SL173F....63
SL173M....63
SL174F....63
SL174M....63
SL175F....63
SL175M....63
SL18....64
SL182F....64
SL182M....64
SL183F....64
SL183M....64
SL184F....64
SL184M....64
SL185F....64
SL185M....64
SL402F....62
SL402M....62
SL403F....62
SL403M....62
SL404F....62
SL404M....62
SL405F....62
SL405M....62
SL412F....62
SL413F....62
SL413M....62
SL414F....62
SL414M....62
SL415F....62
SL415M....62
SMD*FRA***....53
SN37A11....103
SN37A12A....103
SN37A12B....103
SN37A14B....103
SN49A11....103
SN49A12A....103
SN49A12B....103
SN49A14B....103
SN49B11....103
SN49B12A....103
SN49B12B....103
SN49B14B....103
SN49C11....103
SN49C12A....103
SN49C12B....103
SN49C14B....103
SN70B11....103
SN70B12A....103
SN70B12B....103
SN70B14B....103
SN70C11....103
SN70C12A....103
SN70C12B....103
SN70C14B....103
SR00....5
SR01....5
SR02....5
SR03....5
SR04....5
SR05....5
SR06....5
SR07....5
SR08....5
SR09....5
ST121....257
ST125....256
ST131....257
ST200....257
ST230....257
ST303....247
ST304....247
ST305....247
ST306....247
ST307....246-247
ST308....247
ST309....247
ST323....247
ST324....246-247
ST325....247
ST326....247
ST327....247
ST328....247
ST329....247
ST35....255
ST40....255
ST60....255
ST600....250
ST603....250
ST604....250
ST605....250
ST626....250
ST700....254
ST710....254
ST740....254
ST750....254
ST760....241
ST765....241
ST850....253
ST90....258
ST900....245
ST900F....245
ST91....258
SUSB....56
T127410....297
T12742....297
T12745....297
T3F....9
T3FL....9
T3FLM....9
T3FM....9
T4F....9
T4FL....9
T4FLM....9
T4FM....9
TA01....31
TA02....31
TA03....31
TA04....31
TA05....31
TA06....31
TA3F....31-32
TA3FB....32
TA3FL....32
TA3FLB....32
TA3M....31-32
TA3MB....32
TA3ML....32
TA4F....32
TA4FB....32
TA4FL....32
TA4FLB....32

* Please visit the product pages on our website for the most up-to-date product information

TA4M 32
TA4MB 32
TA4ML 32
TA5F 32
TA5FL 32
TA5FLB 32
TA5M 32
TA5ML 32
TA5MLB 32
TA6FL 32
TA6ML 32
TA7FL 32
TA7ML 32
TA8FL 32
TA8ML 32
TAD2 142
TAD3 142
TB3M 33
TB3MB 33
TB4M 33
TB4MB 33
TB5M 33
TB5MB 33
TB6M 33
TB7M 33
TB8M 33
TBA03 37
TBA04 37
TBA05 37
TBA06 37
TLP4 33
TLP6 33
TQG3F 37
TQG3M 37
TQG4F 37
TQG4M 37
TQG5F 37
TQG5M 37
TQG6F 37
TQG6M 37
TR1PC 121
TR2A 121
TRA**M 34
TRA3M 34
TRA6M 34
TRA6MF 34
TRG4M 33
TRGS4F 33
TT** 267
TT101 265
TT102 265
TT103 265
TT104 265
TT105 265
TT106 265
TT107 265
TT108 265
TT109 265
TT110 265
TT111 265
TT112 265
TT113 265
TT114 265
TT115 265
TT121 265
TT122 265
TT123 265
TT124 265
TT125 265
TT126 265
TT127 265
TT128 265
TT129 265
TT130 265
TT131 265
TT132 265
TT133 265
TT134 265
TT135 265
TT141 265
TT142 265
TT143 265
TT144 265
TT145 265
TT146 265
TT147 265
TT148 265
TT149 265
TT150 265
TT151 265
TT152 265
TT153 265
TT154 265
TT155 265
TT161 265
TT162 265
TT163 265
TT164 265
TT165 265
TT166 265
TT167 265
TT168 265
TT169 265
TT170 265
TT171 265
TT172 265
TT173 265
TT174 265
TT175 265
TT201 234
TT202 234
TT203 234
TT204 234
TT205 234
TT206 234
TT207 234
TT208 234
TT209 234
TT210 234
TT251 143
TT252 143
TT253 ....90, 143
TT253N 143
TT253NC 143
TT254 143
TT254N 143
TT254NC 143
TT261 144
TT263 ....90, 144
TT281 265
TT282 265
TT283 265
TT284 265
TT289 265
TT2W48MCF1 223
TT2W48MCN1 223
TT2W48VCF1 223
TT2W48VCN1 223
TT30 87
TT30FM 87
TT31 87
TT31DC 87
TT31FM 87
TT31FMDC 87
TT32A 87
TT32ADC 87
TT32AFM 87
TT32AFMDC 87
TT32B 87
TT32BDC 87
TT32BFM 87
TT32BFMDC 87
TT32C 87
TT32CDC 87
TT32CFM 87
TT32CFMDC 87
TT33 87
TT33B 87
TT33BDC 87
TT33BFM 87
TT33BFMDC 87
TT33DC 87
TT33FM 87
TT33FMDC 87
TT34A 87
TT34ADC 87
TT34AFM 87
TT34AFMDC 87
TT34B 87
TT34BDC 87
TT34BFM 87
TT34BFMDC 87
TT34C 87
TT34CDC 87
TT34CFM 87
TT34CFMDC 87
TT34F 87
TT34FDC 87
TT35 87
TT35DC 87
TT35FM 87
TT35FMDC 87
TT36 87
TT36A 87
TT36ADC 87
TT36AFM 87
TT36AFMDC 87
TT36B 87
TT36BDC 87
TT36C 87
TT36CDC 87
TT36CFM 87
TT36CFMDC 87
TT36DC 87
TT36FM 87
TT36FMDC 87
TT401 230
TT403 230
TT404 230
TT405 230
TT408 230
TT413 230
TT4506 230
TT45106 230
TT45124 230
TT45148 230
TT45206 230
TT45224 230
TT45248 230
TT45306 230
TT45324 230
TT45348 230
TT45406 230
TT45424 230
TT45448 230
TT45524 230
TT45548 230
TT45806 230
TT45824 230
TT45848 230
TT4W24MCF1 223
TT4W24MCN1 223
TT4W24VCF1 223
TT4W24VCN1 223
TT501 236
TT502 236
TT503 236
TT504 236
TT505 212
TT506 212
TT507 212
TT508 212
TT509 212
TT51 ....215, 218
TT510 ....230, 234
TT5102000 217
TT5102S31 217
TT5102S32A 217
TT5102S32B 217
TT5102S33B 217
TT5102S34B 217
TT5102W31 217
TT5102W32A 217
TT5102W32B 217
TT5102W33B 217
TT5102W34B 217
TT511 212
TT5121 233
TT5122 233
TT5123 233
TT5124 233
TT5125 233
TT5128 233
TT5131 233
TT5132 233
TT5133 233
TT5134 233
TT5135 233
TT5138 233
TT5141 233
TT5142 233
TT5143 233
TT5144 233
TT5145 233
TT5148 233
TT5151 234
TT5152 234
TT5155 234
TT516 237
TT517 237
TT518 237
TT519 236
TT52 218
TT520 236
TT5202000 217
TT5202S31 217
TT5202W34B 217
TT521 236
TT53 ....215, 220
TT5302000 219
TT5302S95 219
TT5302S96 219
TT5302W95 219
TT5302W96 219
TT54 ....215, 220
TT5402000 219
TT5402S95 219
TT5402W96 219
TT55 ....215, 218
TT5502S31 217
TT5502W34B 217
TT552000 217
TT56 ....215, 218
TT5602000 217
TT5602S31 217
TT5602W34B 217
TT57 220
TT58 ....215, 220
TT59 ....215, 220
TT5902000 219
TT5902S89 219
TT5902W89 219
TT60 ....215, 220
TT6002000 219

® Registered trademark of Switchcraft, Inc.

Note: Contact your Switchcraft Representative for price and delivery

* Please visit the product pages on our website for the most up-to-date product information

TT6002S89....219
TT6002W89....219
TT61....215, 220
TT6102000....219
TT6102S89....219
TT6102W89....219
TT62....215, 220
TT6202000....219
TT6202S89....219
TT6202W89....219
TT631....87
TT632A....87
TT632B....87
TT632C....87
TT633....87
TT633B....87
TT634A....87
TT634B....87
TT634C....87
TT635....87
TT636....87
TT636A....87
TT636C....87
TT6W48MCF1....223
TT6W48MCN1....223
TT6W48VCF1....223
TT6W48VCN1....223
TT722....264
TT724....264
TT726....264
TT727....264
TT728....264
TT729....264
TT741....264
TT741N0....264
TT742....264
TT742N0....264
TT744....264
TT744N0....264
TT746....264
TT746N0....264
TT747....264
TT747N0....264
TT748....264
TT749....264
TT861....264
TT862....264
TT864....264
TT866....264
TT867....264
TT868....264
TT869....264
TT89....89
TT89DC....89
TT89FM....89
TT89FMDC....89
TT91001....216
TT91002....216
TT91003....216
TT91004....216
TT91005....216
TT91008....216
TT91011....216
TT91201....216
TT91202....216
TT91203....216
TT91204....216
TT91205....216
TT91208....216
TT91211....216
TT91401....216
TT91402....216
TT91403....216
TT91404....216
TT91405....216
TT91408....216
TT91411....216
TT92001....216
TT92002....216
TT92003....216
TT92004....216
TT92005....216
TT92008....216
TT92011....216
TT92201....216
TT92202....216
TT92203....216
TT92204....216
TT92205....216
TT92208....216
TT92211....216
TT92401....216
TT92402....216
TT92403....216
TT92404....216
TT92405....216
TT92408....216
TT92411....216
TT93001....216
TT93002....216
TT93003....216
TT93004....216
TT93005....216
TT93008....216
TT93011....216
TT93301....216
TT93302....216
TT93303....216
TT93304....216
TT93305....216
TT93308....216
TT93311....216
TT93601....216
TT93602....216
TT93603....216
TT93604....216
TT93605....216
TT93608....216
TT93611....216
TT95....90
TT95DC....90
TT95FM....90
TT95FMDC....90
TT96EDACNO....178
TT96EDACNS....178
TT96FM....90
TT96FMDC....90
TTD**....267
TTD5102000....217
TTD5102S31....217
TTD5102W34B....217
TTD5202000....217
TTD520231....217
TTD5202W34B....217
TTD5302000....219
TTD5302S95....219
TTD5302W96....219
TTD5402000....219
TTD5402S95....219
TTD5402W96....219
TTD5902000....219
TTD5902S89....219
TTD5902W89....219
TTD6002000....219
TTD6002S89....219
TTD6002W89....219
TTEZN***....177
TTP96ASFN....186
TTP96ASHN....186
TTP96ASNN....186
TTP96K1FN....180
TTP96K1HN....180
TTP96K1NN....180
TTP96K3BPNS....174
TTP96K3FN....180
TTP96K3HN....180
TTP96K3NN....180
TTP96K3NS....168
TTP96K5BPNS....174
TTPFA96K1NO....164
TTPFA96K1NS....164
TTPH96K1NO....171
TTPH96K1NS....171
TTPH96K3NO....171
TTPH96K3NS....171
TY3F....37
TY3FPC....37
TY4F....37
TY4FPC....37
TY5F....37
TY5FPC....37
TYEF01....37
TYEF02....37
TYEF03....37
TYEF04....37
TYEF05....37
TYEF08....37
TYEF11....37
UJ1....93
UJ2A....93
UJ2B....93
UJ4B....93
US001....271
US001PC....271
US001ST....271
VAPK1HD*75T....199-200
VAPK1HD*NT....199
VAPK1SD*75T....199
VAPK1SD*NT....199
VAPK3HD*75T....199-200
VAPK3HD*NT....199
VAPK3SD*75T....199
VAPK3SD*NT....199
VJHD*75T....136
VJHD*75TX....195
VJHD*NT....136
VJHD*NTX....195
VJSD*75T....136
VJSD*75TX....195
VJSD*NT....136
VJSD*NTX....195
VMAFN....199
VMP**....266
VMVHD*75T....199
VMVHD*NT....199
VMVSD*75T....199
VMVSD*NT....199
VP**....266
VPP24K1HD*75T....193
VPP24K1HD*NT....193
VPP24K1SD*75T....193
VPP24K1SD*NT....193
VPP24K3HD*75T....193
VPP24K3HD*NT....193
VPP24K3SD*75T....193
VPP24K3SD*NT....193
VPP26K1HD*75T....193
VPP26K1HD*NT....193
VPP26K1SD*75T....193
VPP26K1SD*NT....193
VPP26K3HD*75T....193
VPP26K3HD*NT....193
VPP26K3SD*75T....193
VPP26K3SD*NT....193
W11003....231
W11003L....231
W11006....231
W11006L....231
W11012....231
W11012L....231
W11203....231
W11203L....231
W11206....231
W11206L....231
W11212....231
W11212L....231
W1332A....203
W1334B....203
W1532A301....203
W1532B301....203
W1534B....203
W1534B301....203
W1632B....212
W1634B....212
W1789....212
W2532A....205
W2533B....205
W2732A301....205
W2732B....205
W2732B301....205
W2734B301....205
W2789....205
W3M....25
W4M....25
WA1634B....212
WAD1634B....212
WB1650....212
WB1795....212
WB1796....212
WBD1634B....212
WBD1650....212
WBD1795....212
WC1634B....212
WCD1634B....212
WCMT331....83
WCMT332A....84
WCMT332B....83
WCMT333....84
WCMT334B....83
WCMT335....84
WCMT335A....84
WCMT336....83
WCMT336A....83
WCMT336B....84
WCMT336C....83
WCMT336D....83
WCMT336E....84
WD1632B....212
WD1634B....212
WD1789....212
WMT331....83
WMT332A....84
WMT332B....83
WMT332C....84
WMT333....84
WMT333B....84
WMT333E....84
WMT334A....84
WMT334B....83
WMT334C....84
WMT334E....84
WMT334F....84
WMT335....84
WMT335A....84
WMT336....83
WMT336A....83
WMT336B....84
WMT336C....83
WMT336D....83
WMT336E....84
WMT342B....83
WMT344B....84
WMT388....85
WMT389....85

* Please visit the product pages on our website for the most up-to-date product information

WTT31 87
WTT31DC 87
WTT31FM 87
WTT31FMDC 87
WTT32A 87
WTT32ADC 87
WTT32AFM 87
WTT32AFMDC 87
WTT32B 87
WTT32BDC 87
WTT32BFM 87
WTT32BFMDC 87
WTT32C 87
WTT32CDC 87
WTT32CFM 87
WTT32CFMDC 87
WTT33 87
WTT33B 87
WTT33BDC 87
WTT33BFM 87
WTT33BFMDC 87
WTT33DC 87
WTT33FM 87
WTT33FMDC 87
WTT34A 87
WTT34ADC 87
WTT34AFM 87
WTT34AFMDC 87
WTT34B 87
WTT34BDC 87
WTT34BFM 87
WTT34BFMDC 87
WTT35 87
WTT35DC 87
WTT35FM 87
WTT35FMDC 87
WTT36 87
WTT36A 87
WTT36ADC 87
WTT36AFM 87
WTT36AFMDC 87
WTT36C 87
WTT36CDC 87
WTT36CFM 87
WTT36CFMDC 87
WTT36DC 87
WTT36FM 87
WTT36FMDC 87
WTT631 87
WTT632A 87
WTT632B 87
WTT632C 87
WTT633 87
WTT633B 87
WTT634A 87
WTT634B 87
WTT634C 87
WTT635 87
WTT636 87
WTT636A 87
WTT636C 87
WTT89 89
WTT89DC 89
WTT89FM 89
WTT89FMDC 89
WTT95 90
WTT95DC 90
WTT95FM 90
WTT95FMDC 90
WTT96FM 90
WTT96FMDC 90
X1332A 203
X1332B 203
X1334B 203
X1532A 203
X1532B301 203
X1534B 203
X1542B315 203
X21248 317
X2432A 205
X2432B 205
X2434B 205
X2532A 205
X2532B 205
X2534B 205
X2732A 205
X2732A301 205
X2732B 205
X2732B301 205
X2734B 205
X2734B301 205
X2832A 205
X2932A 205
X51248 317
XMT332A 84
XMT332B 84
XMT334B 84
Y21248 317
Y28248 317
Y3F 22
Y3FD 22
Y3FPC 22
Y3MPC 22
Y51248 317
YEF01 22
YEF02 22
YEF03 22
YEF04 22
YEF05 22
YEF08 22
YMT332A 84
YMT332B 84
YMT334B 84
Z15J 108
Z21248 317
Z28248 317
Z51248 317

® Registered trademark of Switchcraft, Inc.

Note: Contact your Switchcraft Representative for price and delivery

Общество с ограниченной ответственностью «МосЧип» ИНН 7719860671 / КПП 771901001
Адрес: 105318, г.Москва, ул.Щербаковская д.3, офис 1107

Данный компонент на территории Российской Федерации

Вы можете приобрести в компании MosChip.

Для оперативного оформления запроса Вам необходимо перейти по данной ссылке:

http://moschip.ru/get-element

Вы можете разместить у нас заказ для любого Вашего проекта, будь то серийное производство или разработка единичного прибора.

В нашем ассортименте представлены ведущие мировые производители активных и пассивных электронных компонентов.

Нашей специализацией является поставка электронной компонентной базы двойного назначения, продукции таких производителей как XILINX, Intel (ex.ALTERA), Vicor, Microchip, Texas Instruments, Analog Devices, Mini-Circuits, Amphenol, Glenair.

Сотрудничество с глобальными дистрибьюторами электронных компонентов, предоставляет возможность заказывать и получать с международных складов практически любой перечень компонентов в оптимальные для Вас сроки.

На всех этапах разработки и производства наши партнеры могут получить квалифицированную поддержку опытных инженеров.

Система менеджмента качества компании отвечает требованиям в соответствии с ГОСТ Р ИСО 9001, ГОСТ РВ 0015-002 и ЭС РД 009

Офис по работе с юридическими лицами:

105318, г.Москва, ул.Щербаковская д.3, офис 1107, 1118, ДЦ «Щербаковский»

Телефон: +7 495 668-12-70 (многоканальный)

Факс: +7 495 668-12-70 (доб.304)

E-mail: info@moschip.ru

Skype отдела продаж:
moschip.ru
moschip.ru_4
moschip.ru_6
moschip.ru_9