Data Sheet, Rev. 2
September 2001

R2860A Digital Receiver OC-192/STM-64

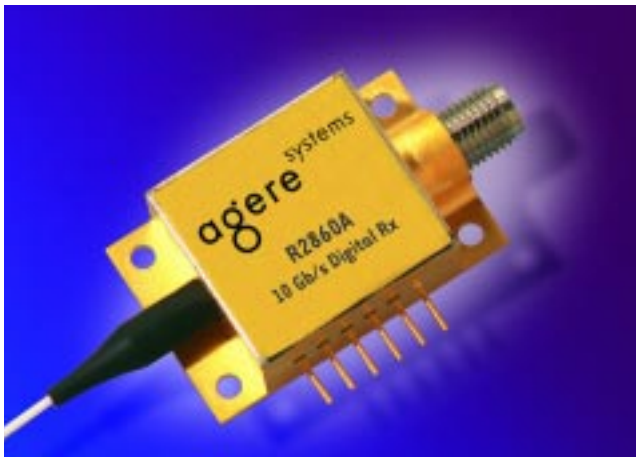

Features

- High sensitivity, –20 dBm typical
- Wide dynamic range, 2 dBm overload typical
- High transimpedance, 1200 Ω typical
- Hermetically sealed
- Qualified in accordance with *Telcordia Technologies*™ TR-NWT-000468 requirement

Applications

- 10 Gbits/s short, intermediate, and long-haul systems
- SONET/SDH equipment
- Datacom equipment

Description

The R2860A receiver module incorporates a high-speed planar PIN diode and a GaAs PHEMT preamplifier to provide exceptionally high performance. The unit provides high bandwidth and sensitivity to operate with long, dispersive fibers, plus wide dynamic range for operation over a variety of loss budgets. High transimpedance coupled with a nonquantizing limiting buffer output provides high gain while limiting the maximum output signal swing, thereby simplifying the interface to subsequent stages.

Agere Systems Inc. offers several 1R and 2R high-speed receiver components for 10 Gbits/s and 12.5 Gbits/s applications. APD and PIN versions are available in a 6-pin hermetic package with coaxial output. In addition, Agere Systems also offers a PIN receiver with coplanar waveguide in a multisource agreement form-factor or a smaller, space-sensitive package. For more information about the complete line of high-speed receiver products, please visit the Agere Systems' website at www.agere.com/opto.

Absolute Maximum Ratings

Stresses in excess of the absolute maximum ratings can cause permanent damage to the device. These are absolute stress ratings only. Functional operation of the device is not implied at these or any other conditions in excess of those given in the operational sections of the data sheet. Exposure to absolute maximum ratings for extended periods can adversely affect device reliability.

Parameter	Symbol	Min	Max	Unit
Operating Temperature Range	T_{OP}	–5	70	°C
Storage Case Temperature Range	T_{stg}	–40	85	°C
Preamp Supply Voltage	V_{CC}	—	12	V
Photodiode Bias Voltage	V_{PD}	—	20	V
Optical Input Power	P_{IN}	—	4	dBm

Electrical/Optical Characteristics

Table 1. Electrical and Optical Characteristics (25 °C Case Temperature)

Parameter	Symbol	Min	Typ	Max	Unit
Optical Wavelength Range	λ	1280	—	1580	nm
Sensitivity (10^{-10} BER, PRBS 2^{23} – 1)	—	—	–20	–18	dBm
Overload (10^{-13} BER, PRBS 2^{23} – 1)	—	0	2	—	dBm
Responsivity	R	0.7	0.8	—	A/W
Dark Current	I_D	—	—	1	nA
High-Frequency Cutoff	—	8.0	9.0	—	GHz
Low-Frequency Cutoff	—	—	—	30	kHz
Transimpedance	Z	800	1200	—	Ω
Maximum ac Output Voltage Swing	—	—	450	—	mVp-p
RF Output Return Loss* (0.1 GHz—10 GHz)	RL_{RF}	—	—	10	dB
Optical Return Loss	RL	27	—	—	dB
Logic Sense	—	—	Noninverting	—	—
Preamp Supply Voltage	(Vcc)	7.6	8.0	8.4	V
Photodiode Supply Voltage	V_{PD}	7	8	12	V
Supply Current	I_{CC}	—	80	120	mA

* External blocking capacitor required.

Pin Information

Table 2. Pin Descriptions

Pin No.	Description
1	NC
2	8 V (V_{CC})
3	8 V (V_{PD})
4	NC
5	NC
6	Ground

Block Diagram

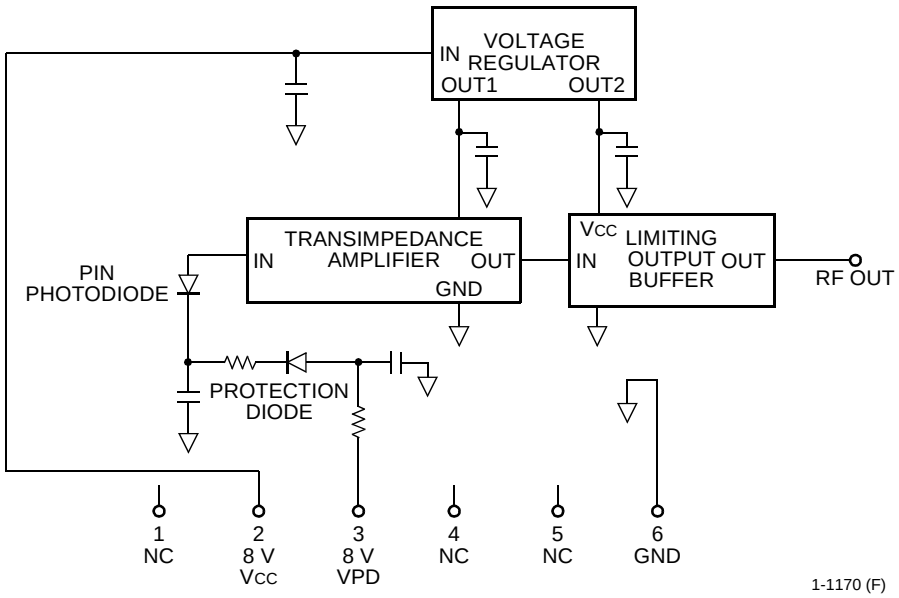

Characteristic Curve

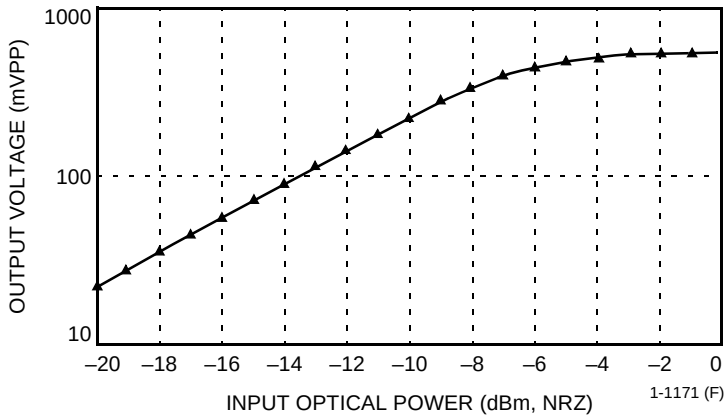

Figure 1. R2860A Typical Electrical Output Voltage vs. Optical Input Power

Outline Diagram

Dimensions are in inches and (millimeters).

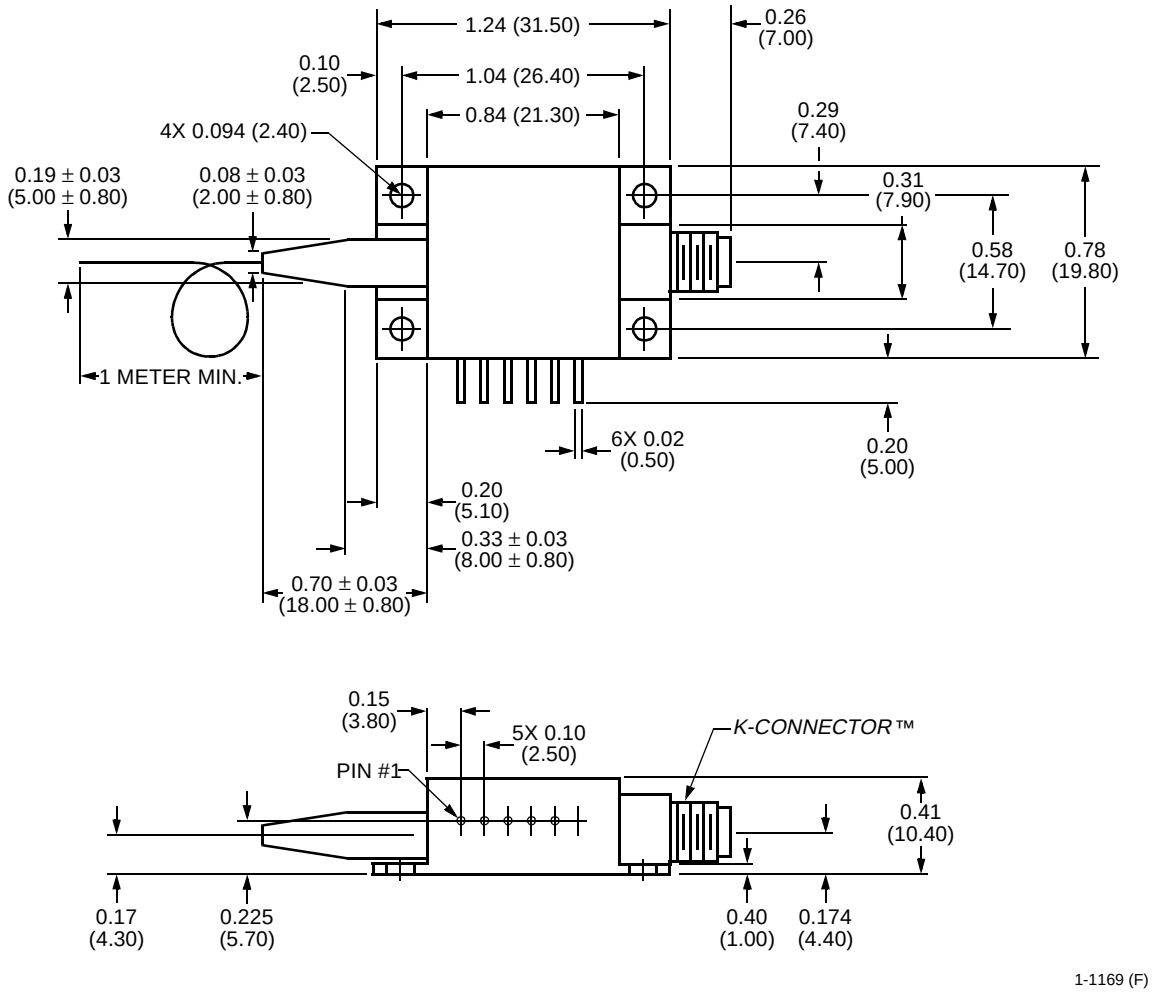

Note: External dc block required on RF output.

Ordering Information

Table 3. Ordering Information [1]

Device Code	Description	Connector	Pigtail	Comcode
R2860A023	Digital Receiver, 800 Ω min. TIA gain, dc-coupled output	FC/SPC, Standard	*SMF-28*™ (1 m, min)	108870080
R2860A040	Digital Receiver, 800 Ω min. TIA gain, dc-coupled output	SC/UPC	*SMF-28* (1 m, min)	108870098
R2860A050	Digital Receiver, 800 Ω min. TIA gain, dc-coupled output	LC	*SMF-28* (1 m, min)	108870106

1. Other options available. For additional ordering information, please contact an account manager at Opto West, Agere Systems Inc., 1-800-362-3891 (for sales staff, please press option 2).

Telcordia Technologies is a trademark of Telcordia Technologies, Inc.
K-Connector is a trademark of Anritsu Company.
SMF-28 is a trademark of Corning Incorporated.

For additional information, contact your Agere Systems Account Manager or the following:

INTERNET:	**http://www.agere.com**
E-MAIL:	**docmaster@agere.com**
N. AMERICA:	Agere Systems Inc., 555 Union Boulevard, Room 30L-15P-BA, Allentown, PA 18109-3286
	1-800-372-2447, FAX 610-712-4106 (In CANADA: **1-800-553-2448**, FAX 610-712-4106)
ASIA:	Agere Systems Hong Kong Ltd., Suites 3201 & 3210-12, 32/F, Tower 2, The Gateway, Harbour City, Kowloon
	Tel. (852) 3129-2000, FAX (852) 3129-2020
	CHINA: **(86) 21-5047-1212** (Shanghai), **(86) 10-6522-5566** (Beijing), **(86) 755-695-7224** (Shenzhen)
	JAPAN: **(81) 3-5421-1600** (Tokyo), KOREA: **(82) 2-767-1850** (Seoul), SINGAPORE: **(65) 778-8833**, TAIWAN: **(886) 2-2725-5858** (Taipei)
EUROPE:	**Tel. (44) 7000 624624**, FAX (44) 1344 488 045

Agere Systems Inc. reserves the right to make changes to the product(s) or information contained herein without notice. No liability is assumed as a result of their use or application.

Copyright © 2001 Agere Systems Inc.
All Rights Reserved

September 2001
DS00-274OPTO-2 (Replaces DS00-274OPTO-1)

Общество с ограниченной ответственностью «МосЧип» ИНН 7719860671 / КПП 771901001
Адрес: 105318, г.Москва, ул.Щербаковская д.3, офис 1107

Данный компонент на территории Российской Федерации

Вы можете приобрести в компании MosChip.

Для оперативного оформления запроса Вам необходимо перейти по данной ссылке:

http://moschip.ru/get-element

Вы можете разместить у нас заказ для любого Вашего проекта, будь то серийное производство или разработка единичного прибора.

В нашем ассортименте представлены ведущие мировые производители активных и пассивных электронных компонентов.

Нашей специализацией является поставка электронной компонентной базы двойного назначения, продукции таких производителей как XILINX, Intel (ex.ALTERA), Vicor, Microchip, Texas Instruments, Analog Devices, Mini-Circuits, Amphenol, Glenair.

Сотрудничество с глобальными дистрибьюторами электронных компонентов, предоставляет возможность заказывать и получать с международных складов практически любой перечень компонентов в оптимальные для Вас сроки.

На всех этапах разработки и производства наши партнеры могут получить квалифицированную поддержку опытных инженеров.

Система менеджмента качества компании отвечает требованиям в соответствии с ГОСТ Р ИСО 9001, ГОСТ РВ 0015-002 и ЭС РД 009

Офис по работе с юридическими лицами:

105318, г.Москва, ул.Щербаковская д.3, офис 1107, 1118, ДЦ «Щербаковский»

Телефон: +7 495 668-12-70 (многоканальный)

Факс: +7 495 668-12-70 (доб.304)

E-mail: info@moschip.ru

Skype отдела продаж:
moschip.ru
moschip.ru_4
moschip.ru_6
moschip.ru_9