THIS DRAWING IS UNPUBLISHED. RELEASED FOR PUBLICATION -,- .
© COPYRIGHT 2010 BY TYCO ELECTRONICS CORPORATION. ALL RIGHTS RESERVED.

LOC	DIST
DW	—

REVISIONS

P	LTR	DESCRIPTION	DATE	DWN	APVD
	A4	REVISED (ECR-12-012566) RELEASED PN 5-1734324-9	10AUG'12	E.L.	W.K.

LED SCHEMATIC	
LED 2	LED 1
9+ ▷ −10	11+ ▷ −12

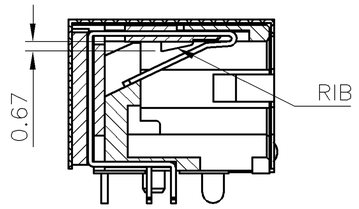

SECTION A–A

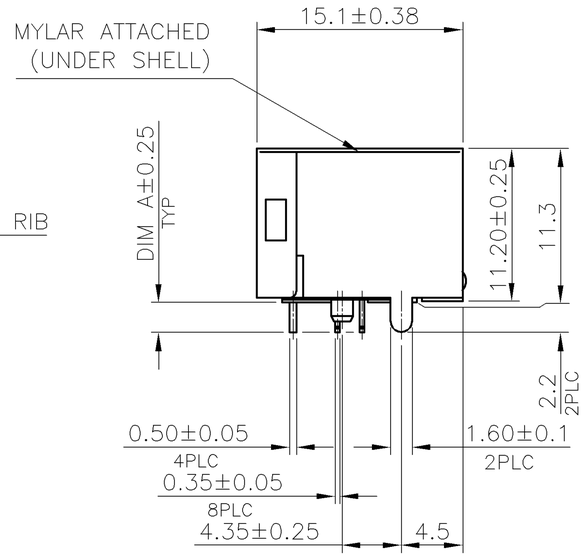

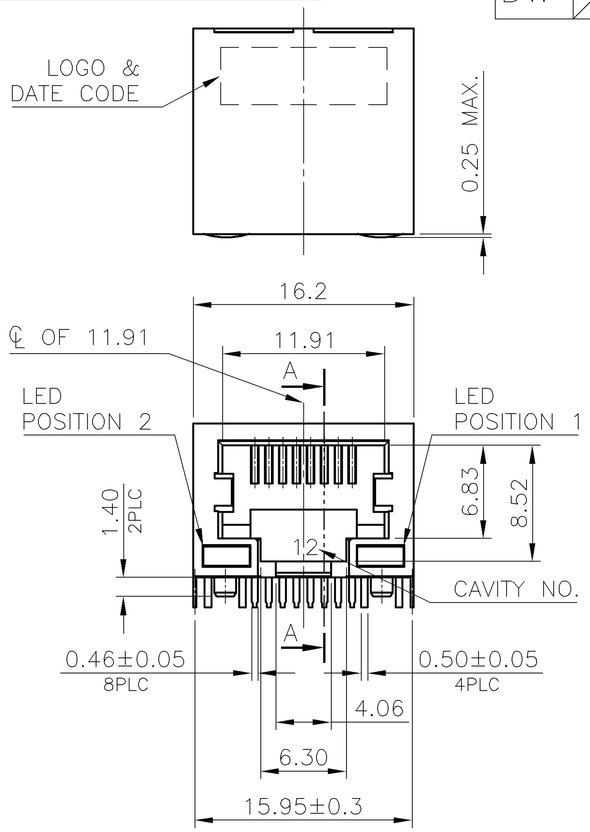

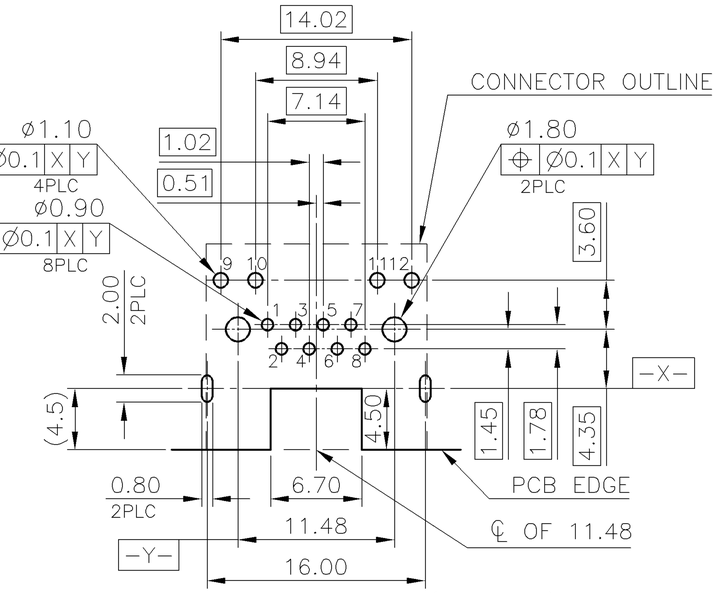

RECOMMENDED PCB LAYOUT (TOP VIEW)
PCB THICKNESS: 1.6mm, TOLERANCE: ±0.05

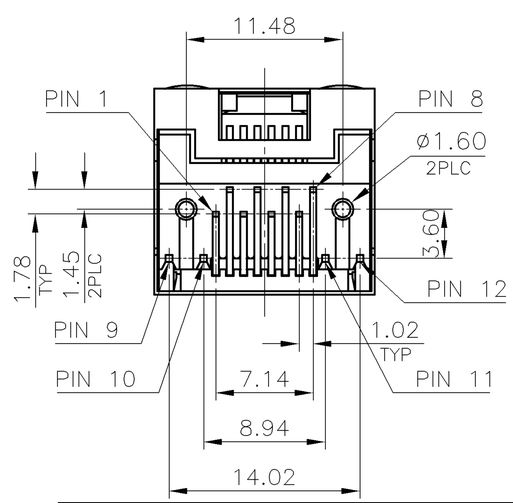

	PACKAGE	DIM A	POSITION 2 INDICATOR COLOR	POSITION 1 INDICATOR COLOR	MIN. GOLD THICKNESS	PART NUMBER
6 OBSOLETE	REEL	2.2	YELLOW	GREEN	1.27um[50u"]	1-1734324-8
					0.762um[30u"]	~~1-1734324-7~~
					0.381um[15u"]	~~1-1734324-6~~
					0.152um[6u"]	~~1-1734324-5~~
			GREEN	YELLOW	1.27um[50u"]	~~1-1734324-4~~
					0.762um[30u"]	1-1734324-3
					0.381um[15u"]	1-1734324-2
					0.152um[6u"]	~~1-1734324-1~~
6 OBSOLETE	TRAY		YELLOW	GREEN	1.27um[50u"]	~~1734324-8~~
					0.762um[30u"]	1734324-7
					0.381um[15u"]	1734324-6
					0.152um[6u"]	1734324-5
6 OBSOLETE			GREEN	YELLOW	1.27um[50u"]	~~1734324-4~~
					0.762um[30u"]	1734324-3
6 OBSOLETE					0.381um[15u"]	~~1734324-2~~
					0.152um[6u"]	1734324-1

NOTE:

1. MATERIAL:
   1.1 HOUSING: PA46, WITH 30% GF, UL94 V-0, BLACK COLOR.
   1.2 INSERT HOUSING: PA46, WITH 30% GF, UL94 V-0, BLACK COLOR.
   1.3 CONTACTS: PHOSPHOR BRONZE.
   1.4 SHELL: BRASS.
   1.5 LED SOLDER TAIL: STEEL.
   1.6 MYLAR: SILICONE POLYMER.
2. FINISH:
   2.1 CONTACTS: (SEE TABLE) GOLD PLATED ON CONTACT AREA.
   GOLD FLASH ON SOLDER TAIL.
   1.27um [50u"] MIN. NICKEL UNDERPLATED OVERALL.
   2.2 SHELL: 0.508um [20u"] MIN. NICKEL PLATED.
   2.3 LED: 1.02um [40u"] COPPER UNDERPLATED OVERALL.
   1.27um [50u"] NICKEL OVERALL.
   1.27um [50u"] SILVER ON BONDING AREA.
   2.54um [100u"] BRIGHT-TIN ON SOLDER AREA.
3. LED MUST BE REFLOW COMPATIBLE TO FOLLOWING TEMPERATURE PROFILE (FOR 1 CYCLE): ABOVE 160°C FOR 120 SECONDS, PEAKING AT 220°C FOR 10 SECONDS.
4. LED DEFECT RATE IS 6000 PPM MAX. AFTER IR REFLOW PROCESS AS NOTE 3.
5. WAVE SOLDER CAPABLE TO 265°C PER TE SPEC 109-202, CONDITION B.
6. OBSOLETE PARTS: OBSOLETE CIS STREAMLINING PER D.RENAUD/D.SINISI.

THIS DRAWING IS A CONTROLLED DOCUMENT.

DIMENSIONS: mm

TOLERANCES UNLESS OTHERWISE SPECIFIED:
0 PLC ± –
1 PLC ± 0.3
2 PLC ± 0.2
3 PLC ± 0.15
4 PLC ± –
ANGLES ± 3°

MATERIAL: SEE NOTE
FINISH: SEE NOTE

DWN	A. WU	04MAR2008
CHK	S. HOU	04MAR2008
APVD	W. KODAMA	04MAR2008
PRODUCT SPEC	108-57535	
APPLICATION SPEC	—	
WEIGHT	4.5 GRAMS	

TE Connectivity

NAME: MODULAR JACK CONNECTOR
RJ45 WITH LED, 8P8C, SHIELDED
TAB DOWN, DIP TYPE, H=11.3mm

SIZE	CAGE CODE	DRAWING NO	RESTRICTED TO
A3	00779	C-1734324	—

CUSTOMER DRAWING | SCALE — | SHEET 1 OF 7 | REV A4

THIS DRAWING IS UNPUBLISHED. RELEASED FOR PUBLICATION -,- .
© COPYRIGHT 2010 BY TYCO ELECTRONICS CORPORATION. ALL RIGHTS RESERVED.

LOC	DIST
DW	—

REVISIONS

P	LTR	DESCRIPTION	DATE	DWN	APVD
		SEE SHEET 1.			

LED SCHEMATIC	
LED 2	LED 1
9+ —▷|— −10	11− —◁|— +12

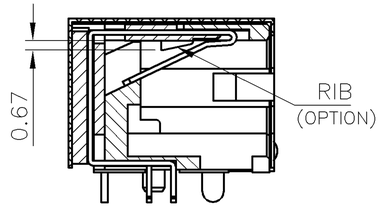

SECTION A–A

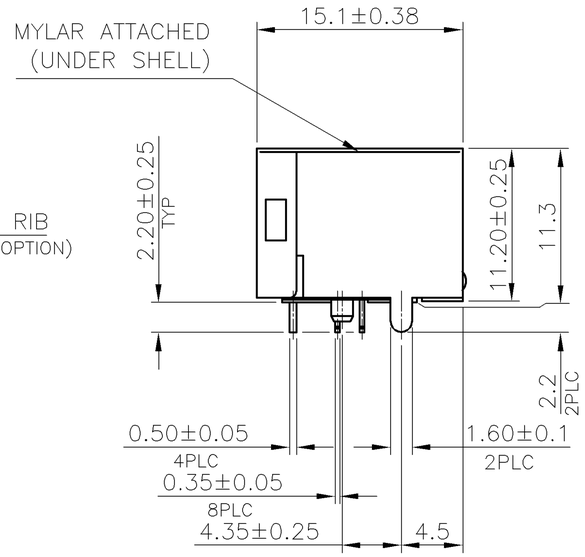

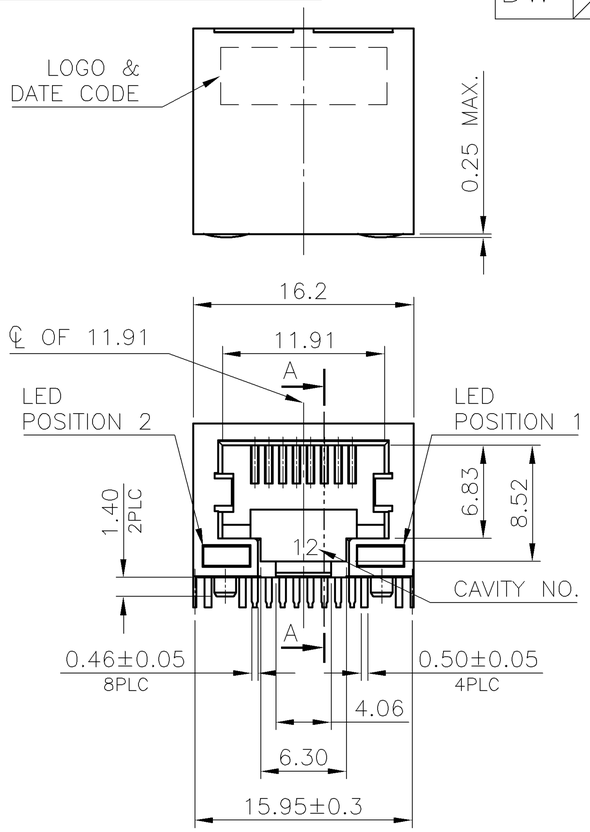

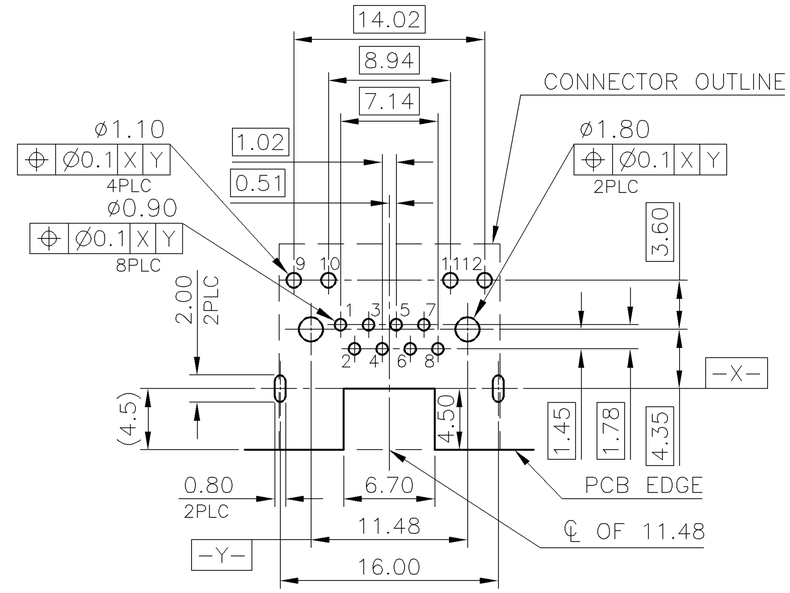

RECOMMENDED PCB LAYOUT (TOP VIEW)
PCB THICKNESS: 1.6mm, TOLERANCE: ±0.05

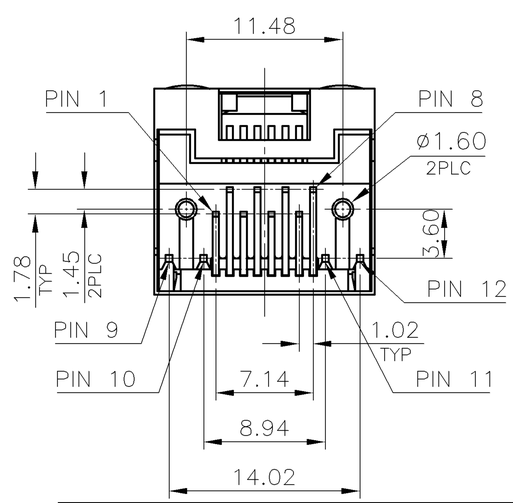

NOTE:

1. MATERIAL:
   - 1.1 HOUSING: PA46, WITH 30% GF, UL94 V–0, BLACK COLOR.
   - 1.2 INSERT HOUSING: PA46, WITH 30% GF, UL94 V–0, BLACK COLOR.
   - 1.3 CONTACTS: PHOSPHOR BRONZE.
   - 1.4 SHELL: BRASS.
   - 1.5 LED SOLDER TAIL: STEEL.
   - 1.6 MYLAR: SILICONE POLYMER.
2. FINISH:
   - 2.1 CONTACTS: (SEE TABLE) GOLD PLATED ON CONTACT AREA.
     GOLD FLASH ON SOLDER TAIL.
     1.27um [50u"] MIN. NICKEL UNDERPLATED OVERALL.
   - 2.2 SHELL: 0.508um [20u"] MIN. NICKEL PLATED.
   - 2.3 LED: 1.02um [40u"] COPPER UNDERPLATED OVERALL.
     1.27um [50u"] NICKEL OVERALL.
     1.27um [50u"] SILVER ON BONDING AREA.
     2.54um [100u"] BRIGHT–TIN ON SOLDER AREA.
3. LED MUST BE REFLOW COMPATIBLE TO FOLLOWING TEMPERATURE PROFILE (FOR 1 CYCLE): ABOVE 160°C FOR 120 SECONDS, PEAKING AT 220°C FOR 10 SECONDS.
4. LED DEFECT RATE IS 6000 PPM MAX. AFTER IR REFLOW PROCESS AS NOTE 3.
5. WAVE SOLDER CAPABLE TO 265°C PER TE SPEC 109–202, CONDITION B.
6. △6 OBSOLETE PARTS: OBSOLETE CIS STREAMLINING PER D.RENAUD/D.SINISI.

RIB	PACKAGE	POSITION 2 INDICATOR COLOR	POSITION 1 INDICATOR COLOR	MIN. GOLD THICKNESS	PART NUMBER
△6 OBSOLETE, W/O	TAPE & REEL	YELLOW	GREEN	1.27um[50u"]	~~3–1734324–8~~
				0.762um[30u"]	~~3–1734324–7~~
				0.381um[15u"]	~~3–1734324–6~~
				0.152um[6u"]	~~3–1734324–5~~
		GREEN	YELLOW	1.27um[50u"]	3–1734324–4
				0.762um[30u"]	~~3–1734324–3~~
				0.381um[15u"]	~~3–1734324–2~~
				0.152um[6u"]	~~3–1734324–1~~
△6 OBSOLETE, W/	TRAY	YELLOW	GREEN	1.27um[50u"]	~~2–1734324–8~~
				0.762um[30u"]	~~2–1734324–7~~
				0.381um[15u"]	~~2–1734324–6~~
				0.152um[6u"]	~~2–1734324–5~~
		GREEN	YELLOW	1.27um[50u"]	~~2–1734324–4~~
				0.762um[30u"]	~~2–1734324–3~~
				0.381um[15u"]	~~2–1734324–2~~
				0.152um[6u"]	~~2–1734324–1~~

THIS DRAWING IS A CONTROLLED DOCUMENT.

DIMENSIONS: mm

TOLERANCES UNLESS OTHERWISE SPECIFIED:

0 PLC	± –
1 PLC	± 0.3
2 PLC	± 0.2
3 PLC	± 0.15
4 PLC	± –
ANGLES	± 3°

MATERIAL –

FINISH –

DWN –
CHK –
APVD –
PRODUCT SPEC –
APPLICATION SPEC –
WEIGHT –

TE Connectivity

NAME

MODULAR JACK CONNECTOR
RJ45 WITH LED, 8P8C, SHIELDED
TAB DOWN, DIP TYPE, H=11.3mm

SIZE	CAGE CODE	DRAWING NO	RESTRICTED TO
A3	00779	C–1734324	—

CUSTOMER DRAWING | SCALE — | SHEET 2 OF 7 | REV A4

THIS DRAWING IS UNPUBLISHED. RELEASED FOR PUBLICATION -,- .
© COPYRIGHT 2010 BY TYCO ELECTRONICS CORPORATION. ALL RIGHTS RESERVED.

LOC	DIST
DW	—

REVISIONS

P	LTR	DESCRIPTION	DATE	DWN	APVD
		SEE SHEET 1.			

LED SCHEMATIC	
LED 2	LED 1
9+ —▷— −10	ORANGE 11 + ▷ − 12 − ◁ + GREEN

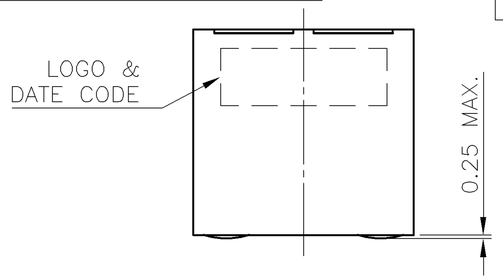

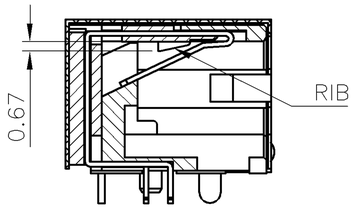

SECTION A–A

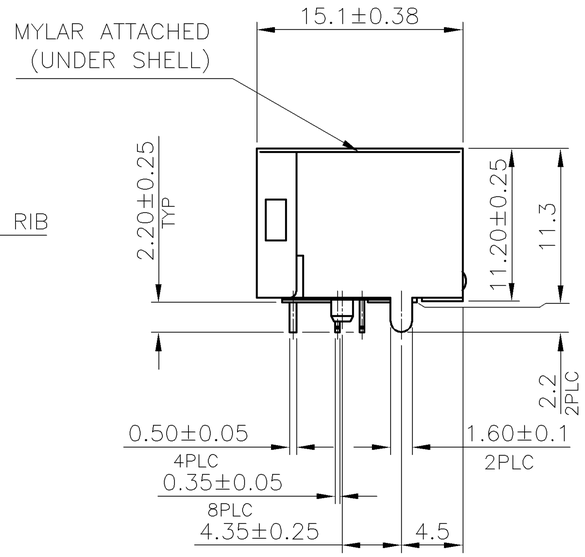

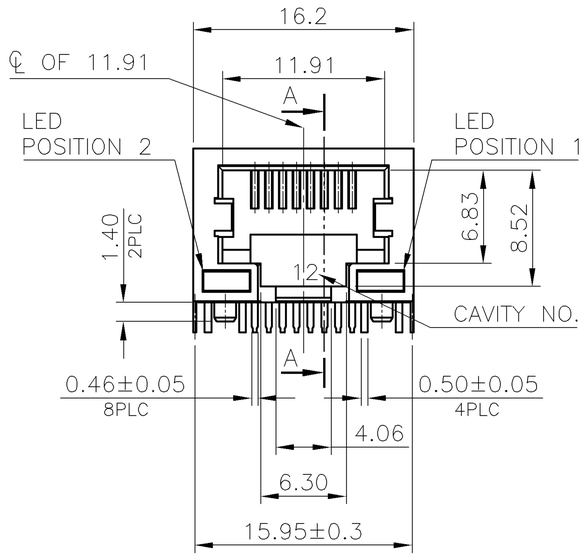

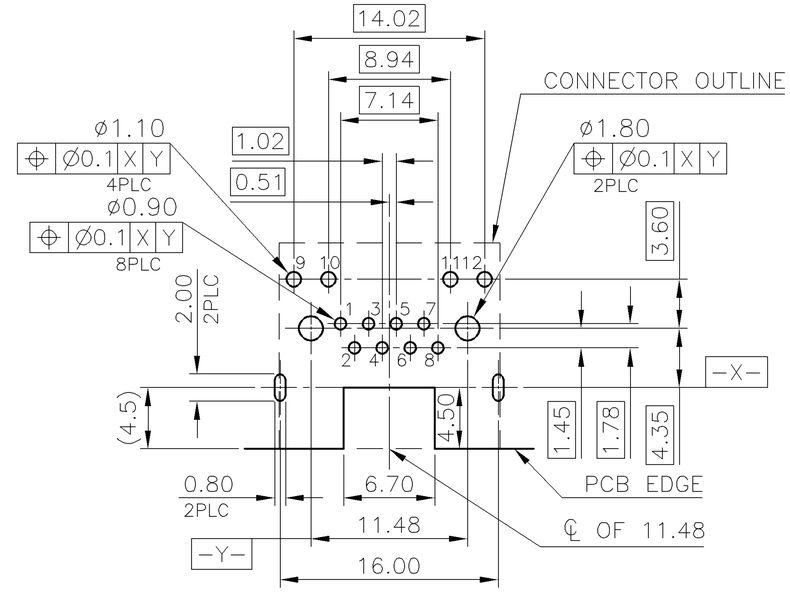

RECOMMENDED PCB LAYOUT (TOP VIEW)
PCB THICKNESS: 1.6mm, TOLERANCE: ±0.05

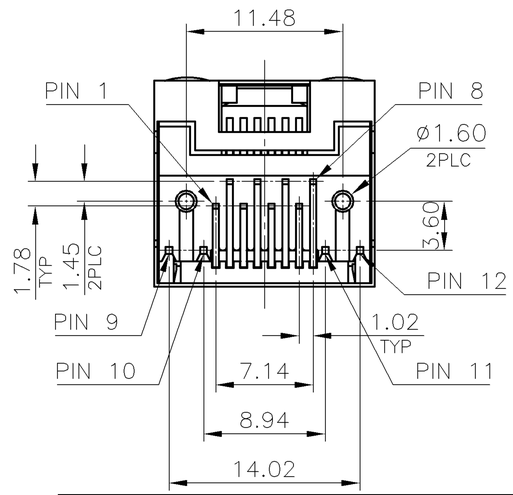

NOTE:

1. MATERIAL:
   - 1.1 HOUSING: PA46, WITH 30% GF, UL94 V–0, BLACK COLOR.
   - 1.2 INSERT HOUSING: PA46, WITH 30% GF, UL94 V–0, BLACK COLOR.
   - 1.3 CONTACTS: PHOSPHOR BRONZE.
   - 1.4 SHELL: BRASS.
   - 1.5 LED SOLDER TAIL: STEEL.
   - 1.6 MYLAR: SILICONE POLYMER.
2. FINISH:
   - 2.1 CONTACTS: (SEE TABLE) GOLD PLATED ON CONTACT AREA.
     GOLD FLASH ON SOLDER TAIL.
     1.27um [50u"] MIN. NICKEL UNDERPLATED OVERALL.
   - 2.2 SHELL: 0.508um [20u"] MIN. NICKEL PLATED.
   - 2.3 LED: 1.02um [40u"] COPPER UNDERPLATED OVERALL.
     1.27um [50u"] NICKEL OVERALL.
     1.27um [50u"] SILVER ON BONDING AREA.
     2.54um [100u"] BRIGHT–TIN ON SOLDER AREA.
3. LED MUST BE REFLOW COMPATIBLE TO FOLLOWING TEMPERATURE PROFILE (FOR 1 CYCLE): ABOVE 160°C FOR 120 SECONDS, PEAKING AT 220°C FOR 10 SECONDS.
4. LED DEFECT RATE IS 6000 PPM MAX. AFTER IR REFLOW PROCESS AS NOTE 3.
5. WAVE SOLDER CAPABLE TO 265°C PER TE SPEC 109–202, CONDITION B.
6. OBSOLETE PARTS: OBSOLETE CIS STREAMLINING PER D.RENAUD/D.SINISI.

6 OBSOLETE	TRAY	GREEN	ORANGE/ GREEN	1.27um[50u"]	~~4–1734324–4~~
				0.762um[30u"]	4–1734324–3
6 OBSOLETE				0.381um[15u"]	~~4–1734324–2~~
				0.152um[6u"]	~~4–1734324–1~~
	PACKAGE	POSITION 2	POSITION 1	MIN. GOLD THICKNESS	PART NUMBER
		INDICATOR COLOR			

THIS DRAWING IS A CONTROLLED DOCUMENT.

DIMENSIONS: mm

TOLERANCES UNLESS OTHERWISE SPECIFIED:

0 PLC	± –
1 PLC	± 0.3
2 PLC	± 0.2
3 PLC	± 0.15
4 PLC	± –
ANGLES	± 3°

MATERIAL –

FINISH –

DWN –
CHK –
APVD –
PRODUCT SPEC –
APPLICATION SPEC –
WEIGHT –

TE Connectivity

NAME
MODULAR JACK CONNECTOR
RJ45 WITH LED, 8P8C, SHIELDED
TAB DOWN, DIP TYPE, H=11.3mm

SIZE	CAGE CODE	DRAWING NO	RESTRICTED TO
A3	00779	C–1734324	—

CUSTOMER DRAWING | SCALE — | SHEET 3 OF 7 | REV A4

1470–19 (1/08)

THIS DRAWING IS UNPUBLISHED. RELEASED FOR PUBLICATION -,- .
© COPYRIGHT 2010 BY TYCO ELECTRONICS CORPORATION. ALL RIGHTS RESERVED.

LOC	DIST
DW	—

REVISIONS

P	LTR	DESCRIPTION	DATE	DWN	APVD
		SEE SHEET 1.			

LED SCHEMATIC	
LED 2	LED 1
9+ ▷| −10	11+ ▷| −12

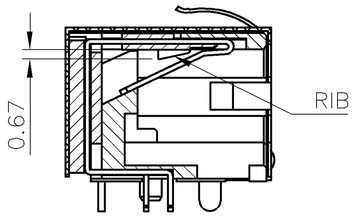

SECTION A–A

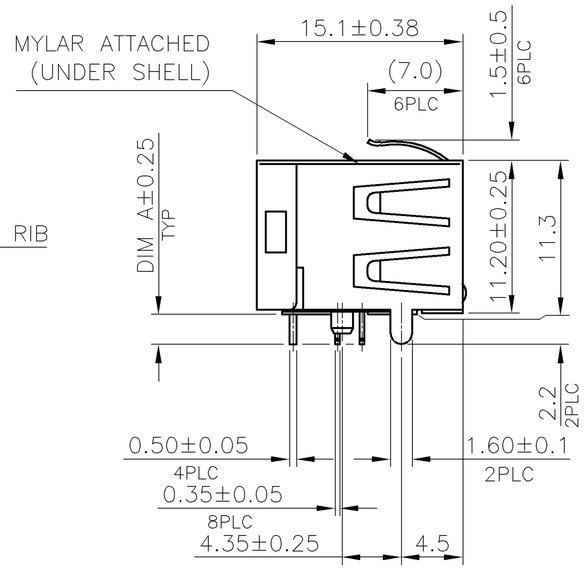

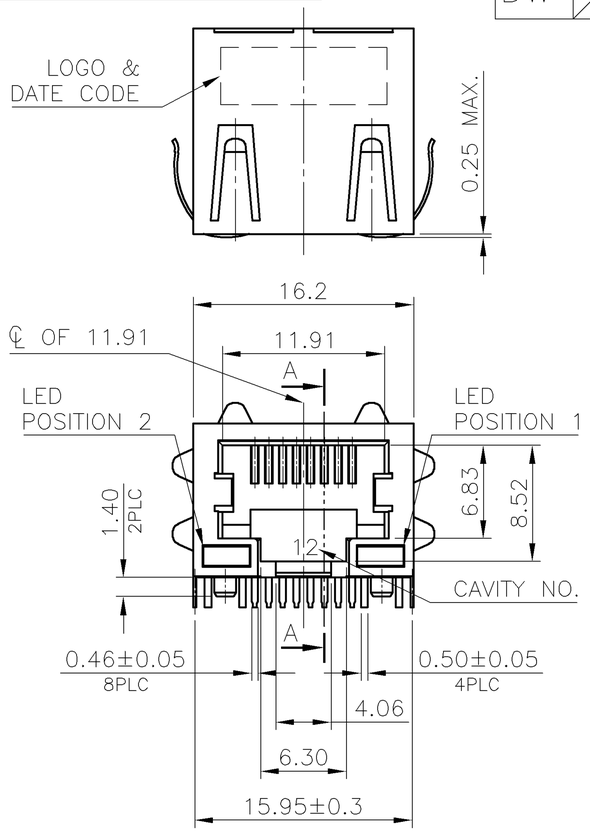

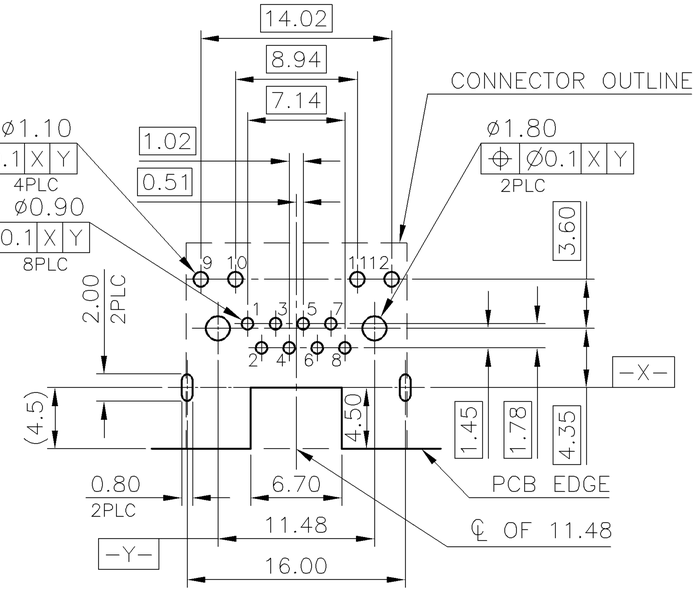

RECOMMENDED PCB LAYOUT (TOP VIEW)
TOLERANCE: ±0.05

RECOMMENDED PCB THICKNESS	DIM A
1.6	2.2
2.0	3.5

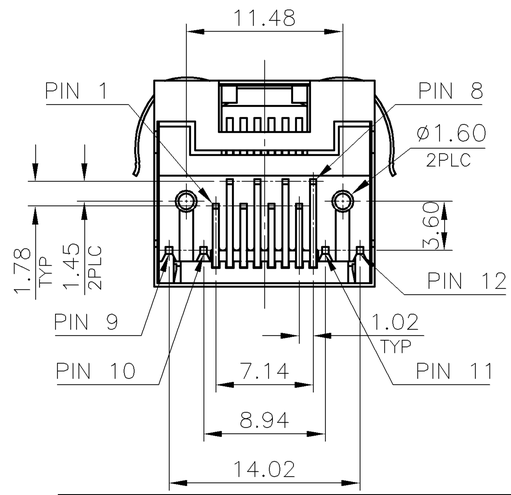

NOTE:

1. MATERIAL:
   - 1.1 HOUSING: PA46, WITH 30% GF, UL94 V–0, BLACK COLOR.
   - 1.2 INSERT HOUSING: PA46, WITH 30% GF, UL94 V–0, BLACK COLOR.
   - 1.3 CONTACTS: PHOSPHOR BRONZE.
   - 1.4 SHELL: BRASS.
   - 1.5 LED SOLDER TAIL: STEEL.
   - 1.6 MYLAR: SILICONE POLYMER.
2. FINISH:
   - 2.1 CONTACTS: (SEE TABLE) GOLD PLATED ON CONTACT AREA.
     GOLD FLASH ON SOLDER TAIL.
     1.27um [50u”] MIN. NICKEL UNDERPLATED OVERALL.
   - 2.2 SHELL: 0.508um [20u”] MIN. NICKEL PLATED.
   - 2.3 LED: 1.02um [40u”] COPPER UNDERPLATED OVERALL.
     1.27um [50u”] NICKEL OVERALL.
     1.27um [50u”] SILVER ON BONDING AREA.
     2.54um [100u”] BRIGHT–TIN ON SOLDER AREA.
3. LED MUST BE REFLOW COMPATIBLE TO FOLLOWING TEMPERATURE PROFILE (FOR 1 CYCLE): ABOVE 160°C FOR 120 SECONDS, PEAKING AT 220°C FOR 10 SECONDS.
4. LED DEFECT RATE IS 6000 PPM MAX. AFTER IR REFLOW PROCESS AS NOTE 3.
5. WAVE SOLDER CAPABLE TO 265°C PER TE SPEC 109–202, CONDITION B.

6. OBSOLETE PARTS: OBSOLETE CIS STREAMLINING PER D.RENAUD/D.SINISI.

PACKAGE	DIM A	POSITION 2	POSITION 1	MIN. GOLD THICKNESS	PART NUMBER
		INDICATOR COLOR			
TRAY	3.5	GREEN	YELLOW	0.762um[30u”]	5–1734324–9
TRAY	2.2	YELLOW	GREEN	1.27um[50u”]	~~5–1734324–8~~
				0.762um[30u”]	~~5–1734324–7~~
				0.381um[15u”]	~~5–1734324–6~~
				0.152um[6u”]	~~5–1734324–5~~
		GREEN	YELLOW	1.27um[50u”]	~~5–1734324–4~~
				0.762um[30u”]	5–1734324–3
				0.381um[15u”]	~~5–1734324–2~~
				0.152um[6u”]	5–1734324–1

6 OBSOLETE

6 OBSOLETE

THIS DRAWING IS A CONTROLLED DOCUMENT.

DIMENSIONS: mm

TOLERANCES UNLESS OTHERWISE SPECIFIED:

0 PLC	± –
1 PLC	± 0.3
2 PLC	± 0.2
3 PLC	± 0.15
4 PLC	± –
ANGLES	± 3°

MATERIAL –

FINISH –

DWN –
CHK –
APVD –
PRODUCT SPEC –
APPLICATION SPEC –
WEIGHT –

TE Connectivity

NAME

MODULAR JACK CONNECTOR
RJ45 WITH LED, 8P8C, SHIELDED
TAB DOWN, DIP TYPE, H=11.3mm

SIZE	CAGE CODE	DRAWING NO	RESTRICTED TO
A3	00779	C–1734324	—

CUSTOMER DRAWING | SCALE — | SHEET 4 OF 7 | REV A4

THIS DRAWING IS UNPUBLISHED. RELEASED FOR PUBLICATION -,- .
© COPYRIGHT 2010 BY TYCO ELECTRONICS CORPORATION. ALL RIGHTS RESERVED.

LOC	DIST
DW	—

REVISIONS

P	LTR	DESCRIPTION	DATE	DWN	APVD
		SEE SHEET 1.			

LED SCHEMATIC	
LED 2	LED 1
GREEN 9 + − 10 − + ORANGE	11 + − 12

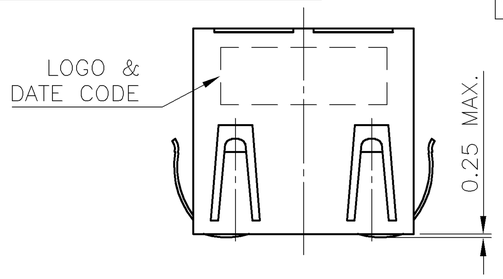

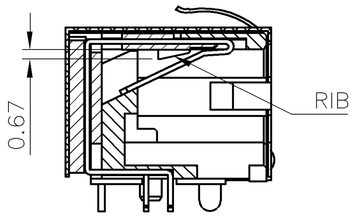

SECTION A–A

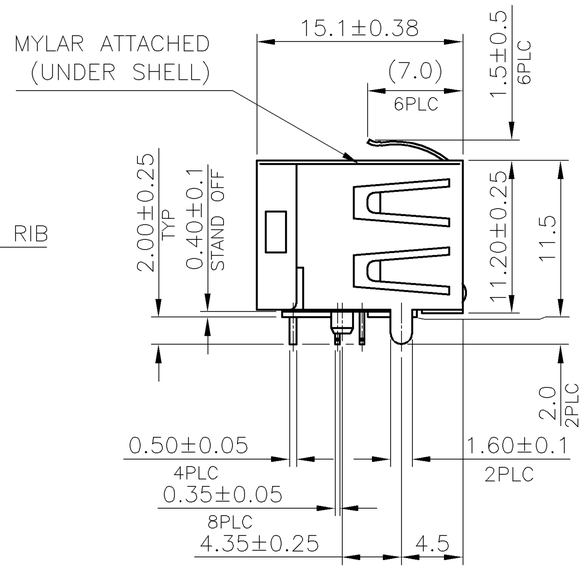

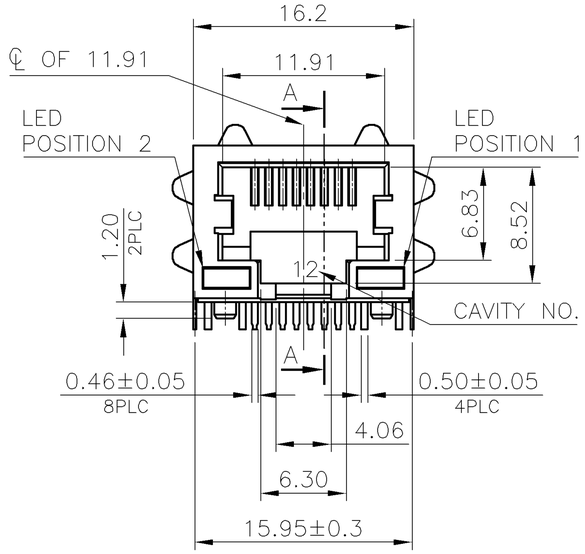

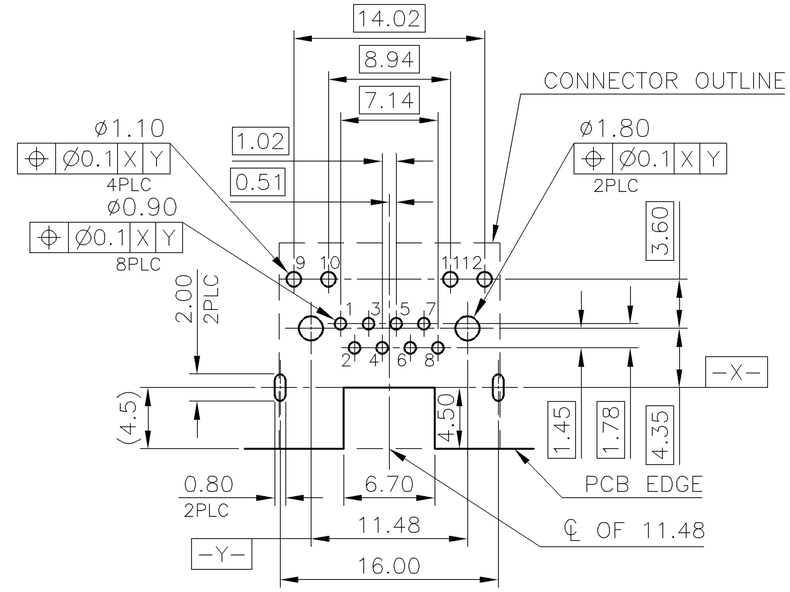

RECOMMENDED PCB LAYOUT (TOP VIEW)
PCB THICKNESS: 1.6mm, TOLERANCE: ±0.05

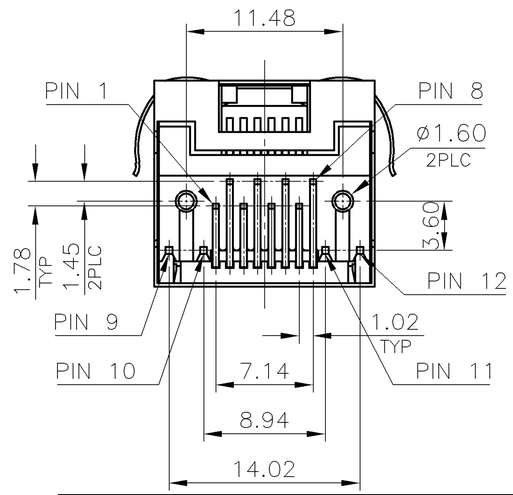

NOTE:

1. MATERIAL:
   - 1.1 HOUSING: PA9T, WITH 30% GF, UL94 V–0, BLACK COLOR.
   - 1.2 INSERT HOUSING: PA46, WITH 30% GF, UL94 V–0, BLACK COLOR.
   - 1.3 CONTACTS: PHOSPHOR BRONZE.
   - 1.4 SHELL: BRASS.
   - 1.5 LED SOLDER TAIL: STEEL.
   - 1.6 MYLAR: SILICONE POLYMER.
2. FINISH:
   - 2.1 CONTACTS: (SEE TABLE) GOLD PLATED ON CONTACT AREA.
     GOLD FLASH ON SOLDER TAIL.
     1.27um [50u"] MIN. NICKEL UNDERPLATED OVERALL.
   - 2.2 SHELL: 0.508um [20u"] MIN. NICKEL PLATED.
   - 2.3 LED: 1.02um [40u"] COPPER UNDERPLATED OVERALL.
     1.27um [50u"] NICKEL OVERALL.
     1.27um [50u"] SILVER ON BONDING AREA.
     2.54um [100u"] BRIGHT–TIN ON SOLDER AREA.
3. LED MUST BE REFLOW COMPATIBLE TO FOLLOWING TEMPERATURE PROFILE (FOR 1 CYCLE): ABOVE 160°C FOR 120 SECONDS, PEAKING AT 220°C FOR 10 SECONDS.
4. LED DEFECT RATE IS 6000 PPM MAX. AFTER IR REFLOW PROCESS AS NOTE 3.
5. WAVE SOLDER CAPABLE TO 265°C PER TE SPEC 109–202, CONDITION B.

PACKAGE	POSITION 2	POSITION 1	MIN. GOLD THICKNESS	PART NUMBER
	INDICATOR COLOR			
TAPE & REEL	GREEN/ ORANGE	YELLOW	1.27um[50u"]	6–1734324–8
			0.762um[30u"]	6–1734324–7
			0.381um[15u"]	6–1734324–6
			0.152um[6u"]	6–1734324–5
TRAY			1.27um[50u"]	6–1734324–4
			0.762um[30u"]	6–1734324–3
			0.381um[15u"]	6–1734324–2
			0.152um[6u"]	6–1734324–1

THIS DRAWING IS A CONTROLLED DOCUMENT.

DIMENSIONS: mm

TOLERANCES UNLESS OTHERWISE SPECIFIED:

0 PLC	± –
1 PLC	± 0.3
2 PLC	± 0.2
3 PLC	± 0.15
4 PLC	± –
ANGLES	± 3°

MATERIAL –

FINISH –

DWN –
CHK –
APVD –
PRODUCT SPEC –
APPLICATION SPEC –
WEIGHT –

TE Connectivity

NAME
MODULAR JACK CONNECTOR
RJ45 WITH LED, 8P8C, SHIELDED
TAB DOWN, DIP TYPE, H=11.3mm

SIZE	CAGE CODE	DRAWING NO	RESTRICTED TO
A3	00779	C–1734324	—

CUSTOMER DRAWING | SCALE — | SHEET 5 OF 7 | REV A4

1470–19 (1/08)

THIS DRAWING IS UNPUBLISHED. RELEASED FOR PUBLICATION – , – .
© COPYRIGHT 2010 BY TYCO ELECTRONICS CORPORATION. ALL RIGHTS RESERVED.

LOC	DIST
DW	—

REVISIONS

P	LTR	DESCRIPTION	DATE	DWN	APVD
		SEE SHEET 1.			

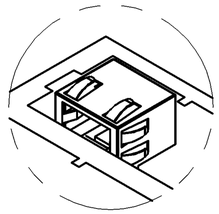

DETAIL C

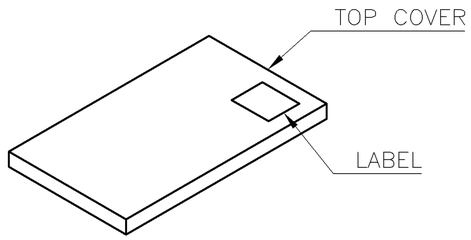

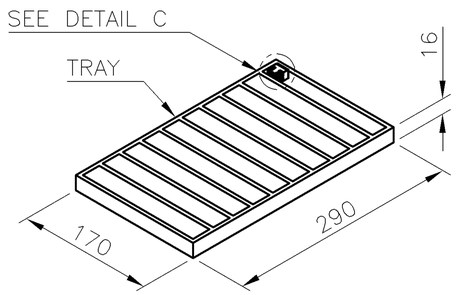

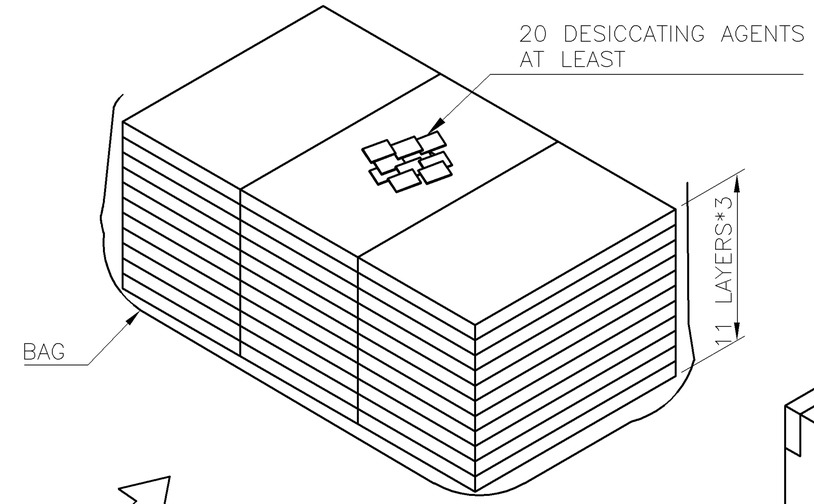

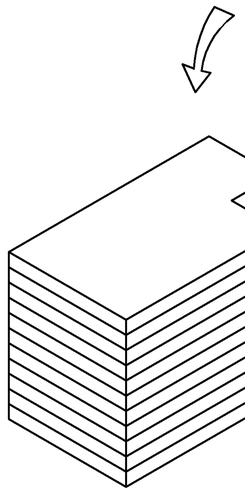

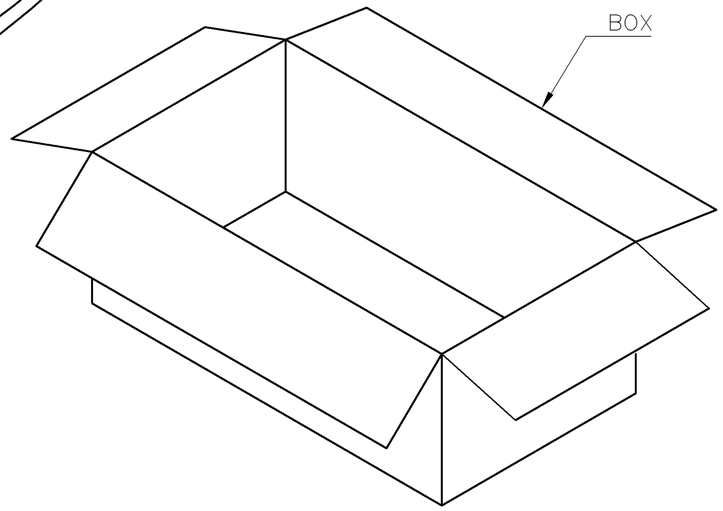

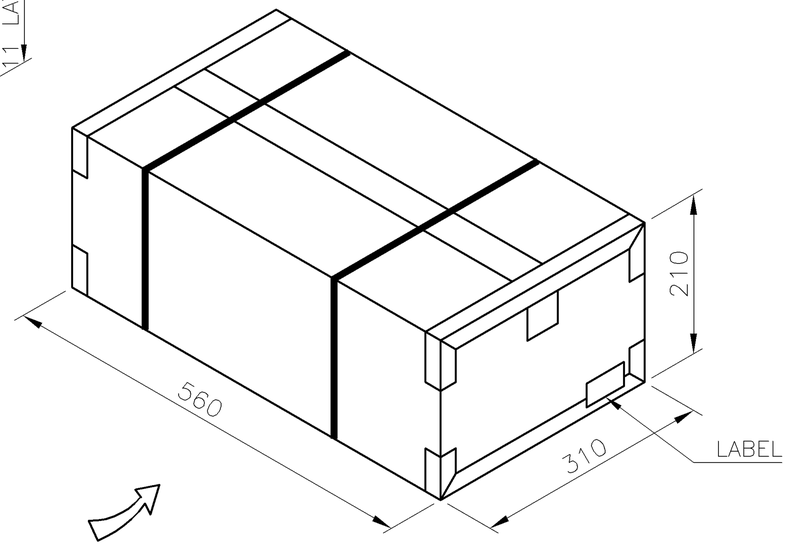

GROSS WEIGHT	NET WEIGHT	PCS /TRAY	TRAY /BOX	PCS /BOX	PART NUMBER
13Kg	11.1Kg	80	33	2640	6–1734324–1~4
					5–1734324–X
14.5Kg	12.5Kg	90			7–1734324–X
					4–1734324–X
					2–1734324–X
					1734324–X

NOTES:
1. MATERIAL:
   TRAY: PVC.
   BOX: CORRUGATED FIBER.
2. DIMENSION: SEE DRAWING
3. QUANTITY: SEE TABLE
4. WEIGHT: SEE TABLE

THIS DRAWING IS A CONTROLLED DOCUMENT.

DIMENSIONS: mm

TOLERANCES UNLESS OTHERWISE SPECIFIED:

0 PLC	± –
1 PLC	± 0.3
2 PLC	± 0.2
3 PLC	± 0.15
4 PLC	± –
ANGLES	± 3°

MATERIAL –

FINISH –

DWN –
CHK –
APVD –
PRODUCT SPEC –
APPLICATION SPEC –
WEIGHT –

TE Connectivity

NAME
MODULAR JACK CONNECTOR
RJ45 WITH LED, 8P8C, SHIELDED
TAB DOWN, DIP TYPE, H=11.3mm

SIZE	CAGE CODE	DRAWING NO	RESTRICTED TO
A3	00779	C–1734324	—

CUSTOMER DRAWING | SCALE — | SHEET 6 OF 7 | REV A4

THIS DRAWING IS UNPUBLISHED. RELEASED FOR PUBLICATION -,- .
© COPYRIGHT 2010 BY TYCO ELECTRONICS CORPORATION. ALL RIGHTS RESERVED.

LOC	DIST
DW	—

REVISIONS

P	LTR	DESCRIPTION	DATE	DWN	APVD
		SEE SHEET 1.			

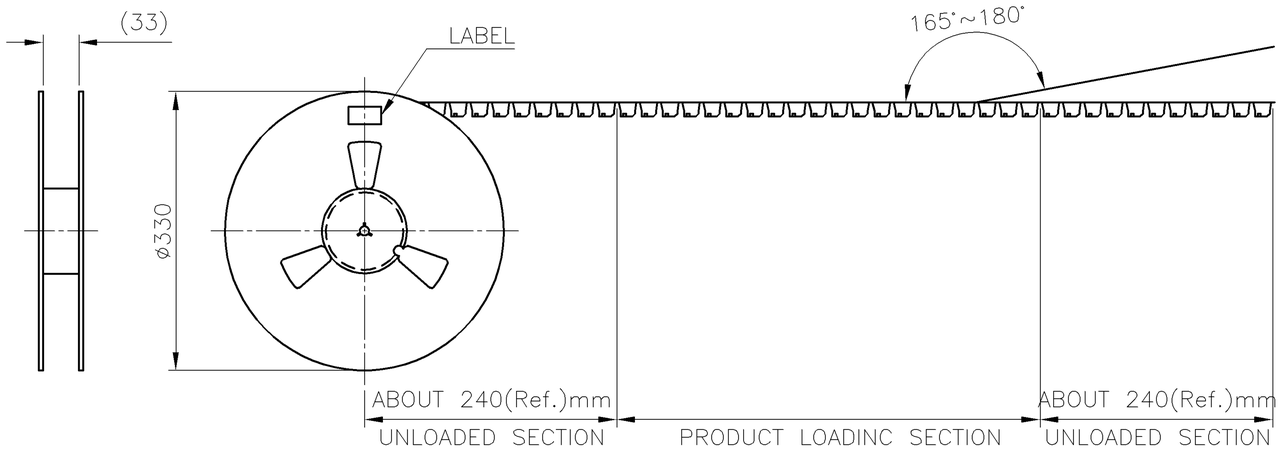

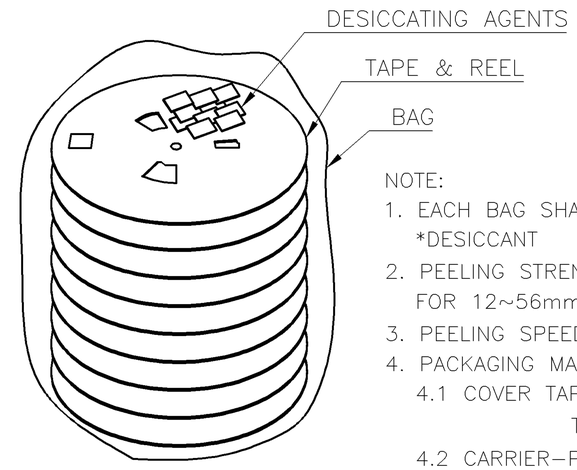

NOTE:
1. EACH BAG SHALL BE INCLUDED:
   *DESICCANT
2. PEELING STRENGTH: 0.1~1.3N(1~130 GRAMS) FOR 12~56mm WIDE CARRIER TAPES
3. PEELING SPEED: 300mm/MINUTES.
4. PACKAGING MATERIAL:
   4.1 COVER TAPE–COMPOSITE OF POLYETHYLENE TEREPHTHALATE (PET)
   4.2 CARRIER–POLYSTYRENE (PS)
   4.3 CARRIER REEL–POLYSTYRENE

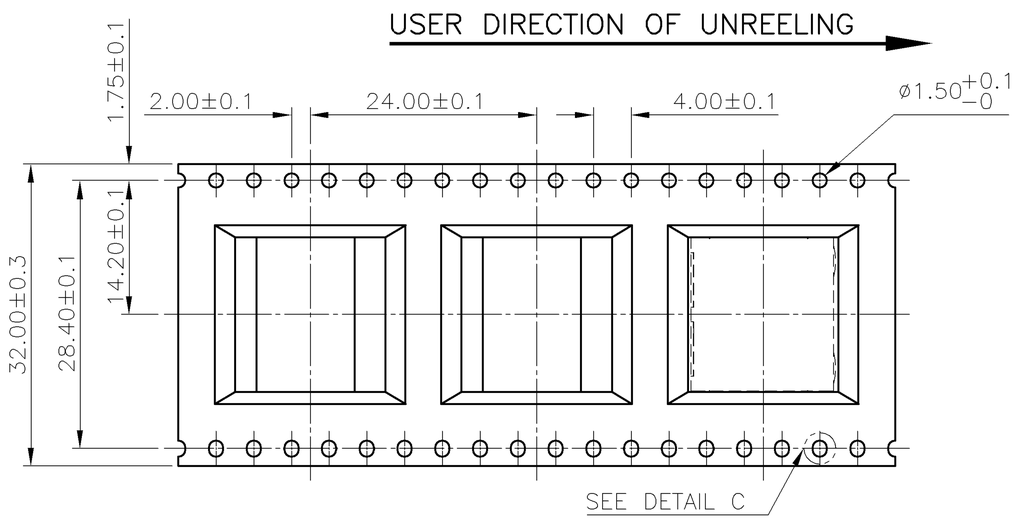

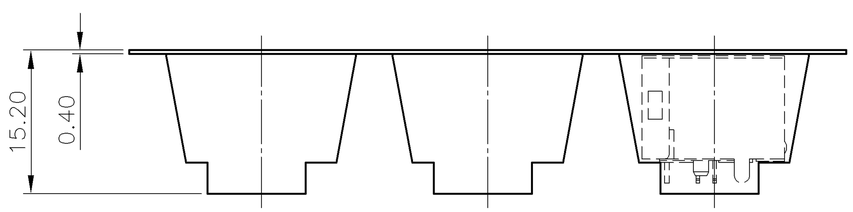

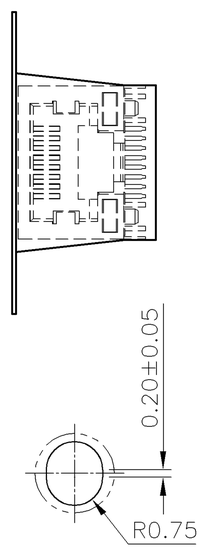

DETAIL C
SCALE 4:1

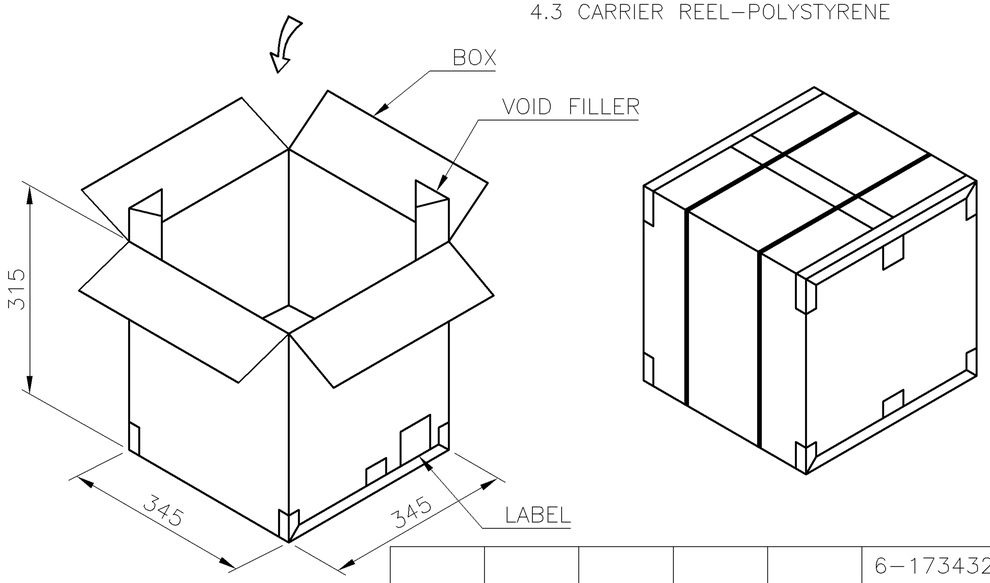

GROSS WEIGHT	NET WEIGHT	PCS /REEL	REEL /BOX	PCS /BOX	PART NUMBER
8.5KG	6.1KG	180	8	1440	6–1734324–5~8
					3–1734324–X
					1–1734324–X

THIS DRAWING IS A CONTROLLED DOCUMENT.

DIMENSIONS: mm

TOLERANCES UNLESS OTHERWISE SPECIFIED:

0 PLC	± –
1 PLC	± 0.3
2 PLC	± 0.2
3 PLC	± 0.15
4 PLC	± –
ANGLES	± 3°

MATERIAL –

FINISH –

DWN –
CHK –
APVD –
PRODUCT SPEC –
APPLICATION SPEC –
WEIGHT –

TE Connectivity

NAME
MODULAR JACK CONNECTOR
RJ45 WITH LED, 8P8C, SHIELDED
TAB DOWN, DIP TYPE, H=11.3mm

SIZE	CAGE CODE	DRAWING NO	RESTRICTED TO
A3	00779	C–1734324	—

CUSTOMER DRAWING | SCALE — | SHEET 7 OF 7 | REV A4

Общество с ограниченной ответственностью «МосЧип» ИНН 7719860671 / КПП 771901001
Адрес: 105318, г.Москва, ул.Щербаковская д.3, офис 1107

Данный компонент на территории Российской Федерации

Вы можете приобрести в компании MosChip.

Для оперативного оформления запроса Вам необходимо перейти по данной ссылке:

http://moschip.ru/get-element

Вы можете разместить у нас заказ для любого Вашего проекта, будь то серийное производство или разработка единичного прибора.

В нашем ассортименте представлены ведущие мировые производители активных и пассивных электронных компонентов.

Нашей специализацией является поставка электронной компонентной базы двойного назначения, продукции таких производителей как XILINX, Intel (ex.ALTERA), Vicor, Microchip, Texas Instruments, Analog Devices, Mini-Circuits, Amphenol, Glenair.

Сотрудничество с глобальными дистрибьюторами электронных компонентов, предоставляет возможность заказывать и получать с международных складов практически любой перечень компонентов в оптимальные для Вас сроки.

На всех этапах разработки и производства наши партнеры могут получить квалифицированную поддержку опытных инженеров.

Система менеджмента качества компании отвечает требованиям в соответствии с ГОСТ Р ИСО 9001, ГОСТ РВ 0015-002 и ЭС РД 009

Офис по работе с юридическими лицами:

105318, г.Москва, ул.Щербаковская д.3, офис 1107, 1118, ДЦ «Щербаковский»

Телефон: +7 495 668-12-70 (многоканальный)

Факс: +7 495 668-12-70 (доб.304)

E-mail: info@moschip.ru

Skype отдела продаж:
moschip.ru
moschip.ru_4
moschip.ru_6
moschip.ru_9