SYMBOL DEFINITION			MISSING SYMBOLS
A DIMENSION WITHOUT AN INSPECTION REPORT SYMBOL ( ) DOES NOT REQUIRE INSPECTION. IT MAY BE CONTROLLED ON THE INDIVIDUAL COMPONENT DRAWING.	TOTAL NO OF INSPECTIONS REQUIRED	16	NO MISSING SYMBOL NUMBER
	LAST NO. USED	12	

DWG STATUS DATE	STG	REV	N/P	CHG	ZONE	REVISION HISTORY	AUTH	DR	APVD 1	APVD 2
10JA13	R	01	-	-		15514473 -WAS PE244648, REV'D & RELEASED; 15514474 -WAS PE244649, REV'D & RELEASED; 15514475 -WAS PE244650, REV'D & RELEASED; 15514476 -WAS PE244651, REV'D & RELEASED; 15514477 -WAS PE244652, REV'D & RELEASED; 15514478 -WAS PE244653, REV'D & RELEASED	421071	HCG	HCG	GGI
05FE13	R	02	-	-		ALL PARTS - REVISED GRAPHICS	421265	HCG	HCG	GGI
02MY13	R	03	-	-		ALL PARTS - RELOCATED DIMS (7 PLCS) AND UPDATED CONN, RETAINER & PLR	421794	JLP	JVM	DAT
01NO13	R	04	-	-		ALL PART - REVISED GRAPHICS	424346	EVV	EVV	GGI
05DE13	R	05	-	-		ALL PARTS - ADDED "ACCEPTED CABLE O.D." NOTE	424870	AGC	JAA	GGI
18FE14	R	06	-	-		ALL PARTS - 1.75 ±0.3 WAS 1.75 AND REVISED RETAINER	425600	EVV	EVV	GGI
16AP14	R	07	-	-		33157811 - 14 - RELEASED	426171	EGH	EGH	EGH
08SE14	R	08	-	-		33157811-14 - MOVED TO SHEET 02; ALL PARTS - UPDATED CPA & CONNECTOR	427366	KYT	KYT	RGC
24JN15	R	09	-	-		ALL PARTS - UPDATED PART AVAILABILITY	430007	DAG	DAG	JSM
24FE16	R	10	-	-		15514474-78 - UPDATED PART AVAILABILITY	432152	NRM	JVM	DGL
12AU16	R	11	-	-		ALL PARTS - UPDATED PLR TO LATEST REVISION, (6.97) WAS 6.97, REVISED LABEL (1 PLC) AND PSD WAS DIM #10	433263	NRM	DGL	DGL

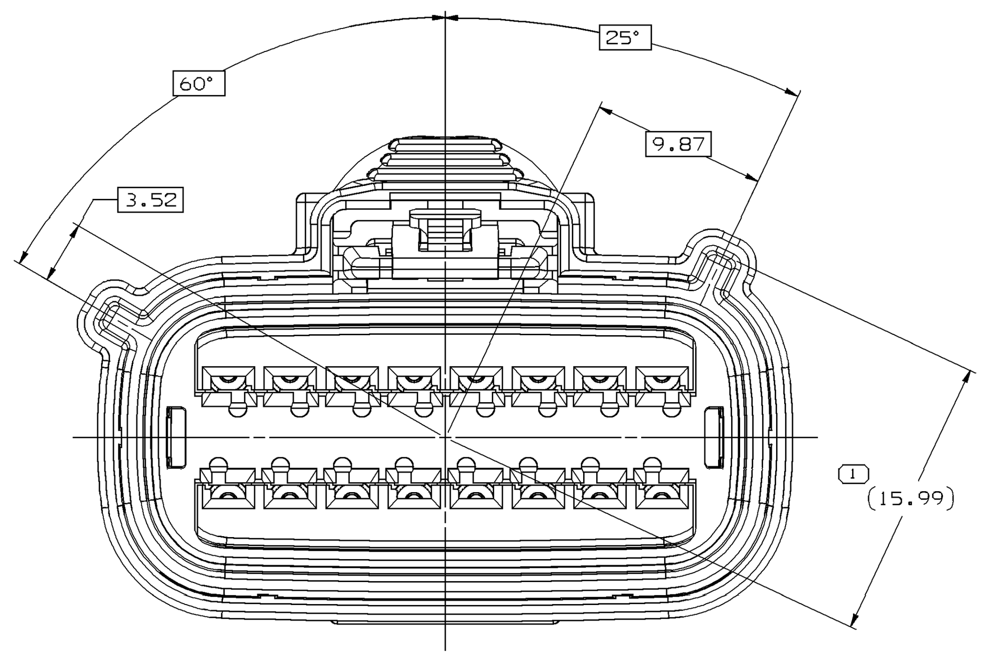

TYPE 102
SAME AS TYPE 101
EXCEPT AS SHOWN

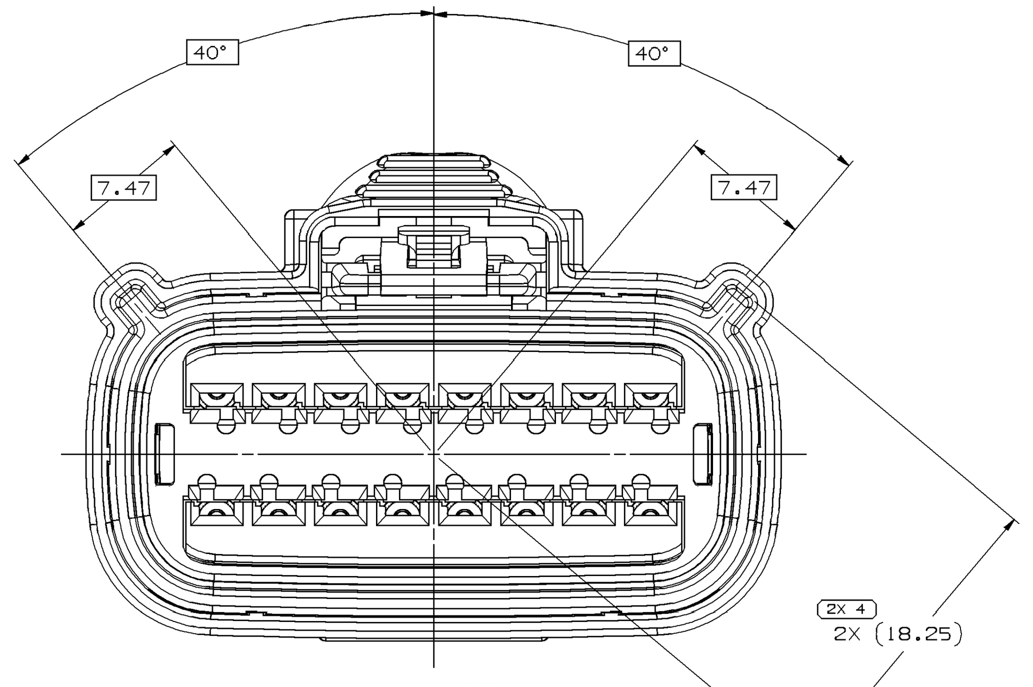

TYPE 105
SAME AS TYPE 101
EXCEPT AS SHOWN

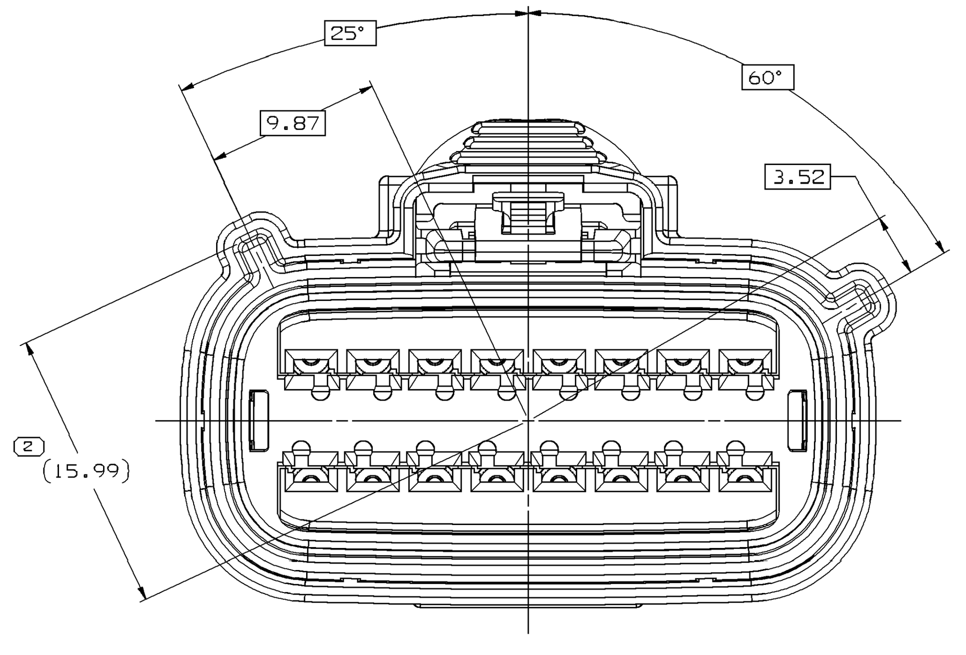

TYPE 103
SAME AS TYPE 101
EXCEPT AS SHOWN

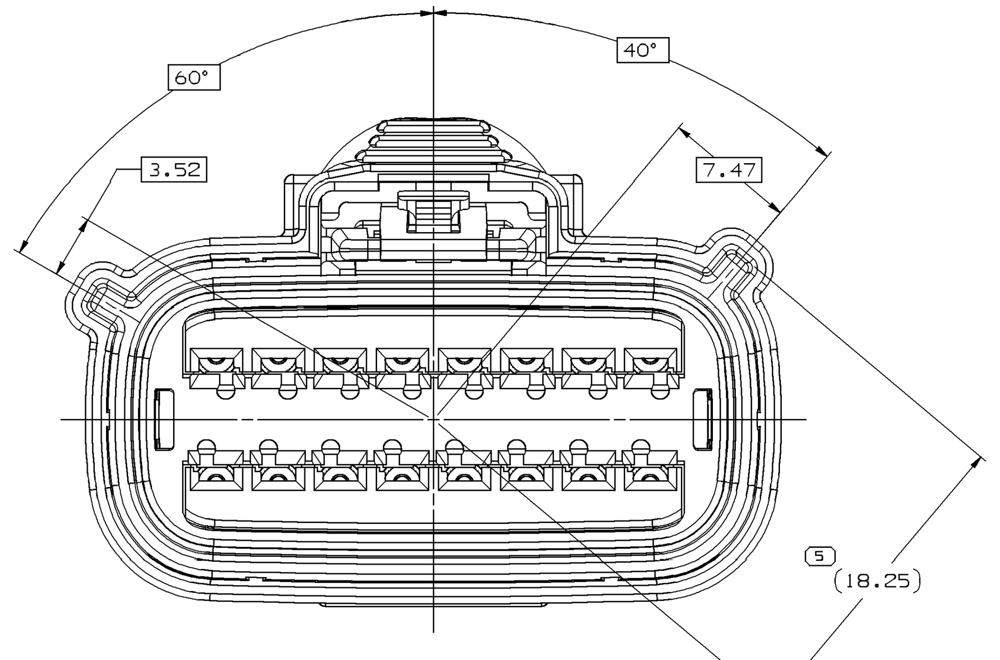

TYPE 106
SAME AS TYPE 101
EXCEPT AS SHOWN

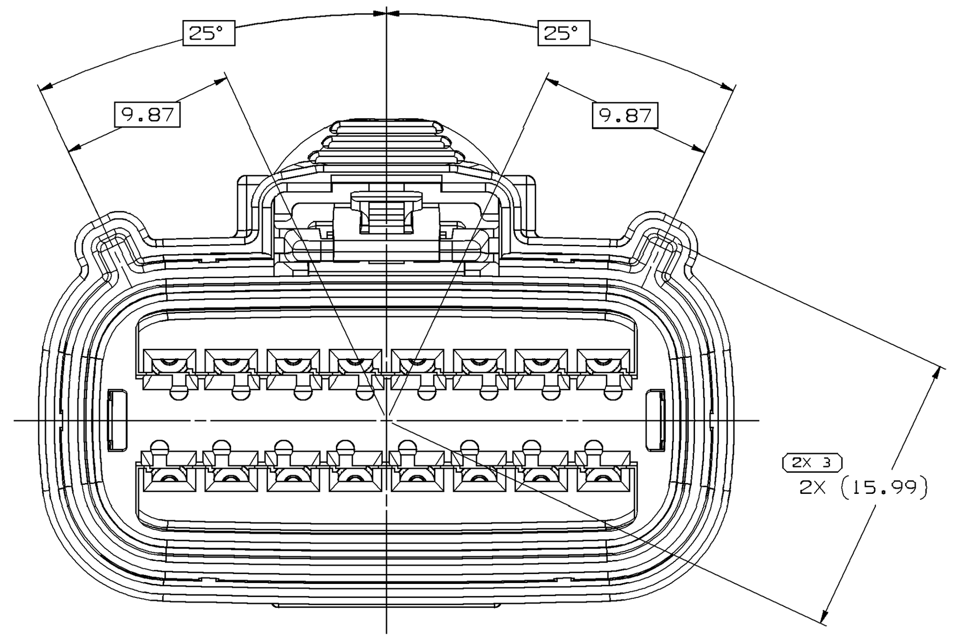

TYPE 104
SAME AS TYPE 101
EXCEPT AS SHOWN

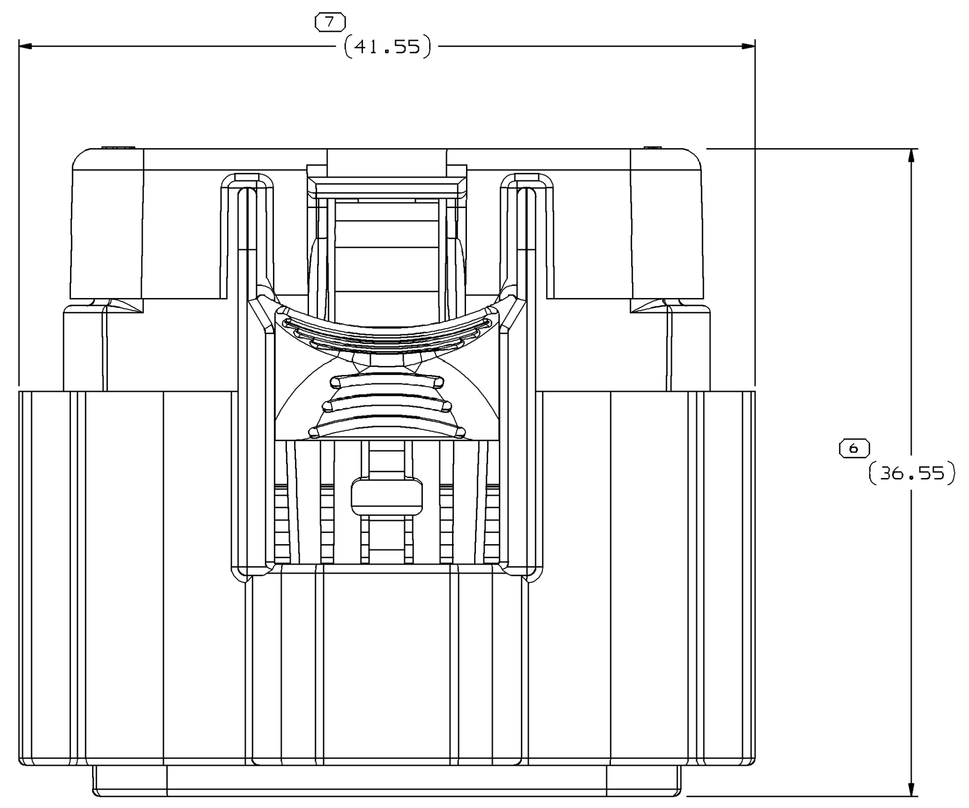

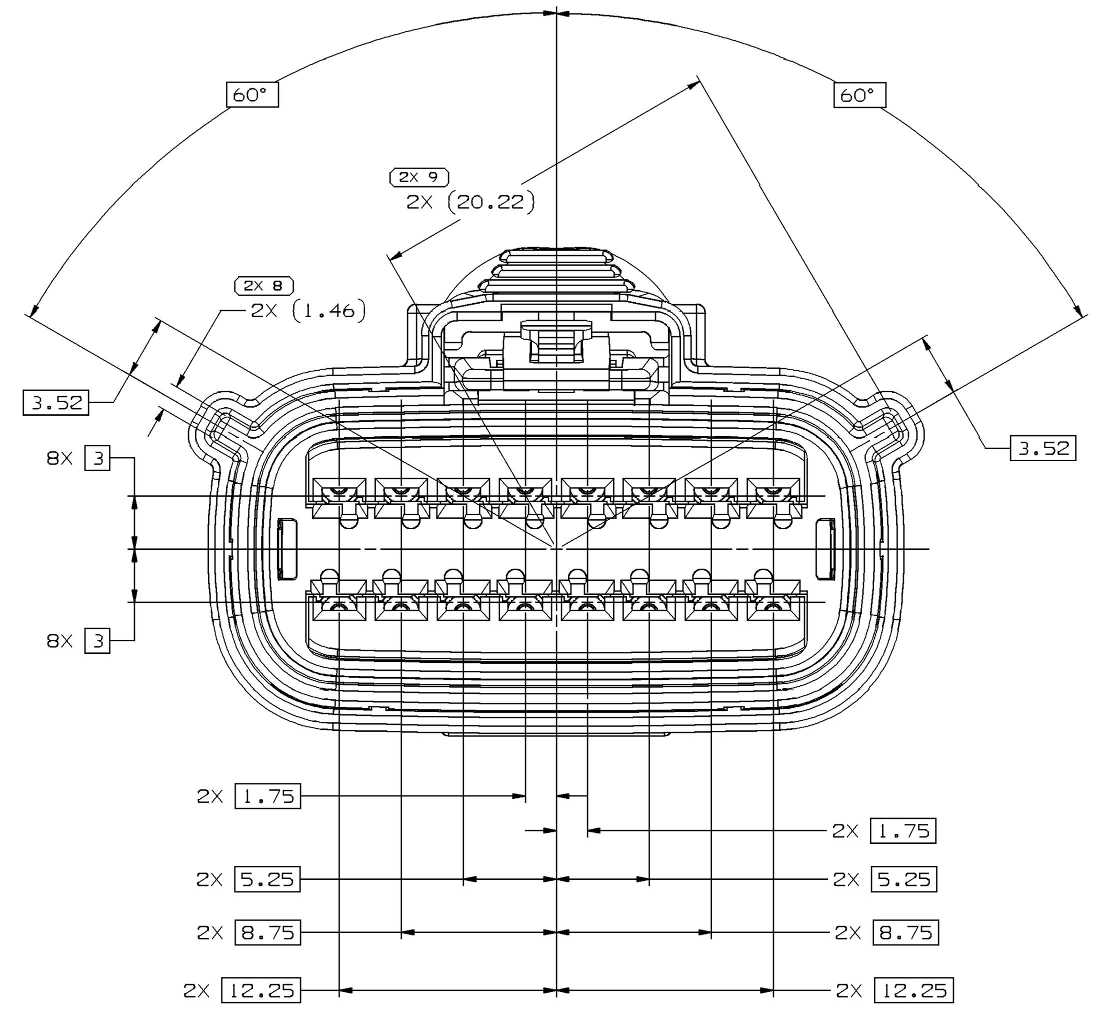

TYPE 101

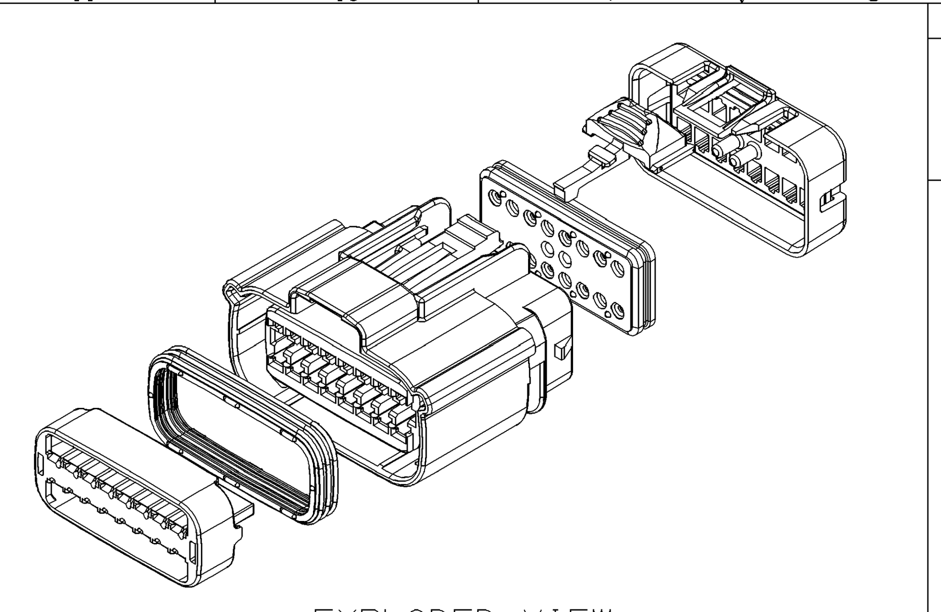

EXPLODED VIEW
SCALE 2:1

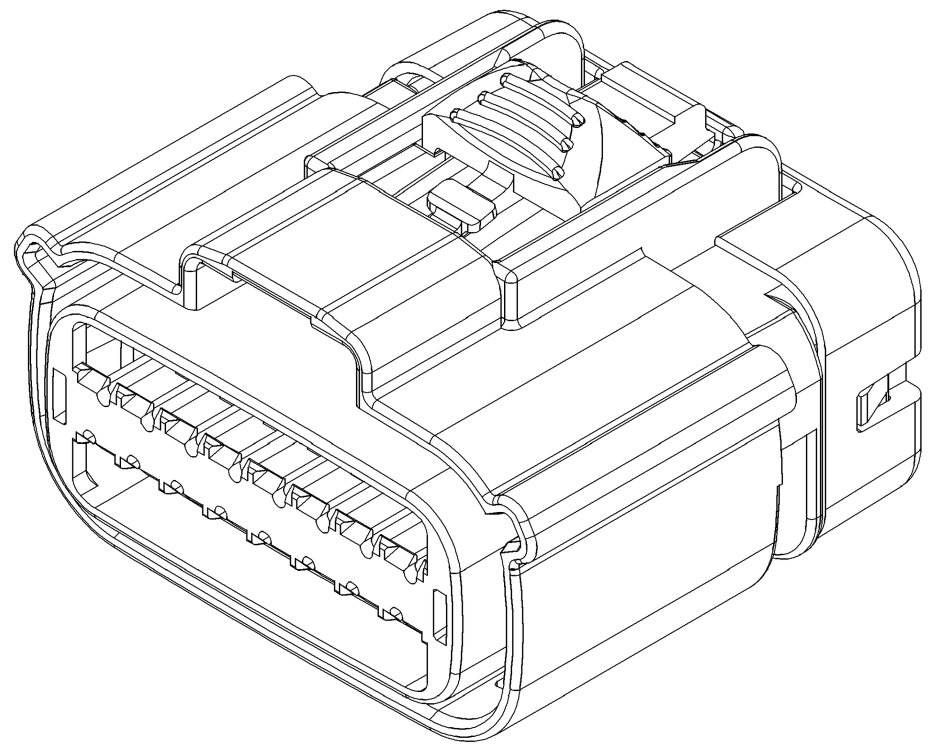

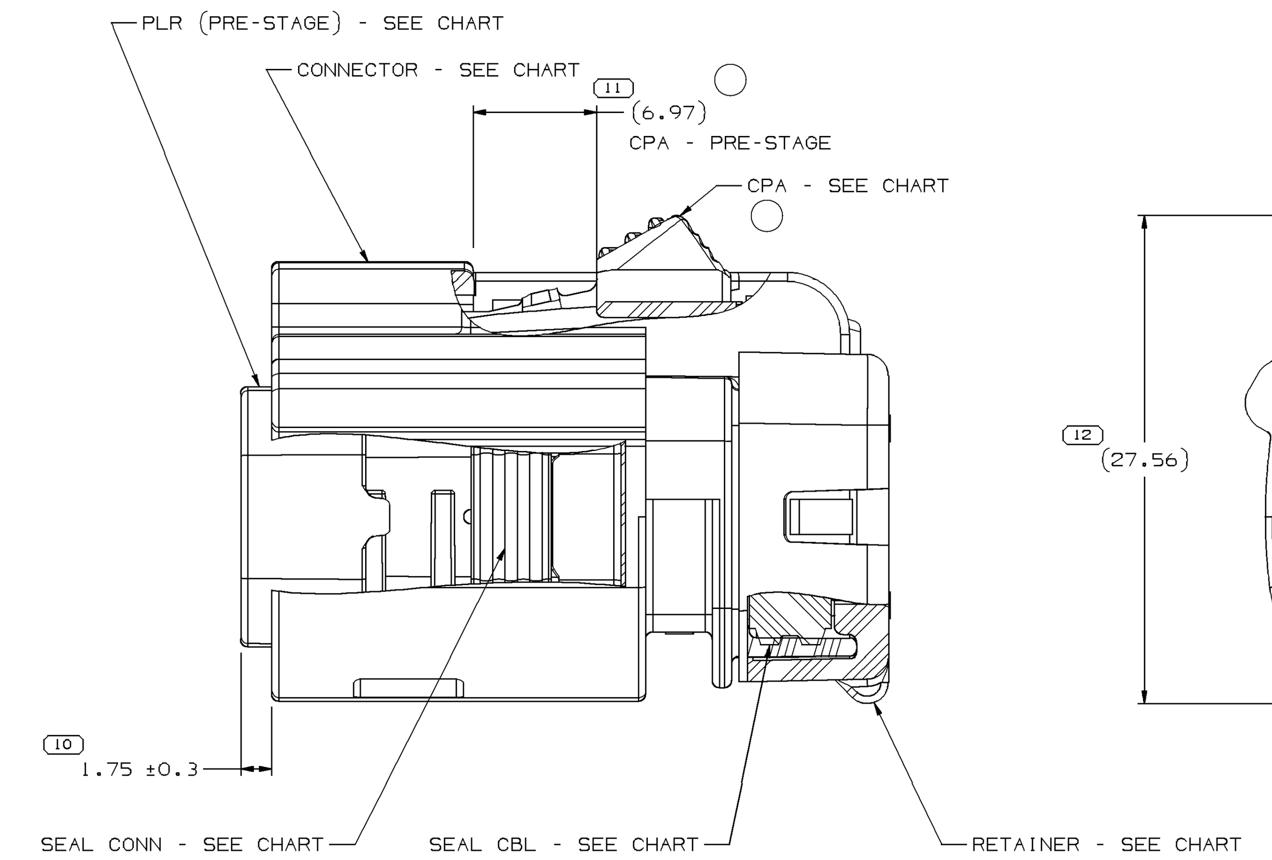

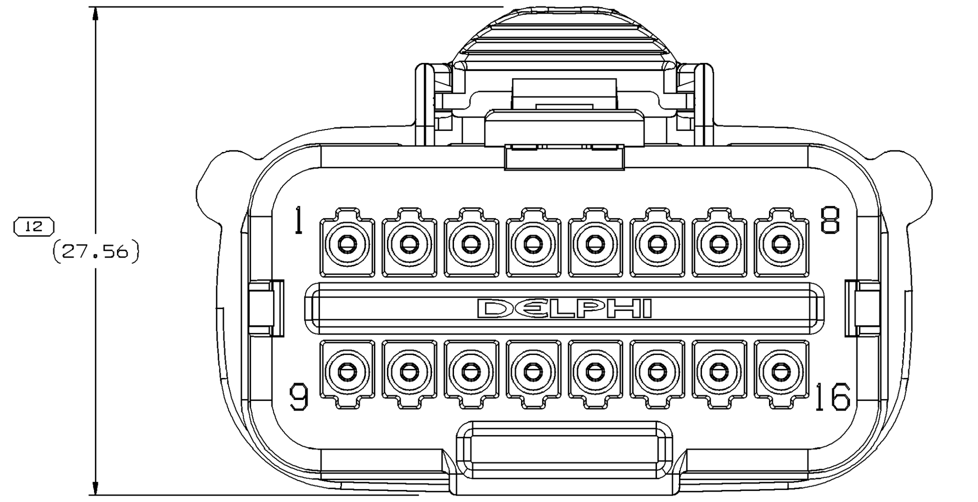

NOTES

1. UNLESS OTHERWISE SPECIFIED AND/OR INDICATED:

   DIMENSIONS ARE TO FACE OF VIEW SHOWN AND AUTOMATICALLY ROUNDED BY COMPUTER FOR INSPECTION (SEE MATH MODEL FOR PRECISE DIMENSIONS). FOR ALL OTHER DIMENSIONS NOT SHOWN BUT REQUIRED FOR TOOL BUILD, SEE MATH MODEL FOR PRECISE TOOL PATH DATA.

2. PART IS MANUFACTURED TO GEOMETRIC TOLERANCES. CENTERLINE DIMENSIONS ARE FOR REFERENCE ONLY.
3. SEALING CODE 4 - DESIGN WILL MEET REQUIREMENTS OF SAE/USCAR-2 CONNECTOR SYSTEM ENVIRONMENTAL TEST FLOWCHART (PRESSURE/VACUUM AND SUBMERSION).
4. THIS PRODUCT IS NOT CATEGORIZED AS AN APPEARANCE ITEM, MINOR IMPERFECTIONS INCLUDING, BUT NOT LIMITED TO, FLOW MARKS, COLOR BLEMISHES, GATE VESTIGE, AND SOFT FLASH THAT DO NOT AFFECT THE FIT, FORM, OR FUNCTION OF THE PART ARE PERMISSIBLE PER DPNP-4.7-CS-01.
5. FOR APPLICATION DATA SEE THE INDIVIDUAL APPLICATION DRAWINGS.
6. ASSEMBLY TO ACCEPT CABLE O.D. BETWEEN 1.2 MM AND 2.1 MM.

PART NO	REV	N/P	TYPE	CONNECTOR	PLR	SEAL CONN	SEAL CBL	RETAINER	CPA	USCAR	BLOCKED CAVITIES
15514478	06	AC	106	15514469	15514487	13968706	15514486	15514483	15519096	F	NONE
15514477	06	AC	105	15514468	15514487	13968706	15514486	15514483	15519096	E	NONE
15514476	06	AC	104	15514466	15514487	13968706	15514486	15514483	15519096	D	NONE
15514475	06	AC	103	15514465	15514487	13968706	15514486	15514483	15519096	C	NONE
15514474	06	AC	102	15514463	15514487	13968706	15514486	15514483	15519096	B	NONE
15514473	06	AB	101	15514462	15514487	13968706	15514486	15514483	15519096	A	NONE

DRAWING NUMBER						
15514480						
SIZE	SCALE	FRAME NO	SHEET NO	STG	REV	N/P
A1x3	5:1	2 OF 2	1 OF 2	R	11	-

(11) PROCESS SENSITIVE DIMENSION

DIMENSIONS ENCLOSED IN ( ) INDICATE REFERENCE DIMENSIONS AND NO TOLERANCE LIMITS ARE ESTABLISHED

DIMENSIONAL RANGE (MM)									CHART E1
FROM TO	> 0 20	> 20 30	> 30 70	> 70 100	>100 150	>150 200	>200 250	>250 300	>300 400
TOLERANCE UNLESS OTHERWISE SPECIFIED									
	±0.15	±0.2	±0.3	±0.4	±0.5	±0.6	±0.8	±1	±1.2
ANGULAR TOLERANCE ±2°									

A LINE DRAWN THROUGH A PART NUMBER INDICATES THAT PHYSICAL PARTS ARE NOT AVAILABLE FOR ORDERING.

PART NUMBERS THAT DO NOT HAVE A LINE PRESENT INDICATE THAT PHYSICAL PARTS ARE AVAILABLE FOR ORDERING.

CONTACT DELPHI SALES TO ASSURE AVAILABILITY OF PARTS.

DWG TYPE: PART DRAWING

STYLE

VOLUME (CM³) | DISTR CODE: D

UNLESS OTHERWISE SPECIFIED

THIS DOCUMENT IS IN ACCORDANCE WITH ASME Y14.5M-1994 AS AMENDED BY THE GM GLOBAL DIMENSIONING AND TOLERANCING ADDENDUM-2001. SEPARATE PATTERNS OF FEATURES MAY BE GAGED SEPARATELY REGARDLESS OF DATUM REFERENCES.

ALL DIMENSIONS ARE IN MILLIMETERS

REFERENCE

THIRD ANGLE PROJECTION

DO NOT SCALE

USE MATH DATA

CAD NX

DELPHI

DELPHI PACKARD ELECTRICAL/ELECTRONIC ARCHITECTURE

WARREN, OH

COPYRIGHT 2013 DELPHI CORPORATION AND/OR ITS AFFILIATES. ALL RIGHTS RESERVED. REVISED 2016
THIS DRAWING IS THE PROPERTY OF DELPHI CORPORATION AND CONTAINS DELPHI CONFIDENTIAL INFORMATION. THE REPRODUCTION, DISTRIBUTION AND UTILIZATION OF THIS DOCUMENT OR ITS RELATED CAD MATH DATA, AS WELL AS COMMUNICATION OF ANY CONTENT TO OTHERS, WITHOUT EXPRESS AUTHORIZATION, IS PROHIBITED.

		DATE
DR		
APVD1	HECTOR CLAUDIO	10JA13
APVD2	HECTOR CLAUDIO	11JA13
APVD3	GERARDO GOMEZ I.	18JA13
APVD4		
APVD5		

SUBSTANCES OF CONCERN AND RECYCLED CONTENT PER DELPHI 10949001

MATERIAL
SEE CHART

DRAWING NAME
TAXI ASM CONN 16 F OCS 1.5 SLD

DRAWING NUMBER						
15514480						
SIZE	SCALE	FRAME NO	SHEET NO	STG	REV	N/P
A1x3	5:1	1 OF 2	1 OF 2	R	11	-

15514480

Общество с ограниченной ответственностью «МосЧип» ИНН 7719860671 / КПП 771901001
Адрес: 105318, г.Москва, ул.Щербаковская д.3, офис 1107

Данный компонент на территории Российской Федерации

Вы можете приобрести в компании MosChip.

Для оперативного оформления запроса Вам необходимо перейти по данной ссылке:

http://moschip.ru/get-element

Вы можете разместить у нас заказ для любого Вашего проекта, будь то серийное производство или разработка единичного прибора.

В нашем ассортименте представлены ведущие мировые производители активных и пассивных электронных компонентов.

Нашей специализацией является поставка электронной компонентной базы двойного назначения, продукции таких производителей как XILINX, Intel (ex.ALTERA), Vicor, Microchip, Texas Instruments, Analog Devices, Mini-Circuits, Amphenol, Glenair.

Сотрудничество с глобальными дистрибьюторами электронных компонентов, предоставляет возможность заказывать и получать с международных складов практически любой перечень компонентов в оптимальные для Вас сроки.

На всех этапах разработки и производства наши партнеры могут получить квалифицированную поддержку опытных инженеров.

Система менеджмента качества компании отвечает требованиям в соответствии с ГОСТ Р ИСО 9001, ГОСТ РВ 0015-002 и ЭС РД 009

Офис по работе с юридическими лицами:

105318, г.Москва, ул.Щербаковская д.3, офис 1107, 1118, ДЦ «Щербаковский»

Телефон: +7 495 668-12-70 (многоканальный)

Факс: +7 495 668-12-70 (доб.304)

E-mail: info@moschip.ru

Skype отдела продаж:
moschip.ru
moschip.ru_4
moschip.ru_6
moschip.ru_9