THIS DRAWING IS UNPUBLISHED. RELEASED FOR PUBLICATION - -, .
© COPYRIGHT - By - ALL RIGHTS RESERVED.

LOC	DIST
AD	00

REVISIONS

P	LTR	DESCRIPTION	DATE	DWN	APVD
	A1	REVISED PER ECO-11-005027	11MAR11	RK	HMR

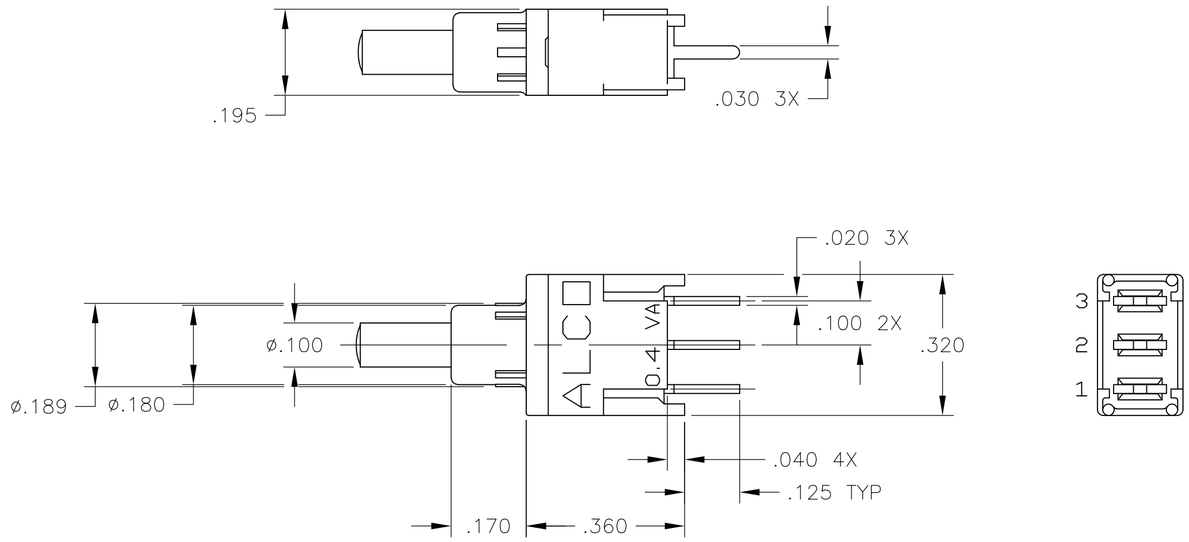

PC PC MOUNT

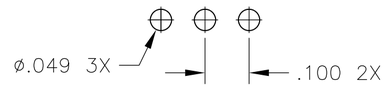

RECOMMENDED HOLE LAYOUT

TOLERANCES FOR ALL PCB LAYOUT DIMENSIONS TO BE ±.002

SPECIFICATIONS:

MATERIALS:
CASE & BUSHING: LCP
BUTTON: POLYAMIDE
SPRING: MUSIC WIRE, ZN PLATED
MOVABLE CONTACT: BRASS OR COPPER ALLOY, AU OVER NI PLATED.
BRACKET: STEEL, TIN OVER COPPER PLATED
TERMINALS: BRASS, TIN OVER NICKEL IN SOLDER AREA AND GOLD OVER NI IN CONTACT AREA.
O-RING: NITRILE

ELECTRICAL:
CONTACT RATING: 0.4VA @ 20 VAC/DC
INITIAL CONTACT RESISTANCE: 20 MILLIOHMS MAX.
INSULATION RESISTANCE: 1000 MEGOHMS @ 500V DC MIN.
DIELECTRIC STRENGTH: C 1000 VOLTS RMS AT SEA LEVEL.
F 500 VOLTS RMS AT SEA LEVEL.
LIFE EXPECTANCY: C 80,000 CYCLES
F 60,000 CYCLES.

MECHANICAL:
ACTUATION TRAVEL: .035

ENVIRONMENTAL:
OPERATING TEMPERATURE: -22°F TO +185°F (-30°C TO +85°C)
STORAGE TEMPERATURE: -67°F TO +185°F (-55°C TO +85°C)

NOTES:

1. ALL MATERIALS AND FINISHES COMPLY WITH EU DIRECTIVE 2002/95/EC OF 27JAN2003 (ROHS)
2. F FUNCTION NOT AVAILABLE WITH SRA TERMINATION.

FIGURE I

FUNCTION CHART

THE FOLLOWING FUNCTIONS AVAILABLE IN SINGLE POLE.

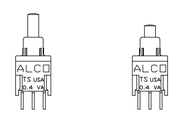

C 2 POSITIONS	OFF	(ON)
TERMINALS CONNECTED:		1-3
OMIT CENTER TERMINAL FOR FUNCTION C		
F 2 POSITIONS	ON	(ON)
TERMINALS CONNECTED:	1-2	2-3

OFF INDICATES A MECHANICAL POSITION WITH NO ELECTRICAL CONNECTION.

(ON) INDICATES MOMENTARY ACTION

PART NUMBERING SEQUENCE

MODEL	BUSHING (PLAIN)	ACTUATOR	No. OF POLES	CONTACT RATING	FUNCTION	CONTACT PLATING	TERMINATIONS	ACTUATOR COLOR	TAPE & REEL PKGNG.	ROHS COMPLIANT
TSP	D		1	1		G			TR	04

ACTUATOR:
- STD .200" LONG
- F FLUSH

FUNCTION:
- C OFF (ON)
- F ON (ON)

TERMINATIONS:
- PC P.C.
- PCV P.C. WITH BRACKET
- RA RIGHT ANGLE
- VRA VERTICAL RIGHT ANGLE
- WW WIRE WRAP
- SRA SURFACE MOUNT R.A.

ACTUATOR COLOR:
- 0 BLACK
- 2 RED

1571990

THIS DRAWING IS A CONTROLLED DOCUMENT.

DIMENSIONS: INCHES

TOLERANCES UNLESS OTHERWISE SPECIFIED:
0 PLC ± -
1 PLC ± -
2 PLC ± -
3 PLC ± .010
4 PLC ± -
ANGLES ± 1°

MATERIAL -
FINISH -

DWN	M.BINNER	01MAR05
CHK	M.ZITTO	01MAR05
APVD	M.ZITTO	01MAR05
PRODUCT SPEC	—	
APPLICATION SPEC	—	
WEIGHT	—	

TE Connectivity

NAME: SEALED PUSHBUTTON SWITCH SINGLE POLE, TSP SERIES, ROHS COMPLIANT

SIZE	CAGE CODE	DRAWING NO	RESTRICTED TO
A2	00779	C-1571990	—

CUSTOMER DRAWING | SCALE 4:1 | SHEET 1 OF 4 | REV A1

THIS DRAWING IS UNPUBLISHED. RELEASED FOR PUBLICATION – –, .
© COPYRIGHT – By – ALL RIGHTS RESERVED.

LOC	DIST
AD	00

REVISIONS

P	LTR	DESCRIPTION	DATE	DWN	APVD
	–	SEE SHEET 1	–	–	–

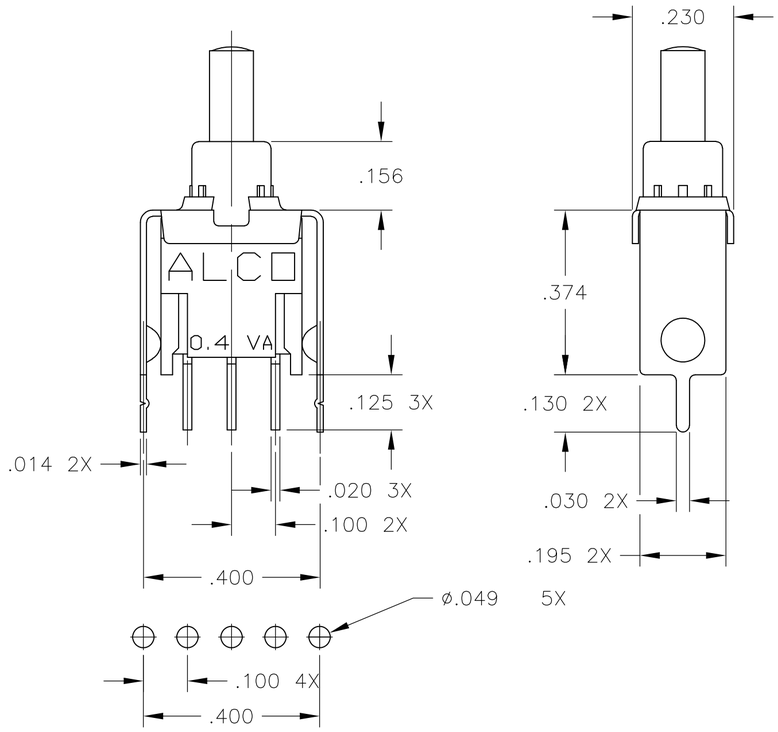

RECOMMENDED HOLE LAYOUT
TOLERANCES ±.002 UNLESS
OTHERWISE NOTED.

PCV PC WITH VERTICAL SUPPORT BRACKET

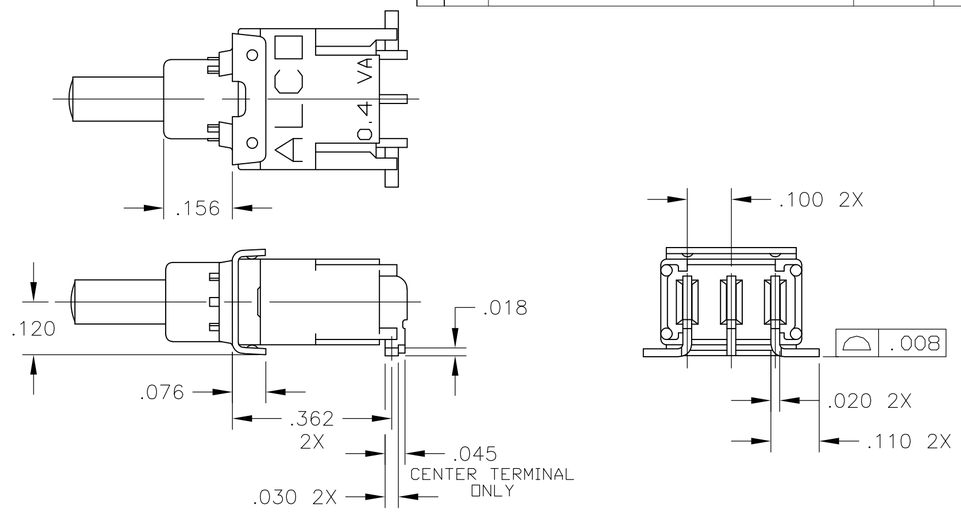

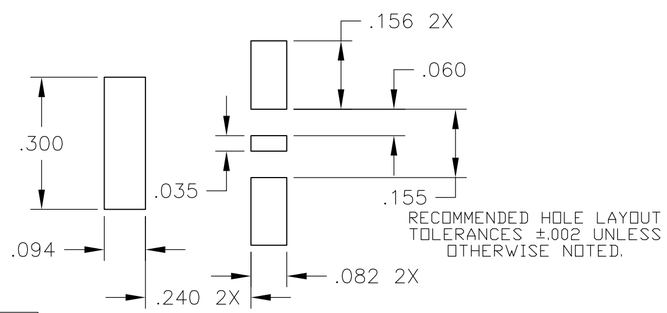

RECOMMENDED HOLE LAYOUT
TOLERANCES ±.002 UNLESS
OTHERWISE NOTED.

SRA SURFACE MOUNT RIGHT ANGLE, "L" BEND

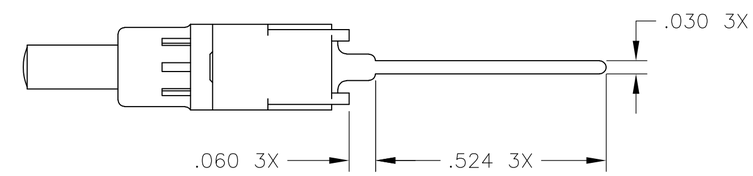

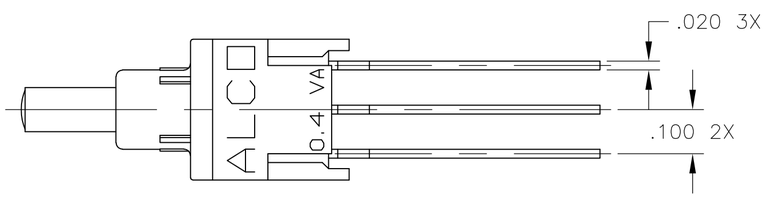

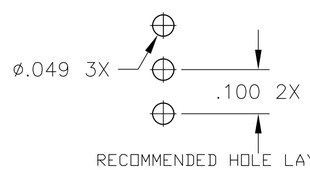

RECOMMENDED HOLE LAYOUT
TOLERANCES ±.002 UNLESS
OTHERWISE NOTED.

WW WIRE WRAP

1571990

THIS DRAWING IS A CONTROLLED DOCUMENT.	DWN M.BINNER 01MAR05	TE Connectivity	
DIMENSIONS: INCHES	CHK M.ZITTO 01MAR05	NAME SEALED PUSHBUTTON SWITCH SINGLE POLE, TSP SERIES, ROHS COMPLIANT –	
TOLERANCES UNLESS OTHERWISE SPECIFIED: 0 PLC ± – ; 1 PLC ± – ; 2 PLC ± – ; 3 PLC ± .010 ; 4 PLC ± – ; ANGLES ± 1°	APVD M.ZITTO 01MAR05	SIZE A2	CAGE CODE 00779
	PRODUCT SPEC –	DRAWING NO C-1571990	RESTRICTED TO –
	APPLICATION SPEC –		
MATERIAL –	FINISH –	WEIGHT –	
		CUSTOMER DRAWING	SCALE 4:1 SHEET 2 OF 4 REV A1

THIS DRAWING IS UNPUBLISHED. RELEASED FOR PUBLICATION – –, .
© COPYRIGHT – By – ALL RIGHTS RESERVED.

LOC	DIST
AD	00

REVISIONS

P	LTR	DESCRIPTION	DATE	DWN	APVD
	–	SEE SHEET 1	–	–	–

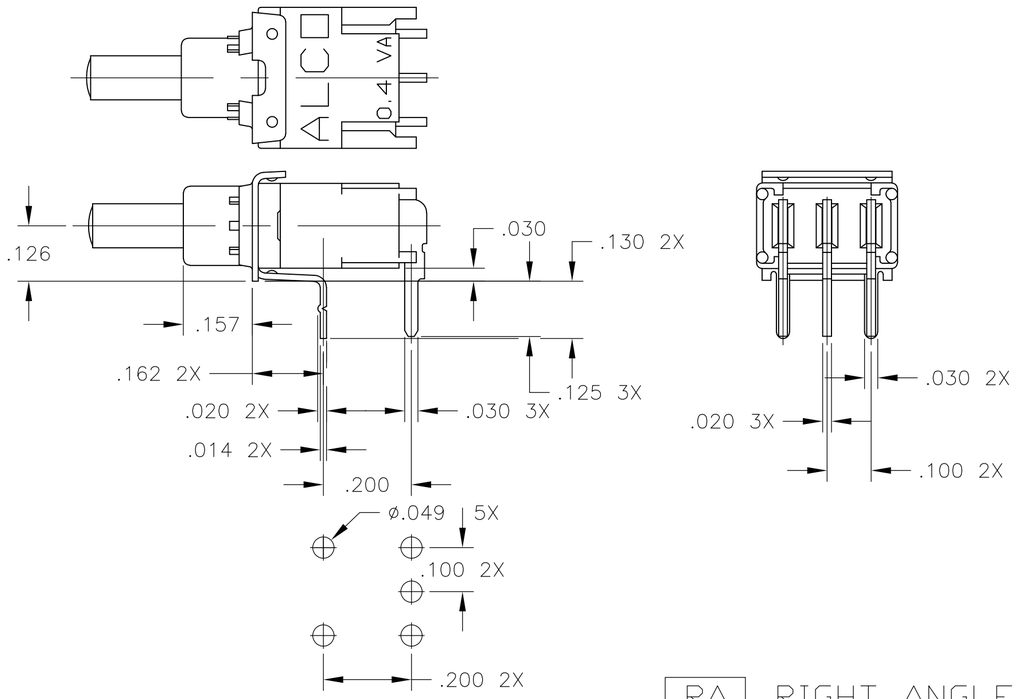

RECOMMENDED HOLE LAYOUT TOLERANCES
±.002 UNLESS OTHERWISE NOTED

RA RIGHT ANGLE

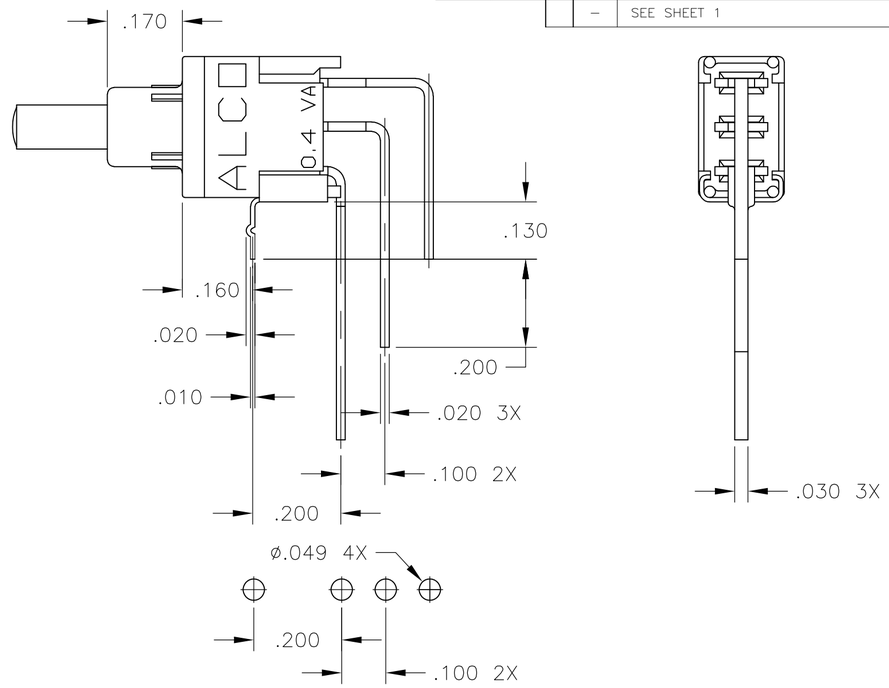

RECOMMENDED HOLE LAYOUT TOLERANCES
±.002 UNLESS OTHERWISE NOTED.

VRA VERTICAL RIGHT ANGLE

1571990

THIS DRAWING IS A CONTROLLED DOCUMENT.

DIMENSIONS: INCHES

TOLERANCES UNLESS OTHERWISE SPECIFIED:
0 PLC ± –
1 PLC ± –
2 PLC ± –
3 PLC ± .010
4 PLC ± –
ANGLES ± 1°

MATERIAL –

FINISH –

DWN	M.BINNER	01MAR05
CHK	M.ZITTO	01MAR05
APVD	M.ZITTO	01MAR05
PRODUCT SPEC	—	
APPLICATION SPEC	—	
WEIGHT	—	

TE Connectivity

NAME
SEALED PUSHBUTTON SWITCH
SINGLE POLE, TSP SERIES, ROHS COMPLIANT
–

SIZE	CAGE CODE	DRAWING NO	RESTRICTED TO
A2	00779	C-1571990	—

CUSTOMER DRAWING | SCALE 4:1 | SHEET 3 OF 4 | REV A1

THIS DRAWING IS UNPUBLISHED. RELEASED FOR PUBLICATION – –, .
© COPYRIGHT – By – ALL RIGHTS RESERVED.

LOC	DIST
AD	00

REVISIONS

P	LTR	DESCRIPTION	DATE	DWN	APVD
	–	SEE SHEET 1	–	—	—

obsolete	TSPDF11FGVRA004	3-1571990-1
obsolete	TSPDF11FGSRA004	3-1571990-0
	TSPDF11FGRA004	2-1571990-9
	TSPDF11FGPC004	2-1571990-8
	TSPDF11CGVRA004	2-1571990-7
preliminary	TSPDF11CGSRA004	2-1571990-6
	TSPDF11CGRA004	2-1571990-5
obsolete	TSPDF11CGSRAB0TR04	2-1571990-4
preliminary	TSPDF11CGSRA0TR04	2-1571990-3
	TSPDF11CGPC004	2-1571990-2
	TSPD11FGVRA004	2-1571990-1
obsolete	TSPD11FGSRAB004	2-1571990-0
obsolete	TSPD11FGSRA004	1-1571990-9
obsolete	TSPD11FGSPC004	1-1571990-8
	TSPD11FGRA004	1-1571990-7
	TSPD11FGPCV004	1-1571990-6
	TSPD11FGPC004	1-1571990-5
	TSPD11CGWW004	1-1571990-4
	TSPD11CGVRA004	1-1571990-3
obsolete	TSPD11CGSRAB004	1-1571990-2
preliminary	TSPD11CGSRA204	1-1571990-1
preliminary	TSPD11CGSRA0TR04	1-1571990-0
preliminary	TSPD11CGSRA004	1571990-9
obsolete	TSPD11CGSPC204	1571990-8
obsolete	TSPD11CGSPC004	1571990-7
	available	1571990-6
	TSPD11CGRA204	1571990-5
	TSPD11CGRA004	1571990-4
	TSPD11CGPCV004	1571990-3
	TSPD11CGPC204	1571990-2
	TSPD11CGPC004	1571990-1
	Alco P/N	P/N

1571990

THIS DRAWING IS A CONTROLLED DOCUMENT.

DIMENSIONS: INCHES

TOLERANCES UNLESS OTHERWISE SPECIFIED:
0 PLC ± –
1 PLC ± –
2 PLC ± –
3 PLC ± .010
4 PLC ± –
ANGLES ± 1°

MATERIAL –

FINISH –

DWN M.BINNER 01MAR05
CHK M.ZITTO 01MAR05
APVD M.ZITTO 01MAR05
PRODUCT SPEC —
APPLICATION SPEC —
WEIGHT —

TE Connectivity

NAME
SEALED PUSHBUTTON SWITCH
SINGLE POLE, TSP SERIES, ROHS COMPLIANT
–

SIZE	CAGE CODE	DRAWING NO	RESTRICTED TO
A2	00779	C-1571990	—

CUSTOMER DRAWING

SCALE	SHEET	REV
1:1	4 OF 4	A1

Общество с ограниченной ответственностью «МосЧип» ИНН 7719860671 / КПП 771901001
Адрес: 105318, г.Москва, ул.Щербаковская д.3, офис 1107

Данный компонент на территории Российской Федерации

Вы можете приобрести в компании MosChip.

Для оперативного оформления запроса Вам необходимо перейти по данной ссылке:

http://moschip.ru/get-element

Вы можете разместить у нас заказ для любого Вашего проекта, будь то серийное производство или разработка единичного прибора.

В нашем ассортименте представлены ведущие мировые производители активных и пассивных электронных компонентов.

Нашей специализацией является поставка электронной компонентной базы двойного назначения, продукции таких производителей как XILINX, Intel (ex.ALTERA), Vicor, Microchip, Texas Instruments, Analog Devices, Mini-Circuits, Amphenol, Glenair.

Сотрудничество с глобальными дистрибьюторами электронных компонентов, предоставляет возможность заказывать и получать с международных складов практически любой перечень компонентов в оптимальные для Вас сроки.

На всех этапах разработки и производства наши партнеры могут получить квалифицированную поддержку опытных инженеров.

Система менеджмента качества компании отвечает требованиям в соответствии с ГОСТ Р ИСО 9001, ГОСТ РВ 0015-002 и ЭС РД 009

Офис по работе с юридическими лицами:

105318, г.Москва, ул.Щербаковская д.3, офис 1107, 1118, ДЦ «Щербаковский»

Телефон: +7 495 668-12-70 (многоканальный)

Факс: +7 495 668-12-70 (доб.304)

E-mail: info@moschip.ru

Skype отдела продаж:
moschip.ru
moschip.ru_4
moschip.ru_6
moschip.ru_9