DATA SHEET

74LV4060

14-stage binary ripple counter with oscillator

Product specification

1998 Jun 23

Philips
Semiconductors

PHILIPS

14-stage binary ripple counter with oscillator 74LV4060

FEATURES

- Wide operating voltage: 1.0 to 5.5 V
- Optimized for Low Voltage applications: 1.0 to 3.6 V
- Accepts TTL input levels between V_{CC} = 2.7 V and V_{CC} = 3.6 V
- Typical V_{OLP} (output ground bounce) < 0.8 V at V_{CC} = 3.3 V, T_{amb} = 25˚C.
- Typical V_{OHV} (output V_{OH} undershoot) > 2 V at V_{CC} = 3.3 V, T_{amb} = 25˚C.
- All active components on chip
- RC or crystal oscillator configuration
- Output capability: standard (except for R_{TC} and C_{TC})
- I_{CC} category: MSI

APPLICATIONS

- Control Counters
- Timers
- Frequency Dividers
- Time-delay circuits

DESCRIPTION

The 74LV4060 is a low-voltage Si-gate CMOS device and is pin and function compatible with the 74HC/HCT4060.

The 74LV4060 is a 14-stage ripple-carry counter/divider and oscillator with three oscillator terminals (RS, R_{TC} and C_{TC}), ten buffered outputs (Q_3 to Q_9 and Q_{11} to Q_{13}) and an overriding asynchronous master reset (MR). The oscillator configuration allows design of either RC or crystal oscillator circuits. The oscillator may be replaced by an external clock signal at input RS. In this case, keep the oscillator pins (R_{TC} and C_{TC}) floating.

The counter advances on the negative-going transition of RS. A HIGH level on MR resets the counter (Q_3 to Q_9 and Q_{11} to Q_{13} = LOW), independent of the other input conditions.

QUICK REFERENCE DATA

GND = 0 V; T_{amb} = 25˚C; $t_r = t_f \leq 2.5$ ns

SYMBOL	PARAMETER	CONDITIONS	TYPICAL	UNIT
	Propagation delay	C_L = 15 pF		
	RS to Q_3	V_{CC} = 3.3 V	29	
t_{PHL}/t_{PLH}	Q_n to Q_{n+1}		6	ns
t_{PHL}	MR to Q_n		16	
f_{max}	Maximum clock frequency		99	MHz
C_1	Input capacitance		3.5	pF
C_{PD}	Power dissipation capacitance per package	Notes 1, 2 and 3	40	pF

NOTES:

1. C_{PD} is used to determine the dynamic power dissipation (P_D in μW)
   $P_D = C_{PD} \times V_{CC}^2 \times f_i + \Sigma (C_L \times V_{CC}^2 \times f_o)$ where:
   f_i = input frequency in MHz; C_L = output load capacity in pF;
   f_o = output frequency in MHz; V_{CC} = supply voltage in V;
   $\Sigma (C_L \times V_{CC}^2 \times f_o)$ = sum of the outputs.
2. The condition is V_1 = GND to V_{CC}
3. For formula on dynamic power dissipation, see the following pages.

ORDERING INFORMATION

PACKAGES	TEMPERATURE RANGE	OUTSIDE NORTH AMERICA	NORTH AMERICA	PKG. DWG. #
16-Pin Plastic DIL	–40°C to +125°C	74LV4060 N	74LV4060 N	SOT38-4
16-Pin Plastic SO	–40°C to +125°C	74LV4060 D	74LV4060 D	SOT109-1
16-Pin Plastic SSOP Type II	–40°C to +125°C	74LV4060 DB	74LV4060 DB	SOT338-1
16-Pin Plastic TSSOP Type I	–40°C to +125°C	74LV4060 PW	74LV4060PW DH	SOT403-1

PIN DESCRIPTION

PIN NO.	SYMBOL	FUNCTION
1, 2, 3	Q_{11} to Q13	Counter outputs
7, 5, 4, 6, 15, 13, 15	Q_3 to Q_9	Counter outputs
8	GND	Ground (0 V)
9	C_{TC}	External capacitor connection
10	R_{TC}	External resistor connection
11	RS	Clock input/oscillator pin
12	MR	Master reset
16	V_{CC}	Positive supply voltage

LOGIC SYMBOL

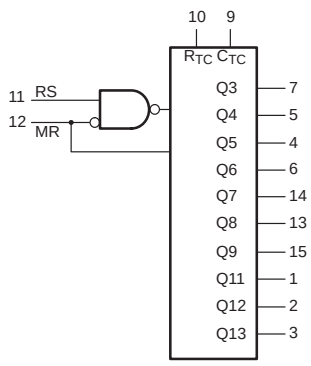

SV00307

PIN CONFIGURATION

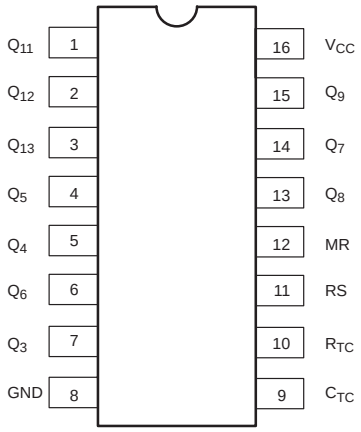

SV00308

LOGIC SYMBOL (IEEE/IEC)

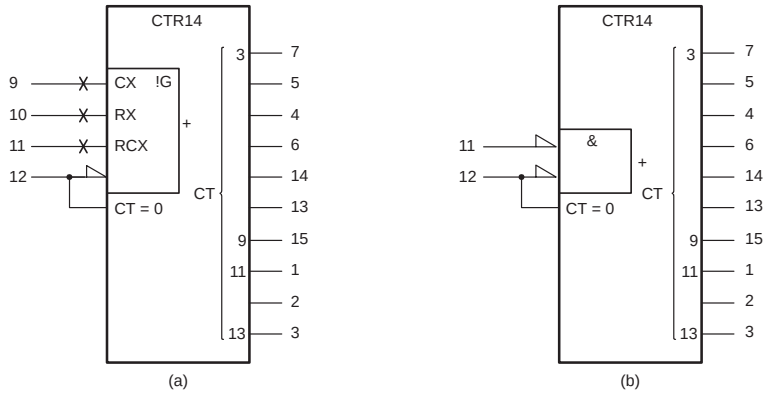

SV00311

DYNAMIC POWER DISSIPATION

GND = 0 V; T_{amb} = 25 °C

PARAMETER	V_{CC} (V)	TYPICAL FORMULA FOR P_D (μW)[1]
Total dynamic power dissipation when using the on–chip oscillator (P_D)	1.2	$C_{PD} \times f_{osc} \times V_{CC}^2 + \Sigma (C_L \times V_{CC}^2 \times f_o) + 2C_t \times V_{CC}^2 \times f_{osc} + 16 \times V_{CC}$
	2.0	$C_{PD} \times f_{osc} \times V_{CC}^2 + \Sigma (C_L \times V_{CC}^2 \times f_o) + 2C_t \times V_{CC}^2 \times f_{osc} + 460 \times V_{CC}$
	3.0	$C_{PD} \times f_{osc} \times V_{CC}^2 + \Sigma (C_L \times V_{CC}^2 \times f_o) + 2C_t \times V_{CC}^2 \times f_{osc} + 1000 \times V_{CC}$

NOTE:

1. Where: f_o = output frequency in MHz; f_{osc} = oscillator frequency in MHz; $\Sigma (C_L \times V_{CC}^2 \times f_o)$ = sum of the outputs; C_L = output load capacitance in pF; C_t = timing capacitance in pF; V_{CC} = supply voltage in V.

FUNCTIONAL DIAGRAM

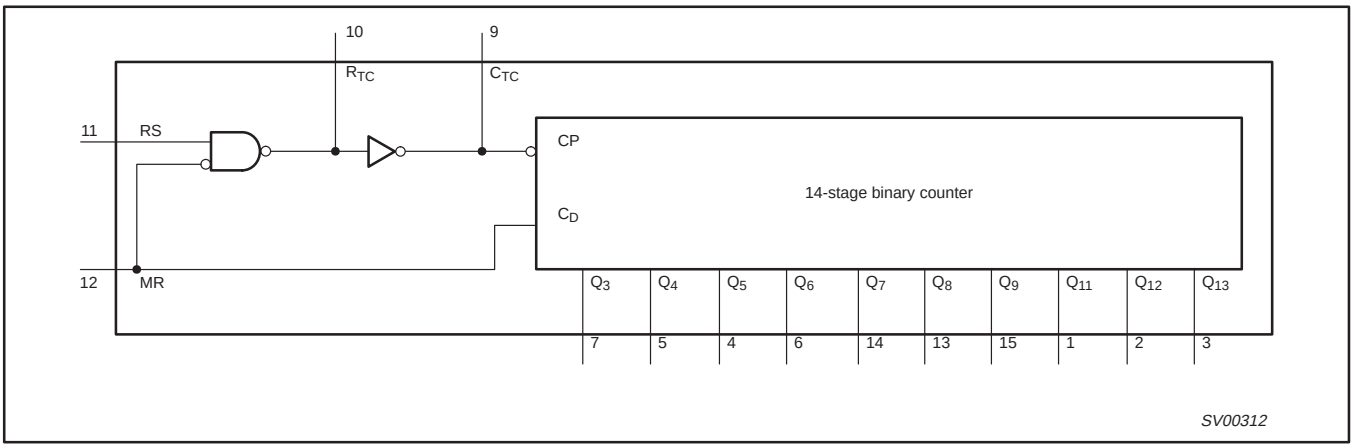

LOGIC DIAGRAM

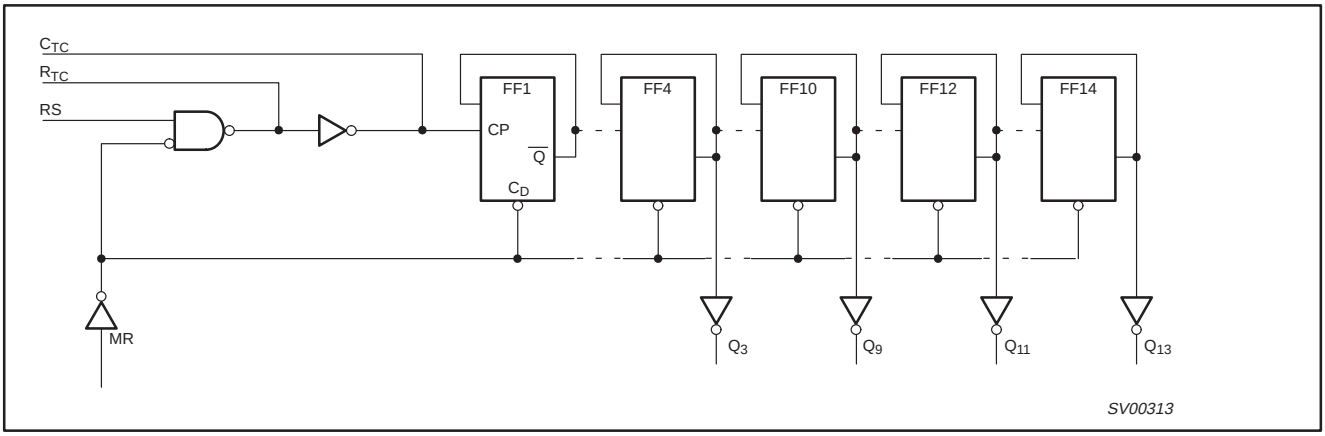

TIMING DIAGRAM

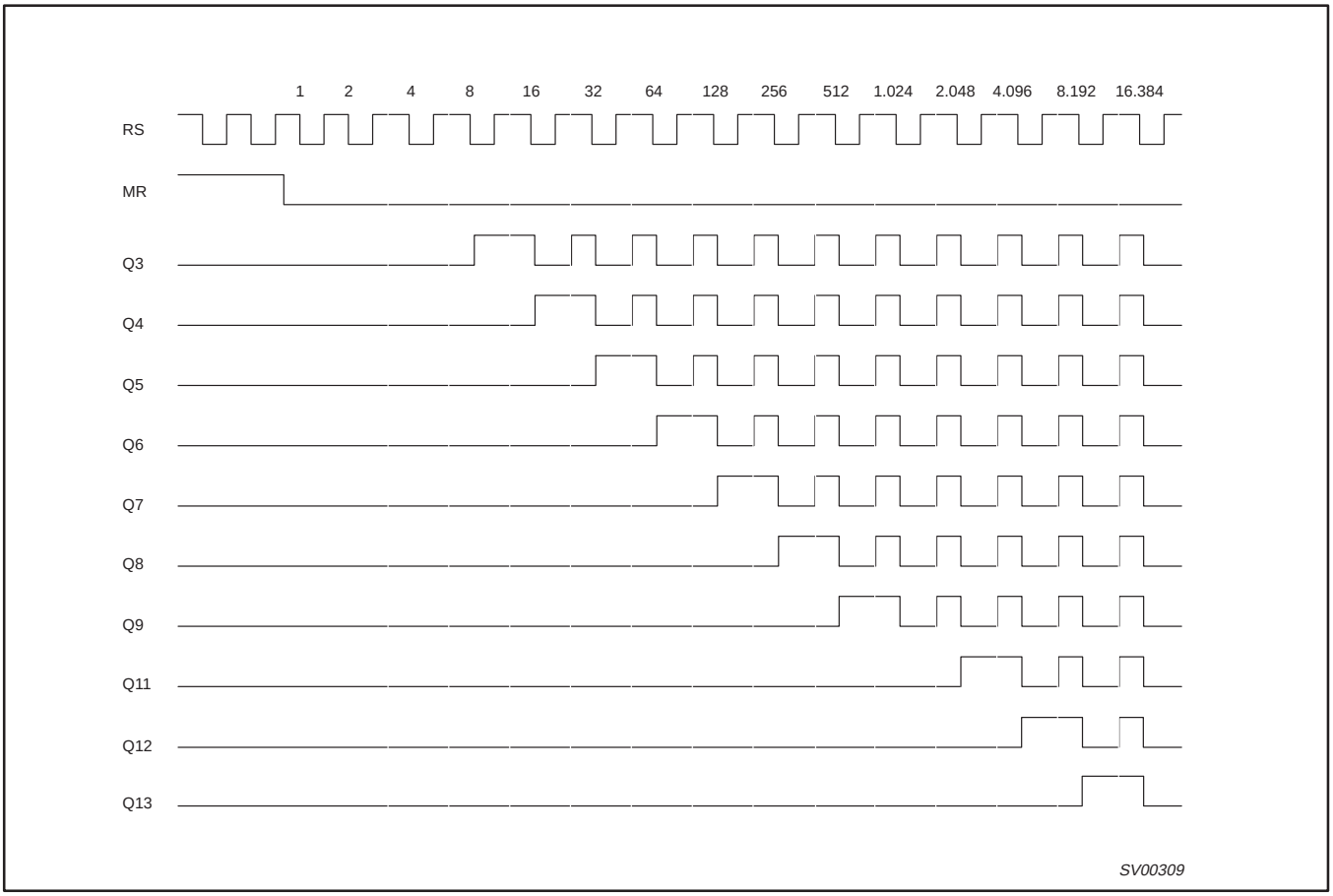

ABSOLUTE MAXIMUM RATINGS[1, 2]

In accordance with the Absolute Maximum Rating System (IEC 134)
Voltages are referenced to GND (ground = 0V)

SYMBOL	PARAMETER	CONDITIONS	RATING	UNIT
V_{CC}	DC supply voltage		–0.5 to +7.0	V
$\pm I_{IK}$	DC input diode current	$V_I < -0.5$ or $V_I > V_{CC} + 0.5V$	20	mA
$\pm I_{OK}$	DC output diode current	$V_O < -0.5$ or $V_O > V_{CC} + 0.5V$	50	mA
$\pm I_O$	DC output source or sink current – standard outputs	$-0.5V < V_O < V_{CC} + 0.5V$	25	mA
$\pm I_{GND}$, $\pm I_{CC}$	DC V_{CC} or GND current for types with –standard outputs		50	mA
T_{stg}	Storage temperature range		–65 to +150	°C
P_{TOT}	Power dissipation per package –plastic DIL –plastic mini-pack (SO) –plastic shrink mini-pack (SSOP and TSSOP)	for temperature range: –40 to +125°C above +70°C derate linearly with 12mW/K above +70°C derate linearly with 8 mW/K above +60°C derate linearly with 5.5 mW/K	750 500 400	mW

NOTES:

1. Stresses beyond those listed may cause permanent damage to the device. These are stress ratings only and functional operation of the device at these or any other conditions beyond those indicated under “recommended operating conditions” is not implied. Exposure to absolute-maximum-rated conditions for extended periods may affect device reliability.
2. The input and output voltage ratings may be exceeded if the input and output current ratings are observed.

RECOMMENDED OPERATING CONDITIONS

SYMBOL	PARAMETER	CONDITIONS	MIN	TYP.	MAX	UNIT
V_{CC}	DC supply voltage	See Note[1]	1.0	3.3	5.5	V
V_I	Input voltage		0	–	V_{CC}	V
V_O	Output voltage		0	–	V_{CC}	V
T_{amb}	Operating ambient temperature range in free air	See DC and AC characteristics	–40 –40		+85 +125	°C
t_r, t_f	Input rise and fall times	V_{CC} = 1.0V to 2.0V V_{CC} = 2.0V to 2.7V V_{CC} = 2.7V to 3.6V V_{CC} = 3.6V to 5.5V	– – – –	– – – –	500 200 100 50	ns/V

NOTES:
1. The LV is guaranteed to function down to V_{CC} = 1.0V (input levels GND or V_{CC}); DC characteristics are guaranteed from V_{CC} = 1.2V to V_{CC} = 5.5V.

DC CHARACTERISTICS

Over operating conditions, voltages are referenced to GND (ground = 0 V)

SYMBOL	PARAMETER	TEST CONDITIONS	LIMITS					UNIT
			-40°C to +85°C			-40°C to +125°C		
			MIN	TYP[1]	MAX	MIN	MAX	
V_{IH}	HIGH level Input voltage MR input	V_{CC} = 1.2V	0.9	–	–	0.9	–	V
		V_{CC} = 2.0V	1.4	–	–	1.4	–	
		V_{CC} = 2.7 to 3.6V	2.0	–	–	2.0	–	
		V_{CC} = 4.5 to 5.5V	0.7 * V_{CC}	–	–	0.7 * V_{CC}	–	
V_{IL}	LOW level Input voltage MR input	V_{CC} = 1.2V	–	–	0.3	–	0.3	V
		V_{CC} = 2.0V	–	–	0.6	–	0.6	
		V_{CC} = 2.7 to 3.6V	–	–	0.8	–	0.8	
		V_{CC} = 4.5 to 5.5	–	–	0.3 * V_{CC}	–	0.3 * V_{CC}	
V_{IH}	HIGH level Input voltage RS input	V_{CC} = 1.2V	1.0	–	–	1.0	–	V
		V_{CC} = 2.0V	1.6	–	–	1.6	–	
		V_{CC} = 2.7 to 3.6V	2.4	–	–	2.4	–	
		V_{CC} = 4.5 to 5.5V	0.8 * V_{CC}	–	–	0.8 * V_{CC}	–	
V_{IL}	LOW level Input voltage RS input	V_{CC} = 1.2V	–	–	0.2	–	0.2	V
		V_{CC} = 2.0V	–	–	0.4	–	0.4	
		V_{CC} = 2.7 to 3.6V	–	–	0.5	–	0.5	
		V_{CC} = 4.5 to 5.5	–	–	0.2 * V_{CC}	–	0.2 * V_{CC}	
V_{OH}	HIGH level output voltage; R_{TC} output	V_{CC} = 1.2V; RS = GND and MR = GND; $-I_O$ = 3.4mA	–	–	–	–	–	V
		V_{CC} = 2.0V; RS = GND and MR = GND; $-I_O$ = 3.4mA	–	–	–	–	–	
		V_{CC} = 2.7V; RS = GND and MR = GND; $-I_O$ = 3.4mA	–	–	–	–	–	
		V_{CC} = 3.0V; RS = GND and MR = GND; $-I_O$ = 3.4mA	2.40	2.82	–	2.20	–	
		V_{CC} = 4.5V; RS = GND and MR = GND; $-I_O$ = 3.4mA	–	–	–	–	–	

SYMBOL	PARAMETER	TEST CONDITIONS	LIMITS					UNIT
			-40°C to +85°C			-40°C to +125°C		
V_{OH}	HIGH level output voltage; R_{TC} output	V_{CC} = 1.2V; RS = V_{CC} and MR = V_{CC}; $-I_O$ = 0.8mA	–	–	–	–	–	V
		V_{CC} = 2.0V; RS = V_{CC} and MR = V_{CC}; $-I_O$ = 0.8mA	–	–	–	–	–	
		V_{CC} = 2.7V; RS = V_{CC} and MR = V_{CC}; $-I_O$ = 0.8mA	–	–	–	–	–	
		V_{CC} = 3.0V; RS = V_{CC} and MR = V_{CC}; $-I_O$ = 0.8mA	2.40	2.82	–	2.20	–	
		V_{CC} = 4.5V; RS = V_{CC} and MR = V_{CC}; $-I_O$ = 0.8mA	–	–	–	–	–	
V_{OH}	HIGH level output voltage; R_{TC} output	V_{CC} = 1.2V; RS = GND and MR = GND; $-I_O$ = 100µA	1.0	1.2	–	1.0	–	V
		V_{CC} = 2.0V; RS = GND and MR = GND; $-I_O$ = 100µA	1.8	2.0	–	1.8	–	
		V_{CC} = 2.7V; RS = GND and MR = GND; $-I_O$ = 100µA	–	–	–	–	–	
		V_{CC} = 3.0V; RS = GND and MR = GND; $-I_O$ = 100µA	2.8	3.0	–	2.8	–	
		V_{CC} = 4.5V; RS = GND and MR = GND; $-I_O$ = 100µA	–	–	–	–	–	
V_{OH}	HIGH level output voltage; R_{TC} output	V_{CC} = 1.2V; RS = V_{CC} and MR = V_{CC}; $-I_O$ = 100µA	1.0	1.2	–	1.0	–	V
		V_{CC} = 2.0V; RS = V_{CC} and MR = V_{CC}; $-I_O$ = 100µA	1.8	2.0	–	1.8	–	
		V_{CC} = 2.7V; RS = V_{CC} and MR = V_{CC}; $-I_O$ = 100µA	–	–	–	–	–	
		V_{CC} = 3.0V; RS = V_{CC} and MR = V_{CC}; $-I_O$ = 100µA	2.8	3.0	–	2.8	–	
		V_{CC} = 4.5V; RS = V_{CC} and MR = V_{CC}; $-I_O$ = 100µA	–	–	–	–	–	
V_{OH}	HIGH level output voltage; C_{TC} output	V_{CC} = 1.2V; RS = V_{IH} and MR = V_{IL}; $-I_O$ = 3.8mA		1.2	–	–	–	V
		V_{CC} = 2.0V; RS = V_{IH} and MR = V_{IL}; $-I_O$ = 3.8mA	–	–	–	–	–	
		V_{CC} = 2.7V; RS = V_{IH} and MR = V_{IL}; $-I_O$ = 3.8mA	–	–	–	–	–	
		V_{CC} = 3.0V; RS = V_{IH} and MR = V_{IL}; $-I_O$ = 3.8mA	2.40	2.82	–	2.20	–	
		V_{CC} = 4.5V; RS = V_{IH} and MR = V_{IL}; $-I_O$ = 3.8mA	–	–	–	–	–	
V_{OH}	HIGH level output voltage; except R_{TC} output	V_{CC} = 1.2V; V_I = V_{IH} and V_I = V_{IL}; $-I_O$ = 100µA	1.0	1.2	–	1.0	–	V
		V_{CC} = 2.0V; V_I = V_{IH} and V_I = V_{IL}; $-I_O$ = 100µA	1.8	2.0	–	1.8	–	
		V_{CC} = 2.7V; V_I = V_{IH} and V_I = V_{IL}; $-I_O$ = 100µA	–	–	–	–	–	
		V_{CC} = 3.0V; V_I = V_{IH} and V_I = V_{IL}; $-I_O$ = 100µA	2.8	3.0	–	2.8	–	
		V_{CC} = 4.5V; V_I = V_{IH} and V_I = V_{IL}; $-I_O$ = 100µA	–	–	–	–	–	

SYMBOL	PARAMETER	TEST CONDITIONS	LIMITS					UNIT
			-40°C to +85°C			-40°C to +125°C		
V_{OH}	HIGH level output voltage; except R_{TC} and C_{TC} outputs	V_{CC} = 1.2V; $V_I = V_{IH}$ and $V_I = V_{IL}$; $-I_O$ = 6mA	–	–	–	–	–	V
		V_{CC} = 2.0V; $V_I = V_{IH}$ and $V_I = V_{IL}$; $-I_O$ = 6mA	–	–	–	–	–	
		V_{CC} = 2.7V; $V_I = V_{IH}$ and $V_I = V_{IL}$; $-I_O$ = 6mA	–	–	–	–	–	
		V_{CC} = 3.0V; $V_I = V_{IH}$ and $V_I = V_{IL}$; $-I_O$ = 6mA	2.40	2.82	–	2.20	–	
		V_{CC} = 4.5V; $V_I = V_{IH}$ and $V_I = V_{IL}$; $-I_O$ = 6mA	–	–	–	–	–	
V_{OL}	LOW level output voltage; R_{TC} output	V_{CC} = 1.2V; RS = V_{CC} and MR = GND; $-I_O$ = 3.4mA	–	–	–	–	–	V
		V_{CC} = 2.0V; RS = V_{CC} and MR = GND; $-I_O$ = 3.4mA	–	–	–	–	–	
		V_{CC} = 2.7V; RS = V_{CC} and MR = GND; $-I_O$ = 3.4mA	–	–	–	–	–	
		V_{CC} = 3.0V; RS = V_{CC} and MR = GND; $-I_O$ = 3.4mA	–	0.25	0.40	–	0.50	V
		V_{CC} = 4.5V; RS = V_{CC} and MR = GND; $-I_O$ = 3.4mA	–	–	–	–	–	V
V_{OL}	LOW level output voltage; R_{TC} output	V_{CC} = 1.2V; RS = V_{CC} and MR = GND; $-I_O$ = 100µA	–	0	0.2	–	0.2	V
		V_{CC} = 2.0V; RS = V_{CC} and MR = GND; $-I_O$ = 100µA	–	0	0.2	–	0.2	
		V_{CC} = 2.7V; RS = V_{CC} and MR = GND; $-I_O$ = 100µA	–	–	–	–	–	
		V_{CC} = 3.0V; RS = V_{CC} and MR = GND; $-I_O$ = 100µA	–	0	0.2	–	0.2	
		V_{CC} = 4.5V; RS = V_{CC} and MR = GND; $-I_O$ = 100µA	–	–	–	–	–	
V_{OL}	LOW level output voltage; C_{TC} output	V_{CC} = 1.2V; RS = V_{IH} and MR = V_{IL}; $-I_O$ = 3.8mA	–	–	–	–	–	V
		V_{CC} = 2.0V; RS = V_{IH} and MR = V_{IL}; $-I_O$ = 3.8mA	–	–	–	–	–	
		V_{CC} = 2.7V; RS = V_{IH} and MR = V_{IL}; $-I_O$ = 3.8mA	–	–	–	–	–	
		V_{CC} = 3.0V; RS = V_{IH} and MR = V_{IL}; $-I_O$ = 3.8mA	–	0.25	0.40	–	0.50	
		V_{CC} = 4.5V; RS = V_{IH} and MR = V_{IL}; $-I_O$ = 3.8mA	–	–	–	–	–	
V_{OL}	LOW level output voltage; except R_{TC} output	V_{CC} = 1.2V; $V_I = V_{IH}$ and $V_I = V_{IL}$; $-I_O$ = 100µA	–	0	0.2	–	0.2	V
		V_{CC} = 2.0V; $V_I = V_{IH}$ and $V_I = V_{IL}$; $-I_O$ = 100µA	–	0	0.2	–	0.2	
		V_{CC} = 2.7V; $V_I = V_{IH}$ and $V_I = V_{IL}$; $-I_O$ = 100µA	–	–	–	–	–	
		V_{CC} = 3.0V; $V_I = V_{IH}$ and $V_I = V_{IL}$; $-I_O$ = 100µA	–	0	0.2	–	0.2	
		V_{CC} = 4.5V; $V_I = V_{IH}$ and $V_I = V_{IL}$; $-I_O$ = 100µA	–	–	–	–	–	

SYMBOL	PARAMETER	TEST CONDITIONS	LIMITS					UNIT
			-40°C to +85°C			-40°C to +125°C		
V_{OL}	HIGH level output voltage; except R_{TC} and C_{TC} outputs	V_{CC} = 1.2V; $V_I = V_{IH}$ and $V_I = V_{IL}$; $-I_O$ = 6mA	–	–	–	–	–	V
		V_{CC} = 2.0V; $V_I = V_{IH}$ and $V_I = V_{IL}$; $-I_O$ = 6mA	–	–	–	–	–	
		V_{CC} = 2.7V; $V_I = V_{IH}$ and $V_I = V_{IL}$; $-I_O$ = 6mA	–	0.25	0.40	–	0.50	
		V_{CC} = 3.0V; $V_I = V_{IH}$ and $V_I = V_{IL}$; $-I_O$ = 6mA	–	–	–	–	–	
		V_{CC} = 4.5V; $V_I = V_{IH}$ and $V_I = V_{IL}$; $-I_O$ = 6mA	–	–	–	–	–	
I_I	Input leakage current	V_{CC} = 5.5V; $V_I = V_{CC}$ or GND	–	–	1.0	–	1.0	μA
I_{CC}	Quiescent supply current	V_{CC} = 3.6V; $V_I = V_{CC}$ or GND; I_O = 0	–	–	20	–	160	μA
	Quiescent supply current	V_{CC} = 5.5V; $V_I = V_{CC}$ or GND; I_O = 0	–	–	–	–	80	
ΔI_{CC}	Additional quiescent supply current per input pin	V_{CC} = 2.7V to 3.6V; $V_I = V_{CC}$ –0.6V; I_O = 0	–	–	500	–	850	μA

NOTE:
1. All typical values are measured at T_{amb} = 25°C.

AC CHARACTERISTICS

GND = 0V; $t_r = t_f$ = 2.5ns; C_L = 50pF; R_L = 500Ω

SYMBOL	PARAMETER	WAVEFORM	CONDITION	LIMITS –40 to +85 °C			LIMITS –40 to +125 °C		UNIT
			V_{CC}(V)	MIN	TYP[1]	MAX	MIN	MAX	
t_{PHL}/t_{PLH}	Propagation delay RS to Q_3	Figures, 6, 8	1.2	–	180	–	–	–	ns
			2.0	–	52	84	–	105	
			2.7	–	42	66	–	83	
			3.0 to 3.6	–	33[2]	53	–	66	
			4.5 to 5.5	–	24	39	–	49	
t_{PHL}/t_{PLH}	Propagation delay Q_n to Q_{n+1}	Figures 7, 8	1.2	–	40	–	–	–	ns
			2.0	–	14	23	–	29	
			2.7	–	10	16	–	20	
			3.0 to 3.6	–	8[2]	13	–	16	
			4.5 to 5.5	–	6	9	–	11	
t_{PHL}	Propagation delay MR to Q_n	Figures 7, 8	1.2	–	100	–	–	–	ns
			2.0	–	29	46	–	58	
			2.7	–	24	39	–	49	
			3.0 to 3.6	–	19[2]	31	–	39	
			4.5 to 5.5	–	14	23	–	29	
t_W	Clock pulse width RS; HIGH or LOW	Figure 6	2.0	34	9	–	38	–	ns
			2.7	25	6	–	30	–	
			3.0 to 3.6	20	5	–	24	–	
			4.5 to 5.5	16	4	–	20	–	
t_W	Master reset pulse width MR; HIGH	Figure 7	2.0	34	10	–	38	–	ns
			2.7	25	8	–	30	–	
			3.0 to 3.6	20	6	–	24	–	
			4.5 to 5.5	16	4	–	20	–	

SYMBOL	PARAMETER	WAVEFORM	CONDITION	LIMITS –40 to +85 °C			LIMITS –40 to +125 °C		UNIT
			V_{CC}(V)	MIN	TYP[1]	MAX	MIN	MAX	
t_{rem}	Removal time MR to RS	Figure 7	2.0	29	18	–	37	–	ns
			2.7	26	16	–	32	–	
			3.0 to 3.6	18	11	–	23	–	
			4.5 to 5.5	12	7	–	15	–	
f_{max}	Maximum clock pulse frequency	Figure 6	2.0	14	40	–	9	–	MHz
			2.7	19	70	–	12	–	
			3.0 to 3.6	24	90	–	15	–	
			4.5 to 5.5	30	100	–	19	–	

NOTE:
Unless otherwise stated, all typical values are at T_{amb} = 25°C.
1. Typical value measured at V_{CC} = 3.3V.
2. Typical value measured at V_{CC} = 5.0V.

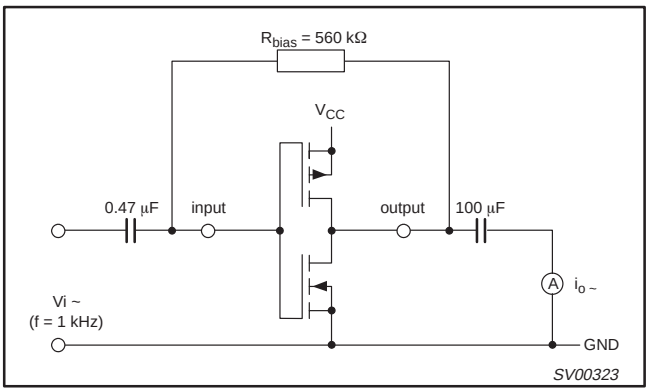

Figure 1.
Test set-up for measuring forward transconductance
$g_{fs} = di_o/dv_i$ at v_o is constant (see also graph Figure 2); MR = LOW.

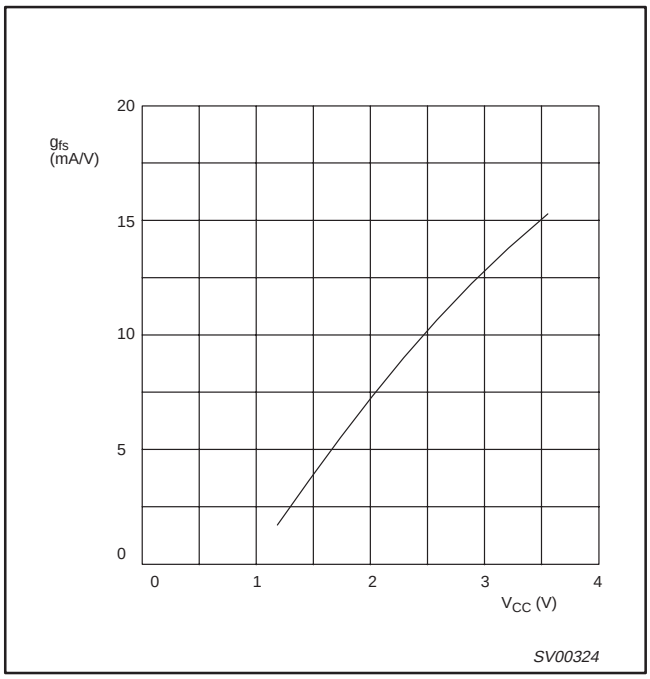

Figure 2.
Typical forward transconductance g_{fs} as a function of the supply voltage V_{CC} at T_{amb} = 25°C.

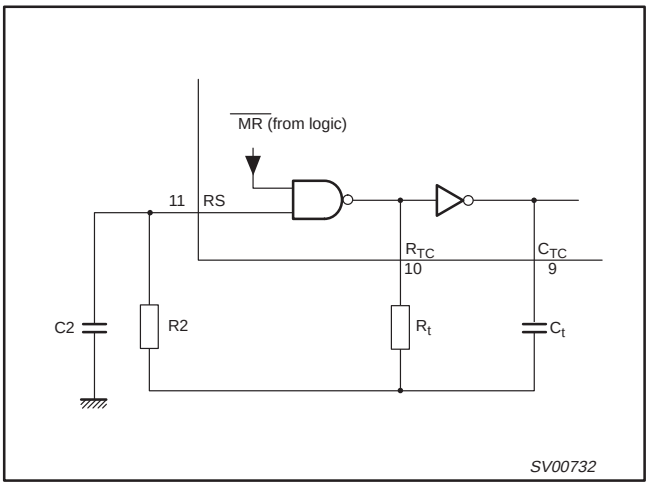

Figure 3.

Example of an RC oscillator. Typical formula for oscillator frequency:

$$f_{OSC} = \frac{1}{2.5 \times R_t \times C_t}$$

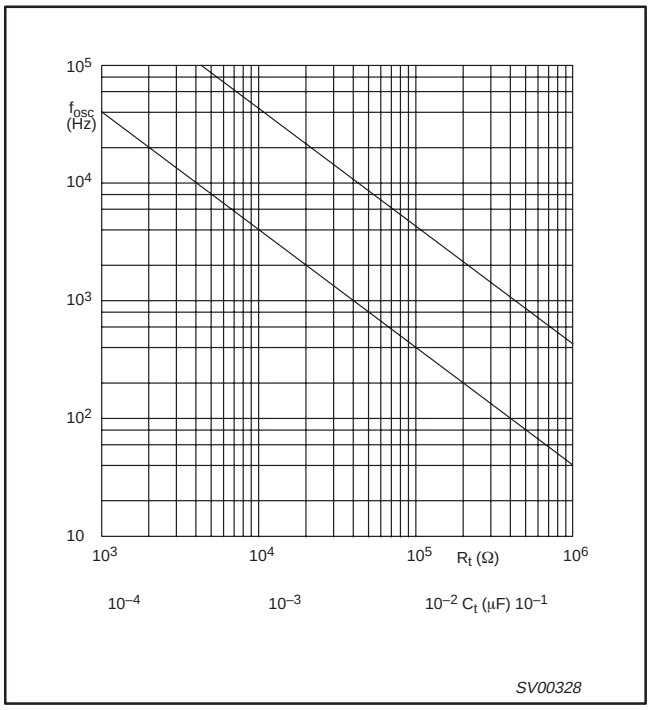

Figure 4.

RC oscillator frequency as a function of R_t and C_t at V_{CC} = 1.2 to 3.6 V; T_{amb} = 25˚C.
C_t curve at R_t = 100 kΩ; R2 = 200 kΩ.
R_t curve at C_t = 1 nF; R2 = 2 x R_t.

TIMING COMPONENTS LIMITATIONS

The oscillator frequency is mainly determined by $R_t \cdot C_t$, provided R2 ≈ 2R_t and R2 · C2 ≪ $R_t \cdot C_t$. The function of R2 is to minimize the influence of the forward voltage across the input protection diodes on the frequency. The stray capacitance C2 should be kept as small as possible. In consideration of accuracy, C_t must be larger than the inherent stray capacitance. R_t must be larger than the 'ON' resistance in series with it, which typically is 280 Ω at V_{CC} = 1.2 V, 130 Ω at V_{CC} = 2.0 V and 100 Ω at V_{CC} 3.0 V. The recommended values for these components to maintain agreement with the typical oscillation formula are: C_t > 50pF, up to any practical value, 10 kΩ < R_t < 1 MΩ. In order to avoid start-up problems, $R_t \geq$ 1 kΩ.

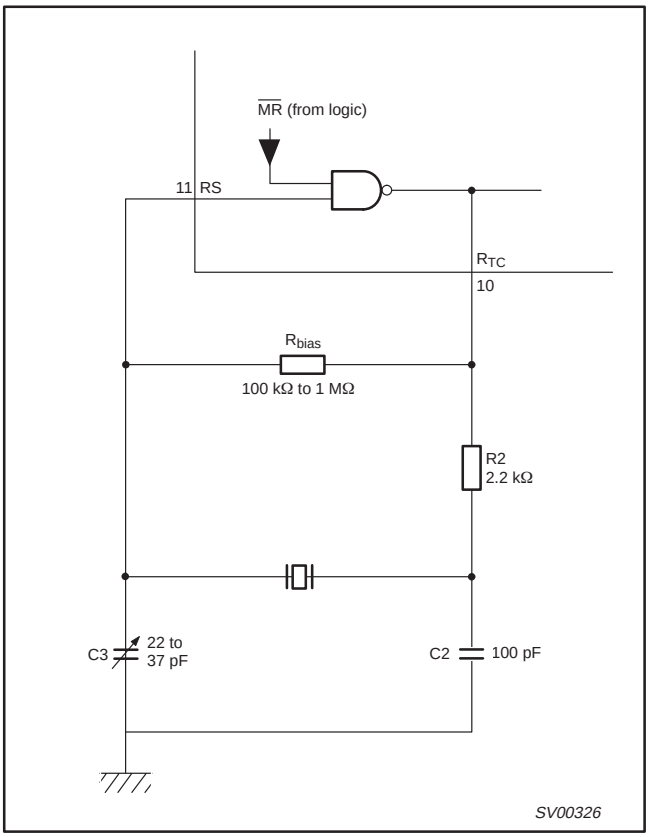

Figure 5. External components connection for a typical crystal oscillator

R2 is the power limiting resistor. For starting and maintaining oscillation, a minimum transconductance is necessary, so R2 should not be too large. A practical value for R2 is 2.2 kΩ.

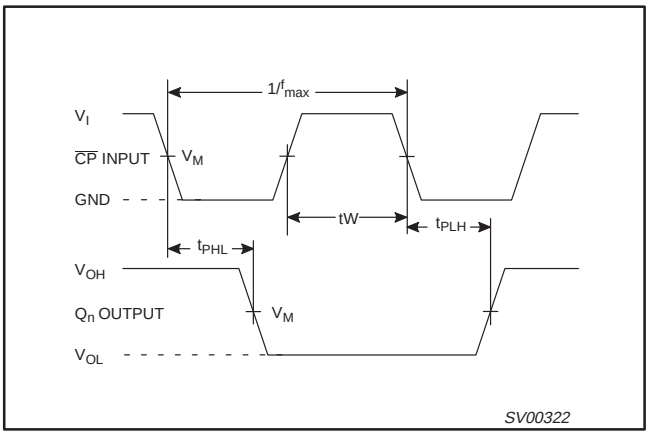

Figure 6.

Waveforms showing the clock (RS) to output (Q_3) propagation delays, the clock pulse width, the output transition times and the maximum clock frequency.

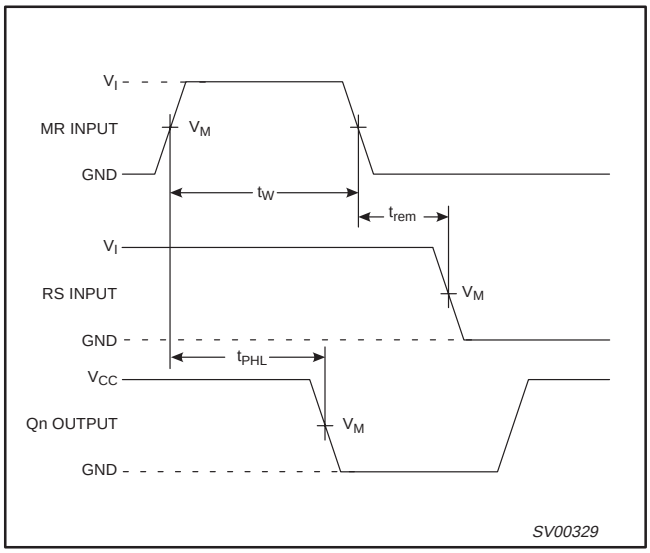

Figure 7.

Waveforms showing the master reset (MR) pulse width, the master reset to output (Q_n) propagation delays and the master reset to clock (RS) removal time.

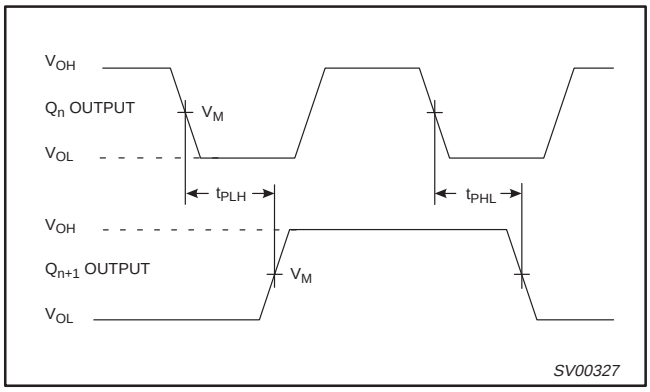

Figure 8.

Waveforms showing the output Q_n to output $_{n+1}$ propagation delays.

NOTES:

1. V_M = 1.5 V at $V_{CC} \geq$ 2.7 V and $\leq$ 3.6 V
   $V_M = 0.5 \cdot V_{CC}$ at V_{CC} < 2.7 V and $\geq$ 4.5 V.
2. V_{OL} and V_{OH} are the typical output voltage drop that occur with the output load.

TEST CIRCUIT

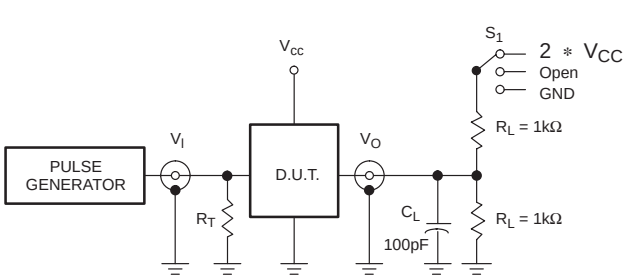

Test Circuit for Outputs

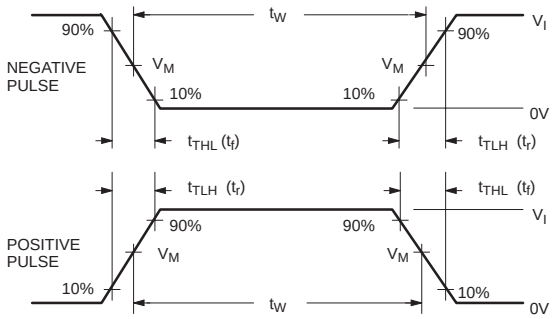

V_M = 1.5V
Input Pulse Definition

SWITCH POSITION

TEST	S_1
t_{PLH}/t_{PHL}	Open

V_{CC}	V_I
< 2.7V	V_{CC}
2.7–3.6V	2.7V
≥ 4.5 V	V_{CC}

DEFINITIONS

R_L = Load resistor

C_L = Load capacitance includes jig and probe capacitance

R_T = Termination resistance should be equal to Z_{OUT} of pulse generators.

SV00910

Figure 9. Load circuitry for switching times.

DIP16: plastic dual in-line package; 16 leads (300 mil) **SOT38-4**

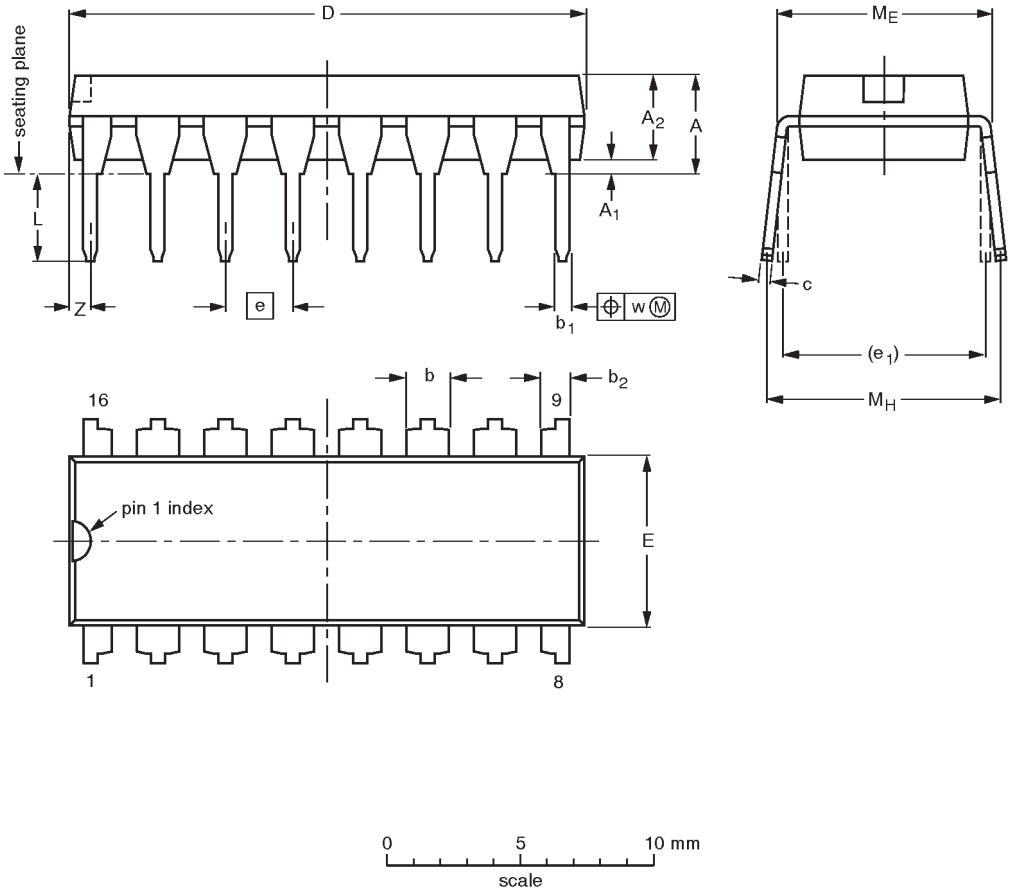

DIMENSIONS (inch dimensions are derived from the original mm dimensions)

UNIT	A max.	A_1 min.	A_2 max.	b	b_1	b_2	c	D (1)	E (1)	e	e_1	L	M_E	M_H	w	Z (1) max.
mm	4.2	0.51	3.2	1.73 1.30	0.53 0.38	1.25 0.85	0.36 0.23	19.50 18.55	6.48 6.20	2.54	7.62	3.60 3.05	8.25 7.80	10.0 8.3	0.254	0.76
inches	0.17	0.020	0.13	0.068 0.051	0.021 0.015	0.049 0.033	0.014 0.009	0.77 0.73	0.26 0.24	0.10	0.30	0.14 0.12	0.32 0.31	0.39 0.33	0.01	0.030

Note

1. Plastic or metal protrusions of 0.25 mm maximum per side are not included.

OUTLINE VERSION	REFERENCES				EUROPEAN PROJECTION	ISSUE DATE
	IEC	JEDEC	EIAJ			
SOT38-4						~~92-11-17~~ 95-01-14

SO16: plastic small outline package; 16 leads; body width 3.9 mm SOT109-1

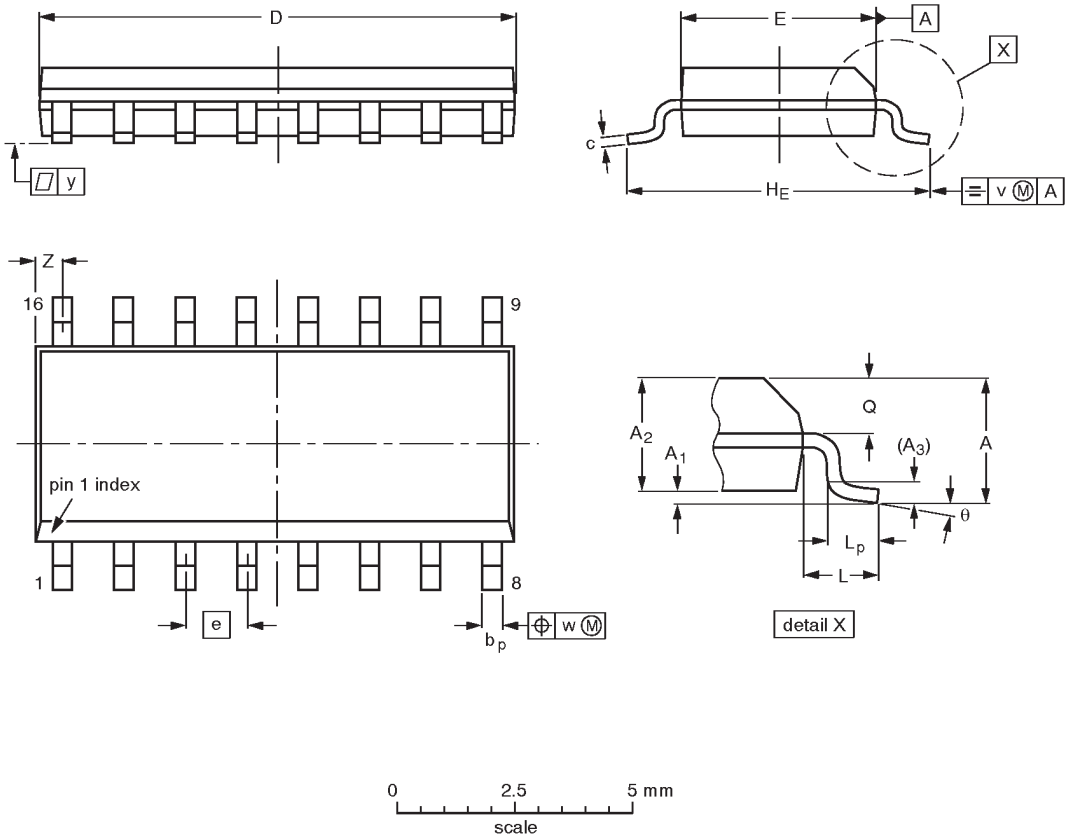

DIMENSIONS (inch dimensions are derived from the original mm dimensions)

UNIT	A max.	A_1	A_2	A_3	b_p	c	D(1)	E(1)	e	H_E	L	L_p	Q	v	w	y	Z(1)	θ
mm	1.75	0.25 0.10	1.45 1.25	0.25	0.49 0.36	0.25 0.19	10.0 9.8	4.0 3.8	1.27	6.2 5.8	1.05	1.0 0.4	0.7 0.6	0.25	0.25	0.1	0.7 0.3	8° 0°
inches	0.069	0.0098 0.0039	0.057 0.049	0.01	0.019 0.014	0.0098 0.0075	0.39 0.38	0.16 0.15	0.050	0.24 0.23	0.041	0.039 0.016	0.028 0.020	0.01	0.01	0.004	0.028 0.012	

Note

1. Plastic or metal protrusions of 0.15 mm maximum per side are not included.

OUTLINE VERSION	REFERENCES				EUROPEAN PROJECTION	ISSUE DATE
	IEC	JEDEC	EIAJ			
SOT109-1	076E07S	MS-012AC				~~91-08-13~~ 95-01-23

SSOP16: plastic shrink small outline package; 16 leads; body width 5.3 mm **SOT338-1**

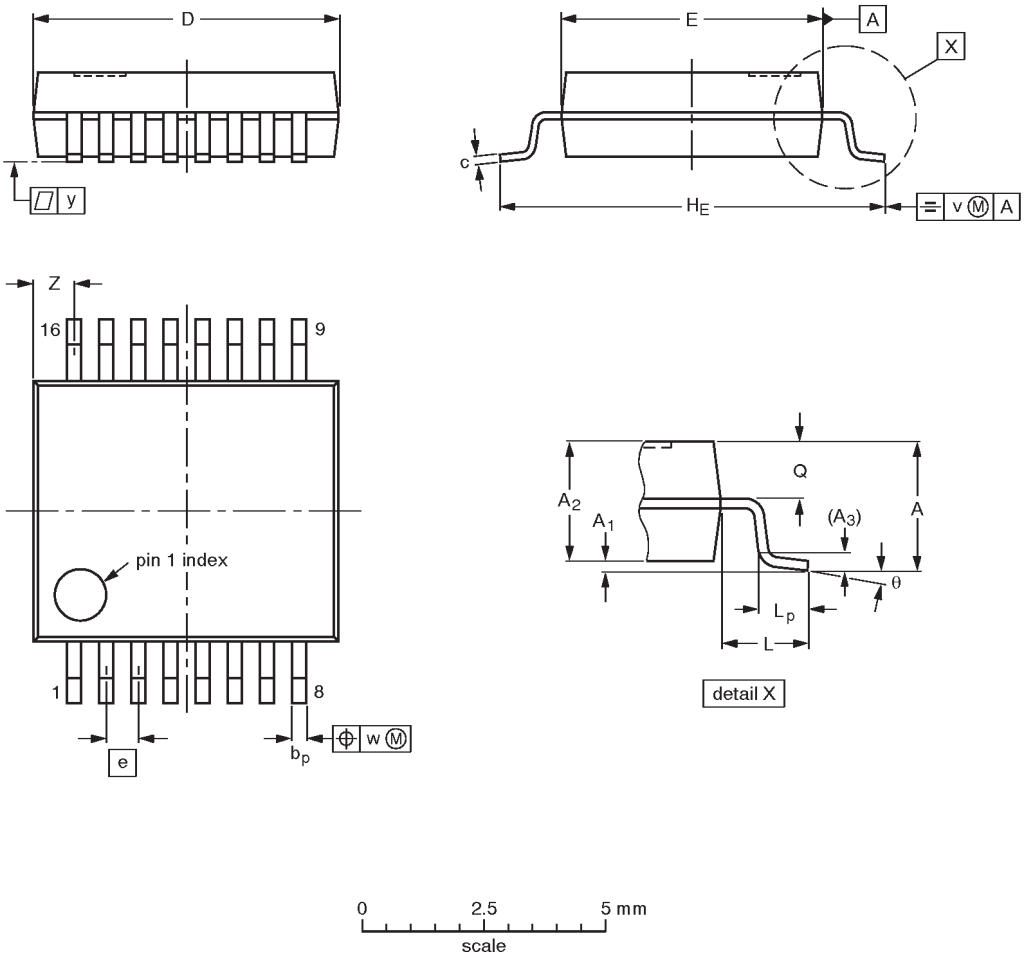

DIMENSIONS (mm are the original dimensions)

UNIT	A max.	A_1	A_2	A_3	b_p	c	D (1)	E (1)	e	H_E	L	L_p	Q	v	w	y	Z (1)	θ
mm	2.0	0.21 0.05	1.80 1.65	0.25	0.38 0.25	0.20 0.09	6.4 6.0	5.4 5.2	0.65	7.9 7.6	1.25	1.03 0.63	0.9 0.7	0.2	0.13	0.1	1.00 0.55	8° 0°

Note

1. Plastic or metal protrusions of 0.25 mm maximum per side are not included.

OUTLINE VERSION	REFERENCES				EUROPEAN PROJECTION	ISSUE DATE
	IEC	JEDEC	EIAJ			
SOT338-1		MO-150AC				~~94-01-14~~ 95-02-04

TSSOP16: plastic thin shrink small outline package; 16 leads; body width 4.4 mm **SOT403-1**

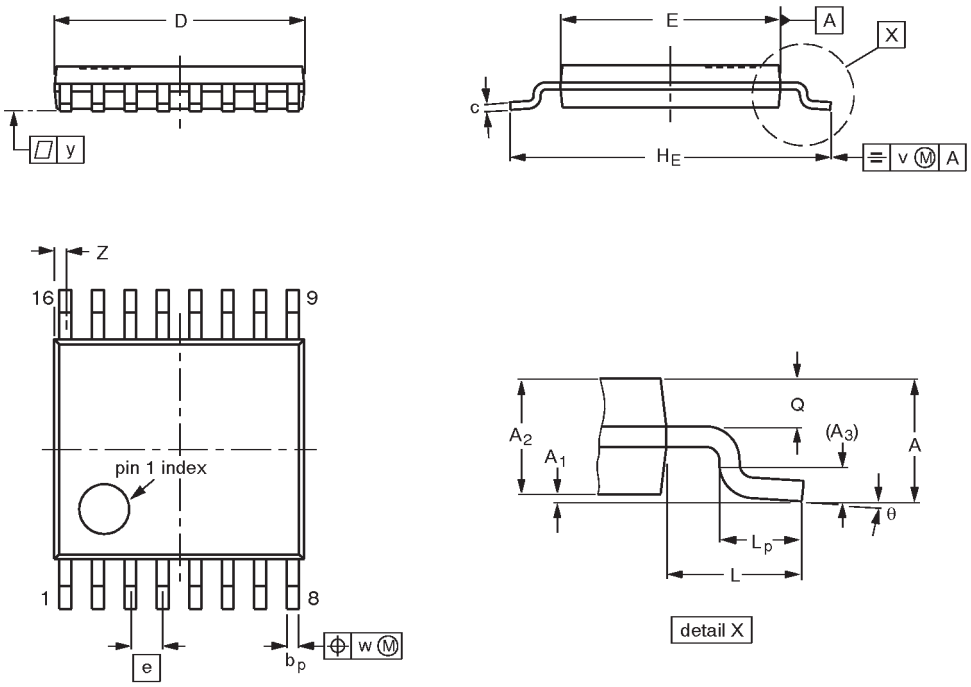

0 2.5 5 mm
scale

DIMENSIONS (mm are the original dimensions)

UNIT	A max.	A_1	A_2	A_3	b_p	c	D (1)	E (2)	e	H_E	L	L_p	Q	v	w	y	Z (1)	θ
mm	1.10	0.15 0.05	0.95 0.80	0.25	0.30 0.19	0.2 0.1	5.1 4.9	4.5 4.3	0.65	6.6 6.2	1.0	0.75 0.50	0.4 0.3	0.2	0.13	0.1	0.40 0.06	8° 0°

Notes

1. Plastic or metal protrusions of 0.15 mm maximum per side are not included.
2. Plastic interlead protrusions of 0.25 mm maximum per side are not included.

OUTLINE VERSION	REFERENCES				EUROPEAN PROJECTION	ISSUE DATE
	IEC	JEDEC	EIAJ			
SOT403-1		MO-153				~~94-07-12~~ 95-04-04

Data sheet status

Data sheet status	Product status	Definition [1]
Objective specification	Development	This data sheet contains the design target or goal specifications for product development. Specification may change in any manner without notice.
Preliminary specification	Qualification	This data sheet contains preliminary data, and supplementary data will be published at a later date. Philips Semiconductors reserves the right to make chages at any time without notice in order to improve design and supply the best possible product.
Product specification	Production	This data sheet contains final specifications. Philips Semiconductors reserves the right to make changes at any time without notice in order to improve design and supply the best possible product.

[1] Please consult the most recently issued datasheet before initiating or completing a design.

Definitions

Short-form specification — The data in a short-form specification is extracted from a full data sheet with the same type number and title. For detailed information see the relevant data sheet or data handbook.

Limiting values definition — Limiting values given are in accordance with the Absolute Maximum Rating System (IEC 134). Stress above one or more of the limiting values may cause permanent damage to the device. These are stress ratings only and operation of the device at these or at any other conditions above those given in the Characteristics sections of the specification is not implied. Exposure to limiting values for extended periods may affect device reliability.

Application information — Applications that are described herein for any of these products are for illustrative purposes only. Philips Semiconductors make no representation or warranty that such applications will be suitable for the specified use without further testing or modification.

Disclaimers

Life support — These products are not designed for use in life support appliances, devices or systems where malfunction of these products can reasonably be expected to result in personal injury. Philips Semiconductors customers using or selling these products for use in such applications do so at their own risk and agree to fully indemnify Philips Semiconductors for any damages resulting from such application.

Right to make changes — Philips Semiconductors reserves the right to make changes, without notice, in the products, including circuits, standard cells, and/or software, described or contained herein in order to improve design and/or performance. Philips Semiconductors assumes no responsibility or liability for the use of any of these products, conveys no license or title under any patent, copyright, or mask work right to these products, and makes no representations or warranties that these products are free from patent, copyright, or mask work right infringement, unless otherwise specified.

Philips Semiconductors
811 East Arques Avenue
P.O. Box 3409
Sunnyvale, California 94088–3409
Telephone 800-234-7381

© Copyright Philips Electronics North America Corporation 1998
All rights reserved. Printed in U.S.A.

print code Date of release: 08-98

Document order number: 9397-750-04658

Let's make things better.

Philips Semiconductors

PHILIPS

Общество с ограниченной ответственностью «МосЧип» ИНН 7719860671 / КПП 771901001
Адрес: 105318, г.Москва, ул.Щербаковская д.3, офис 1107

Данный компонент на территории Российской Федерации

Вы можете приобрести в компании MosChip.

Для оперативного оформления запроса Вам необходимо перейти по данной ссылке:

http://moschip.ru/get-element

Вы можете разместить у нас заказ для любого Вашего проекта, будь то серийное производство или разработка единичного прибора.

В нашем ассортименте представлены ведущие мировые производители активных и пассивных электронных компонентов.

Нашей специализацией является поставка электронной компонентной базы двойного назначения, продукции таких производителей как XILINX, Intel (ex.ALTERA), Vicor, Microchip, Texas Instruments, Analog Devices, Mini-Circuits, Amphenol, Glenair.

Сотрудничество с глобальными дистрибьюторами электронных компонентов, предоставляет возможность заказывать и получать с международных складов практически любой перечень компонентов в оптимальные для Вас сроки.

На всех этапах разработки и производства наши партнеры могут получить квалифицированную поддержку опытных инженеров.

Система менеджмента качества компании отвечает требованиям в соответствии с ГОСТ Р ИСО 9001, ГОСТ РВ 0015-002 и ЭС РД 009

Офис по работе с юридическими лицами:

105318, г.Москва, ул.Щербаковская д.3, офис 1107, 1118, ДЦ «Щербаковский»

Телефон: +7 495 668-12-70 (многоканальный)

Факс: +7 495 668-12-70 (доб.304)

E-mail: info@moschip.ru

Skype отдела продаж:
moschip.ru
moschip.ru_4
moschip.ru_6
moschip.ru_9