molex
one company › a world of innovation

This document was generated on 05/14/2010

PLEASE CHECK WWW.MOLEX.COM FOR LATEST PART INFORMATION

Part Number: 0738090211

Status: Active

Overview: hdm

Description: 2.00mm (.079") Pitch HDM® Board-to-Board Midplane Header, Vertical, Press-Fit, Closed End, Guide Post B Location, F Polarization Key, 72 Circuits

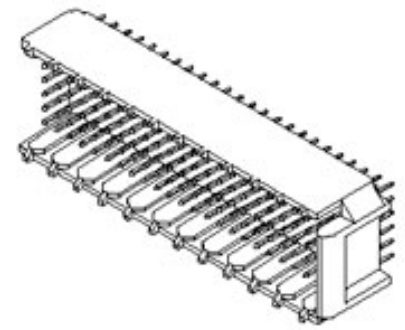

Series

image - Reference only

Documents:

Drawing (PDF) | RoHS Certificate of Compliance (PDF)

Agency Certification

CSA	LR19980
UL	E29179

General

Product Family	Backplane Connectors
Series	73809
Application	Midplane
Component Type	Shroud Housing
Overview	hdm
Product Name	HDM®
Style	N/A

Physical

Circuits (Loaded)	72
Circuits (maximum)	72
Color - Resin	Black
Durability (mating cycles max)	250
First Mate / Last Break	No
Flammability	94V-0
Guide to Mating Part	Yes
Keying to Mating Part	Yes
Material - Metal	Stainless Steel
Material - Resin	High Temperature Thermoplastic
Number of Columns	12
Number of Pairs	Open Pin Field
Number of Rows	6
Orientation	Vertical
PCB Retention	None
Packaging Type	Tube
Pitch - Mating Interface (in)	0.079 In
Pitch - Mating Interface (mm)	2.00 mm
Stackable	Yes
Surface Mount Compatible (SMC)	Yes
Temperature Range - Operating	-55°C to +105°C

Electrical

Current - Maximum per Contact	1A
Data Rate	1.0 Gbps
Real Signals (per 25mm)	72
Voltage - Maximum	250V AC

Material Info

Reference - Drawing Numbers

Packaging Specification	PK-70873-0818
Sales Drawing	SD-73809-001

HDM and High Density Metric are trademarks of Amphenol Corporation

EU RoHS | **China RoHS**

Compliance Status
Not Reviewed

REACH SVHC
Not Reviewed

Halogen-Free Status
Not Reviewed

Need more information on product environmental compliance?

Email productcompliance@molex.com
For a multiple part number RoHS Certificate of Compliance, click here

Please visit the Contact Us section for any non-product compliance questions.

Search Parts in this Series
73809Series

Mates With
73632 HDM PLUS® Board-to-Board Daughtercard Receptacle. 73780 HDM® Board-to-Board Daughtercard Receptacle

This document was generated on 05/14/2010
PLEASE CHECK WWW.MOLEX.COM FOR LATEST PART INFORMATION

NOTES:

1. HOUSING MATERIALS: LIQUID CRYSTAL POLYMER (LCP), GLASS-FILLED, UL94V-0, COLOR: BLACK.
2. THIS PART CONFORMS TO MOLEX PRODUCT SPECIFICATION PS-73670-9999.
3. SEE DRAWINGS SD-73800-001, SD-73801-001, AND SD-73802-001 FOR DIMENSIONAL INFORMATION.
4. PARTS MARKED WITH PART NUMBER AND DATE CODE, ON EITHER SIDE, APPROXIMATELY WHERE SHOWN.
5. PARTS PACKAGED PER PK-70873-0818.

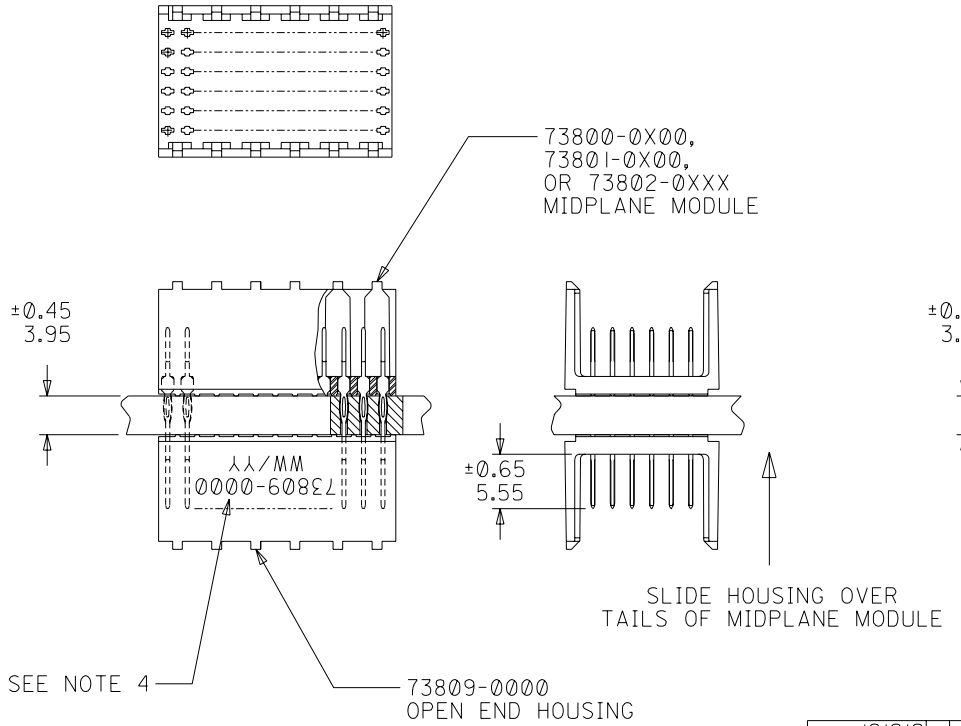

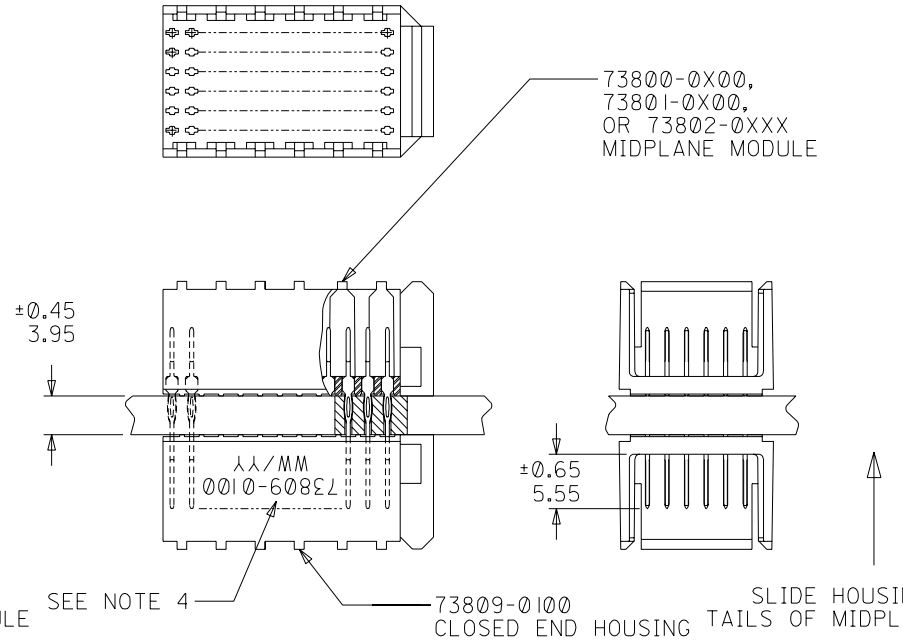

2	B
1	D
SHT	REV

REVISE ON CAD ONLY

REVISED
EC NO. UCP2003-2260
DRWN: THOMAS 03/04/25
CH'K: BINGHAM 03/04/25
APPR: REED 03/04/25
DESCRIPTION
REV: D

QUALITY SYMBOLS
MAJOR ▼ = 0
CRITICAL (C) = 0

GENERAL TOLERANCES: (UNLESS SPECIFIED)

	mm	INCH
4 PLACES	±0.	±.
3 PLACES	±0.	±.
2 PLACES	±0.05	±.
1 PLACE	±0.15	±.
ANGULAR: ± 1/2°		

DRAFT WHERE APPLICABLE MUST REMAIN WITHIN DIMENSIONS

SCALE 2 : 1
DESIGN UNITS ☒ mm ☐ INCH
THIRD ANGLE PROJECTION
DIMENSIONS: ☐ mm/INCH ☐ INCH/mm ☒ mm ONLY

DRAWN BY & DATE: JBINGHAM 97/06/19
CHECKED BY & DATE: SREED 97/06/19
APPROVED BY & DATE: CBIXLER 97/06/19

TITLE: SALES ASSEMBLY, HDM DOUBLE-END MIDPLANE, 72 POS. SLIDE-ON HOUSING

molex MOLEX INCORPORATED

CAD FILENAME: S73809X1.DGN
MATERIAL NO.: SEE CHART
DRAWING NO.: SD-73809-001
SHEET NO.: 1 OF 2

THIS DRAWING CONTAINS INFORMATION THAT IS PROPRIETARY TO MOLEX INCORPORATED AND SHOULD NOT BE USED WITHOUT WRITTEN PERMISSION.

SIZE B

MATERIAL NUMBER ASSIGNMENT

73809- * * * *

0 = 72-CIRCUIT

0 = OPEN END VERSION
1 = CLOSED END VERSION
2 = POLAR/GUIDE VERSION

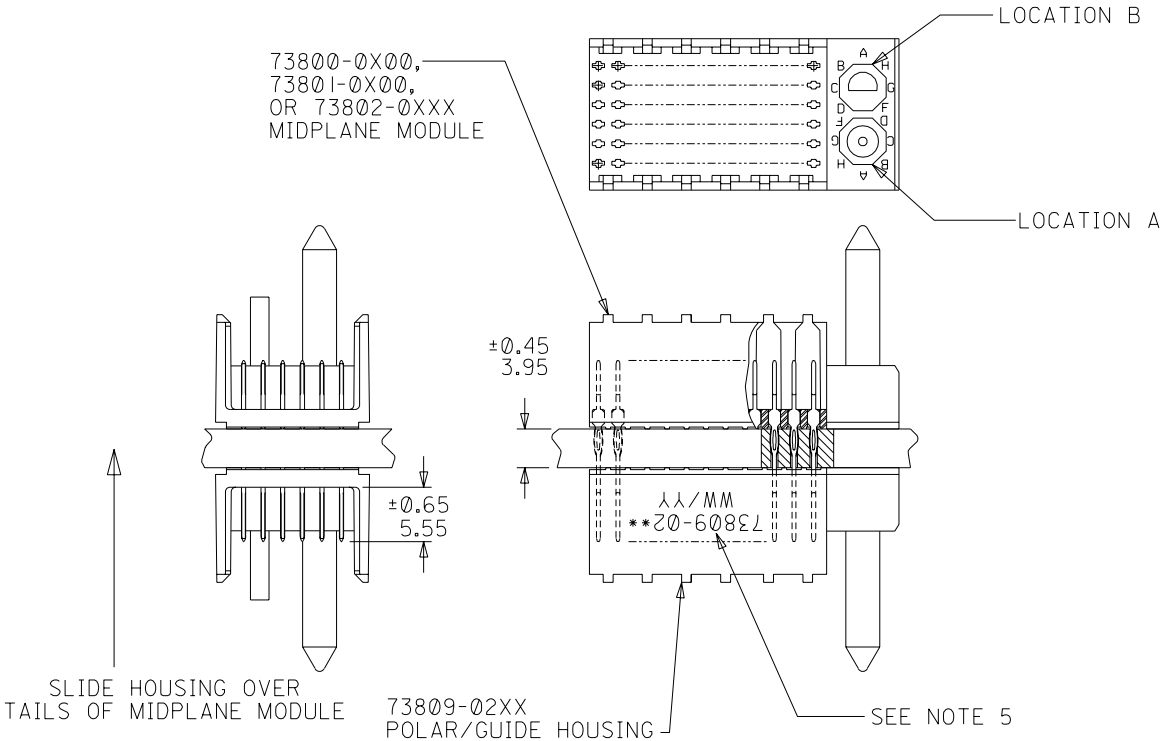

NUMBER	GUIDE POST LOCATION	POLAR KEY POSITION
00	N/A	N/A
01	B	A
02	A	
03	B	B
04	A	
05	B	C
06	A	
07	B	D
08	A	
09	B	E
10	A	
11	B	F
12	A	
13	B	G
14	A	
15	B	H
16	A	
17	B	N/A
18	A	

SEE SHEET 1
EC NO. UDT20000-0443
DRWN: JBINGHAM 99/11/04
CH'K: SREED 99/11/04
APPR: CBIXLER 99/11/04
DESCRIPTION
B
REV

QUALITY SYMBOLS
MAJOR =0
CRITICAL C =0

GENERAL TOLERANCES: (UNLESS SPECIFIED)

	mm	INCH
4 PLACES	±0.	±.
3 PLACES	±0.	±.
2 PLACES	±0.05	±.
1 PLACE	±0.10	±.
ANGULAR: ± 1/2°		

DRAFT WHERE APPLICABLE MUST REMAIN WITHIN DIMENSIONS

SCALE 2 : 1
DESIGN UNITS ☒mm ☐INCH
THIRD ANGLE PROJECTION
DIMENSIONS: ☐ mm/INCH ☐ INCH/mm ☒ mm ONLY
SHT REV
REVISE ON CAD ONLY

DRAWN BY & DATE JBINGHAM 97/06/19
CHECKED BY & DATE SREED 97/06/19
APPROVED BY & DATE CBIXLER 97/06/19

TITLE: SALES ASSEMBLY, HDM
DOUBLE-END MIDPLANE, 72 POS.
SLIDE-ON HOUSING

molex MOLEX INCORPORATED

CAD FILENAME S73809X2.DGN
MATERIAL NO. SEE CHART
DRAWING NO. SD-73809-001
SHEET NO. 2

THIS DRAWING CONTAINS INFORMATION THAT IS PROPRIETARY TO MOLEX INCORPORATED AND SHOULD NOT BE USED WITHOUT WRITTEN PERMISSION.

SIZE B

Общество с ограниченной ответственностью «МосЧип» ИНН 7719860671 / КПП 771901001
Адрес: 105318, г.Москва, ул.Щербаковская д.3, офис 1107

Данный компонент на территории Российской Федерации

Вы можете приобрести в компании MosChip.

Для оперативного оформления запроса Вам необходимо перейти по данной ссылке:

http://moschip.ru/get-element

Вы можете разместить у нас заказ для любого Вашего проекта, будь то серийное производство или разработка единичного прибора.

В нашем ассортименте представлены ведущие мировые производители активных и пассивных электронных компонентов.

Нашей специализацией является поставка электронной компонентной базы двойного назначения, продукции таких производителей как XILINX, Intel (ex.ALTERA), Vicor, Microchip, Texas Instruments, Analog Devices, Mini-Circuits, Amphenol, Glenair.

Сотрудничество с глобальными дистрибьюторами электронных компонентов, предоставляет возможность заказывать и получать с международных складов практически любой перечень компонентов в оптимальные для Вас сроки.

На всех этапах разработки и производства наши партнеры могут получить квалифицированную поддержку опытных инженеров.

Система менеджмента качества компании отвечает требованиям в соответствии с ГОСТ Р ИСО 9001, ГОСТ РВ 0015-002 и ЭС РД 009

Офис по работе с юридическими лицами:

105318, г.Москва, ул.Щербаковская д.3, офис 1107, 1118, ДЦ «Щербаковский»

Телефон: +7 495 668-12-70 (многоканальный)

Факс: +7 495 668-12-70 (доб.304)

E-mail: info@moschip.ru

Skype отдела продаж:
moschip.ru
moschip.ru_4
moschip.ru_6
moschip.ru_9