# DC to 50 MHz, Quad I/Q Demodulator and Phase Shifter

Data Sheet

# AD8339

## FEATURES

**Quad integrated I/Q demodulator**
**16 phase select on each output (22.5° per step)**
**Quadrature demodulation accuracy**
  **Phase accuracy: ±1°**
  **Amplitude imbalance: ±0.05 dB**
**Bandwidth**
  **4LO: LF to 200 MHz**
  **RF: LF to 50 MHz**
  **Baseband: determined by external filtering**
**Output dynamic range: 160 dB/Hz**
**LO drive: >0 dBm (50 Ω), single-ended sine wave**
**Supply: ±5 V**
**Power consumption: 73 mW/channel (290 mW total)**
**Power-down via SPI (each channel and complete chip)**

## APPLICATIONS

**Medical imaging (CW ultrasound beamforming)**
**Phased array systems**
  **Radar**
  **Adaptive antennas**
**Communication receivers**

## FUNCTIONAL BLOCK DIAGRAM

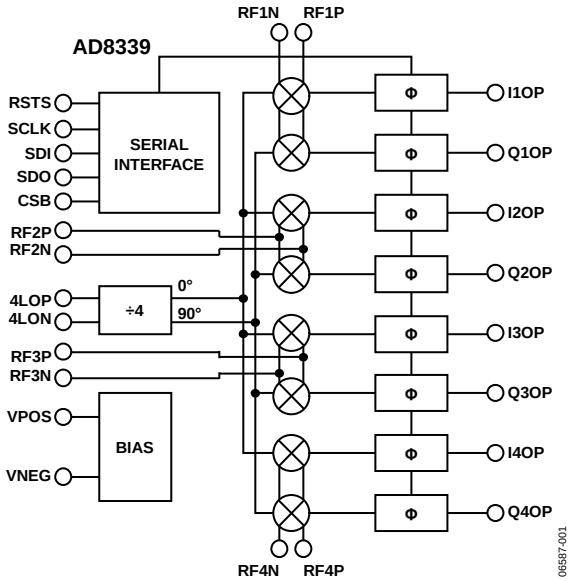


*Figure 1.*

## GENERAL DESCRIPTION

The AD8339[1] is a quad I/Q demodulator configured to be driven by a low noise preamplifier with differential outputs. It is optimized for the LNA in the AD8332/AD8334/AD8335 family of VGAs. The part consists of four identical I/Q demodulators with a 4× local oscillator (LO) input that divides the signal and generates the necessary 0° and 90° phases of the internal LO that drive the mixers. The four I/Q demodulators can be used independently of each other (assuming that a common LO is acceptable) because each has a separate RF input.

Continuous wave (CW) analog beamforming (ABF) and I/Q demodulation are combined in a single 40-lead, ultracompact chip scale device, making the AD8339 particularly applicable in high density ultrasound scanners. In an ABF system, time domain coherency is achieved following the appropriate phase alignment and summation of multiple receiver channels. A reset pin synchronizes multiple ICs to start each LO divider in the same quadrant. Sixteen programmable 22.5° phase increments are available for each channel. For example, if Channel 1 is used as a reference and Channel 2 has an I/Q phase lead of 45°, the user can phase align Channel 2 with Channel 1 by choosing the appropriate phase select code.

The mixer outputs are in current form for convenient summation. The independent I and Q mixer output currents are summed and converted to a voltage by a low noise, high dynamic range, current-to-voltage (I-V) transimpedance amplifier, such as the AD8021 or the AD829. Following the current summation, the combined signal is applied to a high resolution analog-to-digital converter (ADC), such as the AD7665 (16-bit, 570 kSPS).

An SPI-compatible serial interface port is provided to easily program the phase of each channel; the interface allows daisy chaining by shifting the data through each chip from SDI to SDO. The SPI also allows for power-down of each individual channel and the complete chip. During power-down, the serial interface remains active so that the device can be programmed again.

The dynamic range is typically 160 dB/Hz at the I and Q outputs. The AD8339 is available in a 6 mm × 6 mm, 40-lead LFCSP and is specified over the industrial temperature range of −40°C to +85°C.

[1] Protected by U.S. Patent Number 7,760,833.

**Rev. B**
**Information furnished by Analog Devices is believed to be accurate and reliable. However, no responsibility is assumed by Analog Devices for its use, nor for any infringements of patents or other rights of third parties that may result from its use. Specifications subject to change without notice. No license is granted by implication or otherwise under any patent or patent rights of Analog Devices. Trademarks and registered trademarks are the property of their respective owners.**

**One Technology Way, P.O. Box 9106, Norwood, MA 02062-9106, U.S.A.**
**Tel: 781.329.4700** **www.analog.com**
**Fax: 781.461.3113** **©2007–2012 Analog Devices, Inc. All rights reserved.**

# TABLE OF CONTENTS

Features ... 1
Applications ... 1
Functional Block Diagram ... 1
General Description ... 1
Revision History ... 2
Specifications ... 3
Absolute Maximum Ratings ... 5
ESD Caution ... 5
Pin Configuration and Function Descriptions ... 6
Equivalent Input Circuits ... 7
Typical Performance Characteristics ... 8
Test Circuits ... 14
Theory of Operation ... 18
Quadrature Generation ... 19
I/Q Demodulator and Phase Shifter ... 19
Dynamic Range and Noise ... 19
Multichannel Summation ... 20
Serial Interface ... 23
ENBL Bits ... 23
Applications Information ... 24
Logic Inputs and Interfaces ... 24
Reset Input ... 24
LO Input ... 24
Evaluation Board ... 25
Connections to the Board ... 26
Test Configurations ... 26
AD8339-EVALZ Artwork ... 33
Outline Dimensions ... 35
Ordering Guide ... 35

## REVISION HISTORY

**7/12—Rev. A to Rev. B**

Changes to Figure 1 and General Description Section ... 1

**2/09—Rev. 0 to Rev. A**

Change to Figure 1 ... 1
Change to Table 2 ... 5
Added Exposed Pad Notation to Figure 2;
Changes to Table 3 ... 6
Changes to Figure 3; Added Figure 4;
Renumbered Sequentially ... 7
Changes to Theory of Operation Section ... 18
Changes to Dynamic Range and Noise Section, ... 20
Changes to Channel Summing Section ... 21
Added Figure 55 ... 22
Changes to Serial Interface Section, ENBL Bits Section,
Figure 56, and Figure 57 ... 23
Changes to Evaluation Board Section and Figure 58 ... 25
Changes to Connections to the Board Section and Table 5 ... 26
Changes to Figure 60 ... 27
Changes to Figure 61 ... 28
Changes to Table 7 ... 29
Changes to Figure 63 ... 30
Changes to Figure 64 ... 31
Changes to Figure 65 ... 32
Changes to Figure 66 and Figure 67 ... 33
Changes to Figure 68 and Figure 69 ... 34
Deleted Table 8 ... 35
Updated Outline Dimensions ... 35

**8/07—Revision 0: Initial Version**

# SPECIFICATIONS

$V_S$ = ±5 V, $T_A$ = 25°C, $4f_{LO}$ = 20 MHz, $f_{RF}$ = 5.01 MHz, $f_{BB}$ = 10 kHz, $P_{LO}$ ≥ 0 dBm, per channel performance, dBm (50 Ω), unless otherwise noted. Single-channel AD8021 LPF values: $R_{FILT}$ = 787 Ω and $C_{FILT}$ = 2.2 nF (see Figure 53).

**Table 1.**

| Parameter | Test Conditions/Comments | Min | Typ | Max | Unit |
|---|---|---|---|---|---|
| OPERATING CONDITIONS | | | | | |
| Local Oscillator (LO) Frequency Range | 4× internal LO at Pin 4LOP and Pin 4LON, square wave drive via LVDS (see Figure 64) | 0.01 | | 200 | MHz |
| RF Frequency Range | Mixing | DC | | 50 | MHz |
| Baseband Bandwidth | Limited by external filtering | DC | | 50 | MHz |
| LO Input Level | | | 0 | 13 | dBm |
| Supply Voltage ($V_S$) | | ±4.5 | ±5.0 | ±5.5 | V |
| Temperature Range | | −40 | | +85 | °C |
| DEMODULATOR PERFORMANCE | | | | | |
| Input Impedance | RF, differential | | 25‖10 | | kΩ‖pF |
| | LO, differential | | 100‖4 | | kΩ‖pF |
| Transconductance | Demodulated $I_{OUT}/V_{IN}$; each Ix or Qx output after low-pass filtering measured from RF inputs, all phases | | 1.15 | | mS |
| Dynamic Range | IP1dB – input referred noise (dBm) | | 160 | | dB/Hz |
| Maximum Input Swing | Differential; inputs biased at 2.5 V; Pin RFxP, Pin RFxN | | 2.8 | | V p-p |
| Peak Output Current (No Filtering) | 0° phase shift | | ±2.4 | | mA |
| | 45° phase shift | | ±3.1 | | mA |
| Input P1dB | Ref = 50 Ω | | 14.8 | | dBm |
| | Ref = 1 V rms | | 1.85 | | dBV |
| Third-Order Intermodulation (IM3) | $f_{RF1}$ = 5.010 MHz, $f_{RF2}$ = 5.015 MHz, $f_{LO}$ = 5.023 MHz | | | | |
| Equal Input Levels | Baseband tones: 0 dBm @ 8 kHz and 13 kHz | | −60 | | dBc |
| Unequal Input Levels | Baseband tones: −1 dBm @ 8 kHz and −31 dBm @ 13 kHz | | −66 | | dBc |
| Third-Order Input Intercept (IIP3) | $f_{RF1}$ = 5.010 MHz, $f_{RF2}$ = 5.015 MHz, $f_{LO}$ = 5.023 MHz | | 31 | | dBm |
| LO Leakage | Measured at RF inputs, worst phase, measured into 50 Ω | | −118 | | dBm |
| | Measured at baseband outputs, worst phase, AD8021 disabled, measured into 50 Ω | | −68 | | dBm |
| Conversion Gain | All codes, see Figure 42 | | −1.3 | | dB |
| Input Referred Noise | Output noise/conversion gain (see Figure 47) | | 11.8 | | nV/√Hz |
| Output Current Noise | Output noise/$R_{FILT}$ | | 12.9 | | pA/√Hz |
| Noise Figure | With AD8334 LNA | | | | |
| | $R_S$ = 50 Ω, $R_{FB}$ = ∞ | | 8.4 | | dB |
| | $R_S$ = 50 Ω, $R_{FB}$ = 1.1 kΩ | | 9.1 | | dB |
| | $R_S$ = 50 Ω, $R_{FB}$ = 274 Ω | | 11.5 | | dB |
| Bias Current | Pin 4LOP and Pin 4LON | | −3 | | µA |
| | Pin RFxP and Pin RFxN | | −45 | | µA |
| LO Common-Mode Range | Pin 4LOP and Pin 4LON (each pin) | 0.2 | | 3.8 | V |
| RF Common-Mode Voltage | For maximum differential swing; Pin RFxP and Pin RFxN (dc-coupled to AD8334 LNA output) | | 2.5 | | V |
| Output Compliance Range | Pin IxOP and Pin QxOP | −1.5 | | +0.7 | V |
| PHASE ROTATION PERFORMANCE | One channel is reference; others are stepped | | | | |
| Phase Increment | 16 phase steps per channel | | 22.5 | | Degrees |
| Quadrature Phase Error | Ix to Qx; all phases, 1σ | −2 | ±1 | +2 | Degrees |
| I/Q Amplitude Imbalance | Ix to Qx; all phases, 1σ | | ±0.05 | | dB |
| Channel-to-Channel Matching | Phase match I-to-I and Q-to-Q; −40°C < $T_A$ < +85°C | | ±1 | | Degrees |
| | Amplitude match I-to-I and Q-to-Q; −40°C < $T_A$ < +85°C | | ±0.1 | | dB |

| Parameter | Test Conditions/Comments | Min | Typ | Max | Unit |
|---|---|---|---|---|---|
| LOGIC INTERFACES | | | | | |
| Pin SDI, Pin CSB, Pin SCLK, Pin RSET | | | | | |
| Logic Level High | | 1.5 | | | V |
| Logic Level Low | | | | 0.9 | V |
| Pin RSTS | | | | | |
| Logic Level High | | 1.8 | | | V |
| Logic Level Low | | | | 1.2 | V |
| Bias Current | Logic high (pulled to 5 V) | | 0.5 | | µA |
| | Logic low (pulled to GND) | | 0 | | µA |
| Input Resistance | | | 4 | | MΩ |
| LO Divider RSET Setup Time | RSET rising or falling edge to 4LOP or 4LON (differential) rising edge | 5 | | | ns |
| LO Divider RSET High Pulse Width | | 20 | | | ns |
| LO Divider RSET Response Time | | | 200 | | ns |
| Phase Response Time | Measured from CSB going high | | 5 | | µs |
| Enable Response Time | Measured from CSB going high (with 0.1 µF capacitor on Pin LODC); no channel enabled | | 12 | 15 | µs |
| | At least one channel enabled | | 500 | | ns |
| Output | Pin SDO loaded with 5 pF and next SDI input | | | | |
| Logic Level High | | 1.7 | 1.9 | | V |
| Logic Level Low | | | 0.2 | 0.5 | V |
| SPI TIMING CHARACTERISTICS | Pin SDI, Pin SDO, Pin CSB, Pin SCLK, Pin RSTS | | | | |
| SCLK Frequency | $f_{CLK}$ | | | 10 | MHz |
| CSB Fall to SCLK Setup Time | $t_1$ | 0 | | | ns |
| SCLK High Pulse Width | $t_2$ | 10 | | | ns |
| SCLK Low Pulse Width | $t_3$ | 10 | | | ns |
| Data Access Time (SDO) After SCLK Rising Edge | $t_4$ | | | 100 | ns |
| Data Setup Time Before SCLK Rising Edge | $t_5$ | 2 | | | ns |
| Data Hold Time After SCLK Rising Edge | $t_6$ | 2 | | | ns |
| SCLK Rise to CSB Rise Hold Time | $t_7$ | 15 | | | ns |
| CSB Rise to SCLK Rise Hold Time | $t_8$ | 0 | | | ns |
| POWER SUPPLY | Pin VPOS, Pin VNEG | | | | |
| Supply Voltage | | ±4.5 | ±5.0 | ±5.5 | V |
| Current | VPOS, all phase bits = 0 | | 35 | | mA |
| | VNEG, all phase bits = 0 | | −18 | | mA |
| Over Temperature, −40°C < $T_A$ < +85°C | VPOS, all phase bits = 0 | 33 | | 36 | mA |
| | VNEG, all phase bits = 0 | −19 | | −17 | mA |
| Quiescent Power | Per channel, all phase bits = 0 | | 66 | | mW |
| | Per channel maximum (depends on phase bits) | | 88 | | mW |
| Disable Current | All channels disabled; SPI stays on | | 2.75 | | mA |
| PSRR | VPOS to Ix/Qx outputs, @ 10 kHz | | −85 | | dB |
| | VNEG to Ix/Qx outputs, @ 10 kHz | | −85 | | dB |

# ABSOLUTE MAXIMUM RATINGS

**Table 2.**

| Parameter | Rating |
|---|---|
| Voltages | |
| Supply Voltage ($V_S$) | ±6 V |
| RF Inputs | 6 V to GND |
| 4LO Inputs | 6 V to GND |
| Outputs (IxOP, QxOP) | +0.7 V to −6 V |
| Digital Inputs | +6 V to −1.4 V |
| SDO Output | 6 V to GND |
| LODC Pin | VPOS − 1.5 V to +6 V |
| Thermal Data (4-Layer JEDEC Board, No Airflow, Exposed Pad Soldered to PCB) | |
| $\theta_{JA}$ | 32.2°C/W |
| $\theta_{JB}$ | 17.8°C/W |
| $\theta_{JC}$ | 2.7°C/W |
| $\psi_{JT}$ | 0.3°C/W |
| $\psi_{JB}$ | 16.7°C/W |
| Maximum Junction Temperature | 150°C |
| Maximum Power Dissipation (Exposed Pad Soldered to PCB) | 2 W |
| Operating Temperature Range | −40°C to +85°C |
| Storage Temperature Range | −65°C to +150°C |
| Lead Temperature (Soldering, 60 sec) | 300°C |

Stresses above those listed under Absolute Maximum Ratings may cause permanent damage to the device. This is a stress rating only; functional operation of the device at these or any other conditions above those indicated in the operational section of this specification is not implied. Exposure to absolute maximum rating conditions for extended periods may affect device reliability.

## ESD CAUTION

**ESD (electrostatic discharge) sensitive device.** Charged devices and circuit boards can discharge without detection. Although this product features patented or proprietary protection circuitry, damage may occur on devices subjected to high energy ESD. Therefore, proper ESD precautions should be taken to avoid performance degradation or loss of functionality.

# PIN CONFIGURATION AND FUNCTION DESCRIPTIONS

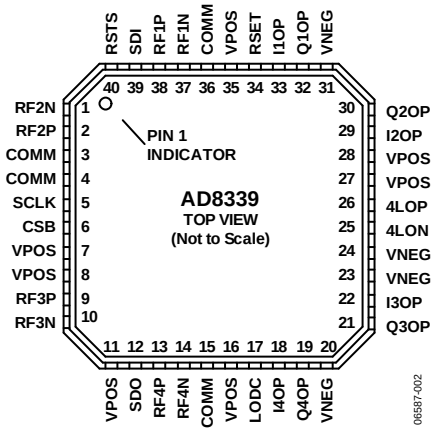


NOTES
1. THE EXPOSED PAD IS NOT CONNECTED INTERNALLY. FOR INCREASED RELIABILITY OF THE SOLDER JOINTS AND MAXIMUM THERMAL CAPABILITY, IT IS RECOMMENDED THAT THE PAD BE SOLDERED TO THE GROUND PLANE.

*Figure 2. Pin Configuration*

**Table 3. Pin Function Descriptions**

| Pin No. | Mnemonic | Description |
|---|---|---|
| 1, 2, 9, 10, 13, 14, 37, 38 | RF1P to RF4P, RF1N to RF4N | RF Inputs. Require external 2.5 V bias for optimum symmetrical input differential swing if ±5 V supplies are used. |
| 3, 4, 15, 36 | COMM | Ground. |
| 5 | SCLK | Serial Interface Clock. |
| 6 | CSB | Serial Interface Chip Select Bar. Active low. |
| 7, 8, 11, 16, 27, 28, 35 | VPOS | Positive Supply. These pins should be decoupled with a ferrite bead in series with the supply and a 0.1 µF capacitor between the VPOS pins and ground. Because the VPOS pins are internally connected, one set of supply decoupling components on each side of the chip should be sufficient. |
| 12 | SDO | Serial Interface Data Output. Normally connected to the SDI pin of the next chip or left open. |
| 17 | LODC | Decoupling Pin for LO. A 0.1 µF capacitor should be connected between this pin and ground. The value of this capacitor affects the chip enable/disable times. |
| 18, 19, 21, 22, 29, 30, 32, 33 | I1OP to I4OP, Q1OP to Q4OP | I/Q Outputs. These outputs provide a bidirectional current that can be converted back to a voltage via a transimpedance amplifier. Multiple outputs can be summed by simply connecting them (wire-OR). The bias voltage should be set to 0 V or less by the transimpedance amplifier (see Figure 53). |
| 20, 23, 24, 31 | VNEG | Negative Supply. These pins should be decoupled with a ferrite bead in series with the supply and a 0.1 µF capacitor between the VNEG pins and ground. Because the VNEG pins are internally connected, one set of supply decoupling components for the chip should be sufficient. |
| 25, 26 | 4LON, 4LOP | LO Inputs. No internal bias; optimally biased by an LVDS driver. For best performance, these inputs should be driven differentially. If driven by a single-ended sine wave at 4LOP or 4LON, the signal level should be >0 dBm (50 Ω) with external bias resistors. |
| 34 | RSET | Reset for LO Interface. Logic threshold is at ~1.3 V and therefore can be driven by >1.8 V CMOS logic. |
| 39 | SDI | Serial Interface Data Input. Logic threshold is at ~1.3 V and therefore can be driven by >1.8 V CMOS logic. |
| 40 | RSTS | Reset for SPI Interface. Logic threshold is at ~1.5 V with ±0.3 V hysteresis and should be driven by >3.3 V CMOS logic. For quick testing without the need to program the SPI, the voltage on the RSTS pin should be pulled to −1.4 V; this enables all four channels in the phase (I = 1, Q = 0) state. |
| EP | | Exposed Pad. The exposed pad is not connected internally. For increased reliability of the solder joints and maximum thermal capability, it is recommended that the pad be soldered to the ground plane. |

# EQUIVALENT INPUT CIRCUITS

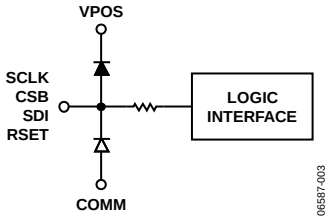


*Figure 3. SCLK, CSB, SDI, and RSET Logic Inputs*

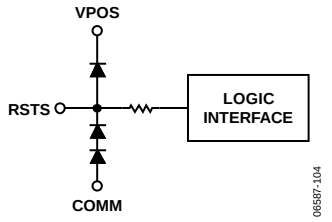


*Figure 4. RSTS Logic Input*

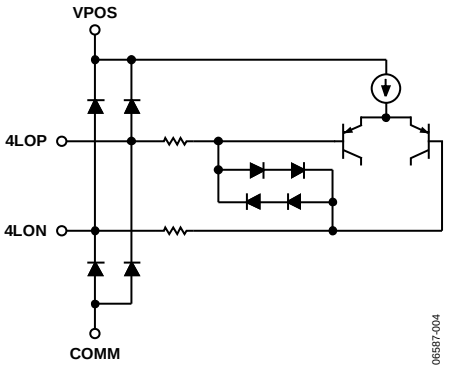


*Figure 5. Local Oscillator Inputs*

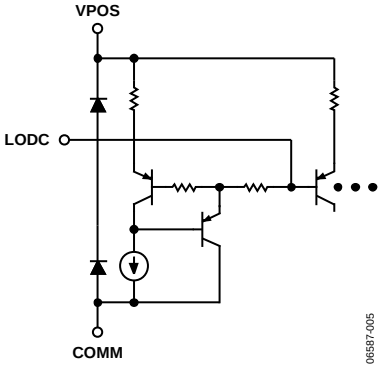


*Figure 6. LO Decoupling Pin*

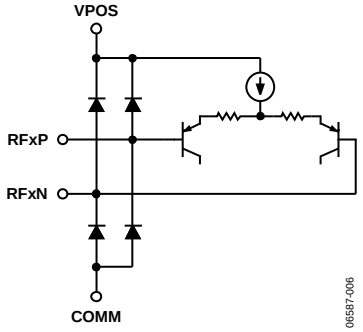


*Figure 7. RF Inputs*

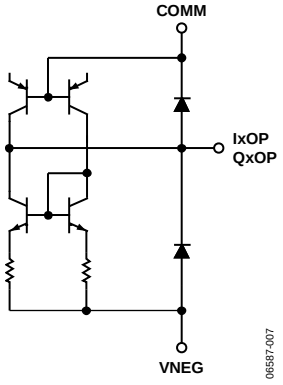


*Figure 8. Output Drivers*

# TYPICAL PERFORMANCE CHARACTERISTICS

$V_S$ = ±5 V, $T_A$ = 25°C, $4f_{LO}$ = 20 MHz, $f_{LO}$ = 5 MHz, $f_{RF}$ = 5.01 MHz, $f_{BB}$ = 10 kHz, $4f_{LO}$ – LVDS drive; per channel performance shown is typical of all channels, differential voltages, dBm (50 Ω), phase select code = 0000, unless otherwise noted (see Figure 42).

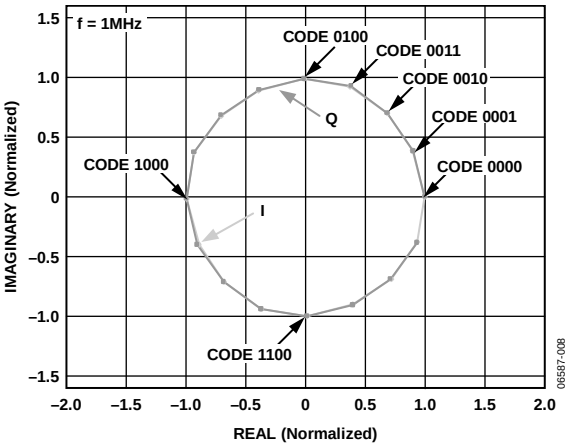


*Figure 9. Normalized Vector Plot of Phase, Ch 2, Ch 3, and Ch 4 vs. Ch 1; Ch 1 Fixed at 0°; Ch 2, Ch 3, and Ch 4 Stepped 22.5°/Step; All Codes Displayed*

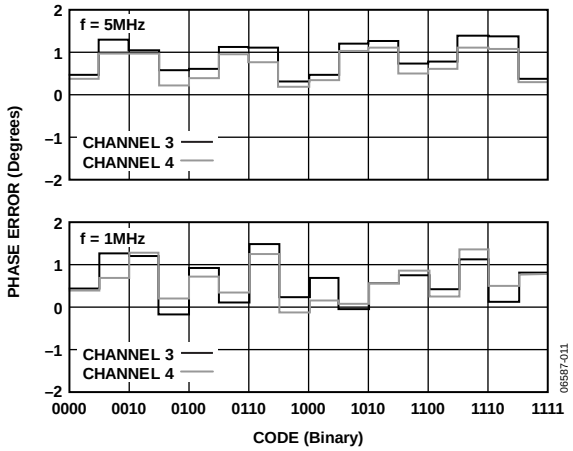


*Figure 12. Representative Phase Error vs. Binary Phase Select Code at 1 MHz and 5 MHz; Ch 3 and Ch 4 Are Displayed with Respect to Ch 1*

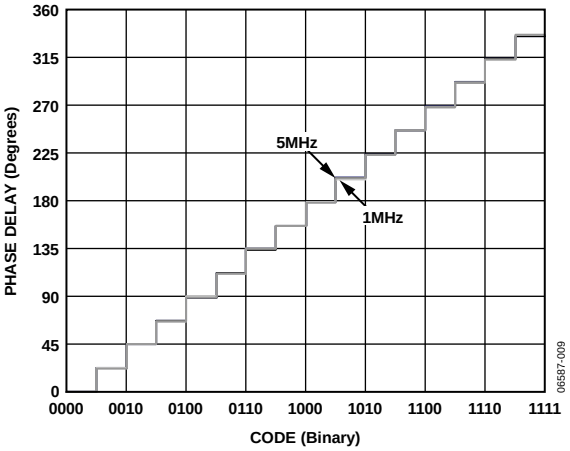


*Figure 10. Representative Phase Delay vs. Binary Phase Select Code at 1 MHz and 5 MHz; Ch 3 and Ch 4 Are Displayed with Respect to Ch 1*

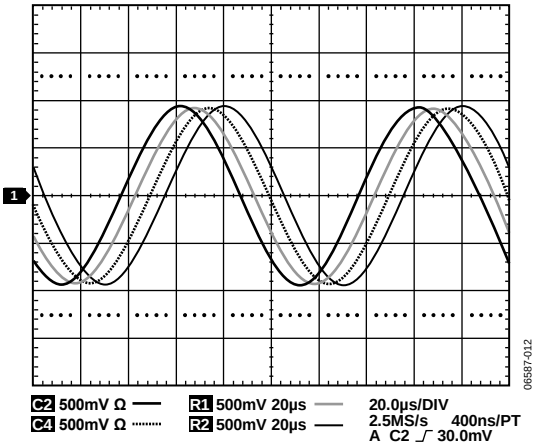


*Figure 13. Representative Phase Delays of the I or Q Outputs; Ch 2 Is Displayed with Respect to Ch 1, for Delays of 22.5°, 45°, 67.5°, and 90°*

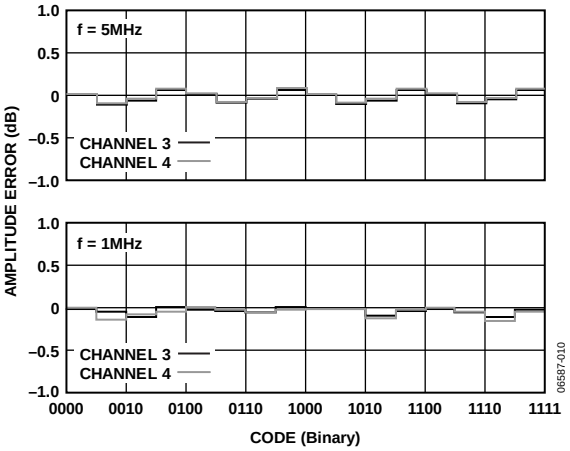


*Figure 11. Representative Amplitude Error vs. Binary Phase Select Code at 1 MHz and 5 MHz; Ch 3 and Ch 4 Are Displayed with Respect to Ch 1*

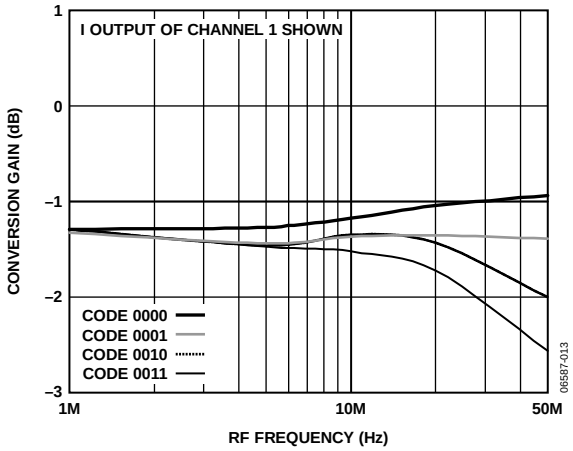


*Figure 14. Conversion Gain vs. RF Frequency, First Quadrant, Baseband Frequency = 10 kHz*

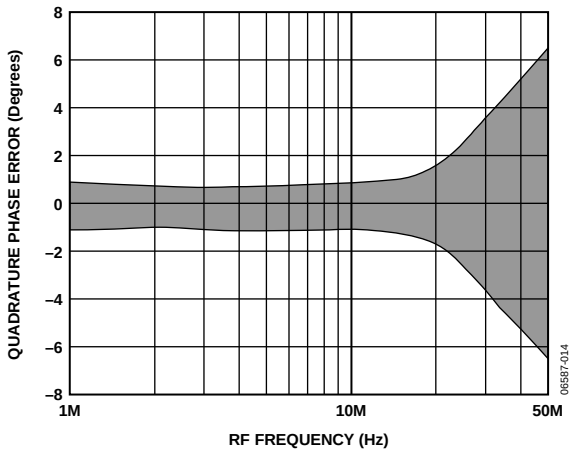


*Figure 15. Representative Range of Quadrature Phase Error vs. RF Frequency for All Channels and Codes*

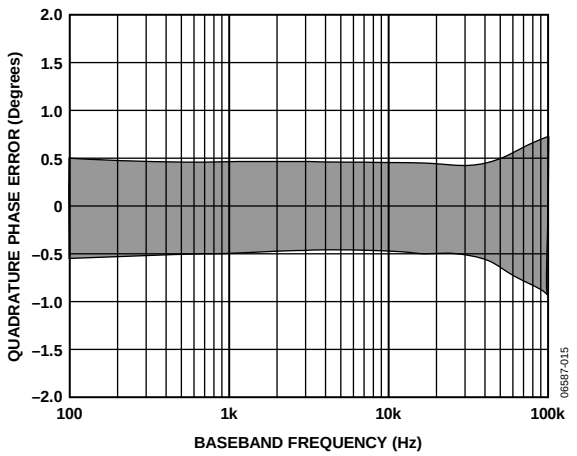


*Figure 16. Representative Range of Quadrature Phase Error vs. Baseband Frequency for All Channels and Codes (See Figure 44)*

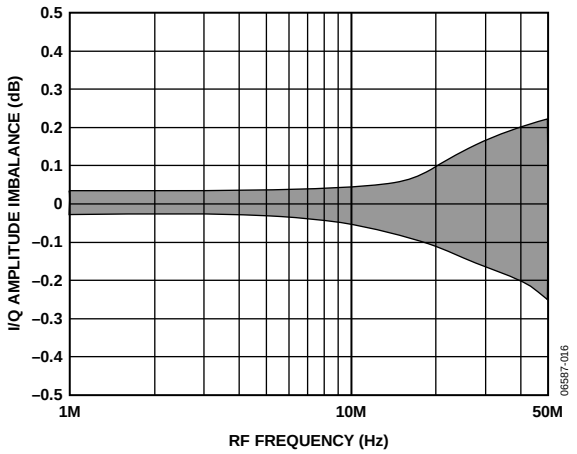


*Figure 17. Representative Range of I/Q Amplitude Imbalance vs. RF Frequency for All Channels and Codes*

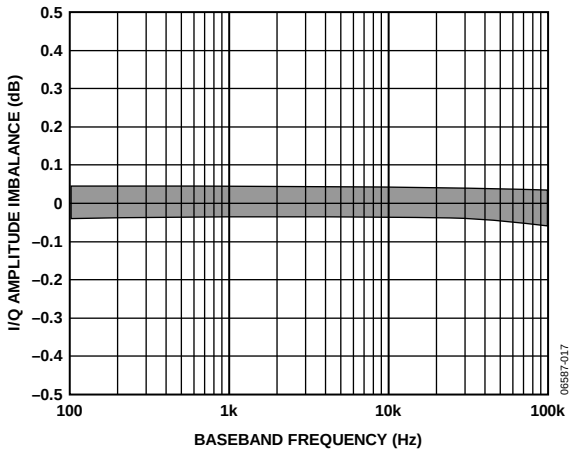


*Figure 18. Representative Range of I/Q Amplitude Imbalance vs. Baseband Frequency for All Channels and Codes (See Figure 44)*

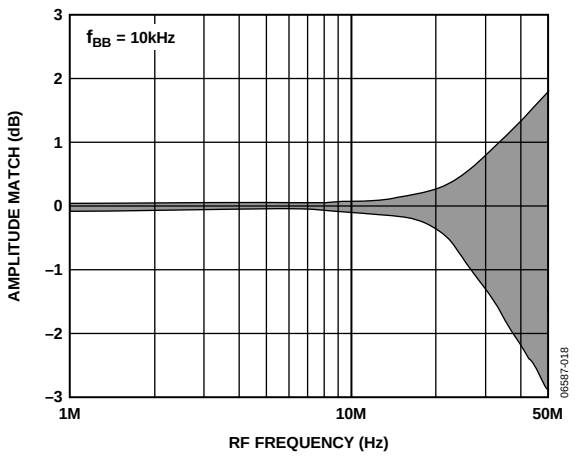


*Figure 19. Typical Channel-to-Channel Amplitude Match vs. RF Frequency, First Quadrant, over the Range of Operating Temperatures*

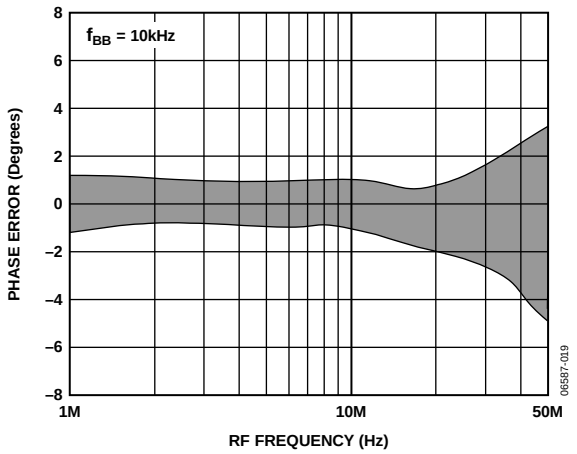


*Figure 20. Typical Channel-to-Channel Phase Error vs. RF Frequency, First Quadrant, over the Range of Operating Temperatures*

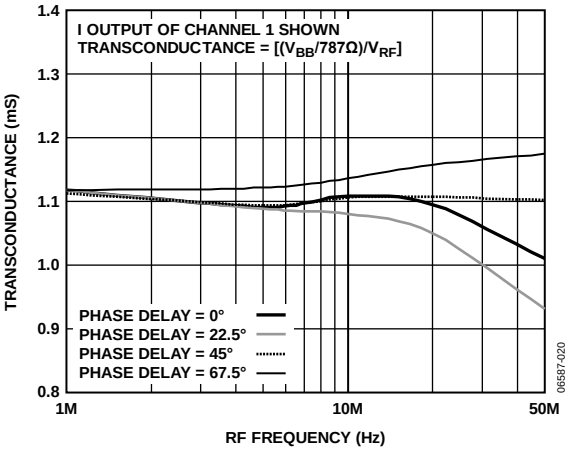


*Figure 21. Transconductance vs. RF Frequency for First Quadrant Phase Delays*

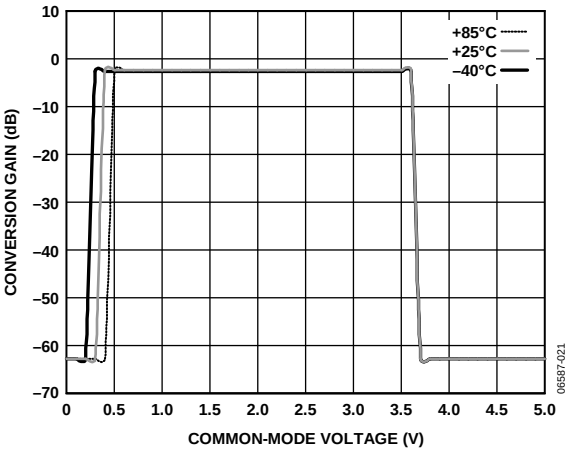


*Figure 22. LO Common-Mode Range at Three Temperatures*

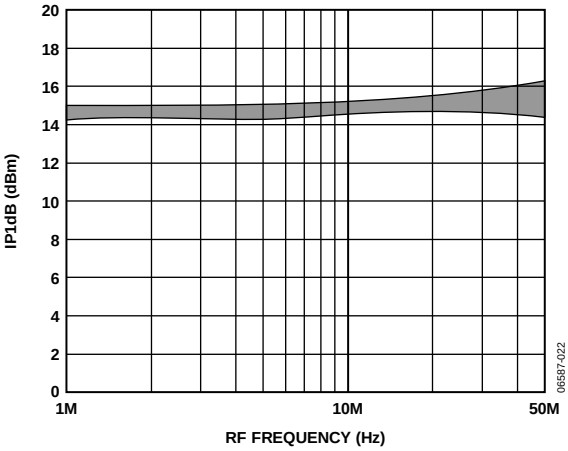


*Figure 23. Representative Range of IP1dB vs. RF Frequency, Baseband Frequency = 10 kHz, First Quadrant (See Figure 43)*

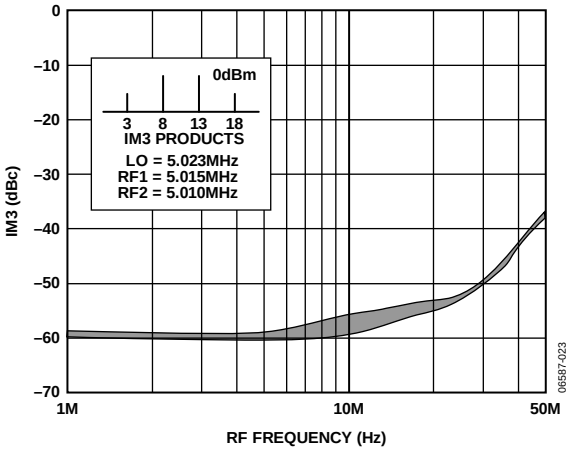


*Figure 24. Representative Range of IM3 vs. RF Frequency, First Quadrant (See Figure 49)*

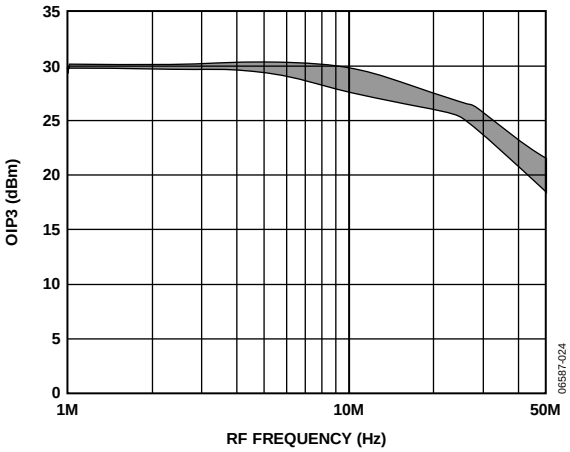


*Figure 25. Representative Range of OIP3 vs. RF Frequency, First Quadrant (See Figure 49)*

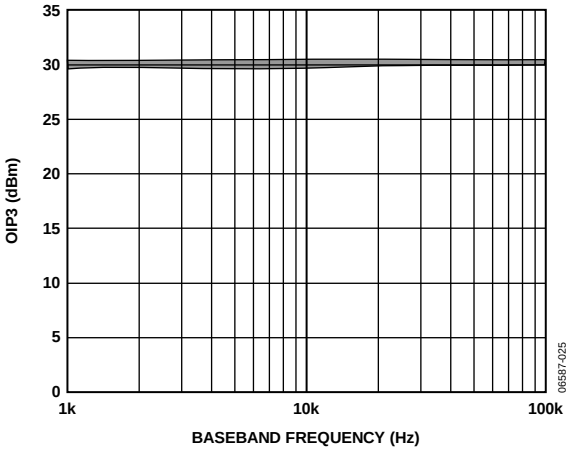


*Figure 26. Representative Range of OIP3 vs. Baseband Frequency (See Figure 48)*

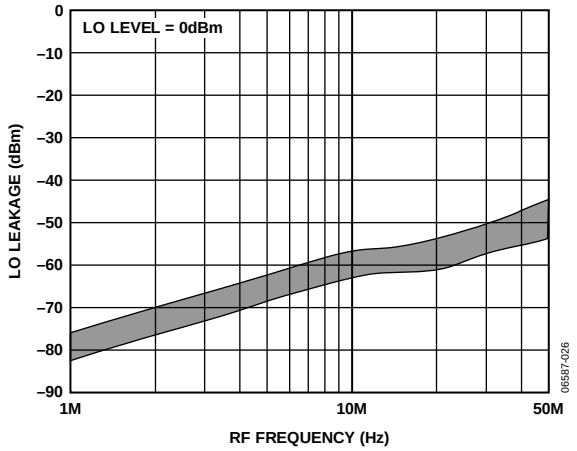


*Figure 27. Representative Range of LO Leakage vs. RF Frequency at I and Q Outputs*

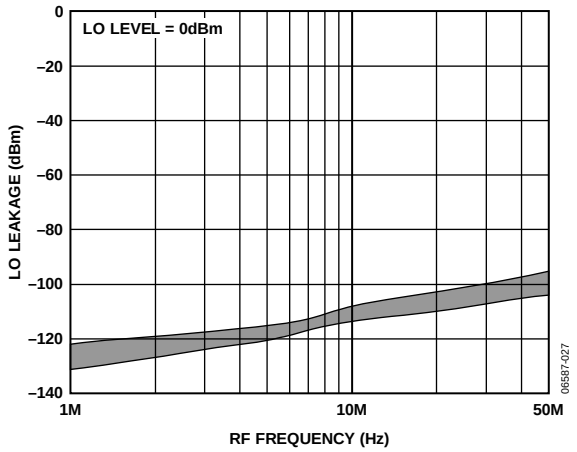


*Figure 28. Representative Range of LO Leakage vs. RF Frequency at RF Inputs*

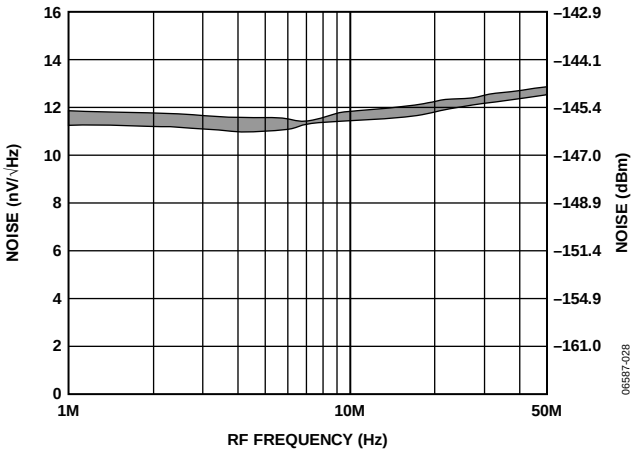


*Figure 29. Representative Range of Input Referred Noise vs. RF Frequency*

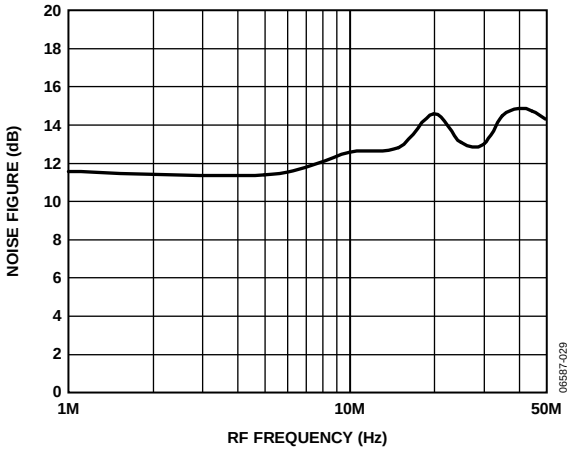


*Figure 30. Noise Figure vs. RF Frequency (When Driven by AD8334 LNA)*

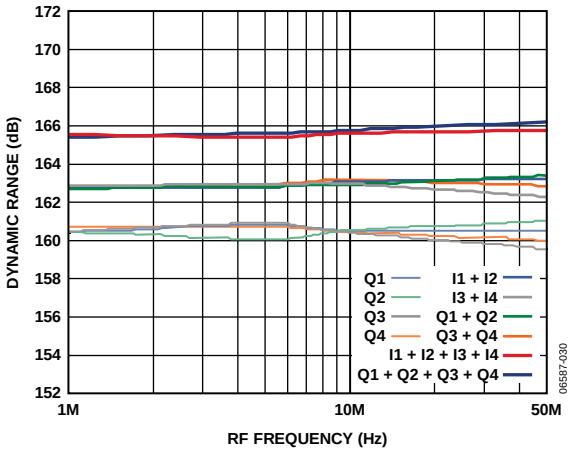


*Figure 31. Dynamic Range vs. RF Frequency, IP1dB Minus Noise Level*

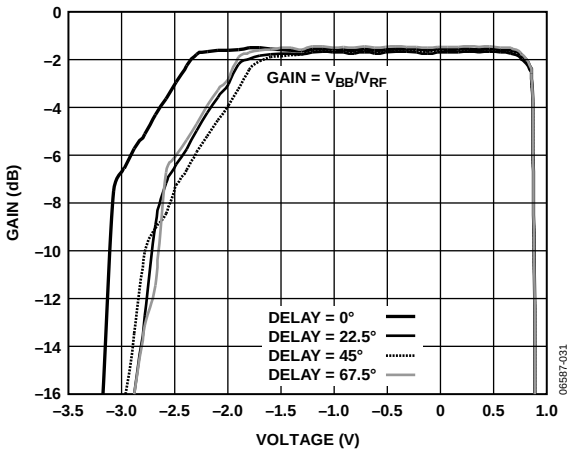


*Figure 32. Output Compliance Range for Four Values of Phase Delay (See Figure 50)*

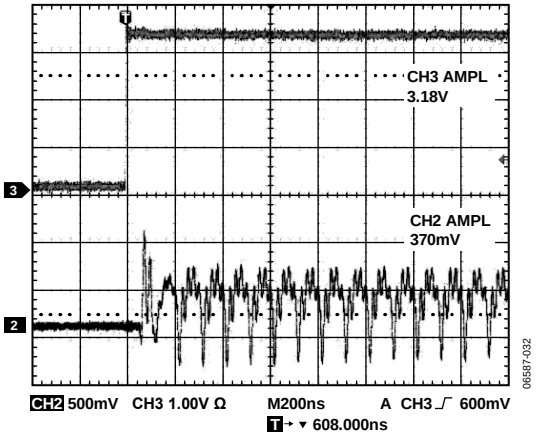


Figure 33. Enable Response vs. CSB (Filter Disabled to Show Response) with a Previously Enabled Channel (See Figure 44)

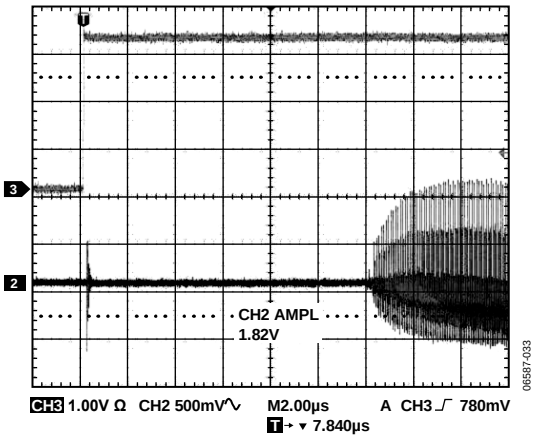


Figure 34. Enable Response vs. CSB (Filter Disabled to Show Response) with No Channels Previously Enabled (See Figure 44)

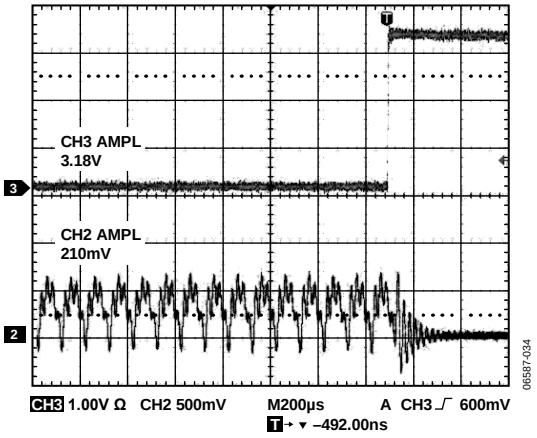


Figure 35. Disable Response vs. CSB (Top: CSB) (See Figure 44)

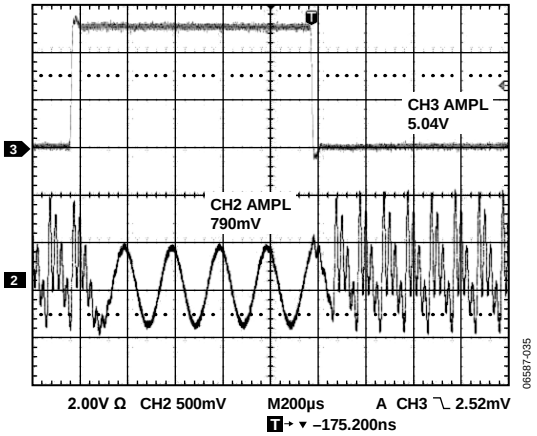


Figure 36. LO Reset Response (see Figure 45)

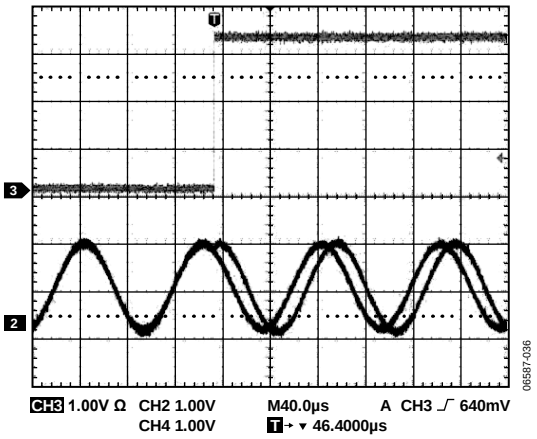


Figure 37. Phase Switching Response at 45° (Top: CSB)

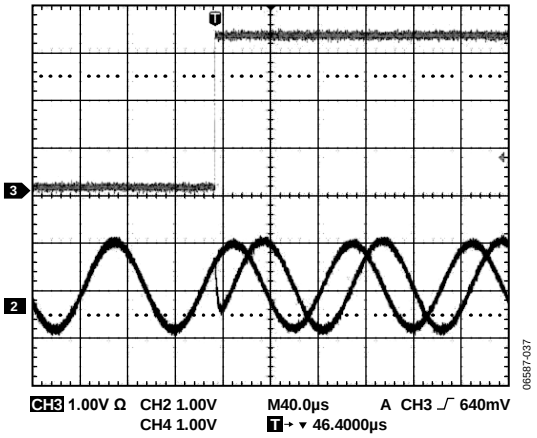


Figure 38. Phase Switching Response at 90° (Top: CSB)

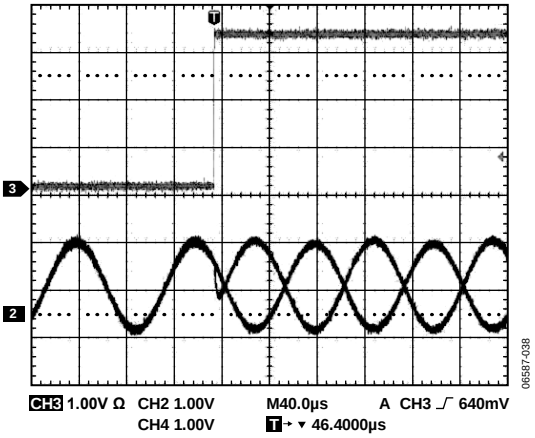


Figure 39. Phase Switching Response at 180° (Top: CSB)

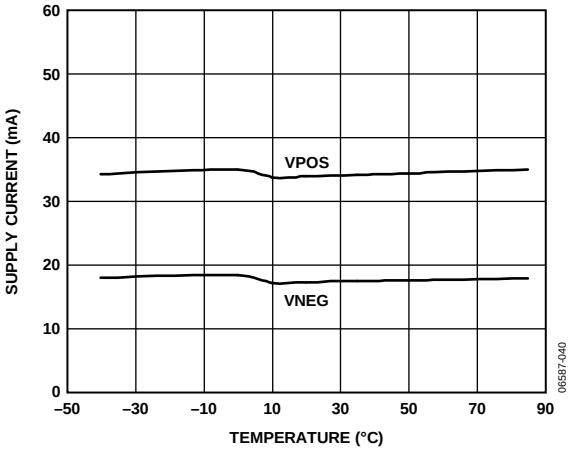


Figure 41. Supply Current vs. Temperature

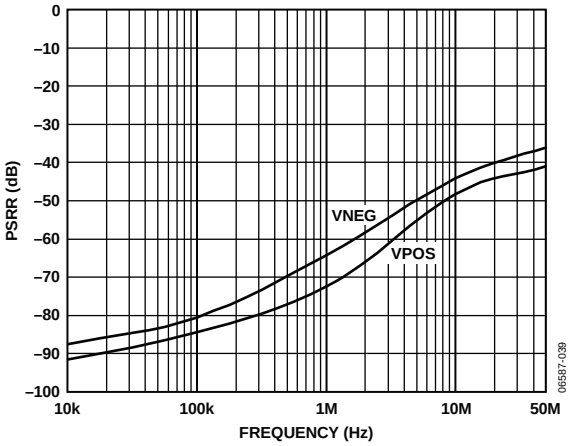


Figure 40. PSRR vs. Frequency (see Figure 51)

# TEST CIRCUITS

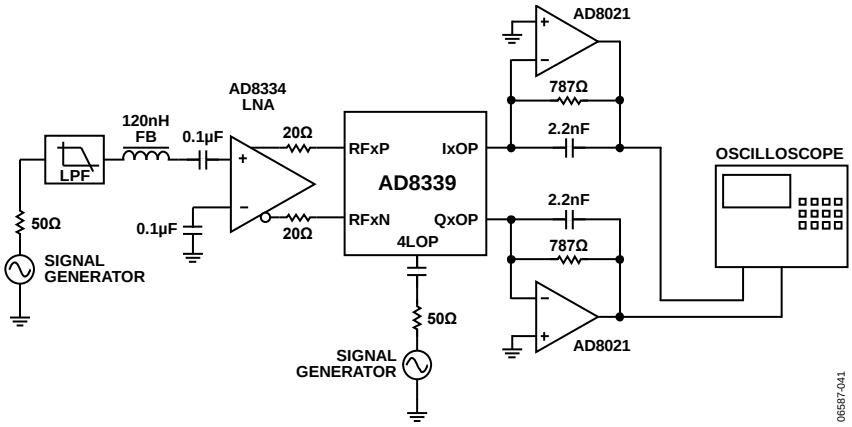


*Figure 42. Default Test Circuit*

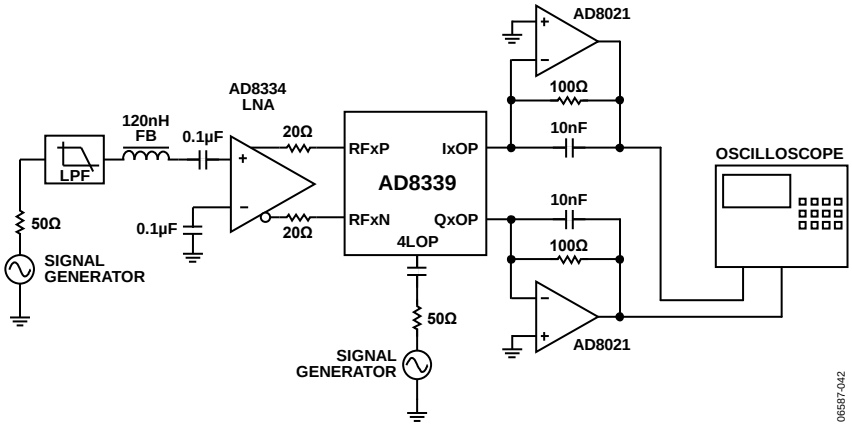


*Figure 43. P1dB Test Circuit*

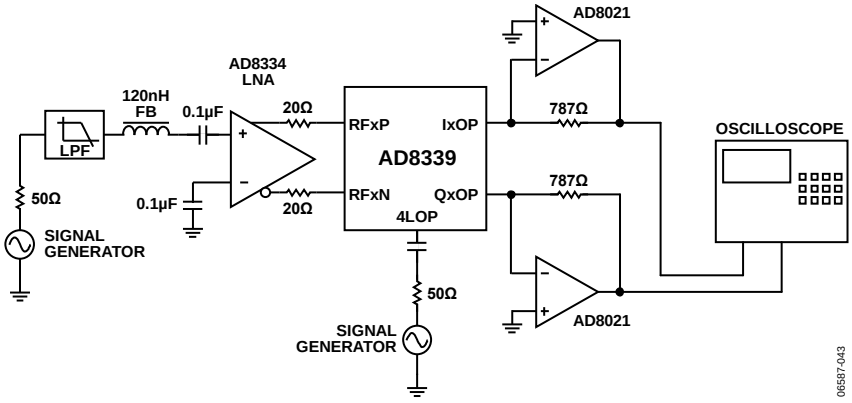


*Figure 44. Phase and Amplitude vs. Baseband Frequency*

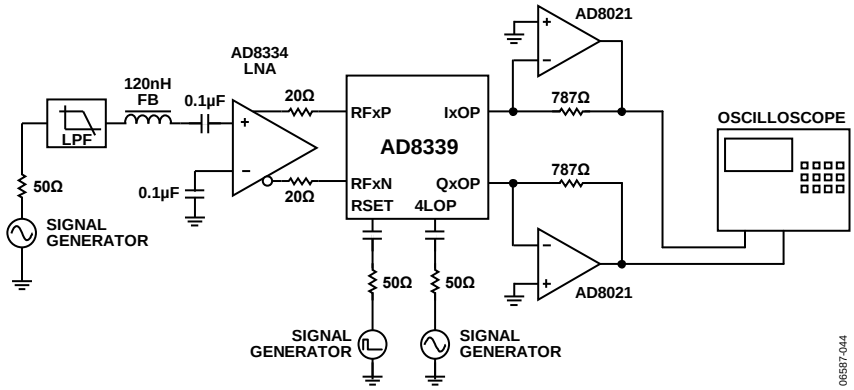


*Figure 45. LO Reset Response*

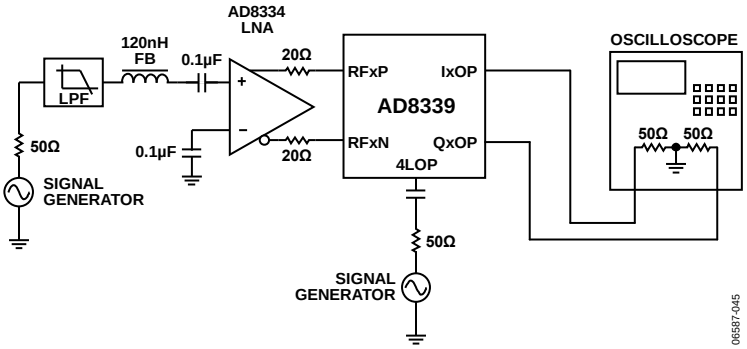


*Figure 46. RF Input Range*

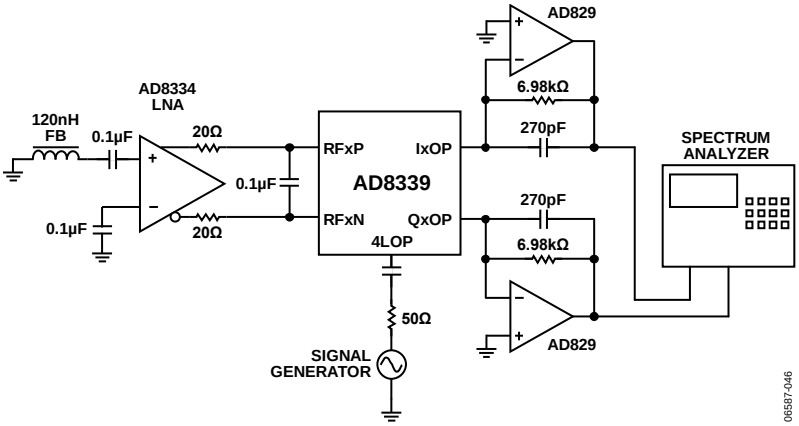


*Figure 47. Noise*

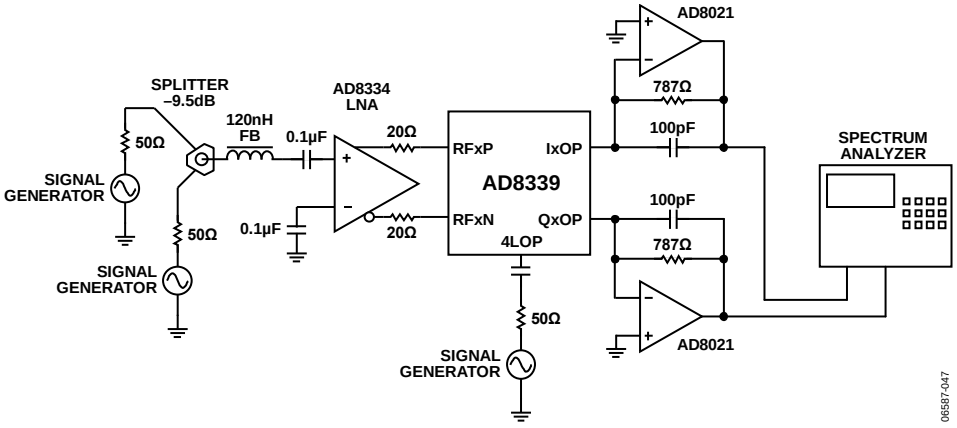


*Figure 48. OIP3 vs. Baseband Frequency*

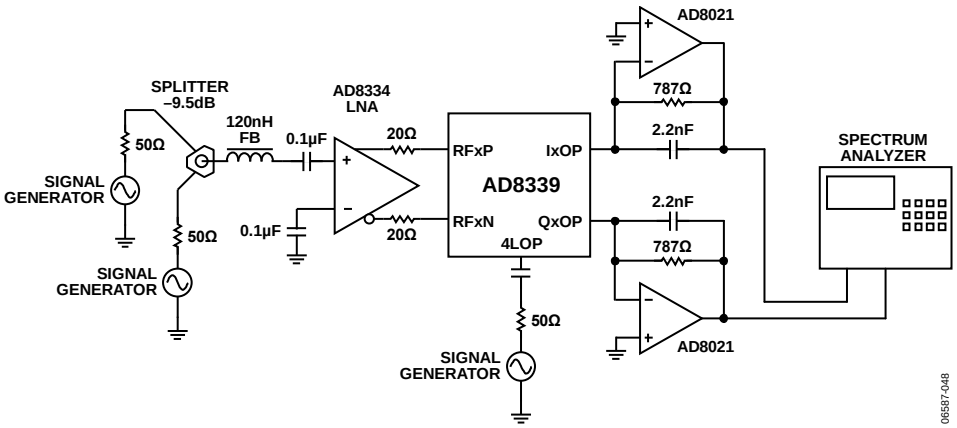


*Figure 49. OIP3 and IM3 vs. RF Frequency*

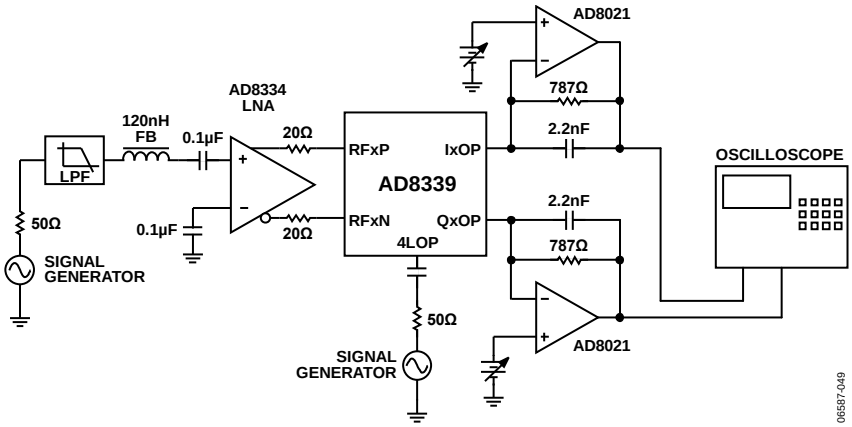


*Figure 50. Output Compliance Range*

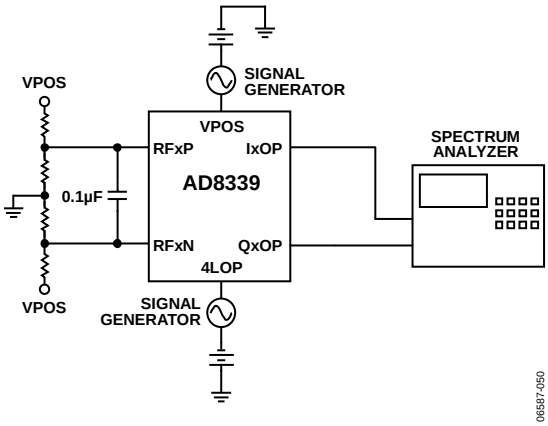


*Figure 51. PSRR*

# THEORY OF OPERATION

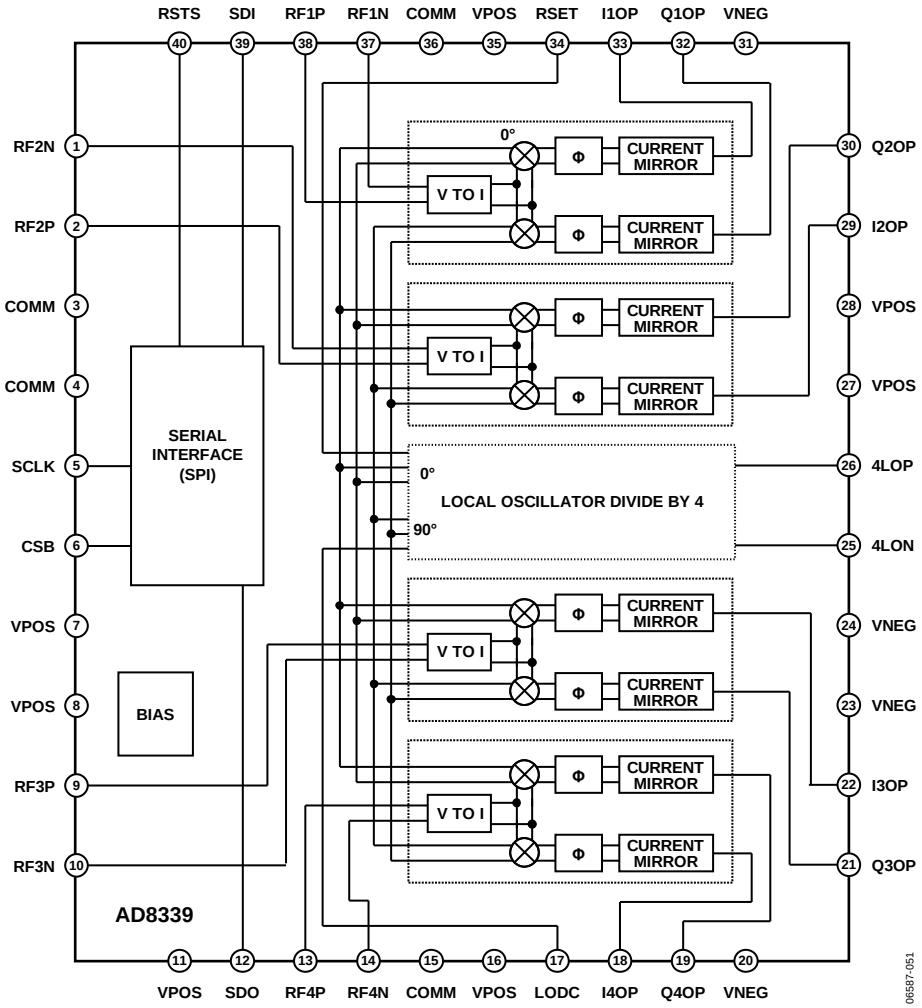


*Figure 52. AD8339 Block Diagram*

The AD8339 is a quad I/Q demodulator with a programmable phase shifter for each channel. The primary application is phased array beamforming in medical ultrasound. Other potential applications include phased array radar and smart antennas for mobile communications. The AD8339 can also be used in applications that require multiple well-matched I/Q demodulators. The AD8339 is architecturally very similar to its predecessor, the AD8333. The major differences are

- The addition of a serial (SPI) interface that allows daisy chaining of multiple devices
- Reduced power per channel

Figure 52 shows the block diagram and pinout of the AD8339. The analog inputs include the four RF inputs, which accept signals from the RF sources, and a local oscillator (applied to differential input pins marked 4LOP and 4LON) common to all channels.

Each channel can be shifted up to 347.5° in 16 increments, or 22.5° per increment, via the SPI port. The AD8339 has two reset inputs: RSET synchronizes the LO dividers when multiple AD8339s are used in arrays; RSTS sets all the SPI port control bits to 0. RSTS is used for testing or to disable the AD8339 without the need to program it via the SPI port.

The I and Q outputs are current-formatted and summed together for beamforming applications. A transimpedance amplifier using an AD8021 op amp is a nearly ideal method for summing multiple channels and current-to-voltage conversion because each of the AD8339 outputs is terminated by a virtual ground. A further advantage of the transimpedance amplifier is the simple implementation of high-pass filtering and the flexible number of channels accommodated.

## QUADRATURE GENERATION

The internal 0° and 90° LO phases are digitally generated by a divide-by-4 logic circuit. The divider is dc-coupled and inherently broadband; the maximum LO frequency is limited only by its switching speed. The duty cycle of the quadrature LO signals is intrinsically 50% and is unaffected by the asymmetry of the externally connected 4LO input. Furthermore, the divider is implemented such that the 4LO signal reclocks the final flip-flops that generate the internal LO signals and thereby minimizes noise introduced by the divide circuitry.

For optimum performance, the 4LO input is driven differentially, but it can also be driven single-ended. A good choice for a drive is an LVDS device as is done on the AD8339 evaluation board. The common-mode range on each pin is approximately 0.2 V to 3.8 V with the nominal ±5 V supplies.

The minimum 4LO level is frequency dependent when driven by a sine wave. For optimum noise performance, it is important to ensure that the LO source has very low phase noise (jitter) and adequate input level to ensure stable mixer core switching. The gain through the divider determines the LO signal level vs. RF frequency. The AD8339 can be operated at very low frequencies at the LO inputs if a square wave is used to drive the LO, as is done with the LVDS driver on the evaluation board.

Beamforming applications require a precise channel-to-channel phase relationship for coherence among multiple channels. A reset pin is provided to synchronize the LO divider circuits in different AD8339s when they are used in arrays. The RSET pin resets the dividers to a known state after power is applied to multiple AD8339s. A logic input must be provided to the RSET pin when using more than one AD8339. Note that at least one channel must be enabled for the LO interface to also be enabled and the LO reset to work. See the Reset Input section for more information.

## I/Q DEMODULATOR AND PHASE SHIFTER

The I/Q demodulators consist of double-balanced Gilbert cell mixers. The RF input signals are converted into currents by transconductance stages that have a maximum differential input signal capability of 2.8 V p-p. These currents are then presented to the mixers, which convert them to baseband (RF – LO) and twice RF (RF + LO). The signals are phase shifted according to the codes programmed into the SPI latch (see Table 4); the phase bits are labeled PHx0 through PHx3, where 0 indicates LSB and 3 indicates MSB. The phase shift function is an integral part of the overall circuit. The phase shift listed in Column 1 of Table 4 is defined as being between the baseband I or Q channel outputs. As an example, for a common signal applied to a pair of RF inputs to an AD8339, the baseband outputs are in phase for matching phase codes. However, if the phase code for Channel 1 is 0000 and that of Channel 2 is 0001, then Channel 2 leads Channel 1 by 22.5°.

Following the phase shift circuitry, the differential current signal is converted from differential to single-ended via a current mirror. An external transimpedance amplifier is needed to convert the I and Q outputs to voltages.

**Table 4. Phase Select Code for Channel-to-Channel Phase Shift**

| Φ Shift | PHx3 (MSB) | PHx2 | PHx1 | PHx0 (LSB) |
|---|---|---|---|---|
| 0° | 0 | 0 | 0 | 0 |
| 22.5° | 0 | 0 | 0 | 1 |
| 45° | 0 | 0 | 1 | 0 |
| 67.5° | 0 | 0 | 1 | 1 |
| 90° | 0 | 1 | 0 | 0 |
| 112.5° | 0 | 1 | 0 | 1 |
| 135° | 0 | 1 | 1 | 0 |
| 157.5° | 0 | 1 | 1 | 1 |
| 180° | 1 | 0 | 0 | 0 |
| 202.5° | 1 | 0 | 0 | 1 |
| 225° | 1 | 0 | 1 | 0 |
| 247.5° | 1 | 0 | 1 | 1 |
| 270° | 1 | 1 | 0 | 0 |
| 292.5° | 1 | 1 | 0 | 1 |
| 315° | 1 | 1 | 1 | 0 |
| 337.5° | 1 | 1 | 1 | 1 |

## DYNAMIC RANGE AND NOISE

Figure 53 is an interconnection block diagram of all four channels of the AD8339. More channels are easily added to the summation (up to 16 when using an AD8021 as the summation amplifier) by wire-OR connecting the outputs as shown for four channels. For optimum system noise performance, the RF input signal is provided by a very low noise amplifier, such as the LNA of the AD8332, AD8334, or AD8335. In beamforming applications, the I and Q outputs of a number of receiver channels are summed (for example, the four channels illustrated in Figure 53). The dynamic range of the system increases by the factor 10 $\log_{10}(N)$, where N is the number of channels (assuming random uncorrelated noise). The noise in the 4-channel example of Figure 53 is increased by 6 dB while the signal quadruples (12 dB), yielding an aggregate SNR improvement of 6 dB (12 – 6).

Judicious selection of the RF amplifier ensures the least degradation in dynamic range. The input referred spectral voltage noise density ($e_n$) of the AD8339 is nominally ~11 nV/√Hz. For the noise of the AD8339 to degrade the system noise figure (NF) by 1 dB, the combined noise of the source and the LNA should be approximately twice that of the AD8339, or 22 nV/√Hz. If the noise of the circuitry before the AD8339 is less than 22 nV/√Hz, the system NF degrades more than 1 dB. For example, if the noise contribution of the LNA and source is equal to the AD8339, or 11 nV/√Hz, the degradation is 3 dB. If the circuit noise preceding the AD8339 is 1.3× as large as that of the AD8339 (or ~14 nV/√Hz), the degradation is 2 dB. For a circuit noise 1.45× that of the AD8339 (16 nV/√Hz), the degradation is 1.5 dB.

To determine the input referred noise, it is important to know the active low-pass filter (LPF) values $R_{FILT}$ and $C_{FILT}$, shown in Figure 53. Typical filter values for a single channel are 1.58 kΩ for $R_{FILT}$ and 1 nF for $C_{FILT}$; these values implement a 100 kHz single-pole LPF. If two channels are summed, as is done on the AD8339 evaluation board, the resistor value is halved (787 Ω) and the capacitor value is doubled (2.2 nF), maintaining the same pole frequency at twice the AD8339 current.

If the RF and LO are offset by 10 kHz, the demodulated signal is 10 kHz and is passed by the LPF. The single-channel mixing gain from the RF input to the AD8021 output (for example, I1′, Q1′) is approximately 1.7× (4.7 dB) for 1.58 kΩ and 1 nF, or 6 dB less for filter values of 787 Ω and 2.2 nF (0.85× or −1.3 dB). The noise contributed by the AD8339 is then 11 nV/√Hz × 1.7 or ~18.7 nV/√Hz at the AD8021 output. The combined noise of the AD8021 and the 1.58 kΩ feedback resistor is 6.3 nV/√Hz, so the total output referred noise is approximately 19.7 nV/√Hz. This value can be adjusted by increasing the filter resistor while maintaining the corner frequency, thereby increasing the gain. The factor limiting the magnitude of the gain is the output swing and drive capability of the op amp selected for the I-to-V converter, in this example, the AD8021.

The limitation on the number of channels summed is the drive capability of the amplifier, as explained in detail in the Channel Summing section.

## MULTICHANNEL SUMMATION

### *Analog Beamforming*

Beamforming, as applied to medical ultrasound, is defined as the phase alignment and summation of signals generated from a common source, but received at different times by a multielement ultrasound transducer. Beamforming has two functions: it imparts directivity to the transducer, enhancing its gain, and it defines a focal point within the body from which the location of the returning echo is derived. The primary application for the AD8339 is in analog beamforming circuits for ultrasound.

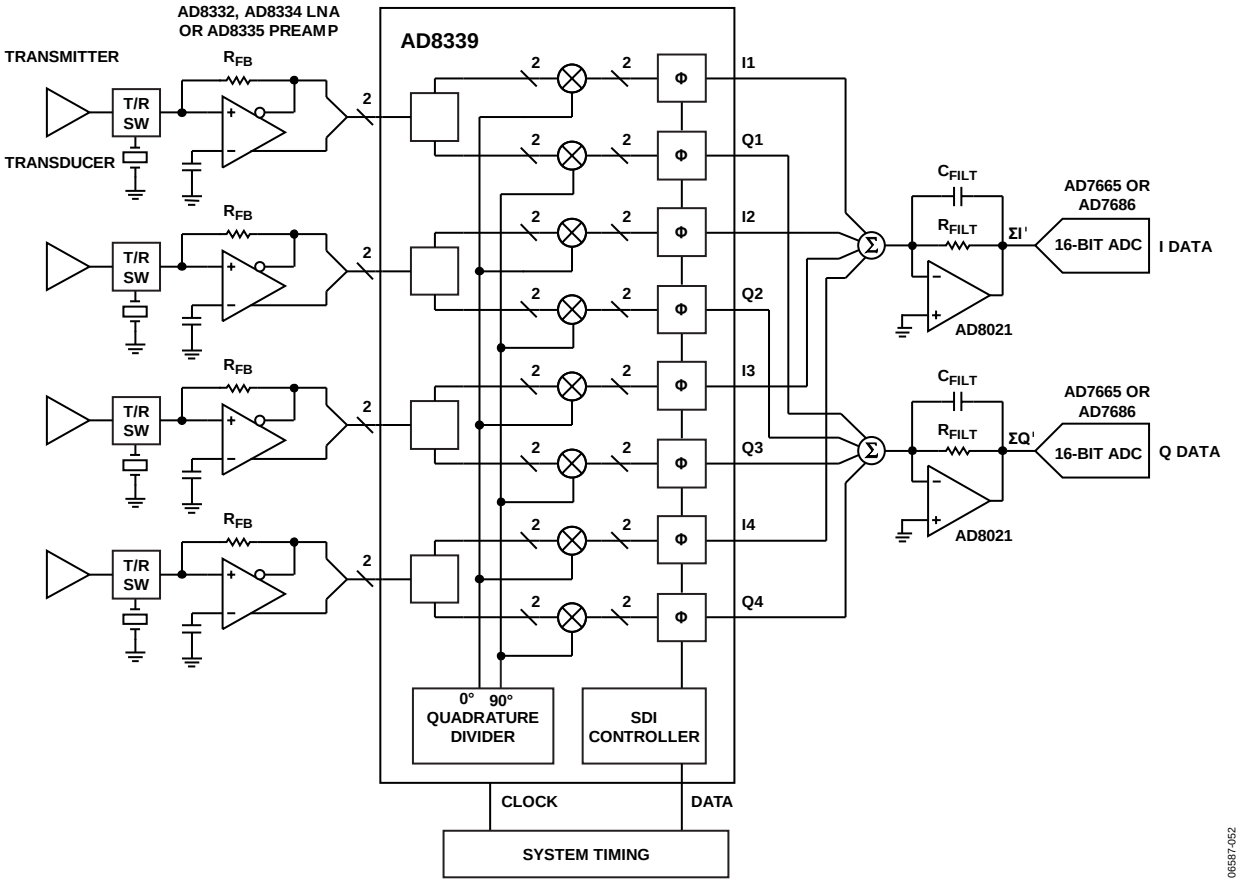


*Figure 53. Interconnection Block Diagram for the AD8339*

### *Combining Phase Compensation and Analog Beamforming*

Modern ultrasound machines used for medical applications employ an array of receivers for beamforming, with typical CW Doppler array sizes of up to 64 receiver channels that are phase shifted and summed together to extract coherent information. When used in multiples, the desired signals from each of the channels can be summed to yield a larger signal (increased by a factor N, where N is the number of channels), and the noise is increased by the square root of the number of channels. This technique enhances the signal-to-noise performance of the machine. The critical elements in a beamformer design are the means to align the incoming signals in the time domain and the means to sum the individual signals into a composite whole.

In traditional analog beamformers incorporating Doppler, a V-to-I converter per channel and a crosspoint switch precede passive delay lines used as a combined phase shifter and summing circuit. The system operates at the carrier frequency (RF) through the delay line, which also sums the signals from the various channels, and then the combined signal is down-converted by a very large dynamic range I/Q demodulator.

The resultant I and Q signals are filtered and then sampled by two high resolution analog-to-digital converters. The sampled signals are processed to extract the relevant Doppler information.

Alternatively, the RF signal can be processed by downconversion on each channel individually, phase shifting the downconverted signal, and then combining all channels. The AD8333 and the AD8339 implement this architecture. The downconversion is done by an I/Q demodulator on each channel, and the summed current output is the same as in the delay line approach. The subsequent filters after the I-to-V conversion and the ADCs are similar.

The AD8339 integrates the phase shifter, frequency conversion, and I/Q demodulation into a single package and directly yields the baseband signal. Figure 54 is a simplified diagram showing the concept for all four channels. The ultrasound wave (US wave) is received by four transducer elements, TE1 through TE4, in an ultrasound probe and generates signals E1 through E4. In this example, the phase at TE1 leads the phase at TE2 by 45°.

### *Channel Summing*

Figure 55 shows a 16-channel beamformer using AD8339s, AD8021s, and an AD797. The number of channels summed is limited by the current drive capability of the amplifier used to implement the active low-pass filter and current-to-voltage converter. An AD8021 sums up to 16 AD8339 outputs.

In an ultrasound application, the instantaneous phase difference between echo signals is influenced by the transducer-element spacing, the wavelength (λ), the speed of sound in the media, the angle of incidence of the probe to the target, and other factors. In Figure 54, the signals E1 through E4 are amplified 19 dB by the low noise amplifiers in the AD8334; for lower power portable ultrasound applications, the AD8335 can be used instead of the AD8334 for the lowest power per channel. For optimum signal-to-noise performance, the output of the LNA is applied directly to the input of the AD8339. To sum the signals E1 through E4, E2 is shifted 45° relative to E1 by setting the phase code in Channel 2 to 0010, E3 is shifted 90° (0100), and E4 is shifted 135° (0110). The phase aligned current signals at the output of the AD8339 are summed in an I-to-V converter to provide the combined output signal with a theoretical improvement in dynamic range of 6 dB for the four channels.

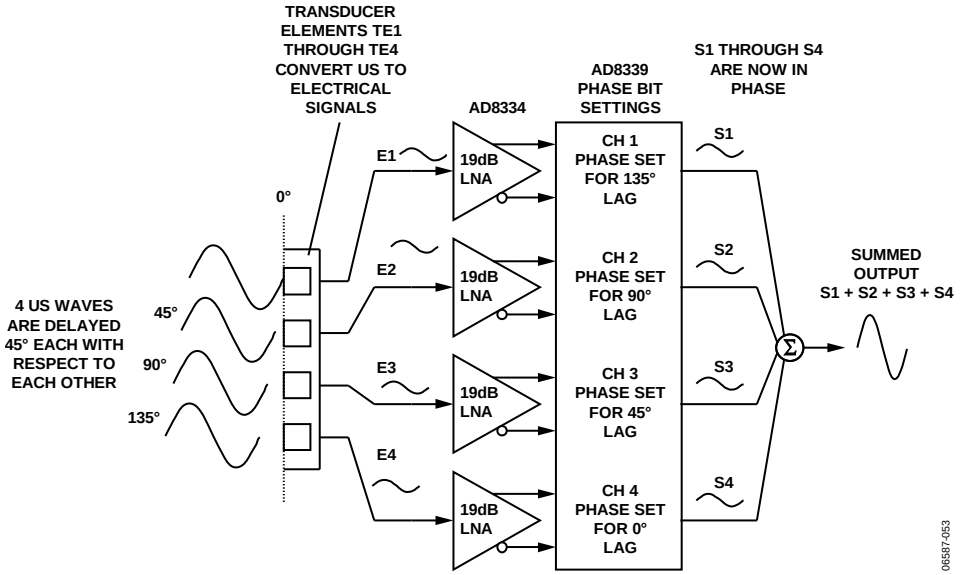


*Figure 54. Simplified Example of the AD8339 Phase Shifter*

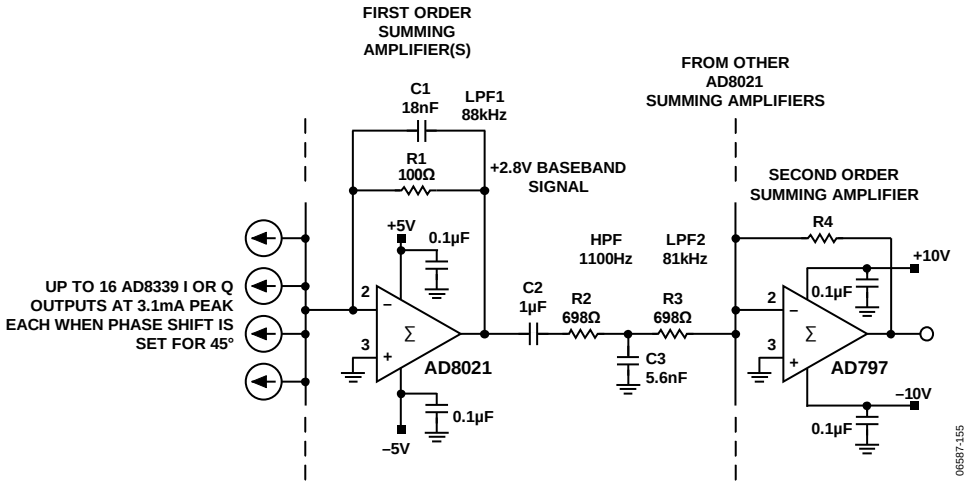


*Figure 55. 16-Channel Beamformer Using the AD8339*

# SERIAL INTERFACE

The AD8339 contains a 4-wire, SPI-compatible digital interface (SDI, SCLK, CSB, and SDO). The interface comprises a 20-bit shift register plus a latch. The shift register is loaded MSB first. Phase selection and channel enabling information are contained in the 20-bit word. Figure 56 is a bit map of the data-word, and Figure 57 is the timing diagram.

The shift direction is to the right with MSB first. Because the latch is implemented with D-flip-flops (DFF) and CSB acts as the clock to the latch, any time that CSB is low, the latch flip-flops monitor the shift register outputs. As soon as CSB goes high, the data present in the register is latched. New data can be loaded into the shift register at any time.

Twenty bits are required to program each AD8339; the data is transferred from the register to the latch when CSB goes high. Depending on the data, the corresponding channels are enabled, and the phases are selected. Figure 57 illustrates the timing for two sequentially programmed devices.

Note that the data is latched into the register flip-flops on the rising edge of SCLK. SDO also transitions on the rising edge of SCLK.

## ENBL BITS

When all four ENBL bits are low, only the SPI port is powered up. This feature allows for low power consumption (~13 mW per AD8339 or 3.25 mW per channel) when the CW Doppler function is not needed. Because the SPI port stays alive even with the rest of the chip powered down, the part can be awakened again by simply programming the port. As soon as the CSB signal goes high, the part turns on again. Note that this takes a fair amount of time because of the external capacitor on the LODC pin. It takes ~10 µs to 15 µs with the recommended 0.1 µF decoupling capacitor. The decoupling capacitor on this pin is intended to reduce bias noise contribution in the LO divider chain. The user can experiment with the value of this decoupling capacitor to determine the smallest value without degrading the dynamic range within the frequency band of interest.

The SPI also has an additional pin that can be used in a test mode or as a quick way to reset the SPI and depower the chip. All bits in both the shift register and the latch are reset low when the RSTS pin is pulled above ~1.5 V. For quick testing without the need to program the SPI, the voltage on the RSTS pin should be first pulled high and then pulled to −1.4 V. This enables all four channels in the phase (I = 1, Q = 0) state (all phase bits are 0000); the channel enable bits are all set to 1. This is an untested threshold not intended for continuous operation.

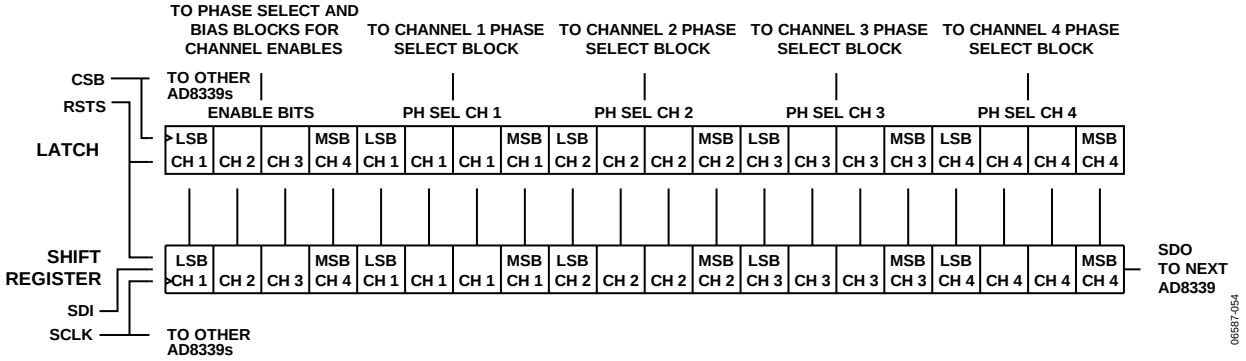


*Figure 56. Serial Interface Showing the 20-Bit Shift Register and Latch*

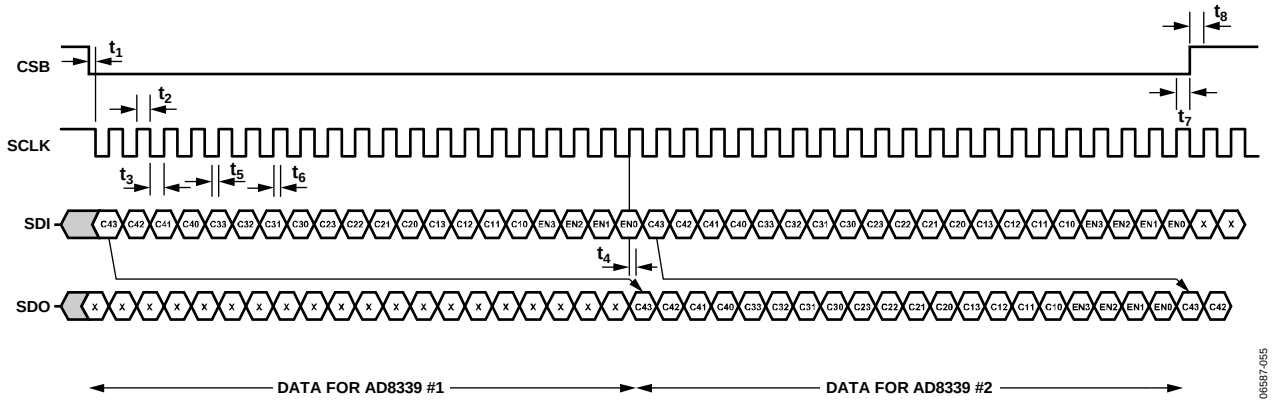


*Figure 57. Timing Diagram*

# APPLICATIONS INFORMATION

The AD8339 is the key component of a phase shifter system that aligns time-skewed information contained in RF signals. Combined with a variable gain amplifier (VGA) and a low noise amplifier (LNA) as in the AD8332/AD8334/AD8335 VGA family, the AD8339 forms a complete analog receiver for a high performance ultrasound CW Doppler system.

## LOGIC INPUTS AND INTERFACES

The SDI, SCLK, SDO, CSB, and RSET pins are CMOS compatible to 1.8 V. The threshold of the RSTS pin is 1.5 V with a hysteresis of ±0.3 V. Each logic input pin is Schmitt trigger activated, with a threshold centered at ~1.3 V and a hysteresis of ±0.1 V around this value.

The only logic output, SDO, generates a signal that has a logic low level of ~0.2 V and a logic high level of ~1.9 V to allow for easy interfacing to the next AD8339 SDI input. Note that the capacitive loading for the SDO pin should be kept as small as possible (<5 pF), ideally only a short trace to the SDI pin of the next chip. The output slew is limited to approximately ±500 μA, which limits the speed when a large capacitor is connected. Excessive values of parasitic capacitance on the SDO pin can affect the timing and loading of data into the SDI input of the next chip.

## RESET INPUT

The RSET pin is used to synchronize the LO dividers in AD8339 arrays. Because they are driven by the same internal LO, the four channels in any AD8339 are inherently synchronous. However, when multiple AD8339s are used, it is possible that their dividers wake up in different phase states. The function of the RSET pin is to phase align all the LO signals in multiple AD8339s.

The 4LO divider of each AD8339 can be initiated in one of four possible states: 0°, 90°, 180°, or 270° relative to other AD8339s. The internally generated I/Q signals of each AD8339 LO are always at a 90° angle relative to each other, but a phase shift can occur during power-up between the dividers of multiple AD8339s used in a common array.

The LO divider reset function has been improved in the AD8339 compared with the AD8333. The RSET pin still provides an asynchronous reset of the LO dividers by forcing the internal LO to hang; however, in the AD8339, the LO reset function is fast and does not require a shutdown of the 4LO input signal.

The RSET mechanism also allows the measurement of non-mixing gain from the RF input to the output. The rising edge of the active high RSET pulse can occur at any time; however, the duration should be ≥20 ns minimum. When the RSET pulse transitions from high to low, the LO dividers are reactivated on the next rising edge of the 4LO clock. To guarantee synchronous operation of an array of AD8339s, the RSET pulse must go low on all devices before the next rising edge of the 4LO clock. Therefore, it is best to have the RSET pulse go low on the falling edge of the 4LO clock; at the very least, the $t_{SETUP}$ should be ≥5 ns. An optimal timing setup is for the RSET pulse to go high on a 4LO falling edge and to go low on a 4LO falling edge; this gives 10 ns of setup time even at a 4LO frequency of 50 MHz (12.5 MHz internal LO).

Check the synchronization of multiple AD8339s using the following procedure:

1. Activate at least one channel per AD8339 by setting the appropriate channel enable bit in the serial interface.
2. Set the phase code of all AD8339 channels to the same logic state, for example, 0000.
3. Apply the same test signal to all devices to generate a sine wave in the baseband output and measure the output of one channel per device.
4. Apply an RSET pulse to all AD8339s.
5. Because all the phase codes of the AD8339s should be the same, the combined signal of multiple devices should be N times greater than a single channel. If the combined signal is less than N times one channel, one or more of the LO phases of the individual AD8339s is in error.

## LO INPUT

The LO input is a high speed, fully differential analog input that responds to differences in the input levels (and not logic levels). The LO inputs can be driven with a low common-mode voltage amplifier, such as the National Semiconductor® DS90C401 LVDS driver. The graph in Figure 22 shows the range of common-mode voltages. Logic families such as TTL or CMOS are unsuitable for direct coupling to the LO input.

# EVALUATION BOARD

Figure 58 is a photograph of the AD8339 evaluation board; the schematic diagrams are shown in Figure 63, Figure 64, and Figure 65. Four single-ended RF inputs can be phase aligned using the LNA inputs of an AD8334 and the 16 phase adjustment options of the AD8339. The RF input signals can be derived from three sources, user selectable by jumpers. Test points enable signal tracing at various circuit nodes.

The AD8339-EVALZ requires bipolar 5 V power supplies. A 3.3 V on-board regulator provides power for the USB and EEPROM devices. The AD8339 is configured using the software provided on the CD included with the evaluation board, or using an external digital pattern generator via the 20-pin flat-cable connector P1.

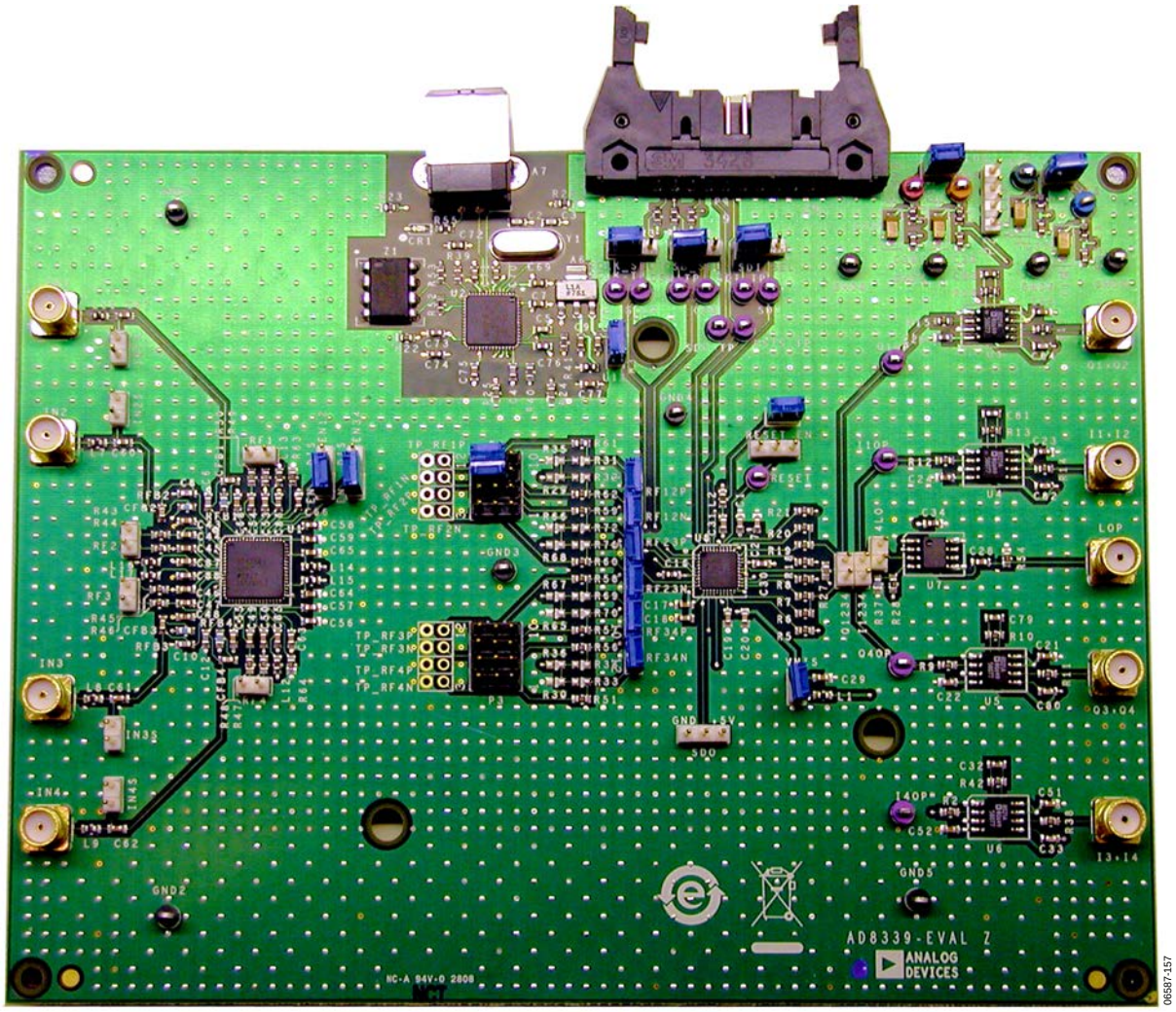


*Figure 58. AD8339 Evaluation Board*

## CONNECTIONS TO THE BOARD

Table 5 is a list of equipment required to activate the board with suggested test equipment, and Figure 61 shows a typical setup. A green LED glows (signifying that the 5 V power through the USB is present) when the computer is connected via the USB. However, the LED does not signify that the program is running.

Selecting the frequency of the generators is quite simple. As an example, select an RF frequency of interest, for example, 5 MHz. Then select the 4LO frequency, which is four times the RF frequency, in this example, 20 MHz. The output frequency is 0 Hz. Note that the AD8021 outputs are at either a positive or negative dc voltage under this condition of perfect RF and 4LO frequency lock; it is more likely that the signal is slowly varying if the lock is not perfect.

To detect an output, advance or retard the RF frequency by the desired baseband frequency. A baseband frequency of 10 kHz at the output results from an RF frequency of 5.01 MHz or 4.99 MHz.

**Table 5. Recommended Equipment List**

| Description | Suggested Equipment |
|---|---|
| PC with Windows® XP | Any recent laptop |
| Signal Generators (2) with Synchronizing Connectors | Rohde & Schwarz SMT03 or equivalent |
| 4-Channel Oscilloscope | Tektronix DPO7104 or equivalent |
| Power Supplies | Agilent E3631A or equivalent |
| Scope Probes (4) | Tektronix P6104 or equivalent |

## TEST CONFIGURATIONS

The three test configuration options for the AD8339-EVALZ are common input, independent input, and AD9271 drive.

### *Common Input Signal Drive*

Figure 59 is a block diagram showing the simplest way to use the evaluation board, with a common signal applied to all four AD8339 inputs in parallel. Boards are configured this way as shipped. The inputs of each of the channels are connected in common by means of jumpers, as shown in Table 6, although they can just as easily be connected to any of the AD8334 LNA outputs. As shown in Figure 64, two pairs of summing amplifiers provide the I and Q outputs so that Channel 1 and Channel 2 can be observed independently of Channel 3 and Channel 4.

Using a common input signal source as shown in Figure 61, the same input is applied to all four channels of the AD8339. To observe an output at the I or Q connectors, simply enable the appropriate channel or channels using the menu shown in Figure 62. For example, if only Channel 1 is enabled and the phases are set to 0°, a waveform is seen at the I1 + I2 and Q1 + Q2 outputs. If Channel 2 is enabled with the phase also set to 0°, the amplitude of the waveforms doubles. If the Channel 1 phase is 0° and the Channel 2 phase is set to 180°, the output becomes zero, because the phases of the two channels cancel each other out.

When using the common input drive mode, it is important that only the top two positions of P4A and P4B be used to avoid shorting the LNA outputs together.

### *Independent Channel Drive*

Independent input mode means that each channel is driven by an LNA. The LNA inputs of the AD8334 can be driven by up to four independent signal generators or from a single generator. If the user chooses this mode, it is important not to connect the LNA inputs in parallel because of the active matching feature. Any standard splitter can be used.

### *AD9271 Input Drive*

Connectors P3A, P3B, P4A, and P4B are configured to route input signals from the AD8334 LNA outputs or from an AD9271 evaluation board. The AD9271 is an octal ultrasound front end with a 12-bit ADC for each channel. When using an AD9271 as an input drive, consult the AD9271 data sheet for setup details.

The AD9271 evaluation board is attached to the AD8339 by inserting the three plastic standoffs into the three guide holes in the AD8339-EVALZ board; all the jumpers in P3 and P4 are removed. The bottom connectors of the AD9271 board engage P3 and P4 and route the LNA outputs of the AD9271 to the AD8339. Figure 60 is a photograph of the two boards attached.

**Table 6. P3, P4 Input Jumper Configuration**

| Common Input | Independent Input |
|---|---|
| P4A-1 to P4B-1, top two positions (2) | P3A-1 to P3B-1, P4A-1 to P4B-1 |
| RF12N, RF12P, RF23N, RF23P, RF34N, RF34P | P3A-1 to P3B-1, P4A-1 to P4B-1, all positions (8) |

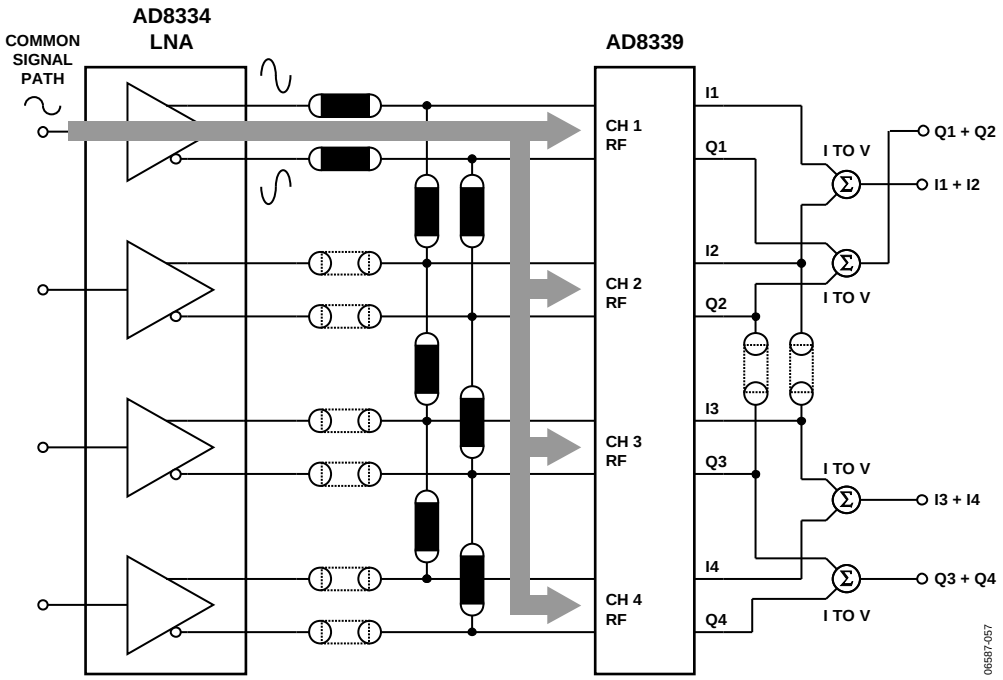


*Figure 59. AD8339 Test Configuration—Common Input Signal Drive*

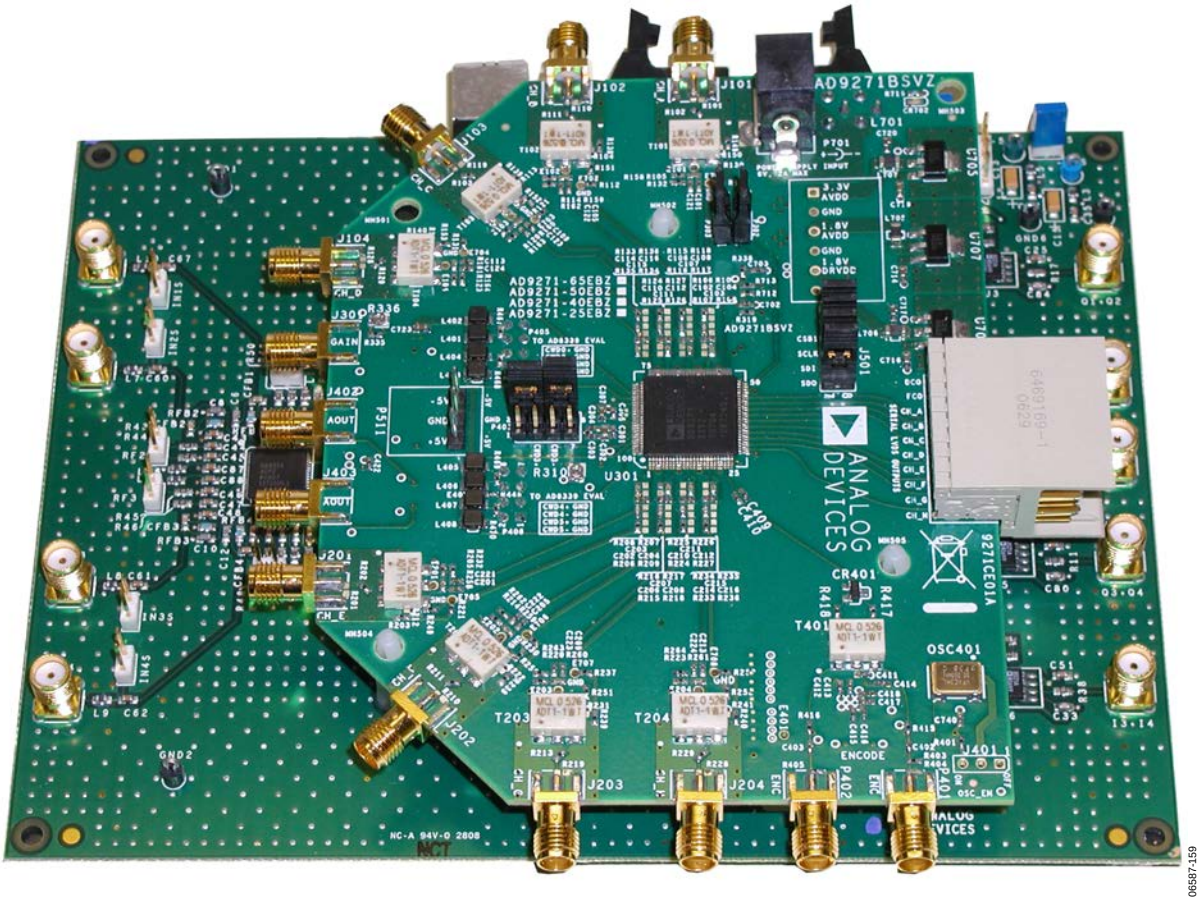


*Figure 60. AD8339-EVALZ with AD9271 Evaluation Board Attached as Input Source*

TOP:
SIGNAL GENERATOR FOR 4LO INPUT (FOR EXAMPLE, 20MHz, 1Vp-p)
BOTTOM:
SIGNAL GENERATOR FOR RF INPUT (FOR EXAMPLE, 5.01MHz)

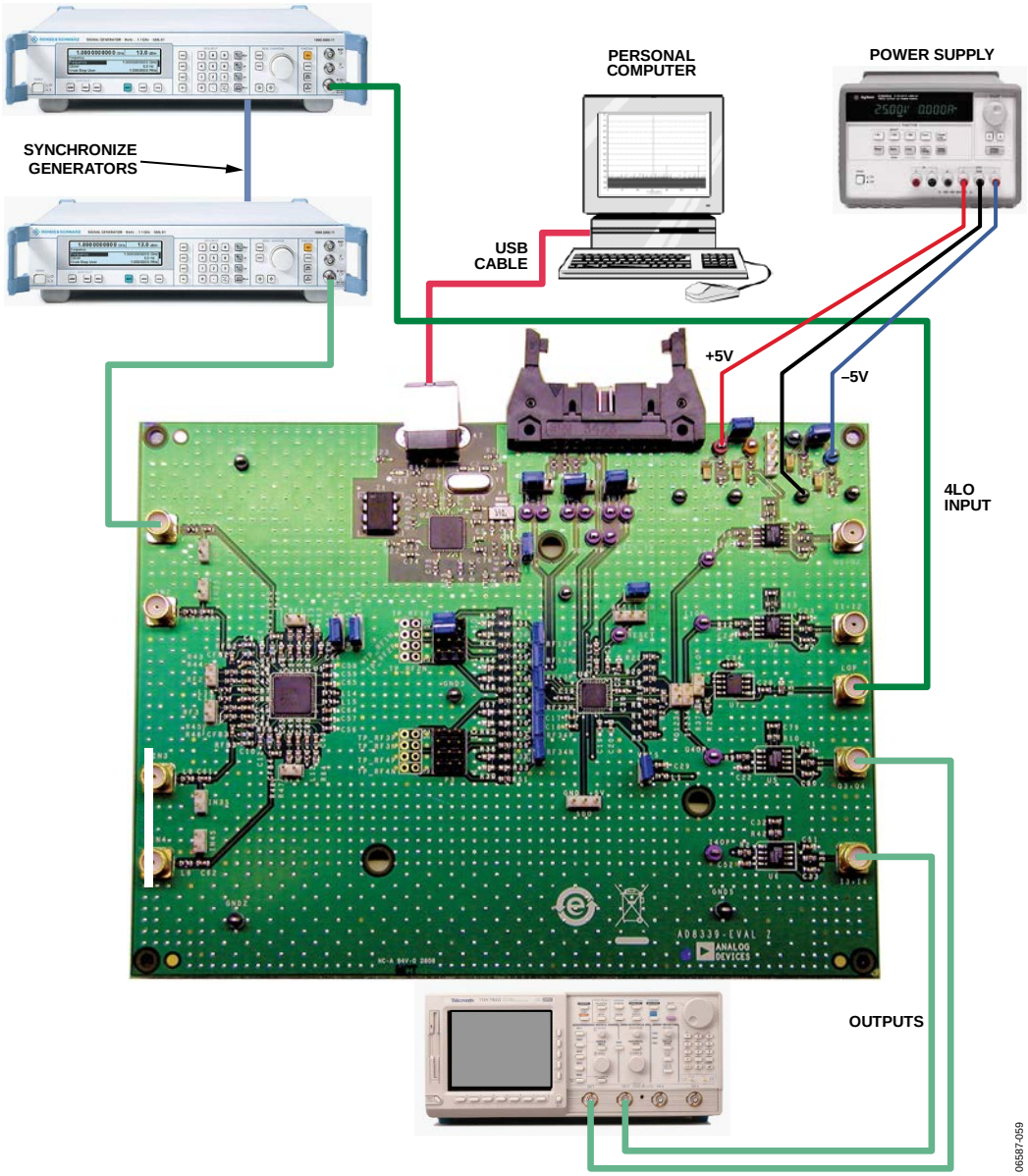


*Figure 61. AD8339-EVALZ Typical Test Setup*

### *Using the SPI Port*

Channel and phase selection are accessed via the SPI port on the AD8339, and the evaluation board provides two means of access. If it is desired to exercise the SPI input with custom waveforms, the SDI, SCLK, and CSB pins are available at the auxiliary connector P1. A digital pattern generator can be programmed in conformance with the timing diagram shown in Figure 57.

The most convenient way to select channels and phase delays is through the USB port of a PC using the executable program provided on the CD or at the Analog Devices, Inc., website. Copy the .EXE and .MSI files into the same folder on the PC. Double-click the .EXE file to install the program and place a shortcut on the desktop. Double-clicking the desktop icon opens the control menu, as shown in Figure 62.

The menu consists of an array of options that are self-explanatory. Channels are enabled or disabled by selecting the channels in the Channel Enable list, and the 16 phase options are selected from the list box for each of the channels.

### *Hardwired Jumpers*

Hardwired jumpers provide for interconnection of channels and as a means for measuring output voltages at various strategic nodes (see Table 7).

As shipped, the evaluation board is configured to connect all the AD8339 RF inputs to a single LNA output. In this configuration, the phases of the four channels can be shifted throughout the full range and the outputs can be viewed on a multichannel scope using one of the channels as a reference. To operate all the LNA channels independently, it is only necessary to move the input shorting jumpers to the channel RF outputs.

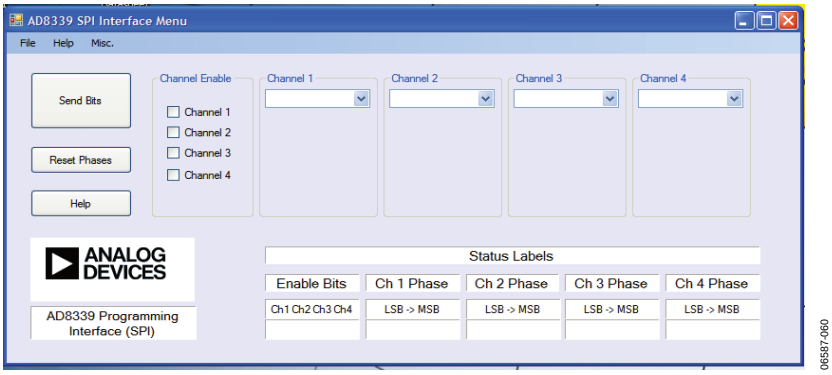


*Figure 62. SPI Software Control Menu*

**Table 7. Jumper and Header List**

| Jumper, Header | Description |
|---|---|
| CSB | Connects the chip select input to the connector or the USB inputs—normally connected to USB (test) |
| CSBG | Grounds the CSB input—shipped omitted |
| EN12, EN34 | Enables or disables Channel 1 through Channel 4—boards shipped enabled |
| I1234 | Sums all four I-channel current outputs together—shipped omitted |
| Q1234 | Sums all four Q-channel current outputs together—shipped omitted |
| RF1 to RF4 | Test points for the LNA outputs—a differential probe fits these |
| RSTS | Resets the SPI input—shipped omitted |
| RSET | Resets the local oscillator input—shipped omitted |
| SCLK | Connects the serial clock input to the connector or to the USB inputs—normally connected to USB (test) |
| SDI | Connects the serial data input to the connector or to the USB input—normally connected to USB (test) |
| SLKG | Grounds the serial clock input—shipped omitted |
| 4LO | Test pins for the 4LO level shifter output—a differential probe fits these |

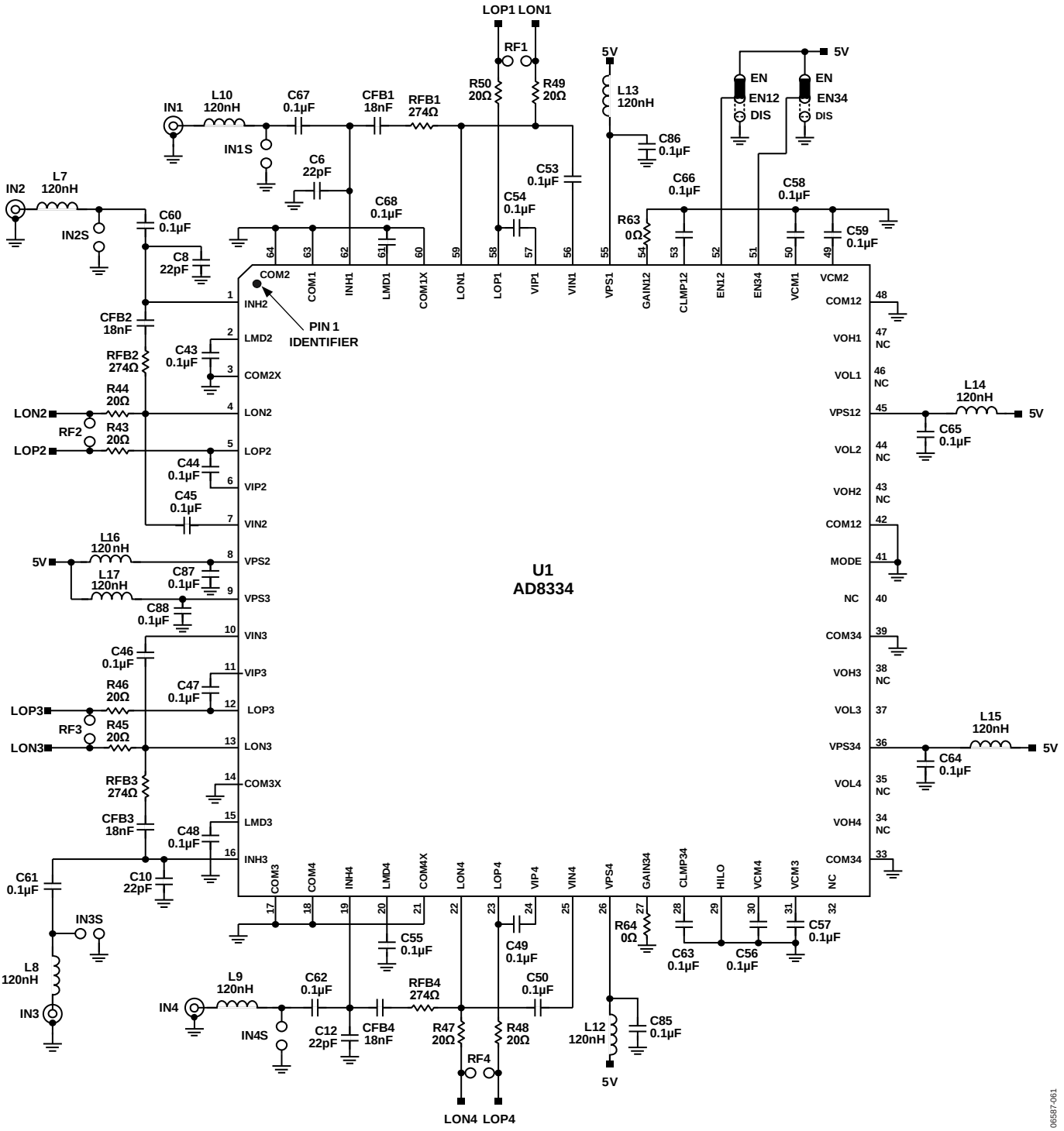


*Figure 63. Schematic—LNA Section*

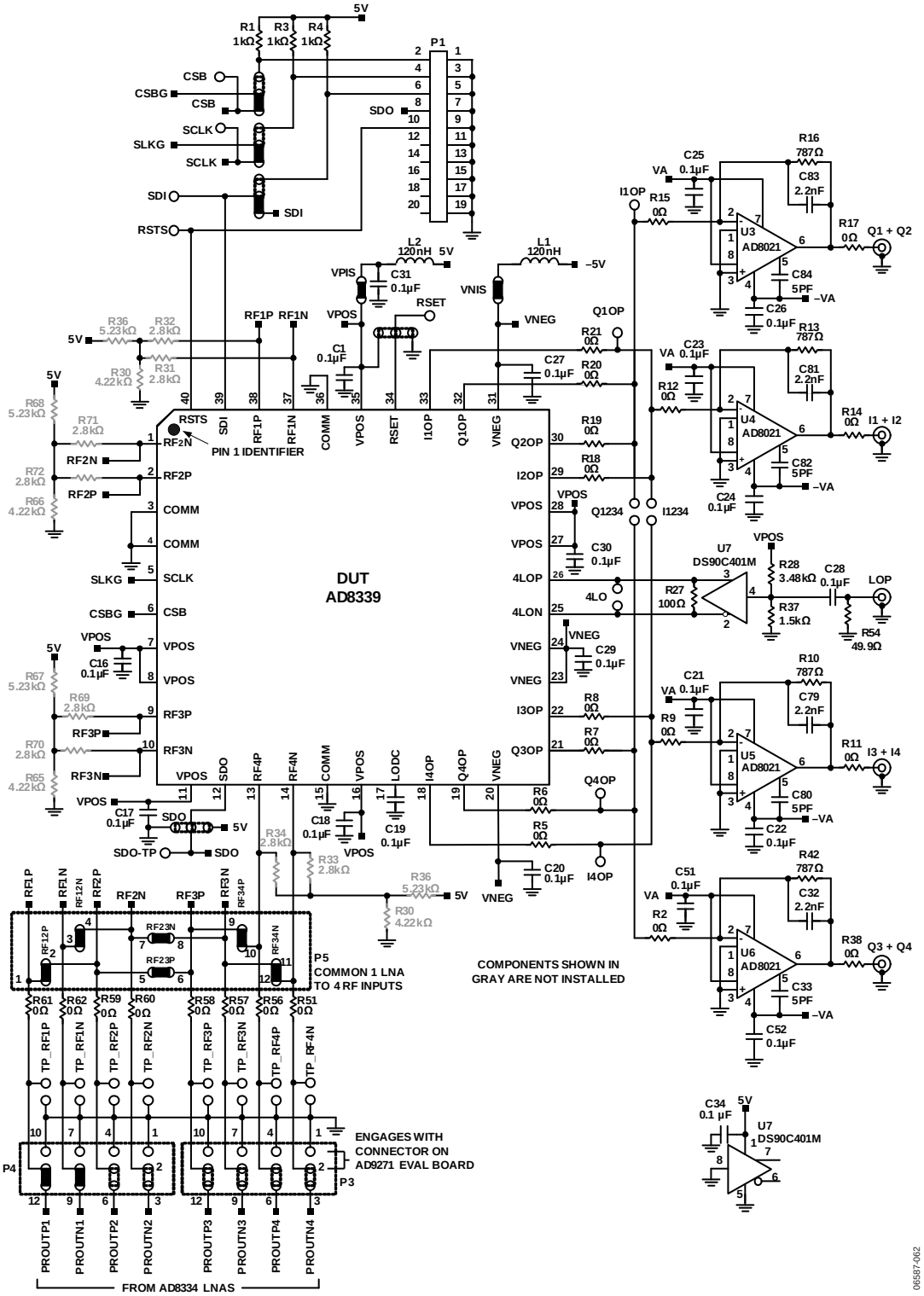


*Figure 64. Schematic—IQ Demodulator and Phase Shifter*

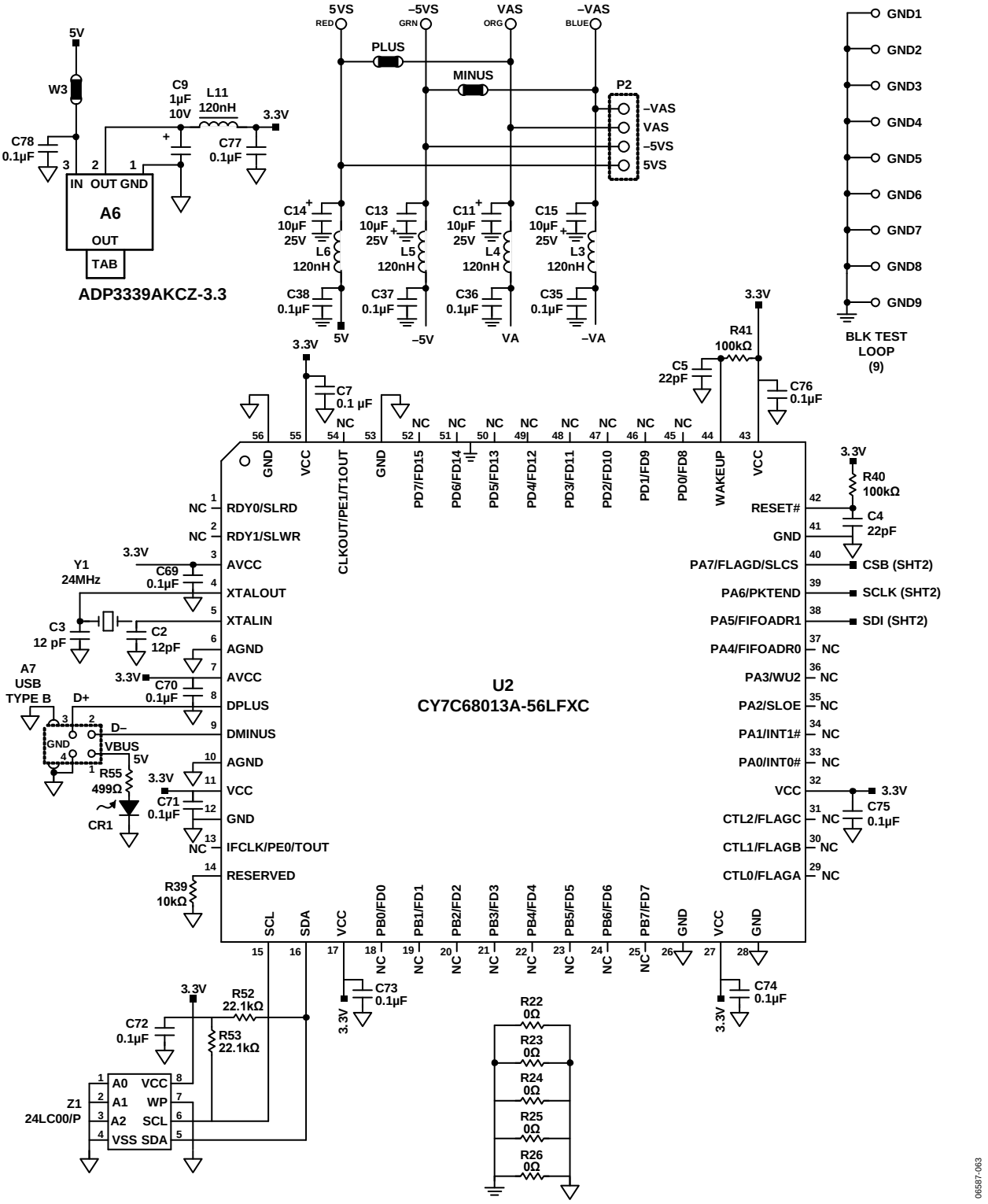


*Figure 65. Schematic—USB*

## AD8339-EVALZ ARTWORK

Figure 66 through Figure 69 show the artwork for the AD8339-EVALZ.

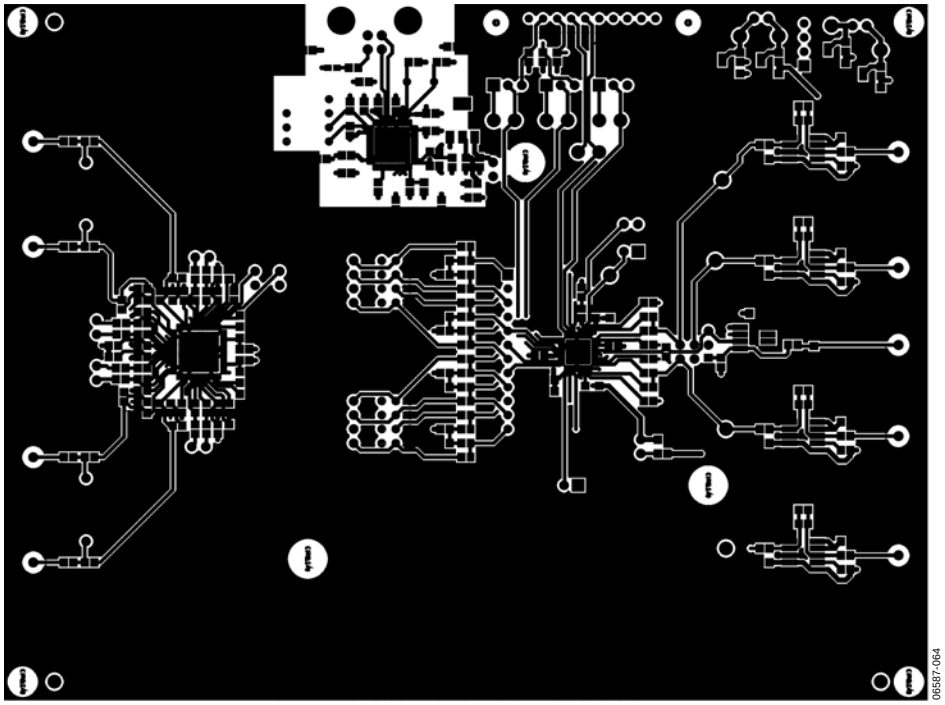


*Figure 66. AD8339-EVALZ Component Side Copper*

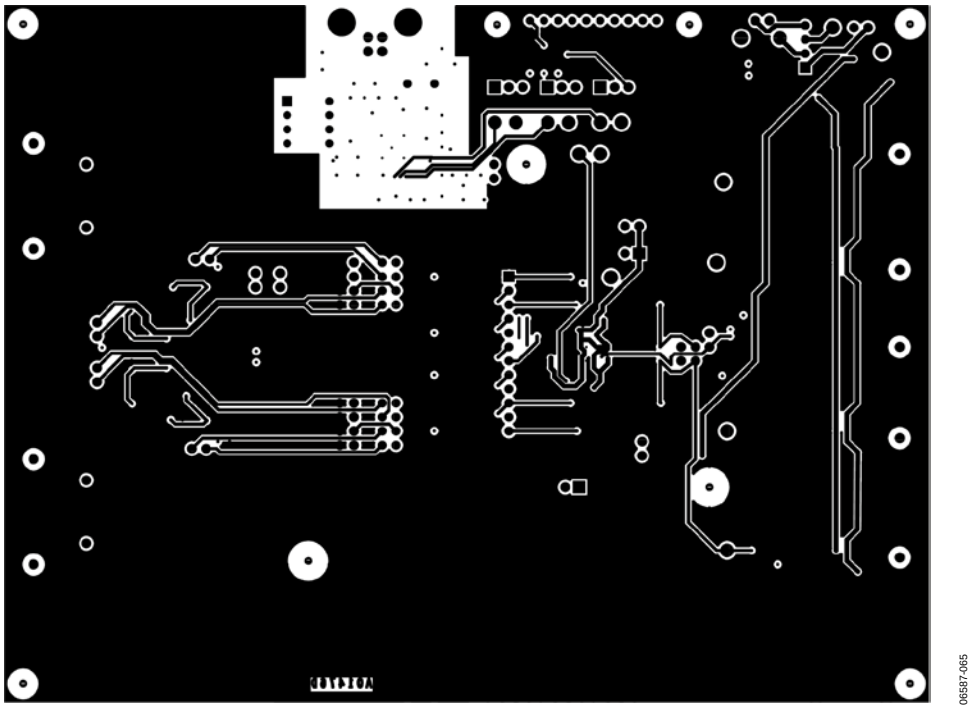


*Figure 67. AD8339-EVALZ Wiring Side Copper*

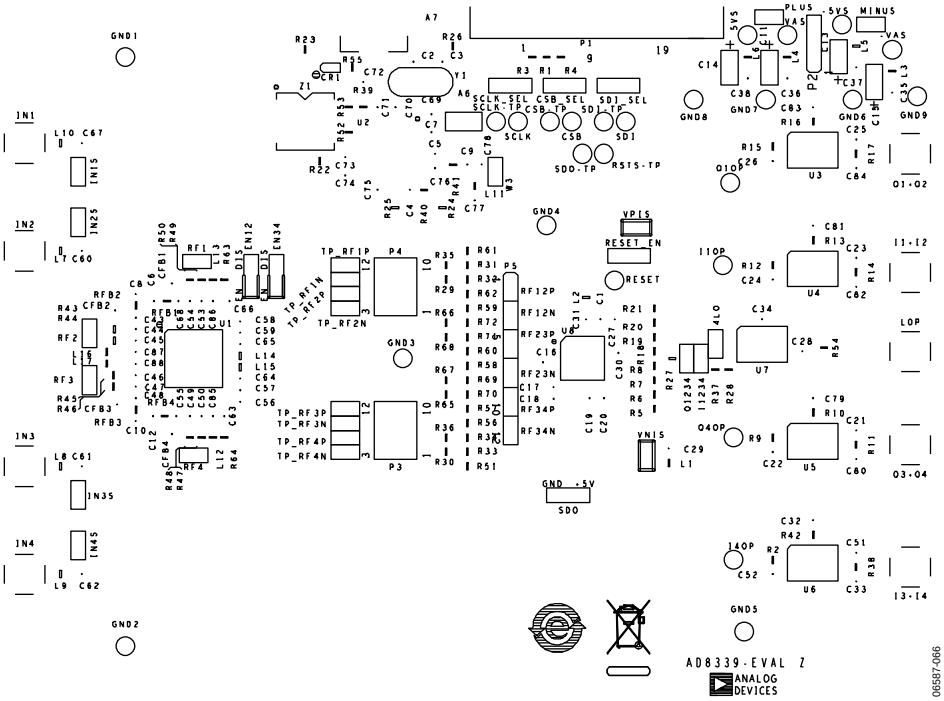


*Figure 68. AD8339-EVALZ Component Side Silkscreen*

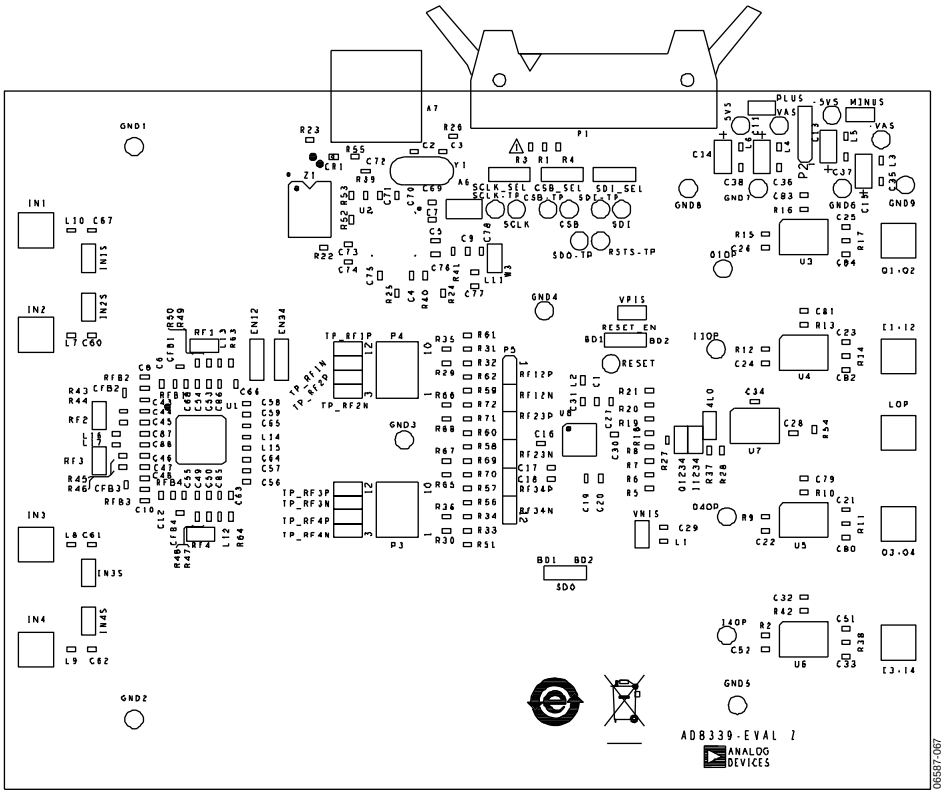


*Figure 69. AD8339-EVALZ Assembly*

# OUTLINE DIMENSIONS

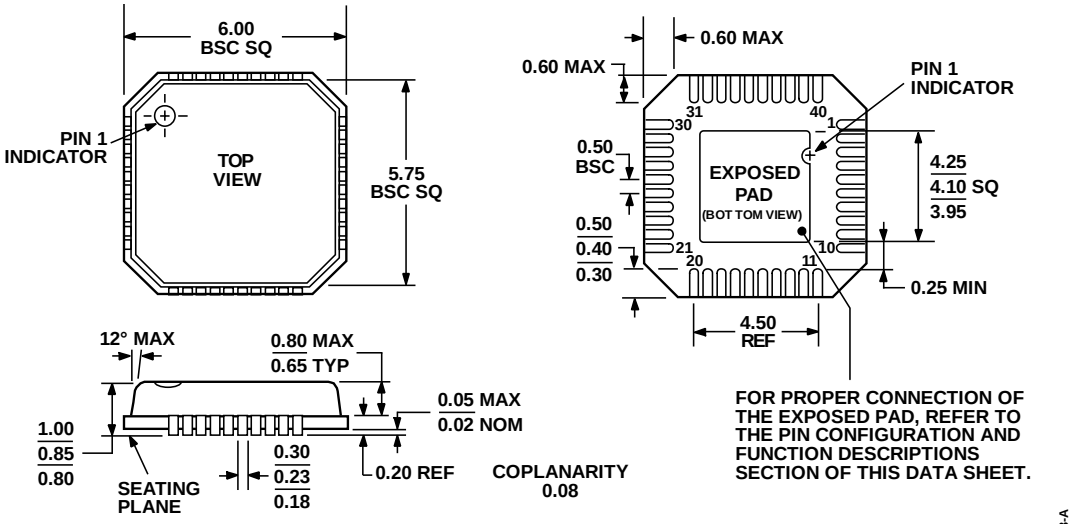


*Figure 70. 40-Lead Lead Frame Chip Scale Package [LFCSP_VQ]*
*6 mm × 6 mm Body, Very Thin Quad*
*(CP-40-1)*
*Dimensions shown in millimeters*

## ORDERING GUIDE

| Model[1] | Temperature Range | Package Description | Package Option |
|---|---|---|---|
| AD8339ACPZ | −40°C to +85°C | 40-Lead Lead Frame Chip Scale Package [LFCSP_VQ] | CP-40-1 |
| AD8339ACPZ-R7 | −40°C to +85°C | 40-Lead Lead Frame Chip Scale Package [LFCSP_VQ] | CP-40-1 |
| AD8339ACPZ-RL | −40°C to +85°C | 40-Lead Lead Frame Chip Scale Package [LFCSP_VQ] | CP-40-1 |
| AD8339-EVALZ | | Evaluation Board | |

[1] Z = RoHS Compliant Part.

# NOTES

©2007–2012 Analog Devices, Inc. All rights reserved. Trademarks and registered trademarks are the property of their respective owners.
D06587-0-7/12(B)

Общество с ограниченной ответственностью «МосЧип» ИНН 7719860671 / КПП 771901001
Адрес: 105318, г.Москва, ул.Щербаковская д.3, офис 1107

**Данный компонент на территории Российской Федерации**

**Вы можете приобрести в компании MosChip.**

Для оперативного оформления запроса Вам необходимо перейти по данной ссылке:

http://moschip.ru/get-element

Вы можете разместить у нас заказ для любого Вашего проекта, будь то серийное производство или разработка единичного прибора.

В нашем ассортименте представлены ведущие мировые производители активных и пассивных электронных компонентов.

Нашей специализацией является поставка электронной компонентной базы двойного назначения, продукции таких производителей как XILINX, Intel (ex.ALTERA), Vicor, Microchip, Texas Instruments, Analog Devices, Mini-Circuits, Amphenol, Glenair.

Сотрудничество с глобальными дистрибьюторами электронных компонентов, предоставляет возможность заказывать и получать с международных складов практически любой перечень компонентов в оптимальные для Вас сроки.

На всех этапах разработки и производства наши партнеры могут получить квалифицированную поддержку опытных инженеров.

Система менеджмента качества компании отвечает требованиям в соответствии с ГОСТ Р ИСО 9001, ГОСТ РВ 0015-002 и ЭС РД 009

**Офис по работе с юридическими лицами:**

105318, г.Москва, ул.Щербаковская д.3, офис 1107, 1118, ДЦ «Щербаковский»

Телефон: +7 495 668-12-70 (многоканальный)

Факс: +7 495 668-12-70 (доб.304)

E-mail: info@moschip.ru

Skype отдела продаж:
moschip.ru
moschip.ru_4
moschip.ru_6
moschip.ru_9