4.5 TO 24 VDC UNIPOLAR DEVICE

103SR13A-1

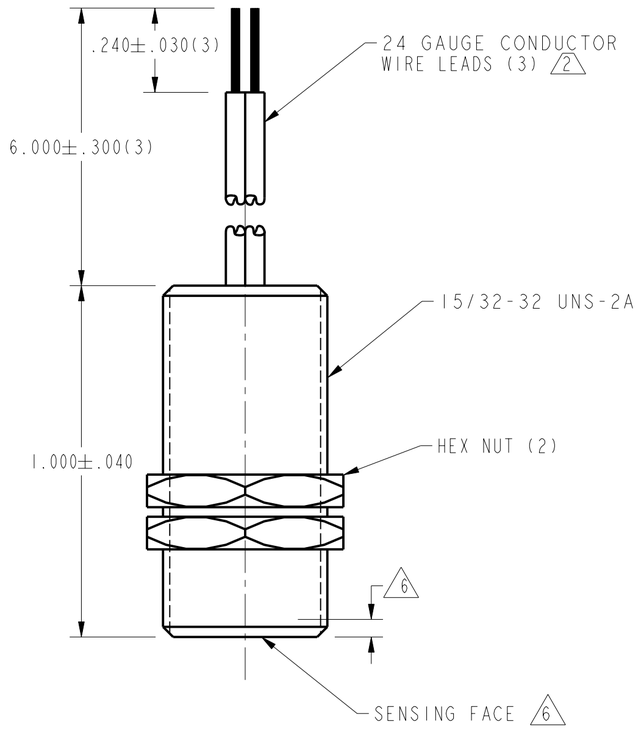

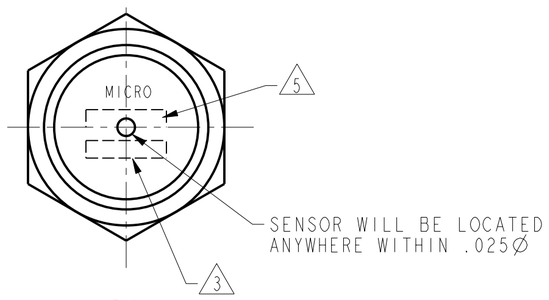

FIG. 1

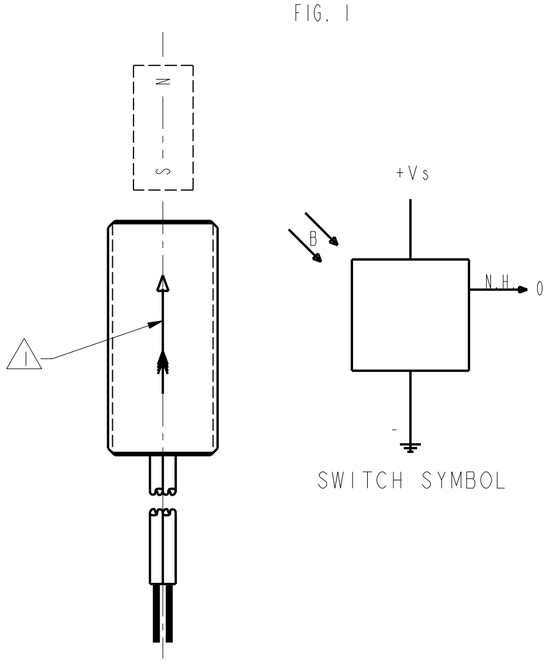

SWITCH SYMBOL

FIG. 2
OPERATE

OPERATING CHARACTERISTICS 1 4

GAUSS	
OPERATE MAX	495
RELEASE MIN	200
DIFF MIN	35

ABSOLUTE MAXIMUM RATINGS

SUPPLY VOLTAGE (Vs) 8	-1.0 VDC TO +25.0 VDC
VOLTAGE EXTERNALLY APPLIED TO OUTPUT	+25 VOLTS DC MAX WITH SWITCH IN "OFF" CONDITION ONLY -0.5 VOLTS MAX WITH SWITCH IN "OFF" OR "ON" CONDITION
OUTPUT CURRENT	40 mA (SINK PER OUTPUT)
TEMPERATURE OPERATE AND STORAGE	-40°C TO 100°C
MAGNETIC FLUX	NO LIMIT, THE CIRCUIT CANNOT BE DAMAGED BY MAGNETIC OVERDRIVE

ELECTRICAL CHARACTERISTICS

	MIN	TYP	MAX	REMARKS
SUPPLY CURRENT 7			10.0 mA	ON CONDITION
OUTPUT VOLTAGE (OPERATED)			0.4 V	SINKING 20 mA PER OUTPUT
OUTPUT LEAKAGE CURRENT (RELEASED)			20μ A	LEAKAGE INTO SWITCH OUTPUT
OUTPUT SWITCHING TIME (SINKING 20 mA) RISE TIME 4 FALL TIME			 1.5μ SEC 0.5μ SEC	 10% TO 90% 90% TO 10%

NOTE: THIS DEVICE IS NOT PROTECTED AGAINST HIGH ELECTRICAL NOISE. IF ERRATIC OPERATION OCCURS AFTER INSTALLATION, INSTALL A CAPACITOR ACROSS THE INPUT TERMINALS (0.1 MFD). IF ERRATIC OPERATION CONTINUES, YOU MAY HAVE TO USE THE INDUSTRIAL DEVICES THAT MICRO SWITCH MANUFACTURES. PLEASE CONTACT YOUR LOCAL FIELD REPRESENTATIVE FOR INFORMATION.

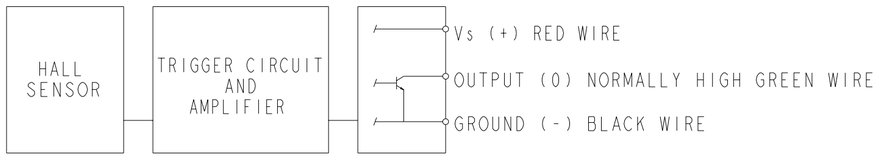

BLOCK DIAGRAM SHOWING CURRENT SINKING OUTPUTS

NOTES

1. FLUX ENTERING THE SOUTH POLE OF THE MAGNET WILL OPERATE THE SENSOR WHEN MAGNET IS POSITIONED AS SHOWN IN FIGURE 2. THIS ASSUMES THE CONVENTION THAT THE DIRECTION OF THE EXTERNAL FLUX OF A MAGNET IS FROM THE NORTH TO THE SOUTH POLE OF THE MAGNET
2. LEADWIRES (INDIVIDUAL WIRES) ARE 24 GAGE STRANDED WITH IRRADIATED POLYETHYLENE INSULATION
3. DATE CODE LOCATED IN THIS AREA
4. FROM -40° C TO 100° C AND 4.5 TO 24 VOLTS
5. CATALOG LISTING LOCATED IN THIS AREA
6. SENSITIVE AREA IS LOCATED .050 BEHIND THE SENSING FACE
7. AT 24°±2° C
8. Vs IS THE UNREGULATED SUPPLY VOLTAGE

ANSI Y14.5M-1982 APPLIES

THIS DRAWING COVERS A PROPRIETARY ITEM AND IS THE PROPERTY OF MICRO SWITCH. A DIVISION OF HONEYWELL. THIS DRAWING IS NOT TO BE COPIED OR USED WITHOUT THE APPROVAL OF MICRO SWITCH.

MICRO SWITCH a Honeywell Division
FED. MFG. CODE 91929

MAGNETICALLY OPERATED CYLINDRICAL HALL SWITCH

CATALOG LISTING
103SR13A-1

THIRD ANGLE PROJECTION

SCALE 3 " 1

DO NOT SCALE PRINT

UNLESS OTHERWISE SPECIFIED TOLERANCES ARE

ONE PLACE	(.0)	±.030
TWO PLACES	(.00)	±.015
THREE PLACES	(.000)	±.005
ANGLES		±

WEIGHT

103SR13A-1 PAGE 1 OF 1 RELEASE NO. PR-4252 REPLACES
DRAWING NUMBER
ISSUE 11
REVISIONS
A C095082A TSM 27JUL99
CHECK
CHECK 27JUL99
JAF
CHECK
DRAWN TSM 27JUL99
PTC/CAD 2D

4.5 TO 24 VDC UNIPOLAR DEVICE

103SR13A-1

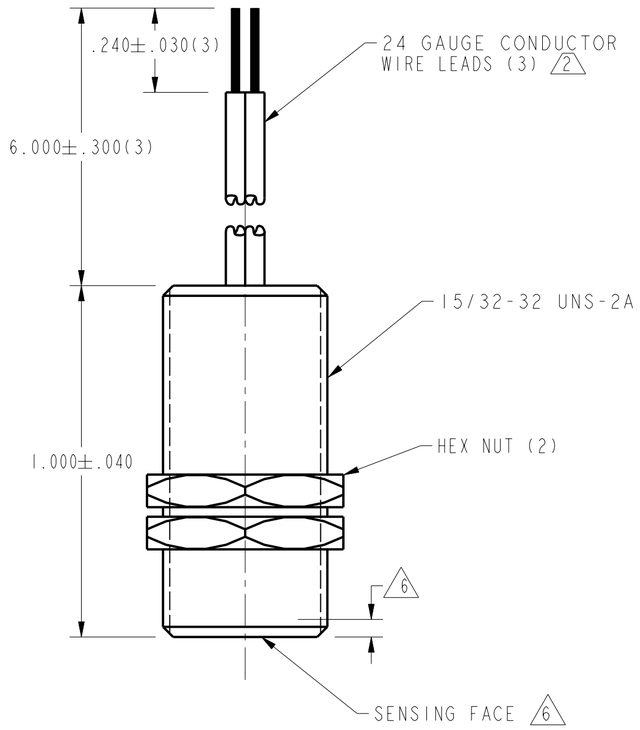

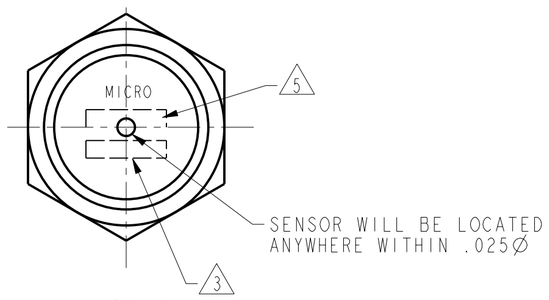

FIG. 1

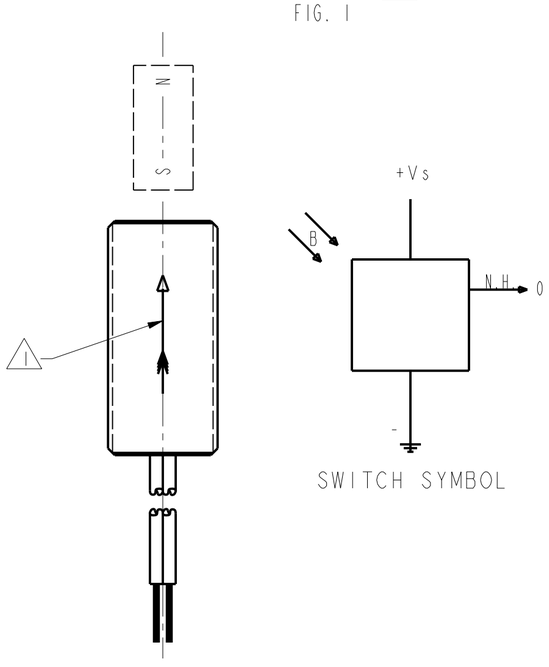

SWITCH SYMBOL

FIG. 2
OPERATE

OPERATING CHARACTERISTICS 1 4

GAUSS	
OPERATE MAX	495
RELEASE MIN	200
DIFF MIN	35

ABSOLUTE MAXIMUM RATINGS

SUPPLY VOLTAGE (Vs) 8	-1.0 VDC TO +25.0 VDC
VOLTAGE EXTERNALLY APPLIED TO OUTPUT	+25 VOLTS DC MAX WITH SWITCH IN "OFF" CONDITION ONLY -0.5 VOLTS MAX WITH SWITCH IN "OFF" OR "ON" CONDITION
OUTPUT CURRENT	40 mA (SINK PER OUTPUT)
TEMPERATURE OPERATE AND STORAGE	-40°C TO 100°C
MAGNETIC FLUX	NO LIMIT, THE CIRCUIT CANNOT BE DAMAGED BY MAGNETIC OVERDRIVE

ELECTRICAL CHARACTERISTICS

	MIN	TYP	MAX	REMARKS
SUPPLY CURRENT 7			10.0 mA	ON CONDITION
OUTPUT VOLTAGE (OPERATED)			0.4 V	SINKING 20 mA PER OUTPUT
OUTPUT LEAKAGE CURRENT (RELEASED)			20μ A	LEAKAGE INTO SWITCH OUTPUT
OUTPUT SWITCHING TIME (SINKING 20 mA)				
RISE TIME 4			1.5μ SEC	10% TO 90%
FALL TIME			0.5μ SEC	90% TO 10%

NOTE: THIS DEVICE IS NOT PROTECTED AGAINST HIGH ELECTRICAL NOISE. IF ERRATIC OPERATION OCCURS AFTER INSTALLATION, INSTALL A CAPACITOR ACROSS THE INPUT TERMINALS (0.1 MFD). IF ERRATIC OPERATION CONTINUES, YOU MAY HAVE TO USE THE INDUSTRIAL DEVICES THAT MICRO SWITCH MANUFACTURES. PLEASE CONTACT YOUR LOCAL FIELD REPRESENTATIVE FOR INFORMATION.

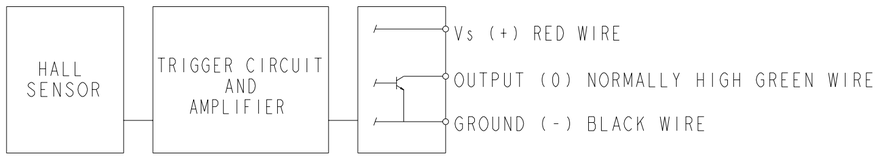

BLOCK DIAGRAM SHOWING CURRENT SINKING OUTPUTS

NOTES

1. FLUX ENTERING THE SOUTH POLE OF THE MAGNET WILL OPERATE THE SENSOR WHEN MAGNET IS POSITIONED AS SHOWN IN FIGURE 2. THIS ASSUMES THE CONVENTION THAT THE DIRECTION OF THE EXTERNAL FLUX OF A MAGNET IS FROM THE NORTH TO THE SOUTH POLE OF THE MAGNET
2. LEADWIRES (INDIVIDUAL WIRES) ARE 24 GAGE STRANDED WITH IRRADIATED POLYETHYLENE INSULATION
3. DATE CODE LOCATED IN THIS AREA
4. FROM -40° C TO 100° C AND 4.5 TO 24 VOLTS
5. CATALOG LISTING LOCATED IN THIS AREA
6. SENSITIVE AREA IS LOCATED .050 BEHIND THE SENSING FACE
7. AT 24°±2° C
8. Vs IS THE UNREGULATED SUPPLY VOLTAGE

CAUTION
ELECTROSTATIC SENSITIVE DEVICES
DO NOT OPEN OR HANDLE EXCEPT AT A STATIC FREE WORKSTATION

ESD SENSITIVITY: CLASS 3

THIRD ANGLE PROJECTION

SCALE 3 " 1

DO NOT SCALE PRINT

UNLESS OTHERWISE SPECIFIED TOLERANCES ARE

ONE PLACE	(.0)	±.030
TWO PLACES	(.00)	±.015
THREE PLACES	(.000)	±.005
ANGLES		±

WEIGHT

THIS DRAWING COVERS A PROPRIETARY ITEM AND IS THE PROPERTY OF MICRO SWITCH. A DIVISION OF HONEYWELL. THIS DRAWING IS NOT TO BE COPIED OR USED WITHOUT THE APPROVAL OF MICRO SWITCH.

MICRO SWITCH
a Honeywell Division
FED. MFG. CODE 91929

MAGNETICALLY OPERATED CYLINDRICAL HALL SWITCH

CATALOG LISTING
103SR13A-1

ANSI Y14.5M-1982 APPLIES

103SR13A-1 | PAGE 1 OF 1 | RELEASE NO. PR-4252 | REPLACES
DRAWING NUMBER | ISSUE 12 | CHECK
REVISIONS
A C095082A TSM 27JUL99
B 201747 JLH DEC00
CHECK | 27JUL99 | JAF | CHECK | 27JUL99
PTC/CAD 2D | DRAWN TSM

Общество с ограниченной ответственностью «МосЧип» ИНН 7719860671 / КПП 771901001
Адрес: 105318, г.Москва, ул.Щербаковская д.3, офис 1107

Данный компонент на территории Российской Федерации

Вы можете приобрести в компании MosChip.

Для оперативного оформления запроса Вам необходимо перейти по данной ссылке:

http://moschip.ru/get-element

Вы можете разместить у нас заказ для любого Вашего проекта, будь то серийное производство или разработка единичного прибора.

В нашем ассортименте представлены ведущие мировые производители активных и пассивных электронных компонентов.

Нашей специализацией является поставка электронной компонентной базы двойного назначения, продукции таких производителей как XILINX, Intel (ex.ALTERA), Vicor, Microchip, Texas Instruments, Analog Devices, Mini-Circuits, Amphenol, Glenair.

Сотрудничество с глобальными дистрибьюторами электронных компонентов, предоставляет возможность заказывать и получать с международных складов практически любой перечень компонентов в оптимальные для Вас сроки.

На всех этапах разработки и производства наши партнеры могут получить квалифицированную поддержку опытных инженеров.

Система менеджмента качества компании отвечает требованиям в соответствии с ГОСТ Р ИСО 9001, ГОСТ РВ 0015-002 и ЭС РД 009

Офис по работе с юридическими лицами:

105318, г.Москва, ул.Щербаковская д.3, офис 1107, 1118, ДЦ «Щербаковский»

Телефон: +7 495 668-12-70 (многоканальный)

Факс: +7 495 668-12-70 (доб.304)

E-mail: info@moschip.ru

Skype отдела продаж:
moschip.ru
moschip.ru_4
moschip.ru_6
moschip.ru_9