THIS DRAWING IS UNPUBLISHED. RELEASED FOR PUBLICATION 20
© COPYRIGHT 20 BY - ALL RIGHTS RESERVED.

REVISIONS

P	LTR	DESCRIPTION	DATE	DWN	APVD
	A15	REVISED PER ECO-11-002569	25FEB2011	DLD	DCM
	A16	REVISED PER ECO-14-011102	22JUL2014	DLD	DCM

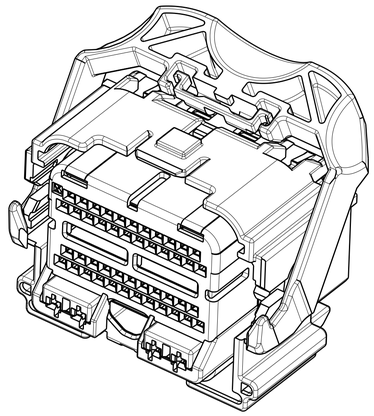

PART NUMBER:
1438691-1
SHOWN WITH SPACER
IN SEATED POSITION
SCALE 2:1

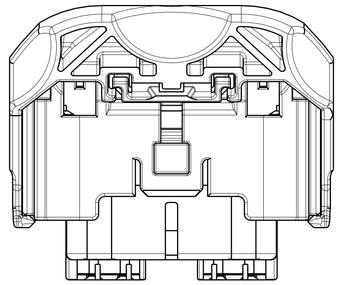

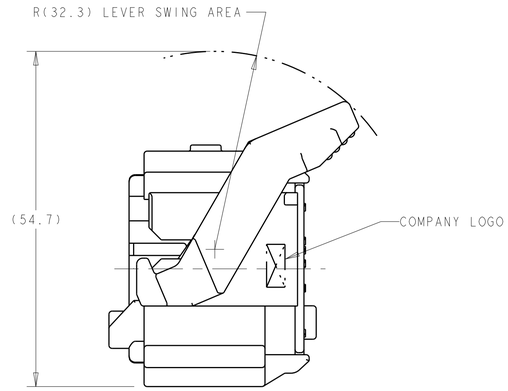

SHOWN WITH SPACER IN SEATED POSITION

1. PRINT TE PART NUMBER AND TRACEBILITY (YY : 2 DIGIT YEAR, JJJ = JULIAN DATE, HH = 2 DIGIT MILITARY HOUR CODE) IN THE LOCATION AT ASSEMBLY.

2. OPTIONAL WIRE SHIELD PART NUMBERS (SOLD SEPARATELY) 1438126, 1438180, 1488373, AND 1488572. CONTACT TE ENGINEERING FOR MINIMUM FEED THRU CONDITION.

3. APPLICABLE TERMINAL PART NUMBERS (SOLD SEPARATELY)
FOR TIN APPLICATIONS: 1393367 AND 1393366.
FOR GOLD APPLICATIONS: 1393365 AND 1393364
FOR TERMINATION AND REELING OPTIONS SEE DRAWINGS 1393367, 1393366, 1393365, AND 1393364.

4. APPLICABLE MOLEX (1.5) POWER TERMINAL PART NUMBERS:
33012-0002 TIN 0.50-1.50mm^2

5. CAM LEVER AND SPACER ARE SHIPPED IN THEIR PRE-ASSEMBLED POSITIONS.

6. REFERENCE TE INSTRUCTION SHEET 408-8893.

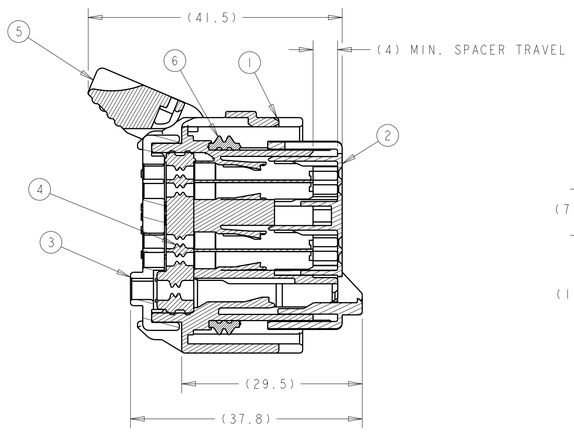

SECTION A-A
SPACER AND LEVER IN
PRE-SEATED POSITION
(DELIVERY CONDITION)

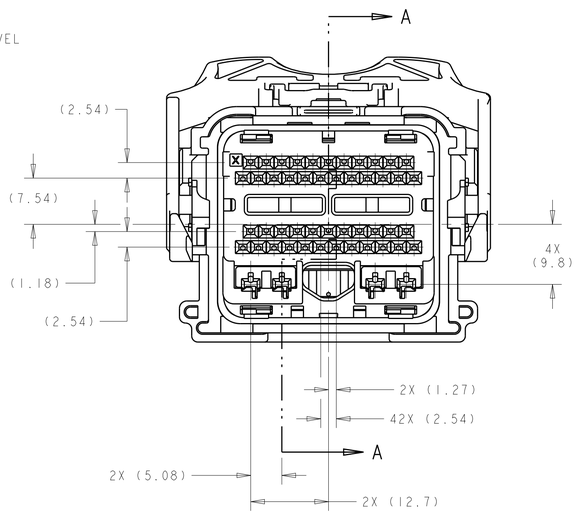

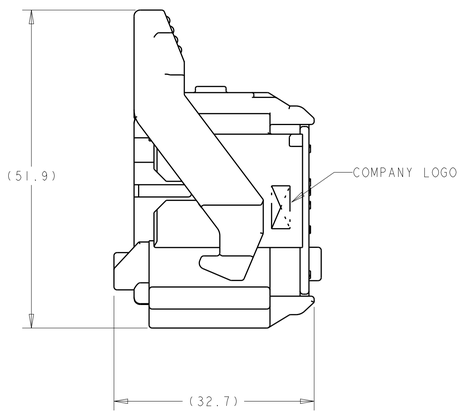

SHOWN WITH CAM
LEVER AND SPACER
IN LOADED POSITION

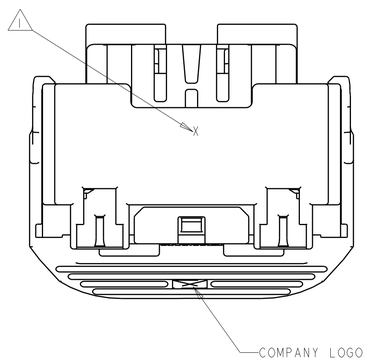

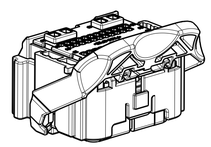

SCALE 1:1

PART COLOR	DESCRIPTION	ITEM NO.
GREEN	PERIMETER SEAL	6
GRAY	LEVER	5
BROWN	GROMMET SEAL	4
BLACK	COVER	3
RED	SPACER	2
BLACK	HARNESS, KEY "A"	1

THIS DRAWING IS A CONTROLLED DOCUMENT.

DIMENSIONS: mm

TOLERANCES UNLESS OTHERWISE SPECIFIED:
0 PLC ±-
1 PLC ±0.3
2 PLC ±0.10
3 PLC ±-
4 PLC ±-
ANGLES ±1°

MATERIAL -
FINISH -

DWN B. CRISAMORE 21JUL2004
CHK M. HITCHCOCK 21JUL2004
APVD C. MARTIN 21JUL2004
PRODUCT SPEC -
APPLICATION SPEC -
WEIGHT -

TE Connectivity

NAME
ASSEMBLY,
50-WAY, KEY A,
PCM HARNESS

SIZE	CAGE CODE	DRAWING NO	RESTRICTED TO
A1	00779	C-1438691	-

Customer Drawing
SCALE 2:1 SHEET 1 OF 4 REV A16

THIS DRAWING IS UNPUBLISHED. RELEASED FOR PUBLICATION 20
© COPYRIGHT 20 BY - ALL RIGHTS RESERVED.

APPLICABLE HEADER INTERFACE SPECIFICATION

SHOWN WITHOUT KEYING OPTIONS

REVISIONS

P	LTR	DESCRIPTION	DATE	DWN	APVD
	-	SEE SHEET 1	-	-	-

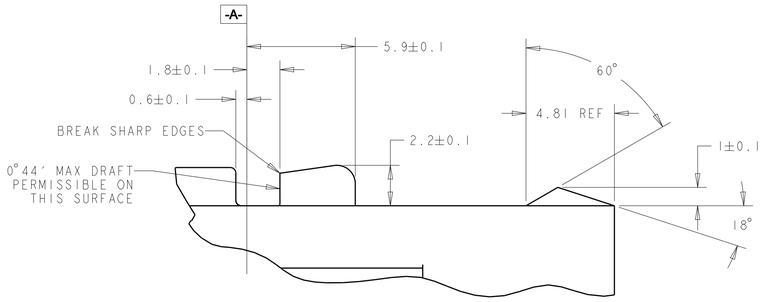

DETAIL F
SCALE 6:1

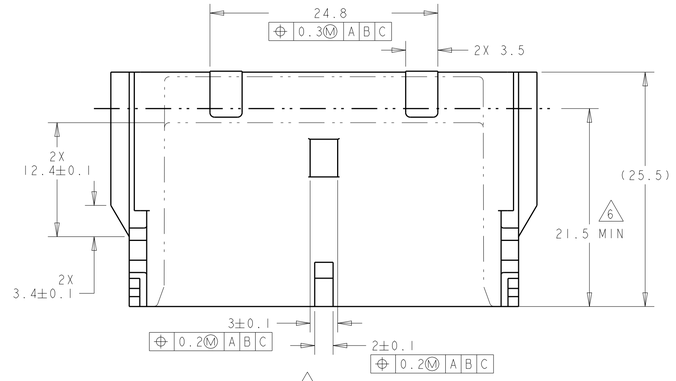

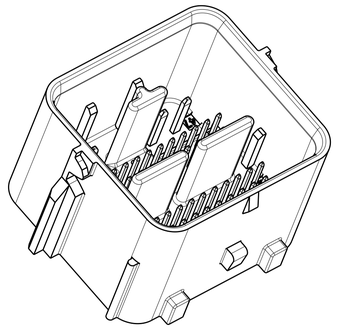

SCALE 2:1

NOTES: UNLESS OTHERWISE SPECIFIED

1. GENERAL TOLERANCE:
   ±0.3 ALL ONE PLACE DIMENSIONS
   ±0.10 ALL TWO PLACE DIMENSIONS
   ±1°00′ ALL ANGULAR DIMENSIONS
2. DRAFT ANGLE PERMISSIBLE ONLY WITHIN DRAWING TOLERANCE.
3. SEALING SURFACE, NO WITNESS LINES OR DAMAGE PERMITTED.
4. ALL UNMARKED RADII TO BE 0.5 MAX., UNLESS OTHERWISE SPECIFIED.
5. VENT HOLE SIZE AND LOCATION IS OPTIONAL.
6. THIS AREA TO REMAIN CLEAR FOR THE HARNESS ASSEMBLY.
7. TERMINAL POSITION IDENTIFICATION.

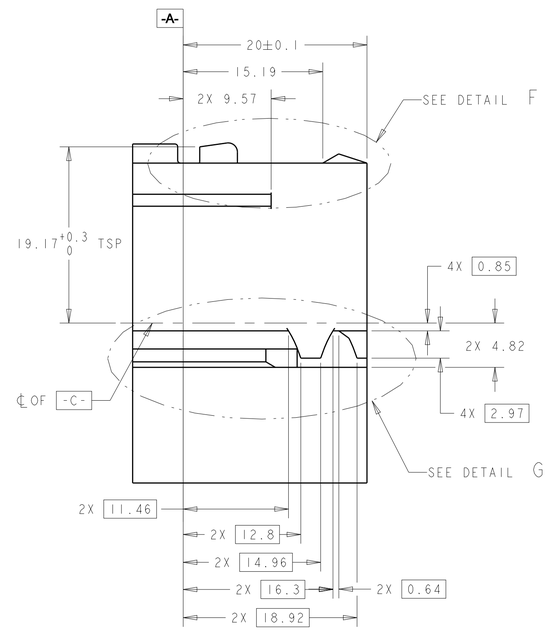

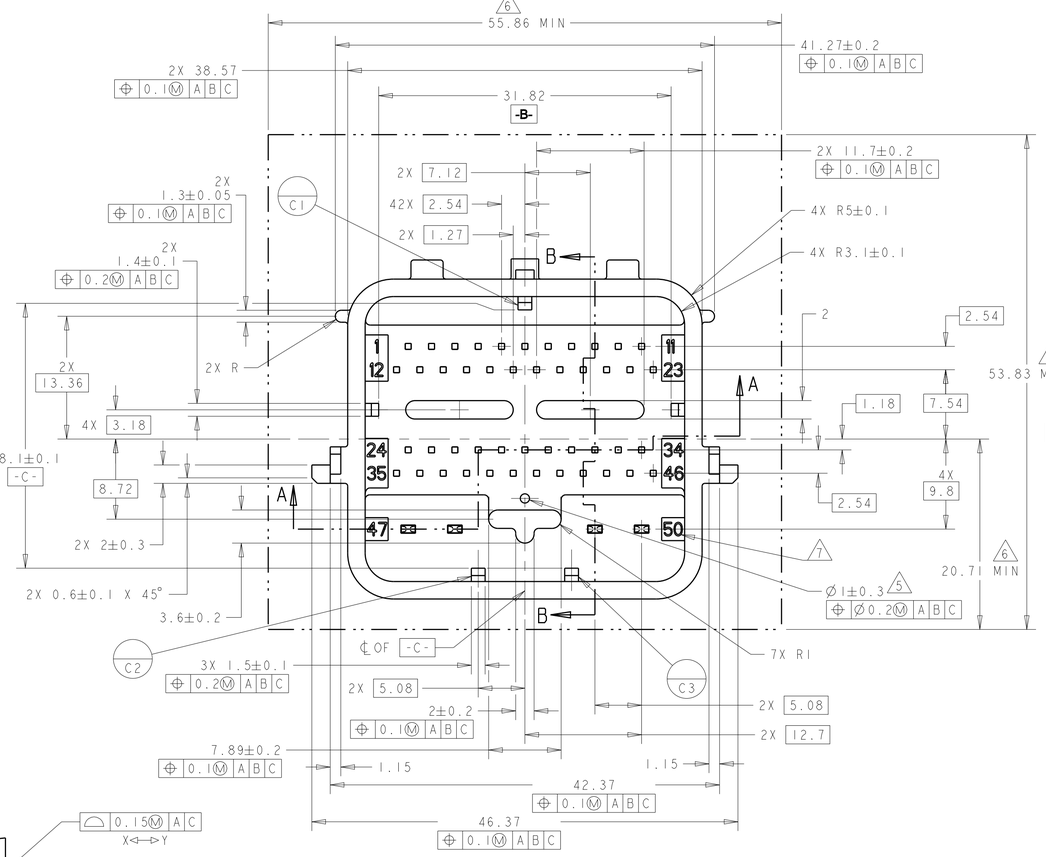

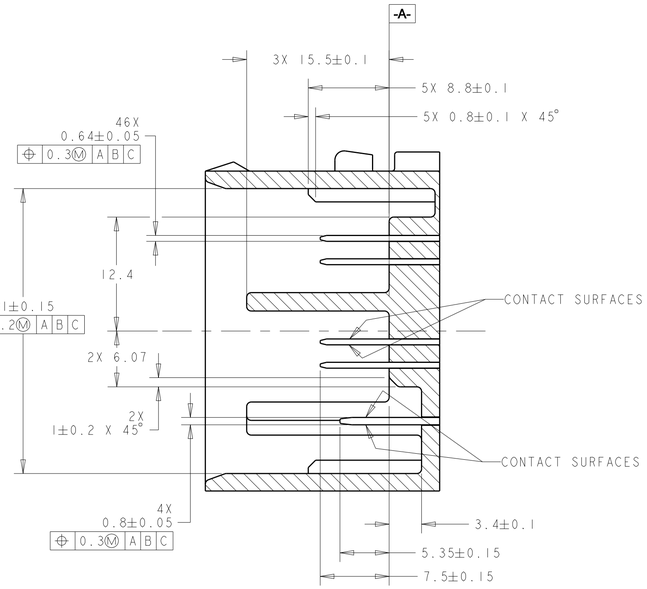

SECTION B-B

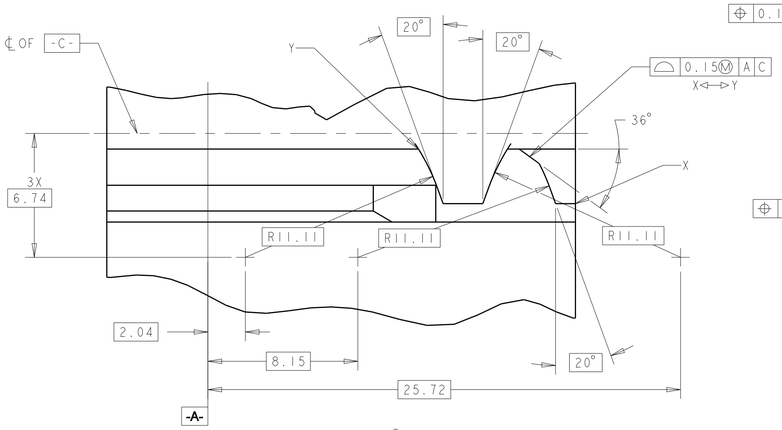

DETAIL G
SCALE 6:1
2 PLC

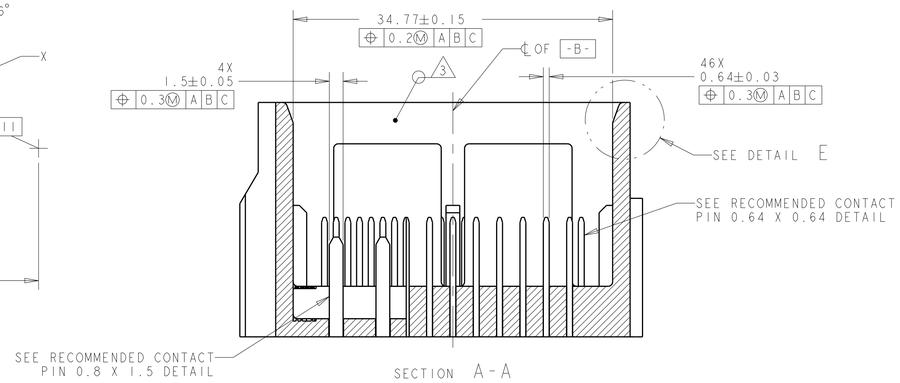

SECTION A-A

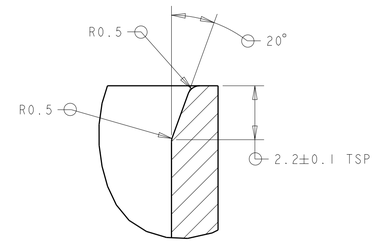

DETAIL E
SCALE 8:1

THIS DRAWING IS A CONTROLLED DOCUMENT.	DWN B. CRISAMORE 21JUL2004	TE Connectivity	
DIMENSIONS: mm	CHK M. HITCHCOCK 21JUL2004	NAME ASSEMBLY, 50-WAY, KEY A, PCM HARNESS	
TOLERANCES UNLESS OTHERWISE SPECIFIED: 0 PLC ±- ; 1 PLC ±0.3 ; 2 PLC ±0.10 ; 3 PLC ±- ; 4 PLC ±- ; ANGLES ±1°	APVD C. MARTIN 21JUL2004	PRODUCT SPEC -	
		APPLICATION SPEC -	SIZE A1 · CAGE CODE 00779 · DRAWING NO C-1438691 · RESTRICTED TO -
MATERIAL - -	FINISH - -	WEIGHT -	
		Customer Drawing	SCALE 2:1 · SHEET 2 OF 4 · REV A16

4805 (3/13)

THIS DRAWING IS UNPUBLISHED. RELEASED FOR PUBLICATION 20
© COPYRIGHT 20 BY - ALL RIGHTS RESERVED.

REVISIONS

P	LTR	DESCRIPTION	DATE	DWN	APVD
	-	SEE SHEET 1	-	-	-

KEYING OPTION A

	50	49	48	47	46	45	44	43	42	41	40	39	38	37	36	35	34	33	32	31	30	29	28	27	26	25	24	23	22	21	20	19	18	17	16	15	14	13	12	11	10	9	8	7	6	5	4	3	2	1	ASSEMBLY PART NUMBER
					46	45	44	43		41		39	38	37	36	35		33	32	31		29	28					23	22	21		19	18				13						6	5					6-1438691-8
					46			43		41		39	38	37	36	35		33	32	31		29	28					23	22	21		19	18				13						6	5					6-1438691-7
					46	45	44	43		41		39	38	37	36	35		33	32	31		29	28					23	22	21		19	18				13						6	5		3	2		6-1438691-6
					46			43		41		39	38	37	36	35		33	32	31		29	28					23	22	21		19	18				13						6	5		3	2		6-1438691-5
					46	45	44	43		41	40	39	38	37	36	35		33	32	31		29	28					23	22	21		19	18				13							5					6-1438691-4
					46	45	44	43		41	40	39	38	37	36	35		33	32	31		29	28					23	22	21		19	18				13							5		3	2		6-1438691-3
					46	45	44	43			40	39		37	36	35		33	32	31		29	28					23	22	21		19	18				13							5		3	2		6-1438691-2
					46	45	44	43		41	40	39	38	37	36	35		33	32	31		29	28					23	22	21		19	18				13						6	5					6-1438691-1
					46			43		41	40	39	38	37	36	35		33	32	31		29	28					23	22	21		19	18				13						6	5					6-1438691-0
					46			43	42	41	40	39	38	37	36	35		33	32			29	28					23	22	21		19	18	17			13						6	5	4				5-1438691-9
					46		44	43	42	41	40	39	38	37	36	35		33	32			29	28					23	22	21		19	18	17			13							5	4	3	2		5-1438691-8
					46	45	44	43	42	41	40	39	38	37	36	35		33	32			29	28					23	22	21		19	18	17			13						6	5	4				5-1438691-7
					46	45	44	43	42		40	39		37		35		33	32									23	22	21		19		17										5	4	3	2		5-1438691-6
			48	47	46	45	44	43	42	41	40	39	38	37		35		33	32									23	22	21		19	18	17			13						6	5	4	3	2		5-1438691-5
					46	45	44	43	42	41	40	39	38	37		35			32									23	22	21		19		17										5	4	3	2		5-1438691-4
					46	45	44	43	42	41	40	39	38	37		35		33	32									23	22	21		19		17			13							5	4				5-1438691-3
					46	45	44	43	42	41		39	38	37	36	35		33	32			29	28					23	22	21		19	18	17										5	4	3	2		5-1438691-2
					46	45	44	43	42	41		39	38	37	36	35		33	32			29	28					23	22	21		19	18	17			13							5	4	3	2		5-1438691-1
					46		44	43	42	41		39	38	37	36	35		33	32			29	28					23	22	21		19	18	17			13							5	4	3	2		5-1438691-0
			48	47	46	45	44	43	42	41		39	38	37		35		33	32									23	22	21		19	18	17									6	5	4	3	2		4-1438691-9
			48	47	46	45	44	43	42	41		39	38	37		35			32									23	22	21		19	18	17									6	5	4	3	2		4-1438691-8
					46	45	44	43	42	41	40	39	38	37		35		33	32									23	22	21		19		17										5	4	3	2		4-1438691-7
					46	45	44	43	42	41	40	39	38	37	36	35		33	32									23	22	21		19		17			13							5	4	3	2		4-1438691-6
			48	47	46	45	44	43	42	41		39	38	37		35		33	32									23	22	21		19	18	17									6	5	4	3	2		4-1438691-5
			48	47	46	45	44	43	42	41		39	38	37		35			32									23	22	21		19	18	17									6	5	4	3	2		4-1438691-4
			48	47	46	45	44	43	42	41		39	38	37	36	35			32									23	22	21		19	18	17			13						6	5	4	3	2		4-1438691-3
			48	47	46	45	44	43	42	41	40	39	38	37	36	35		33	32									23	22	21		19	18	17			13						6	5	4				4-1438691-2
			48	47	46	45	44	43	42	41		39	38	37	36	35		33	32									23	22	21		19	18	17			13						6	5	4				4-1438691-1
					46			43		41		39	38	37	36	35		33	32	31		29	28					23	22	21		19	18				13						6		4		2		4-1438691-0
					46	45	44	43		41		39	38	37	36	35		33	32	31		29	28					23	22	21		19	18				13						6		4				3-1438691-9
					46			43		41		39	38	37	36	35		33	32	31		29	28					23	22	21		19	18				13						6		4				3-1438691-8
					46	45	44	43		41	40	39	38	37	36	35		33	32	31		29	28					23	22	21		19	18				13								4				3-1438691-7
					46	45	44	43		41	40	39	38	37	36	35		33	32	31		29	28					23	22	21		19	18				13								4		2		3-1438691-6
					46	45	44	43		41		39	38	37	36	35		33	32	31		29	28					23	22	21		19	18				13						6		4		2		3-1438691-5
					46	45	44	43	42	41	40	39	38	37	36	35		33	32			29	28					23	22	21		19	18	17			13							5	4	3	2		3-1438691-4
					46			43	42	41		39	38	37	36	35		33	32			29	28					23	22	21		19	18	17			13						6	5	4				3-1438691-3
					46			43	42	41		39	38	37	36	35		33	32			29	28					23	22	21		19	18	17			13						6	5	4	3	2		3-1438691-2
					46	45	44	43	42	41		39	38	37	36	35		33	32			29	28					23	22	21		19	18	17			13						6	5	4	3	2		3-1438691-1
					46	45	44	43			40	39		37	36	35		33	32	31		29	28					23	22	21		19	18				13								4		2		3-1438691-0
					46	45	44	43	42		40	39	38	37	36	35		33	32			29	28					23	22	21		19	18	17			13							5	4	3	2		2-1438691-9
					46	45	44	43			40	39		37	36	35		33	32	31		29	28					23	22	21		19	18				13								4		2	1	2-1438691-8
					46	45	44	43	42			39		37	36	35		33	32									23	22	21			18	17			13							5	4				2-1438691-7
					46	45	44	43	42		40	39		37		35	34	33	32									23	22	21		19		17										5	4	3	2		2-1438691-6
					46	45	44	43	42	41	40	39	38	37	36	35	34	33	32									23	22	21		19		17			13							5	4	3	2		2-1438691-5
					46	45	44	43	42	41	40	39	38	37		35	34	33	32									23	22	21		19		17										5	4	3	2		2-1438691-4
					46	45	44	43	42	41	40	39	38	37		35	34		32									23	22	21		19		17										5	4	3	2		2-1438691-3
					46	45	44	43	42	41	40	39	38	37	36	35			32									23	22	21		19		17			13							5	4				2-1438691-2
					46	45	44	43	42	41	40	39	38	37	36	35	34		32									23	22	21		19		17			13							5	4	3	2		2-1438691-1
			48	47	46	45	44	43	42	41		39	38	37		35	34	33	32									23	22	21		19	18	17									6	5	4	3	2		2-1438691-0
			48	47	46	45	44	43	42	41		39	38	37		35	34		32									23	22	21		19	18	17									6	5	4	3	2		1-1438691-9
			48	47	46	45	44	43	42	41	40	39	38	37	36	35	34		32									23	22	21		19	18	17			13						6	5	4	3	2		1-1438691-8
			48	47	46	45	44	43	42	41	40	39	38	37	36	35			32									23	22	21		19	18	17			13						6	5	4				1-1438691-7
			48	47	46	45	44	43	42	41	40	39	38	37	36	35		33	32			29	28					23	22	21		19	18	17			13						6	5	4				1438691-8
			48	47	46	45	44	43	42	41	40	39	38	37	36	35	34	33	32			29	28					23	22	21		19	18	17			13						6	5	4	3	2		1438691-7
					46	45	44	43	42	41	40	39	38	37	36	35	34	33	32			29	28					23	22	21		19	18	17			13							5	4	3	2		1438691-6
					46	45	44	43	42	41		39	38	37	36	35		33	32			29	28					23	22	21		19	18	17			13						6	5	4				1438691-5
CAVITIES WITH A NUMERIC SYMBOL INDICATES CLOSED TERMINAL LOCATIONS					46	45	44	43	42	41		39	38	37	36	35	34	33	32			29	28					23	22	21		19	18	17			13						6	5	4	3	2		1438691-4
					46	45	44	43	42		40	39		37	36	35	34	33	32			29	28					23	22	21		19	18	17			13							5	4	3	2		1438691-3
BLANK CAVITIES INDICATES OPEN TERMINAL HOLE LOCATIONS					46	45	44	43	42	41	40	39	38	37	36	35		33	32			29	28					23	22	21		19	18	17			13							5	4				1438691-2
																																																			1438691-1

PIN-OUT CHART

THIS DRAWING IS A CONTROLLED DOCUMENT.

DIMENSIONS: mm

TOLERANCES UNLESS OTHERWISE SPECIFIED:
0 PLC ±-
1 PLC ±0.3
2 PLC ±0.10
3 PLC ±-
4 PLC ±-
ANGLES ±1°

MATERIAL - -

FINISH - -

DWN B. CRISAMORE 21JUL2004
CHK M. HITCHCOCK 21JUL2004
APVD C. MARTIN 21JUL2004

PRODUCT SPEC -
APPLICATION SPEC -
WEIGHT -

TE Connectivity

NAME ASSEMBLY, 50-WAY, KEY A, PCM HARNESS

SIZE	CAGE CODE	DRAWING NO	RESTRICTED TO
A1	00779	C-1438691	-

Customer Drawing

SCALE	SHEET	OF	REV
2:1	3	4	A16

THIS DRAWING IS UNPUBLISHED. RELEASED FOR PUBLICATION 20
© COPYRIGHT 20 BY - ALL RIGHTS RESERVED.

REVISIONS

P	LTR	DESCRIPTION	DATE	DWN	APVD
	-	SEE SHEET 1	-	-	-

KEYING OPTION A

	50	49	48	47	46	45	44	43	42	41	40	39	38	37	36	35	34	33	32	31	30	29	28	27	26	25	24	23	22	21	20	19	18	17	16	15	14	13	12	11	10	9	8	7	6	5	4	3	2	1	ASSEMBLY PART NUMBER
					46	45	44	43	42	41		39	38	37	36	35		33	32									23	22	21		19	18	17				13							6	5	4	3	2		9-1438691-8
					46	45	44	43		41	40	39	38	37	36				32	31								23	22	21	20	19		17		15		13								5	4	3	2		9-1438691-7
					46	45	44	43		41		39	38	37	36			33	32														18					13								5		3	2		9-1438691-6
				47	46	45	44	43		41	40	39	38	37	36			33	32																			13								5		3	2		9-1438691-5
				47	46	45	44	43			40	39		37	36			33	32																			13								5		3	2		9-1438691-4
					46	45	44	43	42	41		39	38	37	36			33	32									23	22	21	20		18					13								5	4	3	2		9-1438691-3
			48	47	46	45	44	43	42	41		39	38	37	36			33	32									23	22	21	20		18					13								5	4	3	2		9-1438691-2
					46	45	44	43	42	41	40	39	38	37	36			33	32									23	22	21	20		18					13								5	4	3	2		9-1438691-1
			48	47	46	45	44	43	42	41	40	39	38	37	36			33	32									23	22	21	20		18					13								5	4	3	2		9-1438691-0
				47	46	45	44	43			40	39		37	36			33	32									23	22	21	20							13								5		3	2		8-1438691-9
				47	46	45	44	43		41	40	39	38	37	36			33	32									23	22	21	20							13								5		3	2		8-1438691-8
					46	45	44	43		41		39	38	37	36			33	32									23	22	21	20		18					13								5		3	2		8-1438691-7
			48	47	46	45	44	43		41		39	38	37	36			33	32									23	22	21	20		18					13								5		3	2		8-1438691-6
			48	47	46	45	44	43	42	41		39	38	37	36	35	34	33	32			29	28					23	22	21		19	18	17				13						6	5	4	3	2		8-1438691-5
			48	47	46	45	44	43	42	41		39	38	37	36	35		33	32			29	28					23	22	21		19	18	17				13						6	5	4				8-1438691-4
					46	45	44	43	42	41		39	38	37		35		33	32									23	22	21		19	18	17										6	5	4	3	2		8-1438691-3
					46	45	44	43	42	41		39	38	37		35			32									23	22	21		19	18	17										6	5	4	3	2		8-1438691-2
					46	45	44	43	42	41		39	38	37	36	35			32									23	22	21		19	18	17				13						6	5	4	3	2		8-1438691-1
					46	45	44	43	42	41	40	39	38	37	36	35		33	32									23	22	21		19	18	17				13						6	5	4				8-1438691-0
					46	45	44	43	42	41		39	38	37	36	35		33	32									23	22	21		19	18	17				13						6	5	4				7-1438691-9
					46	45	44	43	42	41	40	39	38	37	36	35		33	32			29	28					23	22	21		19	18	17				13						6	5	4	3	2		7-1438691-8
					46			43	42	41	40	39	38	37	36	35		33	32			29	28					23	22	21		19	18	17				13						6	5	4	3	2		7-1438691-7
					46	45	44	43		41	40	39	38	37	36	35		33	32	31		29	28					23	22	21		19	18					13						6	5		3	2		7-1438691-6
					46			43		41	40	39	38	37	36	35		33	32	31		29	28					23	22	21		19	18					13						6	5		3	2		7-1438691-5
					46	45	44	43	42	41	40	39	38	37	36	35	34	33	32	31		29	28					23	22	21	20	19	18	17	16		14	13	12	11				6	5	4	3	2		7-1438691-4
						45	44	43	42	41	40	39	38	37		35	34	33	32	31								23	22	21	20	19	18							11		9		7	6		4	3	2	1	7-1438691-3
CAVITIES WITH A NUMERIC SYMBOL INDICATES CLOSED TERMINAL LOCATIONS						45		43	42	41	40	39	38	37		35	34	33	32	31								23	22	21	20	19	18							11		9		7	6		4	3	2	1	7-1438691-2
						45	44	43	42	41	40	39	38	37	36	35	34	33	32	31								23	22	21	20	19	18							11		9		7	6		4	3	2	1	7-1438691-1
BLANK CAVITIES INDICATES OPEN TERMINAL HOLE LOCATIONS						45		43	42	41	40	39	38	37		35	34	33	32	31								23	22	21	20	19	18	17	16					11		9		7	6		4	3	2	1	7-1438691-0
						45	44	43	42	41	40	39	38	37	36	35	34	33	32	31								23	22	21	20	19	18	17	16					11		9		7	6		4	3	2	1	6-1438691-9
TERMINAL HOLE POSITION	50	49	48	47	46	45	44	43	42	41	40	39	38	37	36	35	34	33	32	31	30	29	28	27	26	25	24	23	22	21	20	19	18	17	16	15	14	13	12	11	10	9	8	7	6	5	4	3	2	1	

PIN-OUT CHART

THIS DRAWING IS A CONTROLLED DOCUMENT.

DIMENSIONS: mm

TOLERANCES UNLESS OTHERWISE SPECIFIED:
0 PLC ±-
1 PLC ±0.3
2 PLC ±0.10
3 PLC ±-
4 PLC ±-
ANGLES ±1°

MATERIAL - -

FINISH - -

DWN B. CRISAMORE 21JUL2004
CHK M. HITCHCOCK 21JUL2004
APVD C. MARTIN 21JUL2004

PRODUCT SPEC -
APPLICATION SPEC -
WEIGHT -

TE Connectivity

NAME ASSEMBLY, 50-WAY, KEY A, PCM HARNESS

SIZE A1 | CAGE CODE 00779 | DRAWING NO C-1438691 | RESTRICTED TO -

Customer Drawing | SCALE 2:1 | SHEET 4 OF 4 | REV A16

4805 (3/13)

Общество с ограниченной ответственностью «МосЧип» ИНН 7719860671 / КПП 771901001
Адрес: 105318, г.Москва, ул.Щербаковская д.3, офис 1107

Данный компонент на территории Российской Федерации

Вы можете приобрести в компании MosChip.

Для оперативного оформления запроса Вам необходимо перейти по данной ссылке:

http://moschip.ru/get-element

Вы можете разместить у нас заказ для любого Вашего проекта, будь то серийное производство или разработка единичного прибора.

В нашем ассортименте представлены ведущие мировые производители активных и пассивных электронных компонентов.

Нашей специализацией является поставка электронной компонентной базы двойного назначения, продукции таких производителей как XILINX, Intel (ex.ALTERA), Vicor, Microchip, Texas Instruments, Analog Devices, Mini-Circuits, Amphenol, Glenair.

Сотрудничество с глобальными дистрибьюторами электронных компонентов, предоставляет возможность заказывать и получать с международных складов практически любой перечень компонентов в оптимальные для Вас сроки.

На всех этапах разработки и производства наши партнеры могут получить квалифицированную поддержку опытных инженеров.

Система менеджмента качества компании отвечает требованиям в соответствии с ГОСТ Р ИСО 9001, ГОСТ РВ 0015-002 и ЭС РД 009

Офис по работе с юридическими лицами:

105318, г.Москва, ул.Щербаковская д.3, офис 1107, 1118, ДЦ «Щербаковский»

Телефон: +7 495 668-12-70 (многоканальный)

Факс: +7 495 668-12-70 (доб.304)

E-mail: info@moschip.ru

Skype отдела продаж:
moschip.ru
moschip.ru_4
moschip.ru_6
moschip.ru_9