SYMBOL DEFINITION			MISSING SYMBOLS
A DIMENSION WITHOUT AN INSPECTION REPORT SYMBOL ⬭ DOES NOT REQUIRE INSPECTION. IT MAY BE CONTROLLED ON THE INDIVIDUAL COMPONENT DRAWING.	TOTAL NO OF INSPECTIONS REQUIRED	33	NO MISSING SYMBOL NUMBER
	LAST NO. USED	28	

DWG STATUS DATE	STG	REV	N/P	CHG	ZONE	REVISION HISTORY	AUTH	DR	APVD 1	APVD 2
16FE15	R	01	-	-		WAS PE246895 AND RELEASED PART DRAWING	428879	AHG	AHG	RP

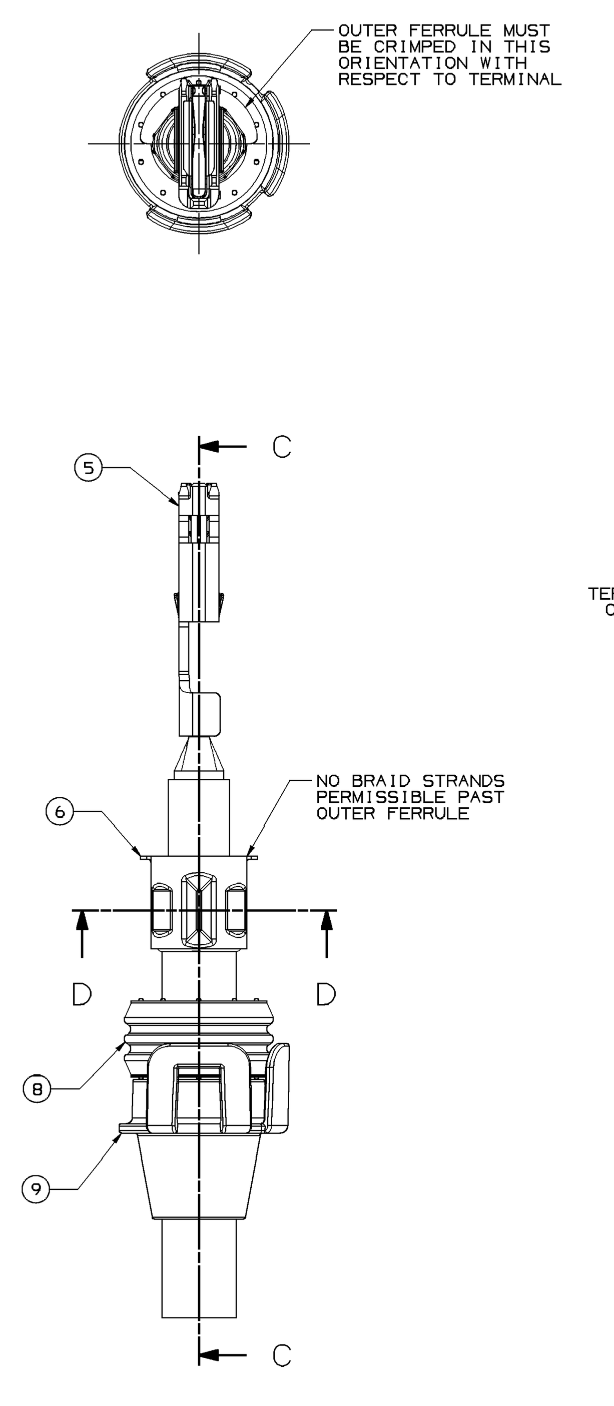

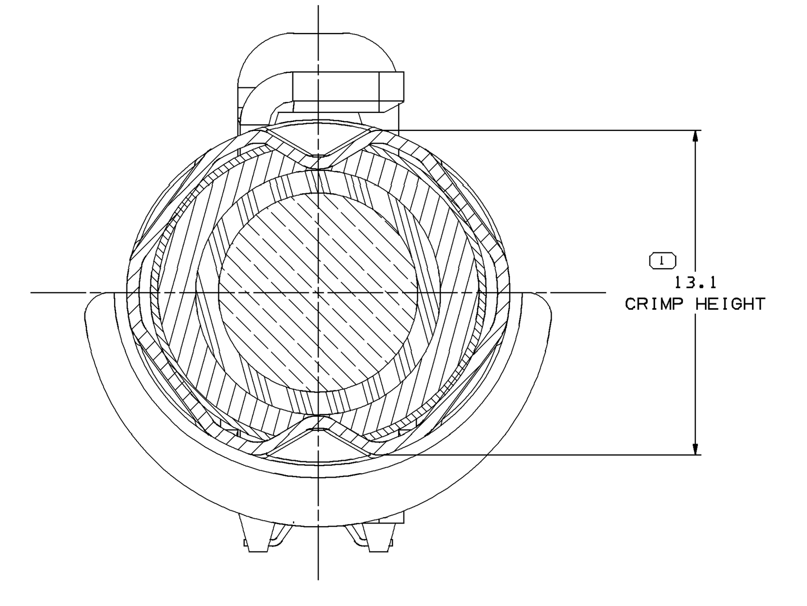

SECTION D-D
SCALE 8:1

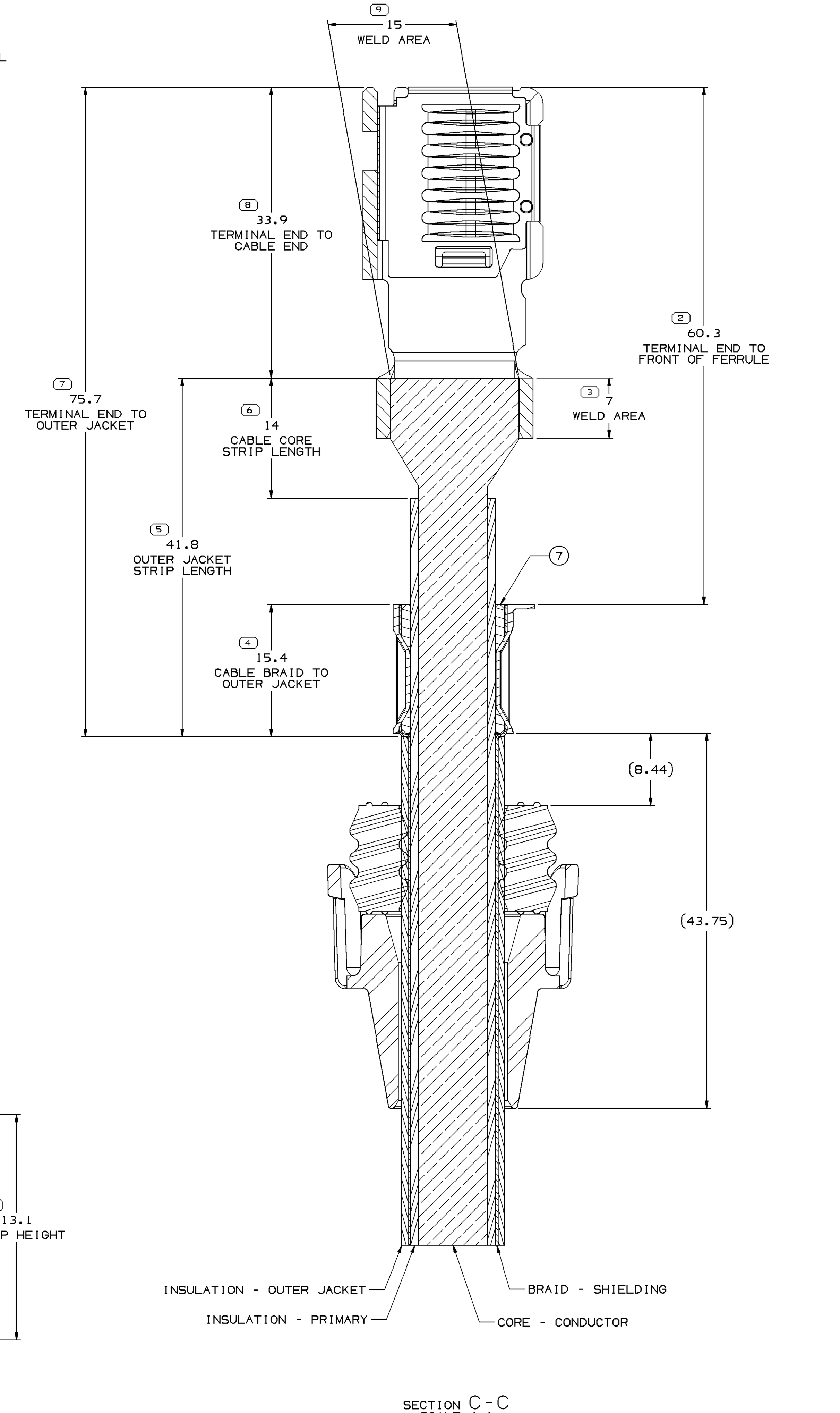

SECTION C-C
SCALE 4:1

NOTE:

1. THE ASSEMBLY SHOWN ON THIS DRAWING REQUIRES THE USE OF 35MM² HIGH VOLTAGE SHIELDED CABLE PER M6040. FERRULES MUST BE CRIMPED AND ORIENTATED WITH RESPECT TO THE TERMINAL AS SHOWN & MEET PULL REQUIREMENTS OF USCAR 37
2. CABLE MUST BE INSERTED THROUGH THE SEAL RETAINER (9) AND CABLE SEAL (8) BEFORE APPLICATION OF INNER (7) AND OUTER (6) FERRULES AND BEFORE APPLICATION OF TERMINAL ASM (5).
3. CABLE MUST BE PARTIALLY STRIPPED AND NO CORE STRANDS OR BRAID STRANDS ARE TO BE EXPOSED WHEN APPLYING THE SEAL RETAINER (9) AND CABLE SEAL (8).
4. ALL LEADS MUST BE HI-POT TESTED TO 3000 VOLTS (AC RMS) FOR 10 SECONDS.
5. CABLE ASSEMBLY MUST BE VALIDATED TO CUSTOMER REQUIREMENTS FOR THE APPLICATION.

CABLE ASSEMBLY
35MM² HV SHIELDED CABLE PER M6040

ITEM	PART NO	QTY	DESCRIPTION
9	13832568	1	SEAL RETAINER
8	13832566	1	CABLE SEAL
7	13832560	1	INNER FERRULE
6	15534994	1	OUTER FERRULE
5	13801592	1	RIGHT ANGLE TERMINAL

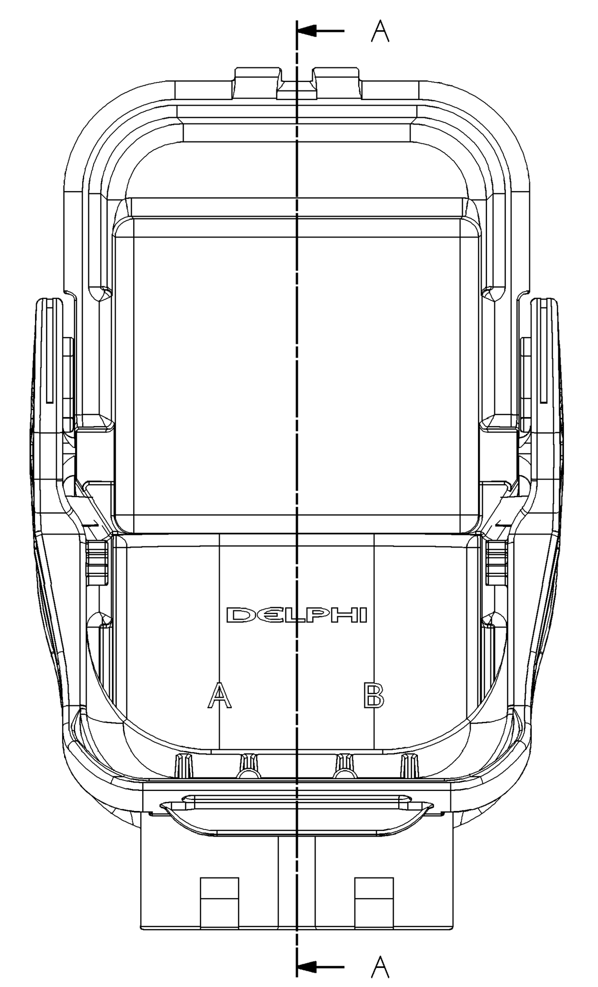

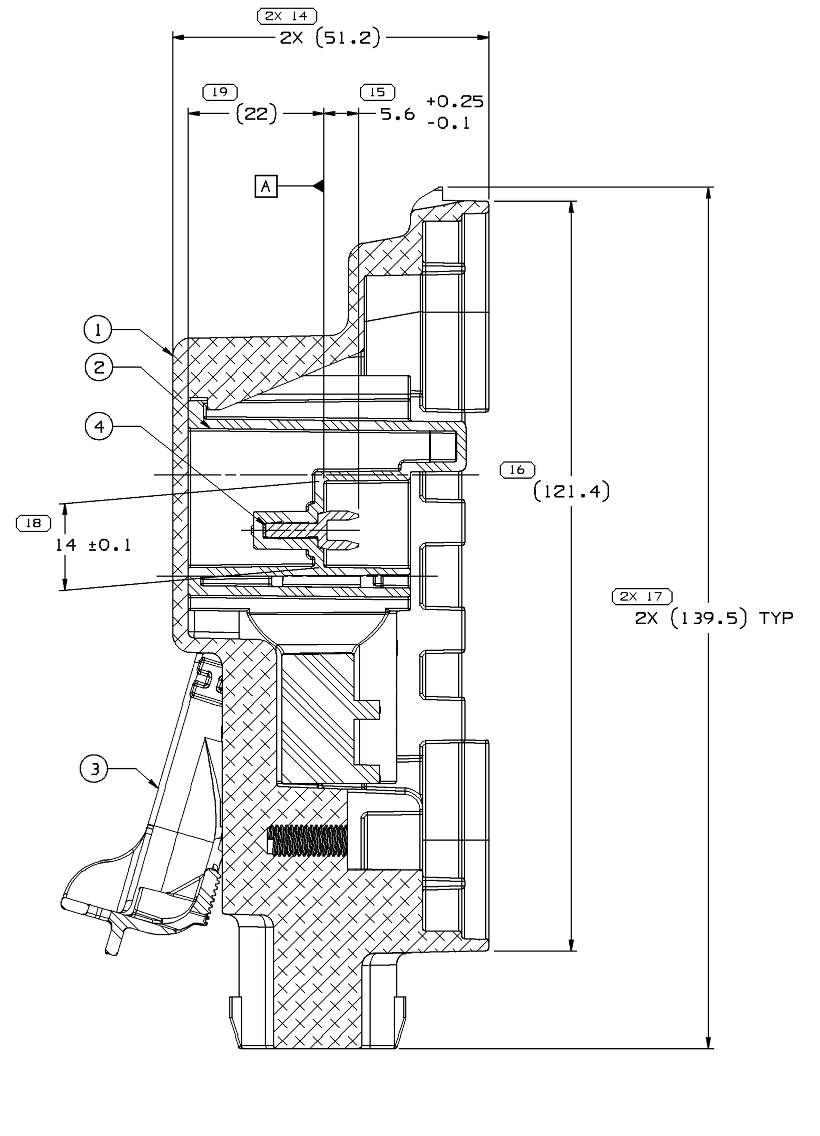

SECTION A-A

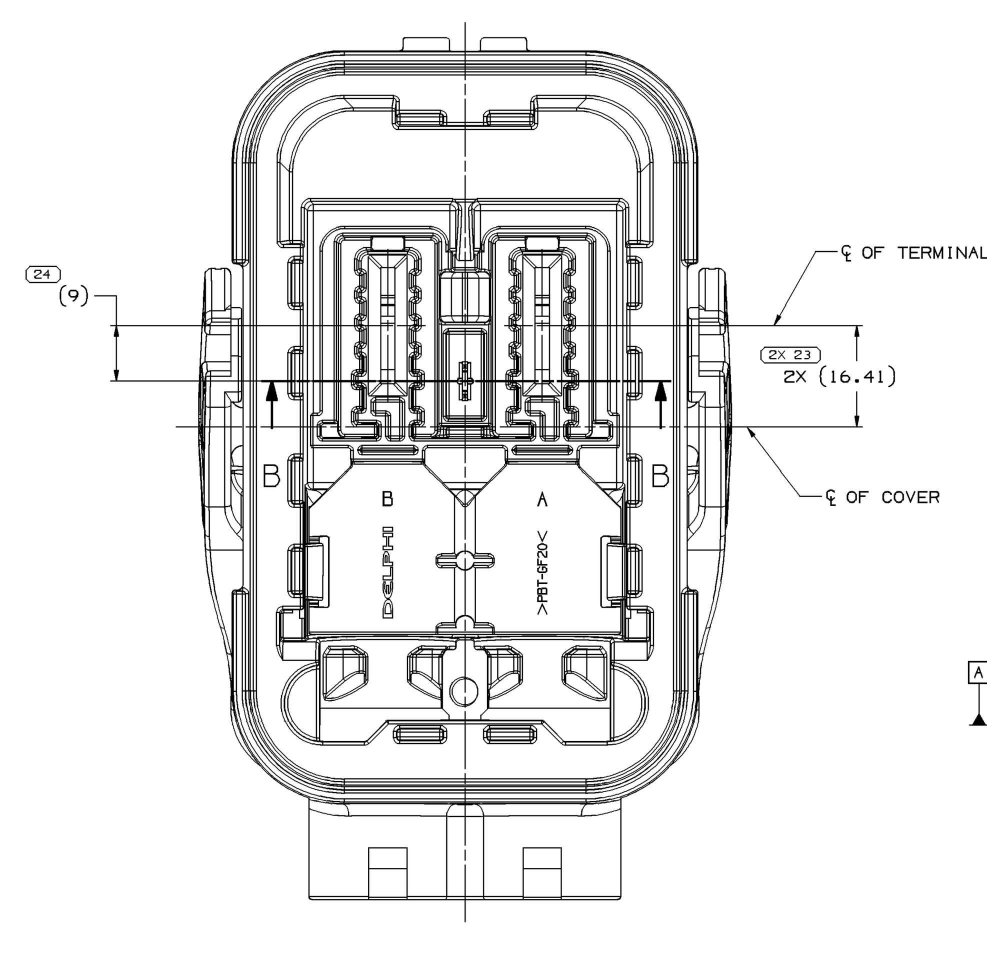

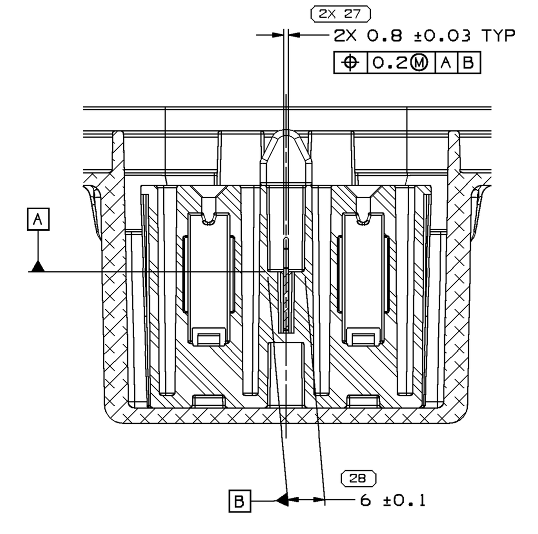

SECTION B-B

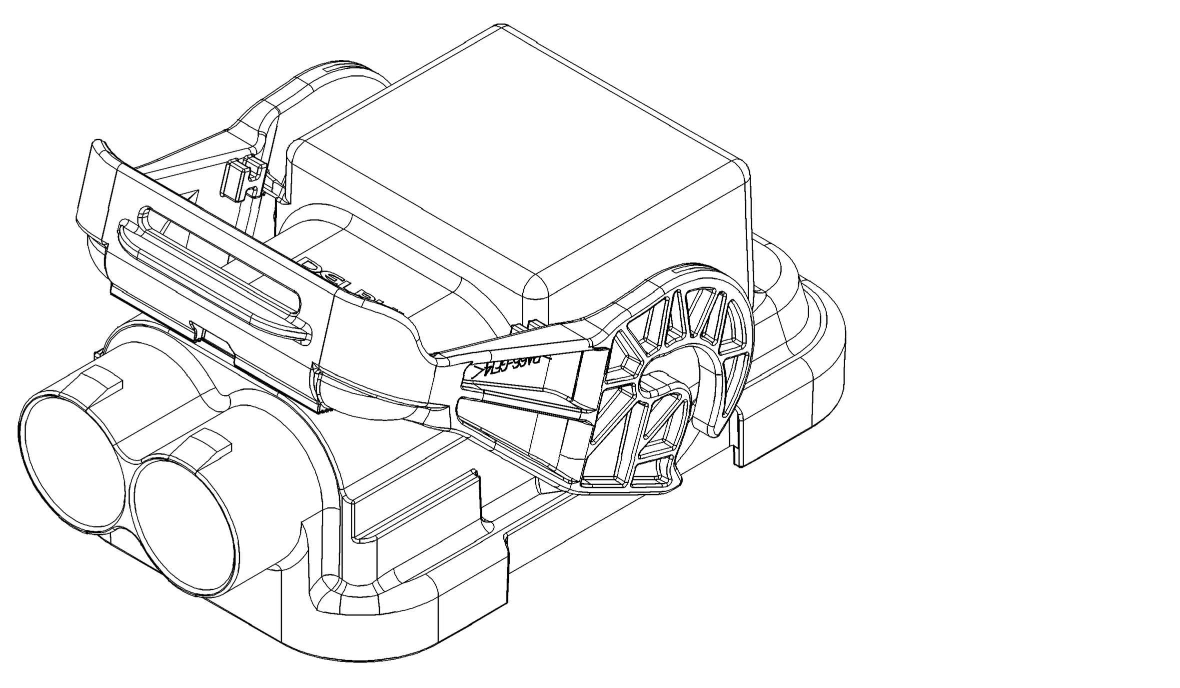

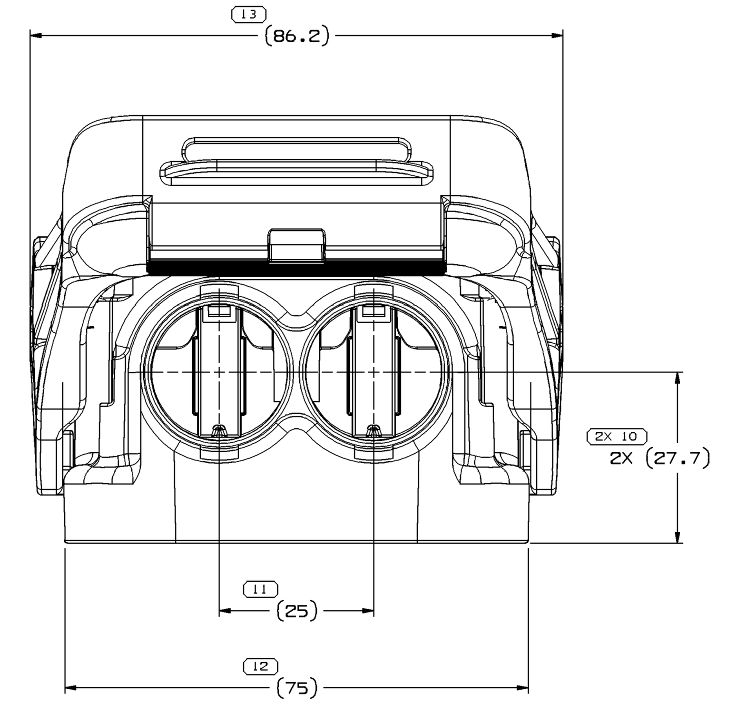

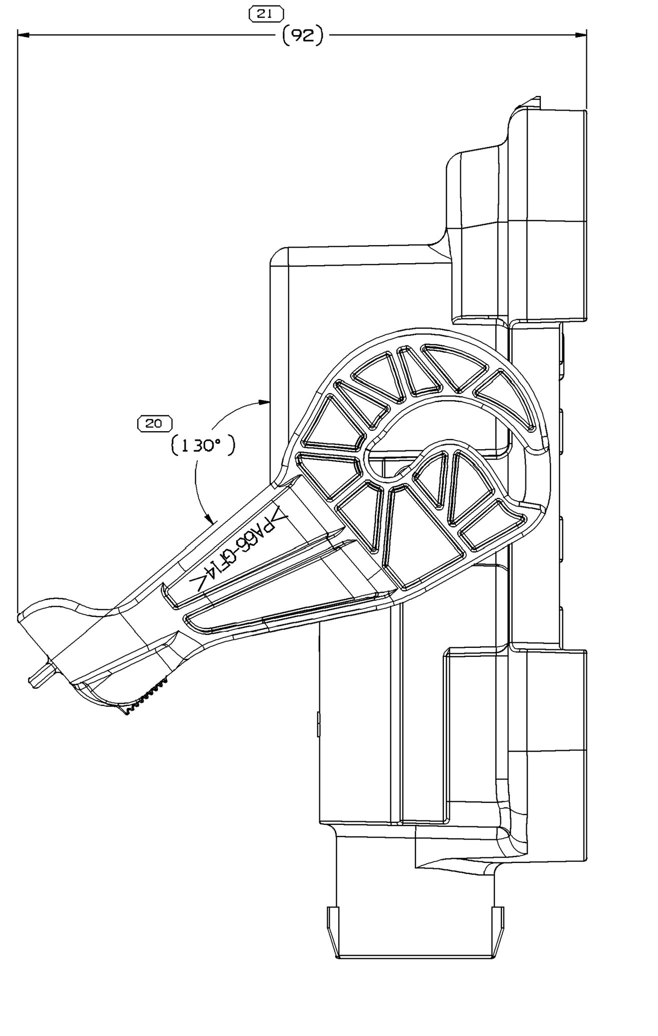

LEVER LOCK PRESTAGE POSITION

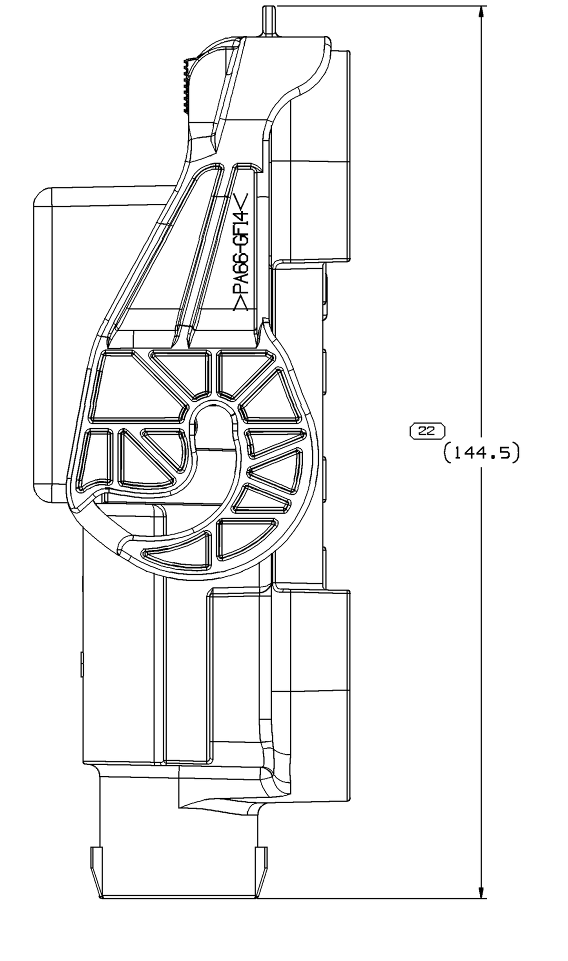

LEVER LOCK MATED POSITION

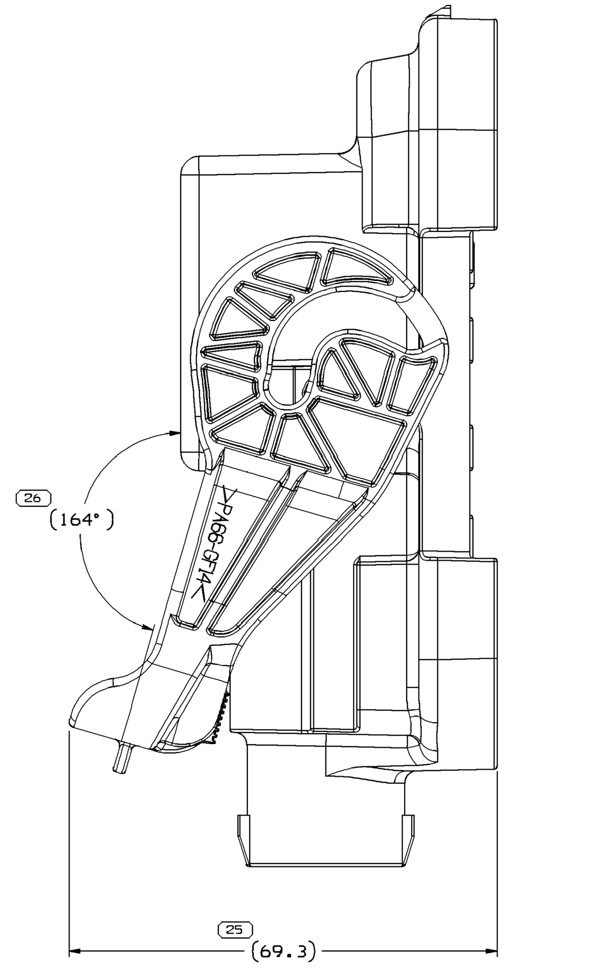

LEVER LOCK SHIPPING POSITION

ITEM	PART NO	QTY	DESCRIPTION
4	13824777	1	TERM SHUNT
3	13985587	1	LOCK MECH ASST LEVER
2	13956875	1	LOCK INRCONNECT
1	15522427	1	COV CONN PWR PACK

DRAWING NUMBER 15503140						
SIZE	SCALE	FRAME NO	SHEET NO	STG	REV	N/P
A1x4	2:1	2 OF 2	1 OF 1	R	01	-

NOTES

1. UNLESS OTHERWISE SPECIFIED AND/OR INDICATED:

   DIMENSIONS ARE TO FACE OF VIEW SHOWN AND AUTOMATICALLY ROUNDED BY COMPUTER FOR INSPECTION (SEE MATH MODEL FOR PRECISE DIMENSIONS). FOR ALL OTHER DIMENSIONS NOT SHOWN BUT REQUIRED FOR TOOL BUILD, SEE MATH MODEL FOR PRECISE TOOL PATH DATA.

2. THIS ASSEMBLY ACCEPTS 35MM² HIGH VOLTAGE CABLE PER M6040 SPECIFICATION.
3. FOR APPLICATION DATA SEE THE APPLICATION DRAWING.
4. CONNECTION MEETS USCAR 37 (REV 5) PARAGRAPH 5.1.4 T3, V2, S3, M1, (GM3191 V5).
5. CONNECTION MEETS DIELECTRIC WITHSTAND VOLTAGE RATING OF 1000V USING THE USCAR 37 (REV 5) PARAGRAPH 5.5.2 TEST METHOD.
6. SHORTEST NOMINAL CREEPAGE PATH POWER TERMINAL TO POWER TERMINAL PER IEC 60664 FOR THE MATED CONNECTION SYSTEM ON CABLE IS 26.65MM. OTHER SHORTEST NOMINAL CREEPAGE PATHS ARE AS FOLLOWS:
   A. 13.32MM; MATERIAL GROUP III; POWER TERMINAL TO SHIELD.
   B. 31.63MM; MATERIAL GROUP III; POWER TERMINAL TO INTERLOCK TERMINAL.
   C. 13.32MM; MATERIAL GROUP III; POWER TERMINAL TO FERRULE ALONG CABLE.

A LINE DRAWN THROUGH A PART NUMBER INDICATES THAT PHYSICAL PARTS ARE NOT AVAILABLE FOR ORDERING.

PART NUMBERS THAT DO NOT HAVE A LINE PRESENT INDICATE THAT PHYSICAL PARTS ARE AVAILABLE FOR ORDERING.

CONTACT DELPHI SALES TO ASSURE AVAILABILITY OF PARTS.

DWG TYPE: PART DRAWING

STYLE

VOLUME (CM³) | DISTR CODE: D

UNLESS OTHERWISE SPECIFIED

THIS DOCUMENT IS IN ACCORDANCE WITH ASME Y14.5M-1994 AS AMENDED BY THE GM GLOBAL DIMENSIONING AND TOLERANCING ADDENDUM-2001. SEPARATE PATTERNS OF FEATURES MAY BE GAGED SEPARATELY REGARDLESS OF DATUM REFERENCES.

ALL DIMENSIONS ARE IN MILLIMETERS

REFERENCE

PROCESS SENSITIVE DIMENSION

THIRD ANGLE PROJECTION

DO NOT SCALE

USE MATH DATA

CAD NX

DELPHI

DELPHI PACKARD ELECTRICAL/ELECTRONIC ARCHITECTURE
WARREN, OH

COPYRIGHT 2015 DELPHI CORPORATION AND/OR ITS AFFILIATES. ALL RIGHTS RESERVED.

THIS DRAWING IS THE PROPERTY OF DELPHI CORPORATION AND CONTAINS DELPHI CONFIDENTIAL INFORMATION. THE REPRODUCTION, DISTRIBUTION AND UTILIZATION OF THIS DOCUMENT OR ITS RELATED CAD MATH DATA, AS WELL AS COMMUNICATION OF ANY CONTENT TO OTHERS, WITHOUT EXPRESS AUTHORIZATION, IS PROHIBITED.

		DATE
DR		
APVD1	ARMANDO HERNANDEZ	16FE15
APVD2	ARMANDO HERNANDEZ	16FE15
APVD3	RICHARD PETROSKY	16FE15
APVD4		
APVD5		

SUBSTANCES OF CONCERN AND RECYCLED CONTENT PER DELPHI 10949001

MATERIAL: SEE DRAWINGS

DRAWING NAME: ASM CONN 2 F PWR PACK 2000 SLD MODULAR

DRAWING NUMBER 15503140						
SIZE	SCALE	FRAME NO	SHEET NO	STG	REV	N/P
A1x4	2:1	1 OF 2	1 OF 1	R	01	-

15503140

Общество с ограниченной ответственностью «МосЧип» ИНН 7719860671 / КПП 771901001
Адрес: 105318, г.Москва, ул.Щербаковская д.3, офис 1107

Данный компонент на территории Российской Федерации

Вы можете приобрести в компании MosChip.

Для оперативного оформления запроса Вам необходимо перейти по данной ссылке:

http://moschip.ru/get-element

Вы можете разместить у нас заказ для любого Вашего проекта, будь то серийное производство или разработка единичного прибора.

В нашем ассортименте представлены ведущие мировые производители активных и пассивных электронных компонентов.

Нашей специализацией является поставка электронной компонентной базы двойного назначения, продукции таких производителей как XILINX, Intel (ex.ALTERA), Vicor, Microchip, Texas Instruments, Analog Devices, Mini-Circuits, Amphenol, Glenair.

Сотрудничество с глобальными дистрибьюторами электронных компонентов, предоставляет возможность заказывать и получать с международных складов практически любой перечень компонентов в оптимальные для Вас сроки.

На всех этапах разработки и производства наши партнеры могут получить квалифицированную поддержку опытных инженеров.

Система менеджмента качества компании отвечает требованиям в соответствии с ГОСТ Р ИСО 9001, ГОСТ РВ 0015-002 и ЭС РД 009

Офис по работе с юридическими лицами:

105318, г.Москва, ул.Щербаковская д.3, офис 1107, 1118, ДЦ «Щербаковский»

Телефон: +7 495 668-12-70 (многоканальный)

Факс: +7 495 668-12-70 (доб.304)

E-mail: info@moschip.ru

Skype отдела продаж:
moschip.ru
moschip.ru_4
moschip.ru_6
moschip.ru_9