LM10 Operational Amplifier and Voltage Reference

Check for Samples: LM10

FEATURES

- **Input Offset Voltage: 2 mV (max)**
- **Input Offset Current: 0.7 nA (max)**
- **Input Bias Current: 20 nA (max)**
- **Reference Regulation: 0.1% (max)**
- **Offset Voltage Drift: 2 μV/°C**
- **Reference Drift: 0.002%/°C**

DESCRIPTION

The LM10 series are monolithic linear ICs consisting of a precision reference, an adjustable reference buffer and an independent, high quality op amp.

The unit can operate from a total supply voltage as low as 1.1V or as high as 40V, drawing only 270μA. A complementary output stage swings within 15 mV of the supply terminals or will deliver ±20 mA output current with ±0.4V saturation. Reference output can be as low as 200 mV.

The circuit is recommended for portable equipment and is completely specified for operation from a single power cell. In contrast, high output-drive capability, both voltage and current, along with thermal overload protection, suggest it in demanding general-purpose applications.

The device is capable of operating in a floating mode, independent of fixed supplies. It can function as a remote comparator, signal conditioner, SCR controller or transmitter for analog signals, delivering the processed signal on the same line used to supply power. It is also suited for operation in a wide range of voltage- and current-regulator applications, from low voltages to several hundred volts, providing greater precision than existing ICs.

This series is available in the three standard temperature ranges, with the commercial part having relaxed limits. In addition, a low-voltage specification (suffix "L") is available in the limited temperature ranges at a cost savings.

Connection and Functional Diagrams

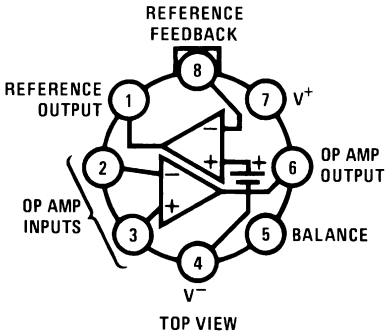

Figure 1. TO Package (NEV)
See Package Number NEV0008A

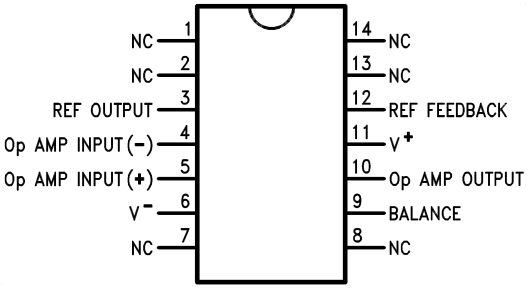

Figure 2. SOIC Package (NPA)
See Package Number NPA0014B

Please be aware that an important notice concerning availability, standard warranty, and use in critical applications of Texas Instruments semiconductor products and disclaimers thereto appears at the end of this data sheet.

All trademarks are the property of their respective owners.

PRODUCTION DATA information is current as of publication date. Products conform to specifications per the terms of the Texas Instruments standard warranty. Production processing does not necessarily include testing of all parameters.

Copyright © 1998–2013, Texas Instruments Incorporated

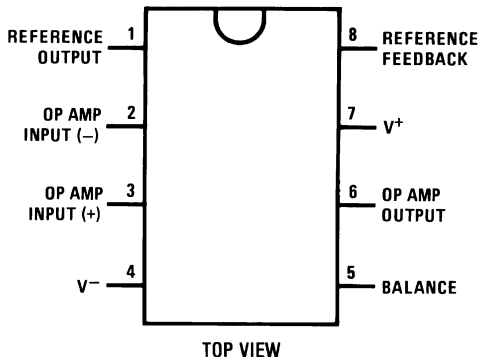

Figure 3. PDIP Package (P)
See Package Number P (R-PDIP-T8)

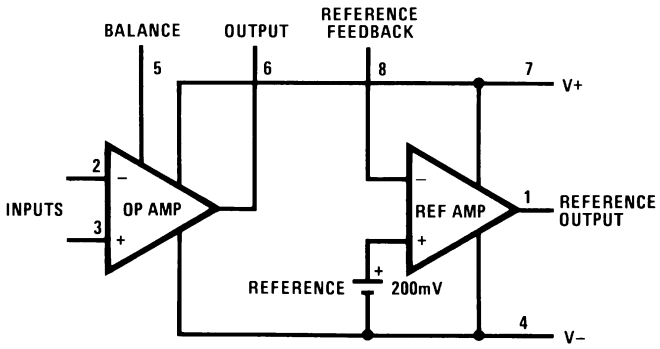

Figure 4.

These devices have limited built-in ESD protection. The leads should be shorted together or the device placed in conductive foam during storage or handling to prevent electrostatic damage to the MOS gates.

Absolute Maximum Ratings[(1)(2)(3)]

	LM10/LM10B/ LM10C	LM10BL/ LM10CL
Total Supply Voltage	45V	7V
Differential Input Voltage[(4)]	±40V	±7V
Power Dissipation[(5)]	internally limited	
Output Short-circuit Duration[(6)]	continuous	
Storage-Temp. Range	−55°C to +150°C	
Lead Temp. (Soldering, 10 seconds)		
TO	300°C	
Lead Temp. (Soldering, 10 seconds) DIP	260°C	
Vapor Phase (60 seconds)	215°C	
Infrared (15 seconds)	220°C	
ESD rating is to be determined.		
Maximum Junction Temperature		
LM10		150°C
LM10B		100°C
LM10C		85°C

(1) Refer to RETS10X for LM10H military specifications.
(2) Absolute Maximum Ratings indicate limits beyond which damage to the device may occur. Operating Ratings indicate conditions for which the device is functional, but do not ensure specific performance limits.
(3) If Military/Aerospace specified devices are required, please contact the TI Sales Office/Distributors for availability and specifications.
(4) The Input voltage can exceed the supply voltages provided that the voltage from the input to any other terminal does not exceed the maximum differential input voltage and excess dissipation is accounted for when $V_{IN}<V^-$.
(5) The maximum, operating-junction temperature is 150°C for the LM10, 100°C for the LM10B(L) and 85°C for the LM10C(L). At elevated temperatures, devices must be derated based on package thermal resistance.
(6) Internal thermal limiting prevents excessive heating that could result in sudden failure, but the IC can be subjected to accelerated stress with a shorted output and worst-case conditions.

Copyright © 1998–2013, Texas Instruments Incorporated

Operating Ratings

Package Thermal Resistance	
θ_{JA}	
NEV Package	150°C/W
P Package	87°C/W
NPA Package	90°C/W
θ_{JC}	
NEV Package	45°C/W

Electrical Characteristics

T_J=25°C, **T_{MIN}≤T_J≤T_{MAX} (Boldface type refers to limits over temperature range)**(1)

Parameter	Conditions	LM10/LM10B			LM10C			Units
		Min	Typ	Max	Min	Typ	Max	
Input offset voltage			0.3	2.0		0.5	4.0	mV
				3.0			**5.0**	mV
Input offset current(2)			0.25	0.7		0.4	2.0	nA
				1.5			**3.0**	nA
Input bias current			10	20		12	30	nA
				30			**40**	nA
Input resistance		250	500		150	400		kΩ
		150			**115**			kΩ
Large signal voltage gain	V_S=±20V, I_{OUT}=0	120	400		80	400		V/mV
	V_{OUT}=±19.95V	**80**			**50**			V/mV
	V_S=±20V, V_{OUT}=±19.4V	50	130		25	130		V/mV
	I_{OUT}=±20 mA **(±15 mA)**	**20**			**15**			V/mV
	V_S=±0.6V **(0.65V),** I_{OUT}=±2 mA	1.5	3.0		1.0	3.0		V/mV
	V_{OUT}=±0.4V **(±0.3V), V_{CM}=−0.4V**	**0.5**			**0.75**			V/mV
Shunt gain(3)	1.2V **(1.3V)** ≤V_{OUT}≤40V,	14	33		10	33		V/mV
	R_L=1.1 kΩ							
	0.1 mA≤I_{OUT}≤5 mA	**6**			**6**			V/mV
	1.5V≤V^+≤40V, R_L=250Ω	8	25		6	25		V/mV
	0.1 mA≤I_{OUT}≤20 mA	**4**			**4**			V/mV
Common-mode rejection	−20V≤V_{CM}≤19.15V **(19V)**	93	102		90	102		dB
	V_S=±20V	**87**			**87**			dB
Supply-voltage rejection	−0.2V≥V^-≥−39V	90	96		87	96		dB
	V^+=1.0V **(1.1V)**	**84**			**84**			dB
	1.0V **(1.1V)** ≤V^+≤39.8V	96	106		93	106		dB
	V^-=−0.2V	**90**			**90**			dB
Offset voltage drift			2.0			5.0		μV/°C
Offset current drift			2.0			5.0		pA/°C
Bias current drift	T_C<100°C		60			90		pA/°C
Line regulation	1.2V **(1.3V)** ≤V_S≤40V		0.001	0.003		0.001	0.008	%/V
	0≤I_{REF}≤1.0 mA, V_{REF}=200 mV			**0.006**			**0.01**	%/V

(1) These specifications apply for V^-≤V_{CM}≤V^+−0.85V **(1.0V),** 1.2V **(1.3V)** <V_S≤V_{MAX}, V_{REF}=0.2V and 0≤I_{REF}≤1.0 mA, unless otherwise specified: V_{MAX}=40V for the standard part and 6.5V for the low voltage part. Normal typeface indicates 25°C limits. **Boldface type indicates limits and altered test conditions for full-temperature-range operation;** this is −55°C to 125°C for the LM10, −25°C to 85°C for the LM10B(L) and 0°C to 70°C for the LM10C(L). The specifications do not include the effects of thermal gradients (τ_1=20 ms), die heating (τ_2=0.2s) or package heating. Gradient effects are small and tend to offset the electrical error (see curves).
(2) For T_J>90°C, I_{OS} may exceed 1.5 nA for V_{CM}=V^-. With T_J=125°C and V^-≤V_{CM}≤V^-+0.1V, I_{OS}≤5 nA.
(3) This defines operation in floating applications such as the bootstrapped regulator or two-wire transmitter. Output is connected to the V^+ terminal of the IC and input common mode is referred to V^- (see Typical Applications). Effect of larger output-voltage swings with higher load resistance can be accounted for by adding the positive-supply rejection error.

Copyright © 1998–2013, Texas Instruments Incorporated

Electrical Characteristics (continued)

T_J=25°C, **T_{MIN}≤T_J≤T_{MAX} (Boldface type refers to limits over temperature range)**(1)

Parameter	Conditions	LM10/LM10B			LM10C			Units
		Min	Typ	Max	Min	Typ	Max	
Load regulation	0≤I_{REF}≤1.0 mA		0.01	0.1		0.01	0.15	%
	V^+−V_{REF}≥1.0V **(1.1V)**			**0.15**			**0.2**	%
Amplifier gain	0.2V≤V_{REF}≤35V	50	75		25	70		V/mV
		23			**15**			V/mV
Feedback sense voltage		195	200	205	190	200	210	mV
		194		**206**	**189**		**211**	mV
Feedback current			20	50		22	75	nA
				65			**90**	nA
Reference drift			0.002			0.003		%/°C
Supply current			270	400		300	500	µA
				500			**570**	µA
Supply current change	1.2V **(1.3V)** ≤V_S≤40V		15	**75**		15	**75**	µA

Electrical Characteristics

T_J=25°C, **T_{MIN}≤T_J≤T_{MAX} (Boldface type refers to limits over temperature range)**(1)

Parameter	Conditions	LM10BL			LM10CL			Units
		Min	Typ	Max	Min	Typ	Max	
Input offset voltage			0.3	2.0		0.5	4.0	mV
				3.0			**5.0**	mV
Input offset current(2)			0.1	0.7		0.2	2.0	nA
				1.5			**3.0**	nA
Input bias current			10	20		12	30	nA
				30			**40**	nA
Input resistance		250	500		150	400		kΩ
		150			**115**			kΩ
Large signal voltage gain	V_S=±3.25V, I_{OUT}=0	60	300		40	300		V/mV
	V_{OUT}=±3.2V	**40**			**25**			V/mV
	V_S=±3.25V, I_{OUT}=10 mA	10	25		5	25		V/mV
	V_{OUT}=±2.75 V	**4**			**3**			V/mV
	V_S=±0.6V **(0.65V),** I_{OUT}=±2 mA	1.5	3.0		1.0	3.0		V/mV
	V_{OUT}=±0.4V **(±0.3V),** V_{CM}=−0.4V	**0.5**			**0.75**			V/mV
Shunt gain(3)	1.5V≤V^+≤6.5V, R_L=500Ω	8	30		6	30		V/mV
	0.1 mA≤I_{OUT}≤10 mA	**4**			**4**			V/mV
Common-mode rejection	−3.25V≤V_{CM}≤2.4V **(2.25V)**	89	102		80	102		dB
	V_S=±3.25V	**83**			**74**			dB
Supply-voltage rejection	−0.2V≥V^-≥−5.4V	86	96		80	96		dB
	V^+=1.0V **(1.2V)**	**80**			**74**			dB
	1.0V **(1.1V)** ≤V^+≤6.3V	94	106		80	106		dB
	V^-=0.2V	**88**			**74**			dB

(1) These specifications apply for V^-≤V_{CM}≤V^+−0.85V **(1.0V),** 1.2V **(1.3V)** <V_S≤V_{MAX}, V_{REF}=0.2V and 0≤I_{REF}≤1.0 mA, unless otherwise specified: V_{MAX}=40V for the standard part and 6.5V for the low voltage part. Normal typeface indicates 25°C limits. **Boldface type indicates limits and altered test conditions for full-temperature-range operation;** this is −55°C to 125°C for the LM10, −25°C to 85°C for the LM10B(L) and 0°C to 70°C for the LM10C(L). The specifications do not include the effects of thermal gradients (τ_1=20 ms), die heating (τ_2=0.2s) or package heating. Gradient effects are small and tend to offset the electrical error (see curves).

(2) For T_J>90°C, I_{OS} may exceed 1.5 nA for V_{CM}=V^-. With T_J=125°C and V^-≤V_{CM}≤V^-+0.1V, I_{OS}≤5 nA.

(3) This defines operation in floating applications such as the bootstrapped regulator or two-wire transmitter. Output is connected to the V^+ terminal of the IC and input common mode is referred to V^- (see Typical Applications). Effect of larger output-voltage swings with higher load resistance can be accounted for by adding the positive-supply rejection error.

Copyright © 1998–2013, Texas Instruments Incorporated

Electrical Characteristics (continued)

T_J=25°C, **T_{MIN}≤T_J≤T_{MAX} (Boldface type refers to limits over temperature range)**[1]

Parameter	Conditions	LM10BL			LM10CL			Units
		Min	Typ	Max	Min	Typ	Max	
Offset voltage drift			2.0			5.0		μV/°C
Offset current drift			2.0			5.0		pA/°C
Bias current drift			60			90		pA/°C
Line regulation	1.2V **(1.3V)** ≤V_S≤6.5V		0.001	0.01		0.001	0.02	%/V
	0≤I_{REF}≤0.5 mA, V_{REF}=200 mV			**0.02**			**0.03**	%/V
Load regulation	0≤I_{REF}≤0.5 mA		0.01	0.1		0.01	0.15	%
	V^+−V_{REF}≥1.0V **(1.1V)**			**0.15**			**0.2**	%
Amplifier gain	0.2V≤V_{REF}≤5.5V	30	70		20	70		V/mV
		20			**15**			V/mV
Feedback sense voltage		195	200	205	190	200	210	mV
		194		**206**	**189**		**211**	mV
Feedback current			20	50		22	75	nA
				65			**90**	nA
Reference drift			0.002			0.003		%/°C
Supply current			260	400		280	500	μA
				500			**570**	μA

Definition of Terms

Input offset voltage: That voltage which must be applied between the input terminals to bias the unloaded output in the linear region.

Input offset current: The difference in the currents at the input terminals when the unloaded output is in the linear region.

Input bias current: The absolute value of the average of the two input currents.

Input resistance: The ratio of the change in input voltage to the change in input current on either input with the other grounded.

Large signal voltage gain: The ratio of the specified output voltage swing to the change in differential input voltage required to produce it.

Shunt gain: The ratio of the specified output voltage swing to the change in differential input voltage required to produce it with the output tied to the V^+ terminal of the IC. The load and power source are connected between the V^+ and V^- terminals, and input common-mode is referred to the V^- terminal.

Common-mode rejection: The ratio of the input voltage range to the change in offset voltage between the extremes.

Supply-voltage rejection: The ratio of the specified supply-voltage change to the change in offset voltage between the extremes.

Line regulation: The average change in reference output voltage over the specified supply voltage range.

Load regulation: The change in reference output voltage from no load to that load specified.

Feedback sense voltage: The voltage, referred to V^-, on the reference feedback terminal while operating in regulation.

Reference amplifier gain: The ratio of the specified reference output change to the change in feedback sense voltage required to produce it.

Feedback current: The absolute value of the current at the feedback terminal when operating in regulation.

Supply current: The current required from the power source to operate the amplifier and reference with their outputs unloaded and operating in the linear range.

Copyright © 1998–2013, Texas Instruments Incorporated

Typical Performance Characteristics (Op Amp)

Input Current

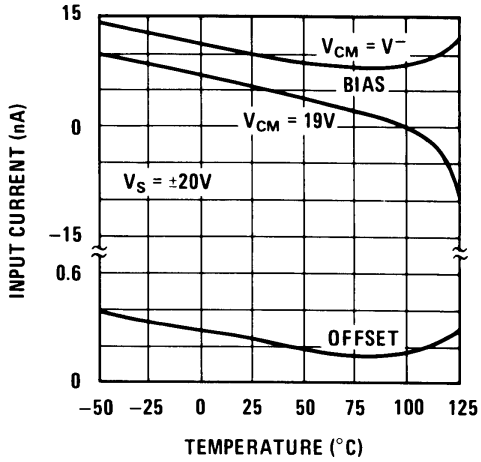

Figure 5.

Common Mode Limits

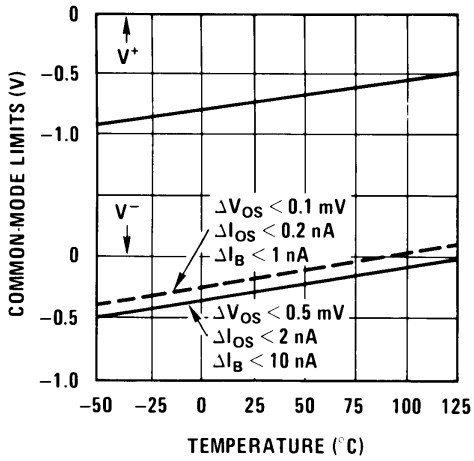

Figure 6.

Output Voltage Drift

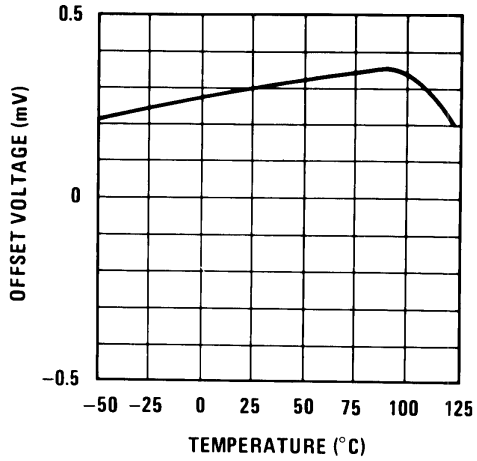

Figure 7.

Input Noise Voltage

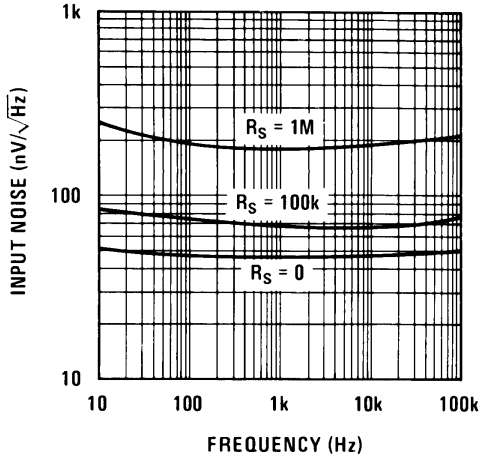

Figure 8.

DC Voltage Gain

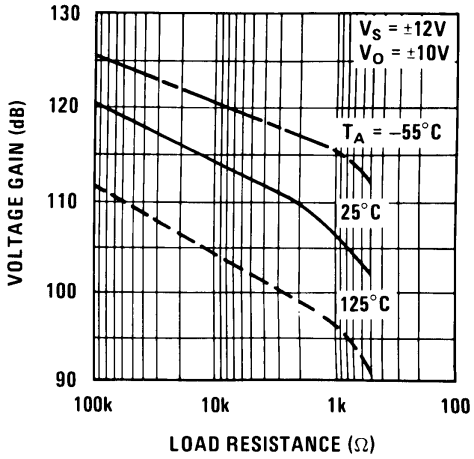

Figure 9.

Transconductance

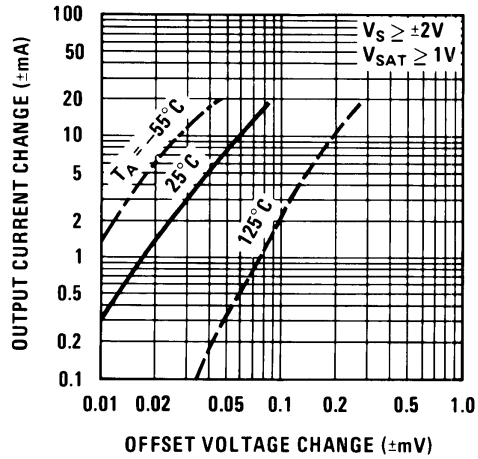

Figure 10.

Copyright © 1998–2013, Texas Instruments Incorporated

Typical Performance Characteristics (Op Amp) (continued)

Output Saturation Characteristics

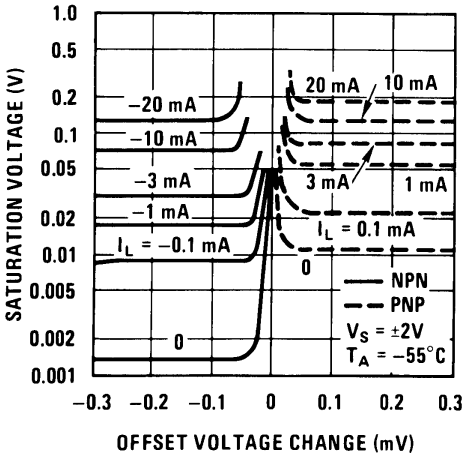

Figure 11.

Output Saturation Characteristics

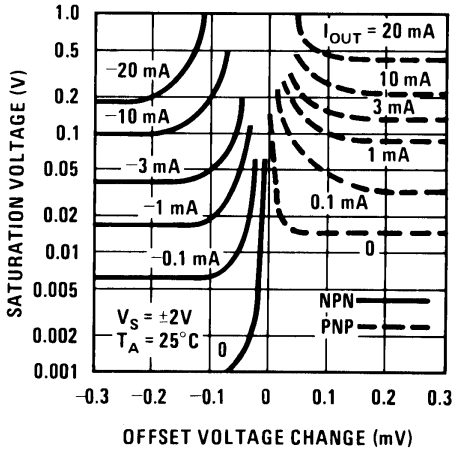

Figure 12.

Output Saturation Characteristics

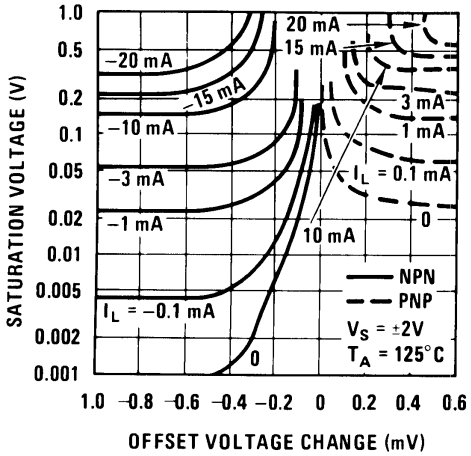

Figure 13.

Minimum Supply Voltage

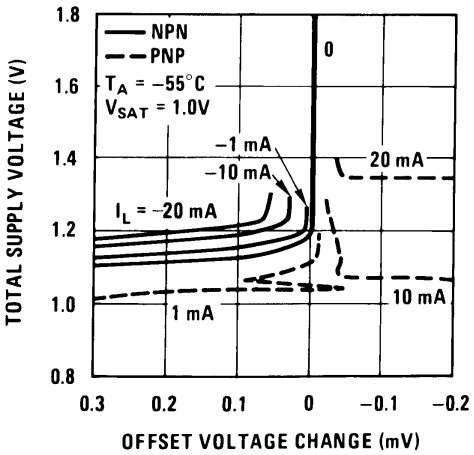

Figure 14.

Minimum Supply Voltage

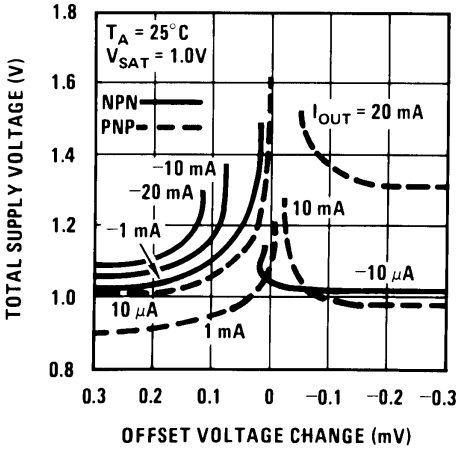

Figure 15.

Minimum Supply Voltage

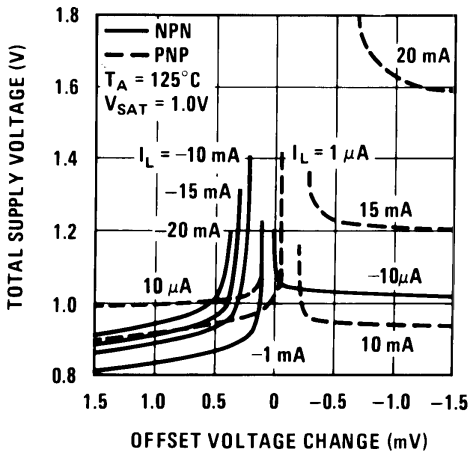

Figure 16.

Typical Performance Characteristics (Op Amp) (continued)

Frequency Response

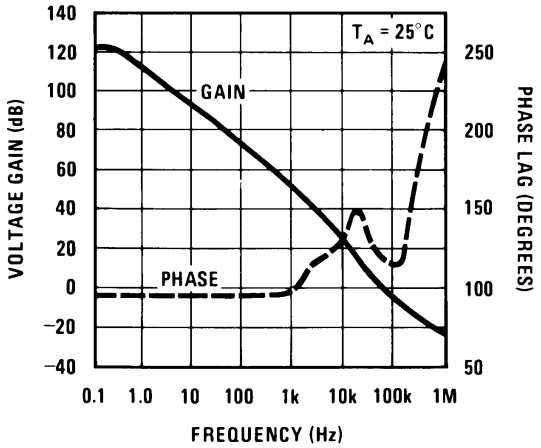

Figure 17.

Output Impedance

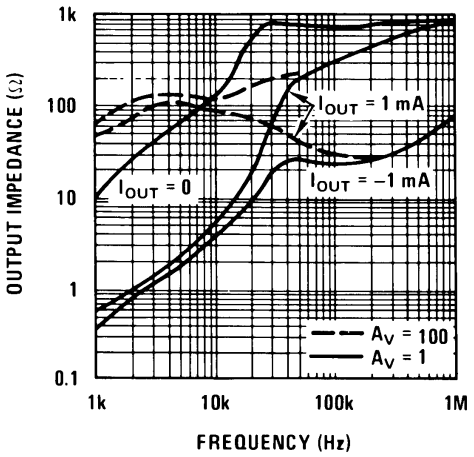

Figure 18.

Typical Stability Range

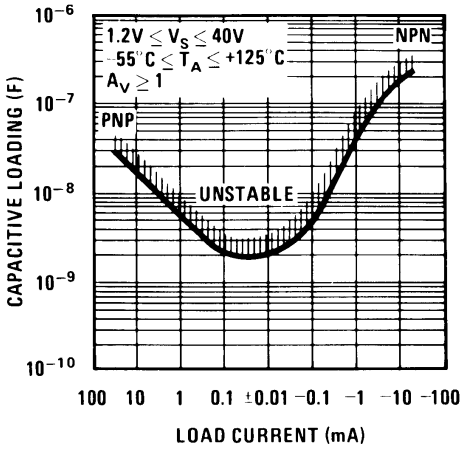

Figure 19.

Large Signal Response

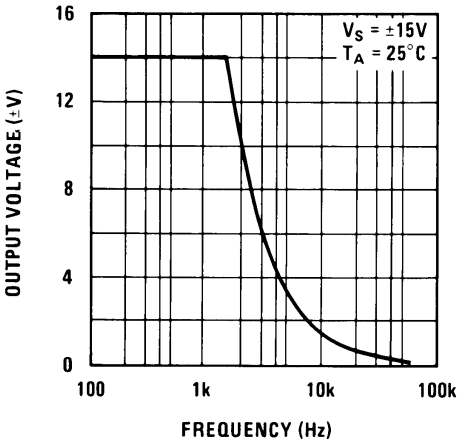

Figure 20.

Comparator Response Time For Various Input Overdrives

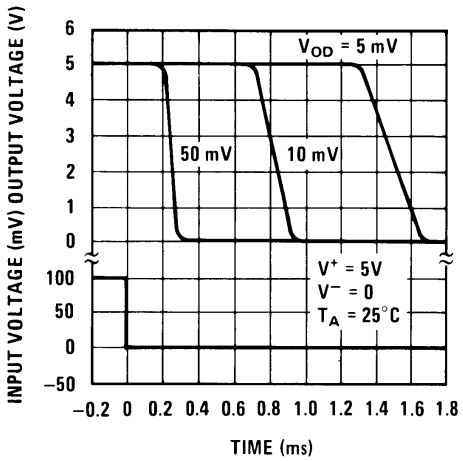

Figure 21.

Comparator Response Time For Various Input Overdrives

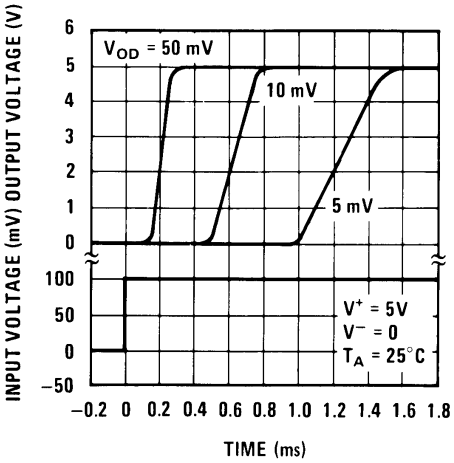

Figure 22.

Copyright © 1998–2013, Texas Instruments Incorporated

Typical Performance Characteristics (Op Amp) (continued)

Follower Pulse Response

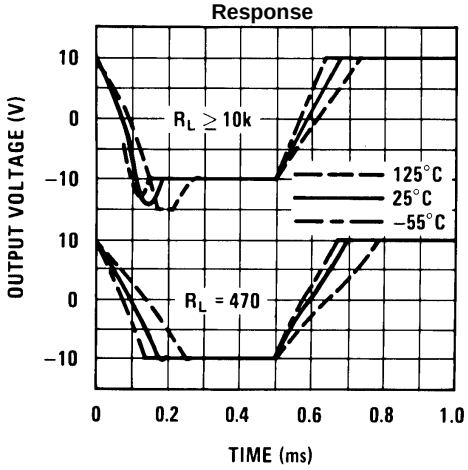

Figure 23.

Noise Rejection

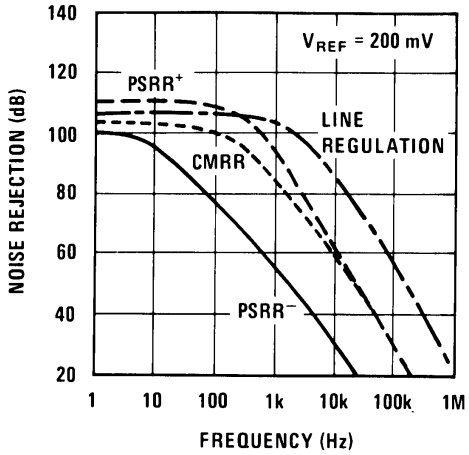

Figure 24.

Rejection Slew Limiting

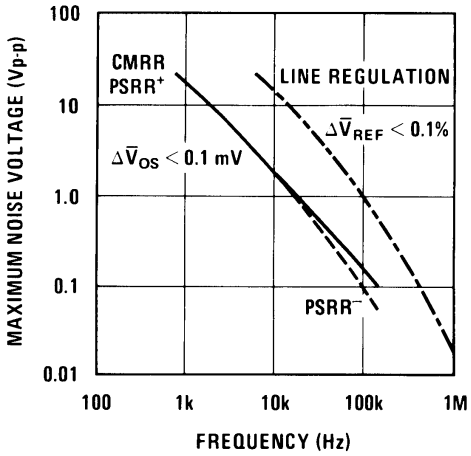

Figure 25.

Supply Current

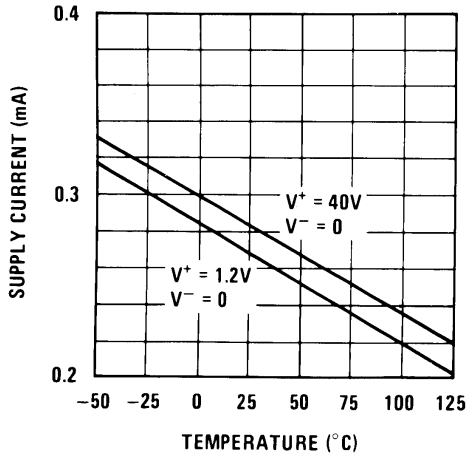

Figure 26.

Thermal Gradient Feedback

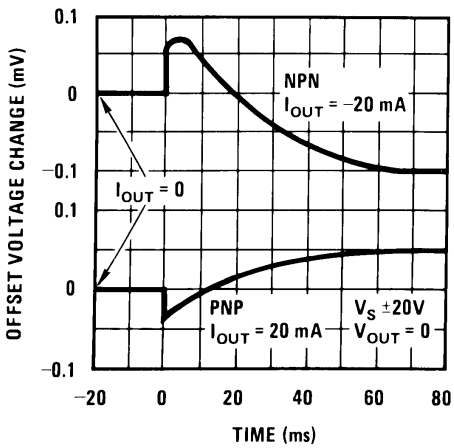

Figure 27.

Thermal Gradient Cross-coupling

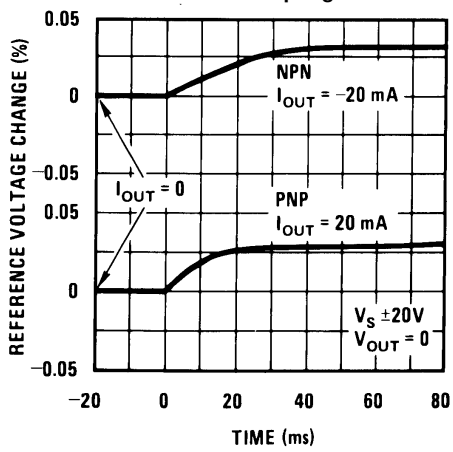

Figure 28.

Typical Performance Characteristics (Op Amp) (continued)

Shunt Gain

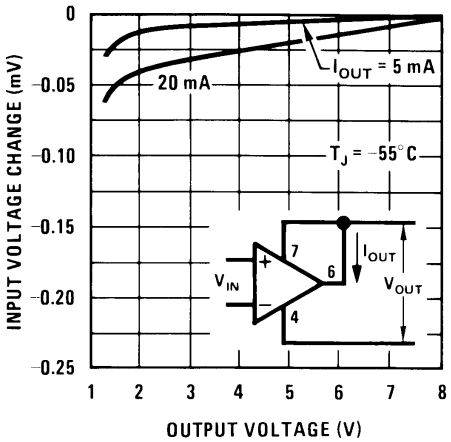

Figure 29.

Shunt Gain

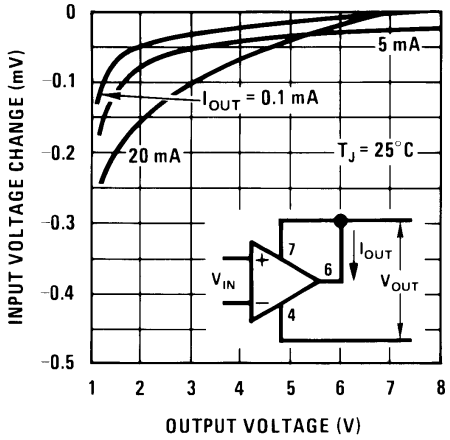

Figure 30.

Shunt Gain

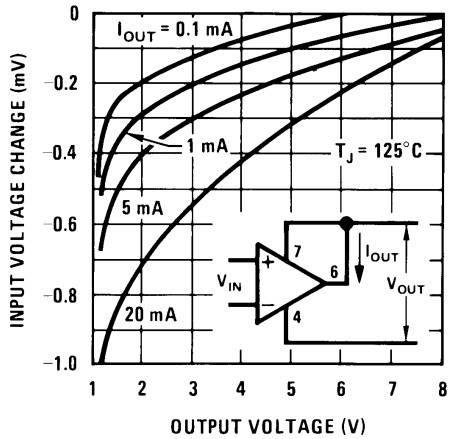

Figure 31.

Shunt Gain

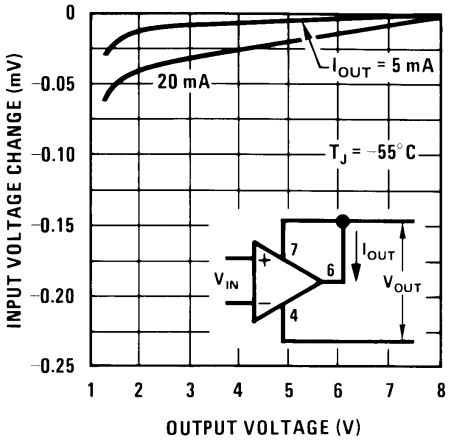

Figure 32.

Shunt Gain

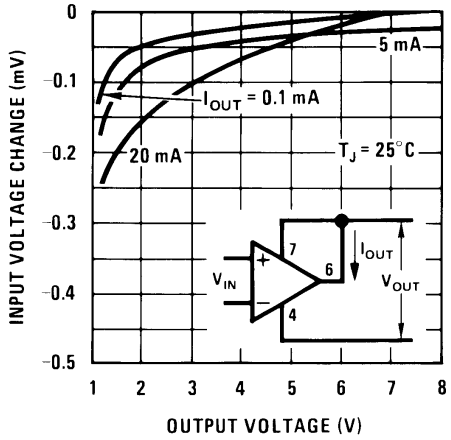

Figure 33.

Shunt Gain

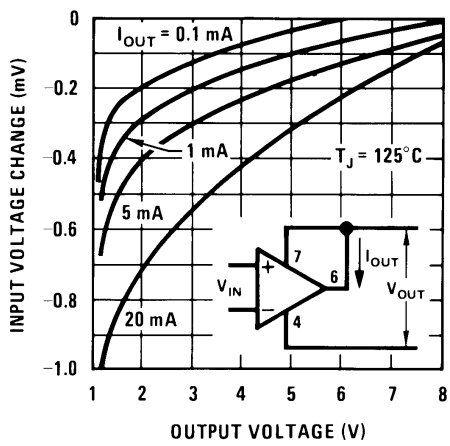

Figure 34.

Copyright © 1998–2013, Texas Instruments Incorporated

Typical Performance Characteristics (Reference)

Line Regulation

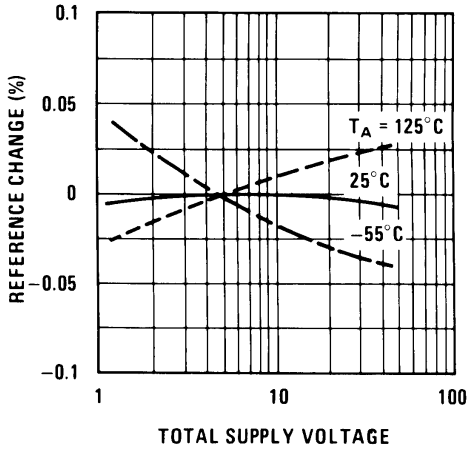

Figure 35.

Load Regulation

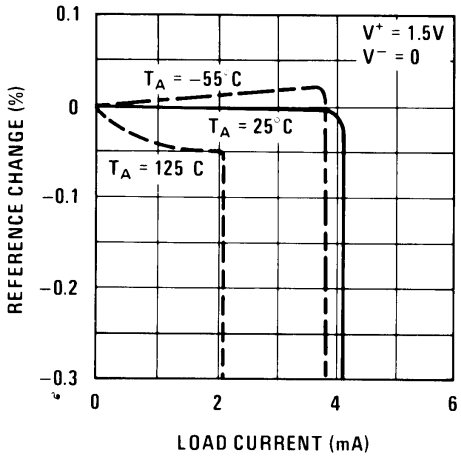

Figure 36.

Reference Noise Voltage

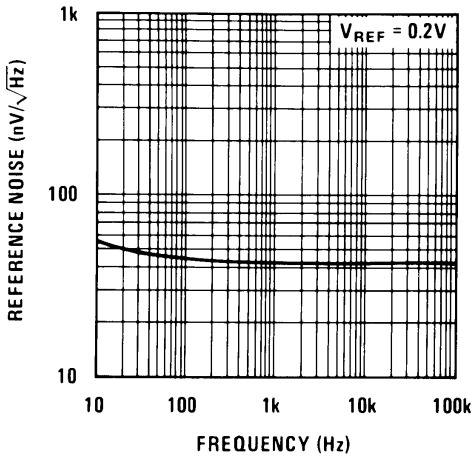

Figure 37.

Minimum Supply Voltage

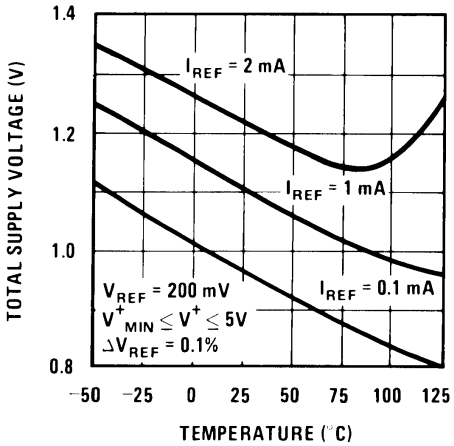

Figure 38.

Output Saturation

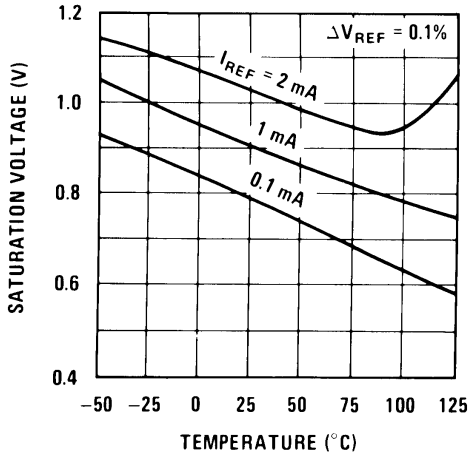

Figure 39.

Typical Stability Range

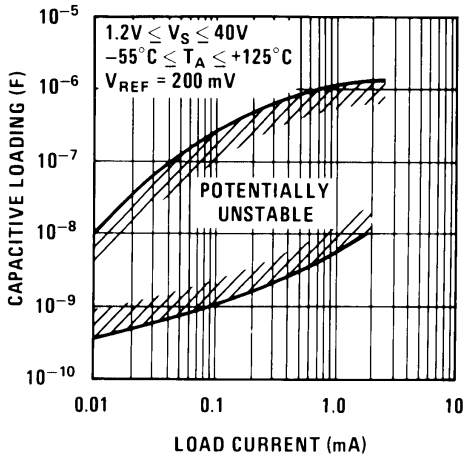

Figure 40.

TYPICAL APPLICATIONS

(Pin numbers are for devices in 8-pin packages)

Circuit descriptions available in application note AN-211 (Literature Number SNOA638).

Op Amp Offset Adjustment

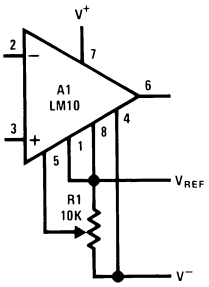

Figure 41. Standard

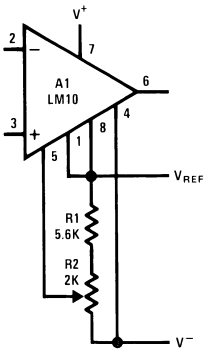

Figure 42. Limited Range

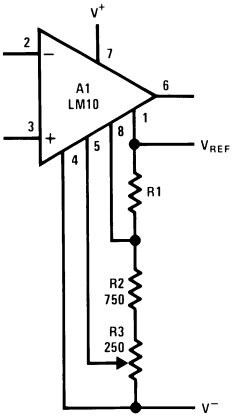

Figure 43. Limited Range With Boosted Reference

Positive Regulators

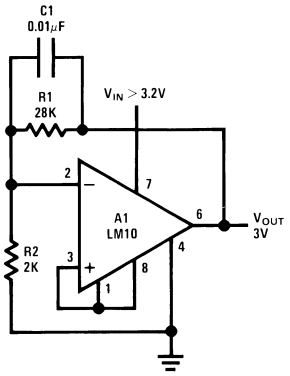

Figure 44. Low Voltage

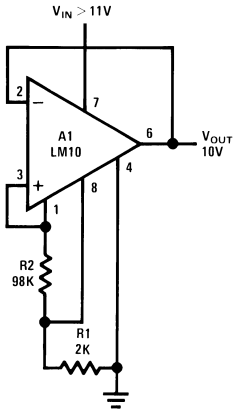

Figure 45. Best Regulation

Copyright © 1998–2013, Texas Instruments Incorporated

(Pin numbers are for devices in 8-pin packages)

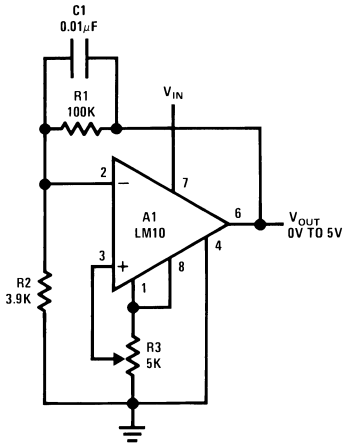

Use only electrolytic output capacitors.

Figure 46. Zero Output

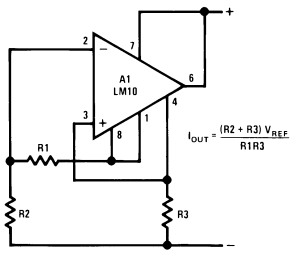

Figure 47. Current Regulator

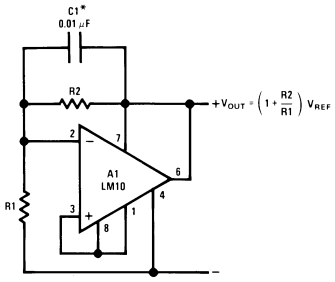

Required For Capacitive Loading

Figure 48. Shunt Regulator

(Pin numbers are for devices in 8-pin packages)

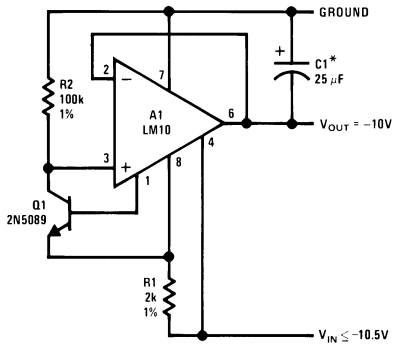

*Electrolytic

Figure 49. Negative Regulator

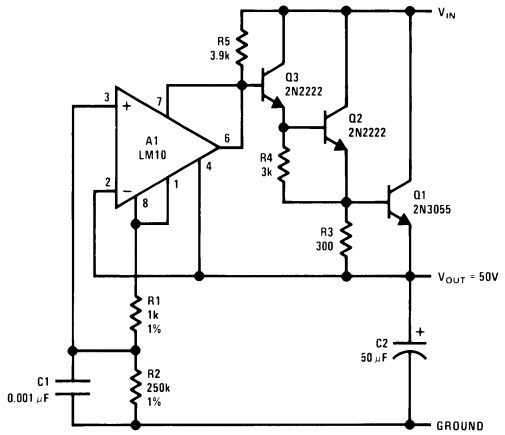

Figure 50. Precision Regulator

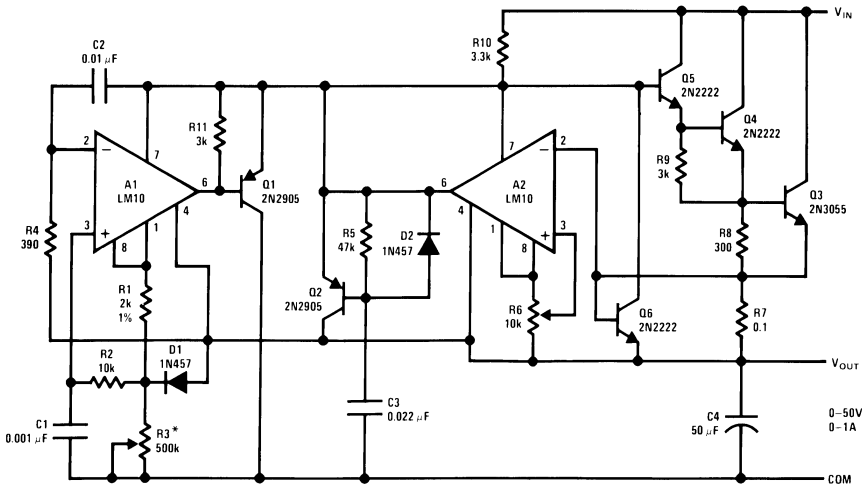

*$V_{OUT}=10^{-4}$ R3

Figure 51. Laboratory Power Supply

Copyright © 1998–2013, Texas Instruments Incorporated

(Pin numbers are for devices in 8-pin packages)

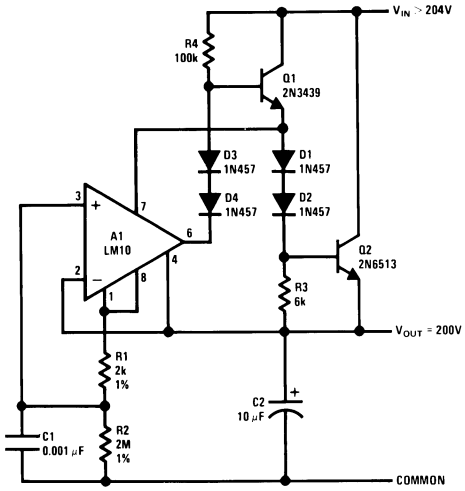

$$V_{OUT} = \frac{R2}{R1} V_{REF}$$

Figure 52. HV Regulator

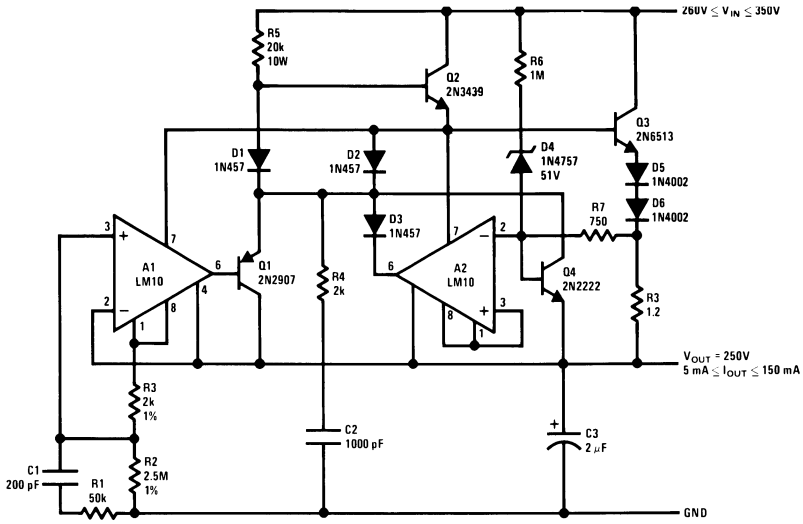

Figure 53. Protected HV Regulator

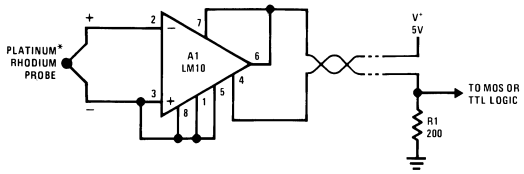

*800°C Threshold Is Established By Connecting Balance To V_{REF}.

Figure 54. Flame Detector

(Pin numbers are for devices in 8-pin packages)

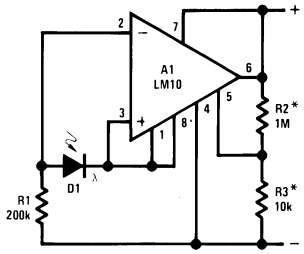

*Provides Hysteresis

Figure 55. Light Level Sensor

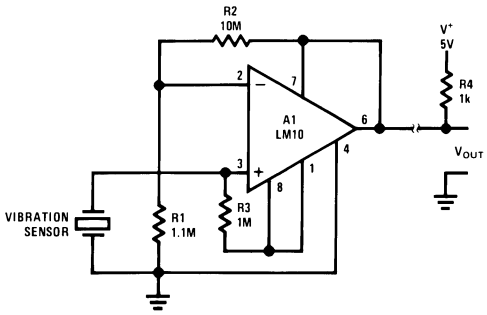

Figure 56. Remote Amplifier

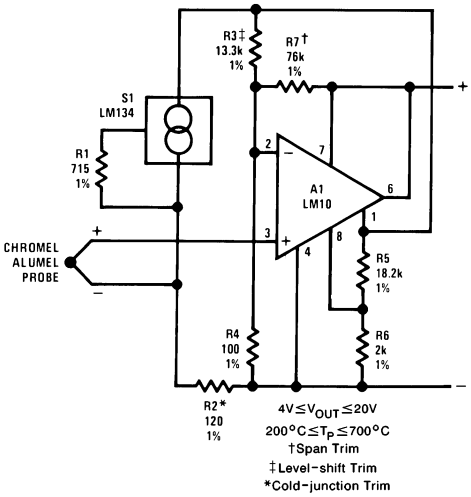

Figure 57. Remote Thermocouple Amplifier

Copyright © 1998–2013, Texas Instruments Incorporated

(Pin numbers are for devices in 8-pin packages)

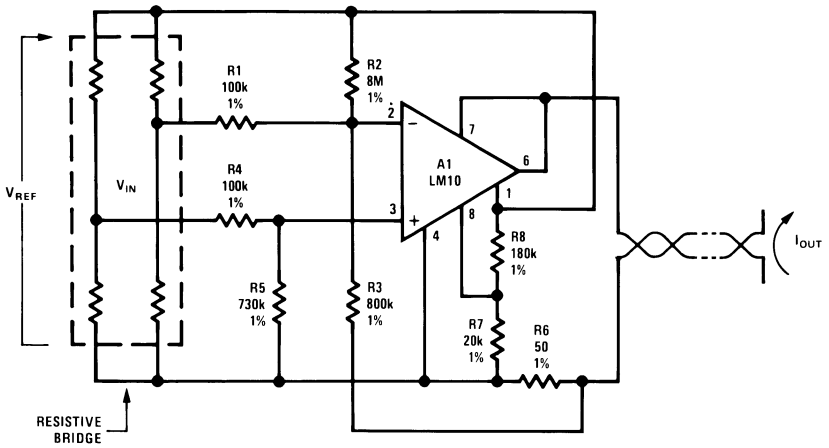

Figure 58. Transmitter for Bridge Sensor

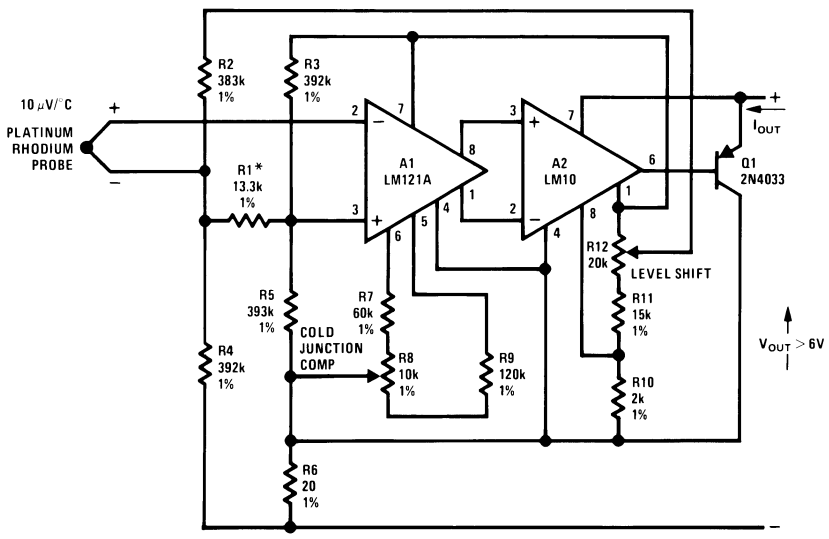

10 mA≤I_{OUT}≤50 mA
500°C≤T_P≤1500°C
*Gain Trim

Figure 59. Precision Thermocouple Transmitter

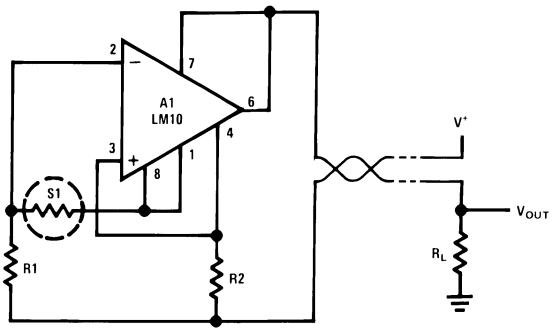

Figure 60. Resistance Thermometer Transmitter

Copyright © 1998–2013, Texas Instruments Incorporated

(Pin numbers are for devices in 8-pin packages)

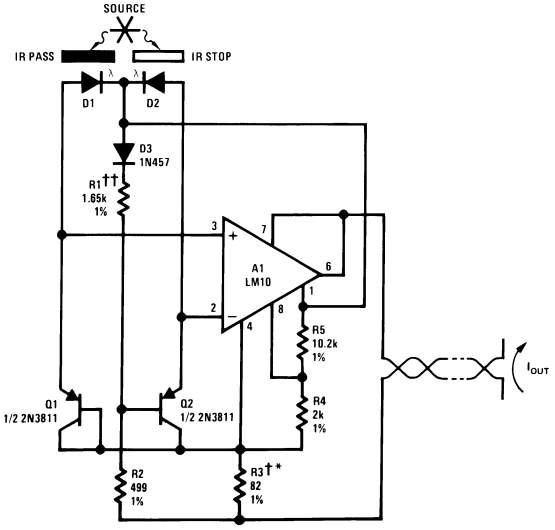

††Level-shift Trim
*Scale Factor Trim
†Copper Wire Wound
$1\ mA \le I_{OUT} \le 5\ mA$

$0.01 \le \frac{I_{D2}}{I_{D1}} \le 100$

Figure 61. Optical Pyrometer

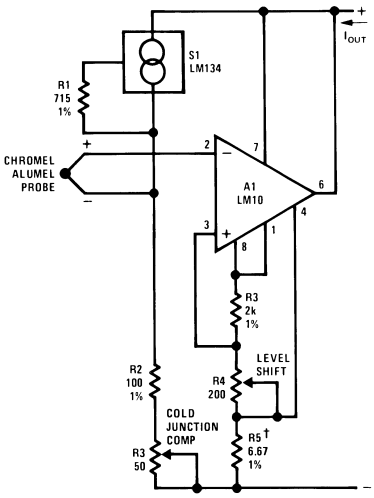

$200°C \le T_p \le 700°C$
$1\ mA \le I_{OUT} \le 5\ mA$
†Gain Trim

Figure 62. Thermocouple Transmitter

Copyright © 1998–2013, Texas Instruments Incorporated

(Pin numbers are for devices in 8-pin packages)

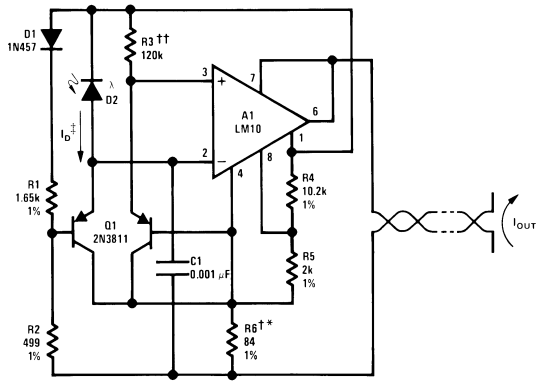

1 mA≤I_{OUT}≤5 mA
‡50 μA≤I_D≤500 μA
††Center Scale Trim
†Scale Factor Trim
*Copper Wire Wound

Figure 63. Logarithmic Light Sensor

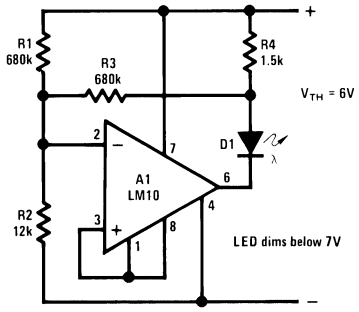

Figure 64. Battery-level Indicator

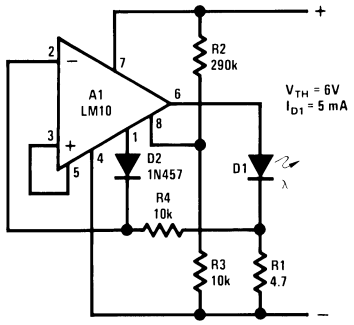

Figure 65. Battery-threshold Indicator

(Pin numbers are for devices in 8-pin packages)

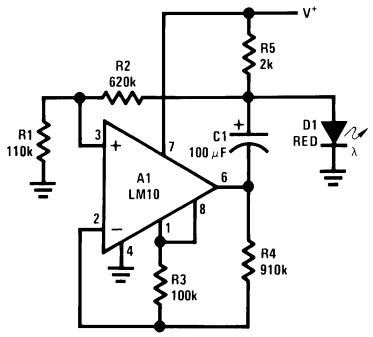

Flashes Above 1.2V
Rate Increases With
Voltage

Figure 66. Single-cell Voltage Monitor

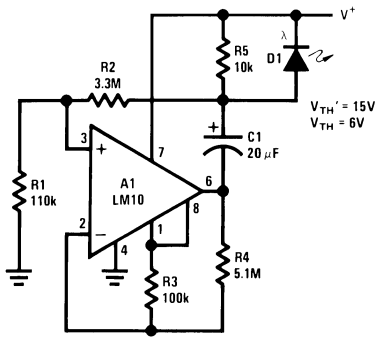

Flash Rate Increases
Above 6V and Below 15V

Figure 67. Double-ended Voltage Monitor

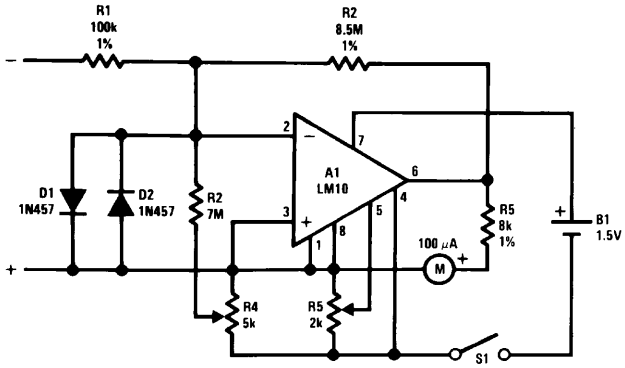

INPUT
10 mV, 100nA
FULL-SCALE

Figure 68. Meter Amplifier

Copyright © 1998–2013, Texas Instruments Incorporated

(Pin numbers are for devices in 8-pin packages)

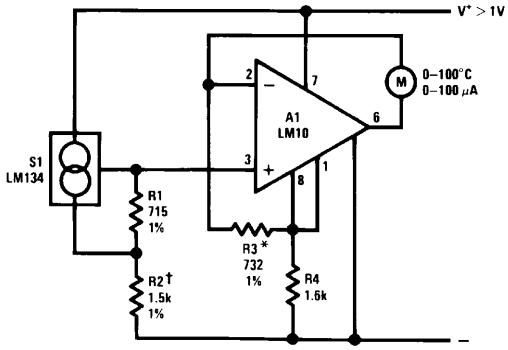

*Trim For Span
†Trim For Zero

Figure 69. Thermometer

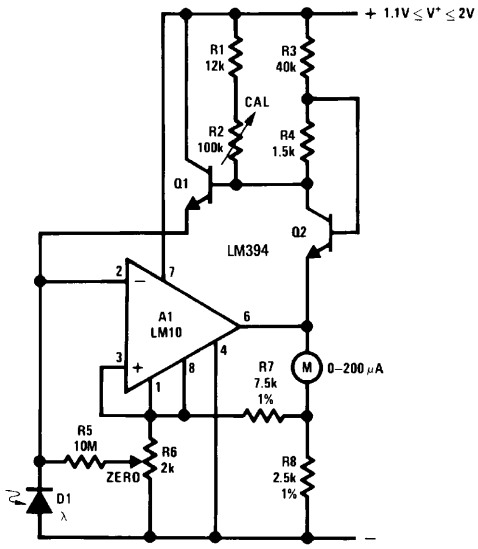

$1 \leq \lambda/\lambda_0 \leq 10^5$

Figure 70. Light Meter

(Pin numbers are for devices in 8-pin packages)

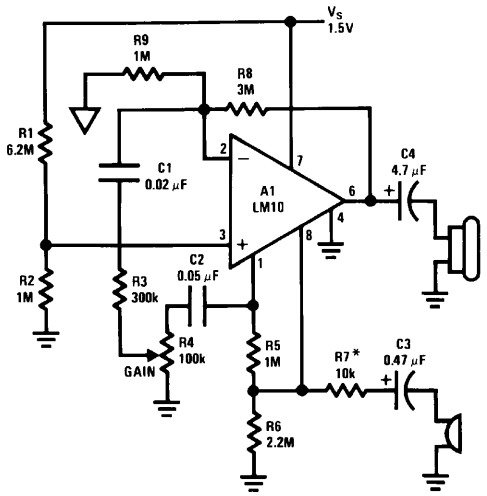

Z_{OUT}~680Ω @ 5 kHz
A_V≤1k
f_1~100 Hz
f_2~5 kHz
R_L~500
*Max Gain Trim

Figure 71. Microphone Amplifier

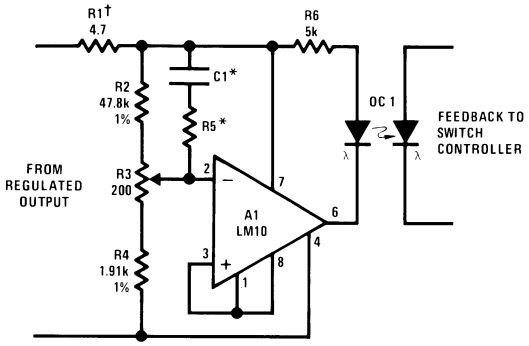

†Controls "Loop Gain"
*Optional Frequency Shaping

Figure 72. Isolated Voltage Sensor

Copyright © 1998–2013, Texas Instruments Incorporated

(Pin numbers are for devices in 8-pin packages)

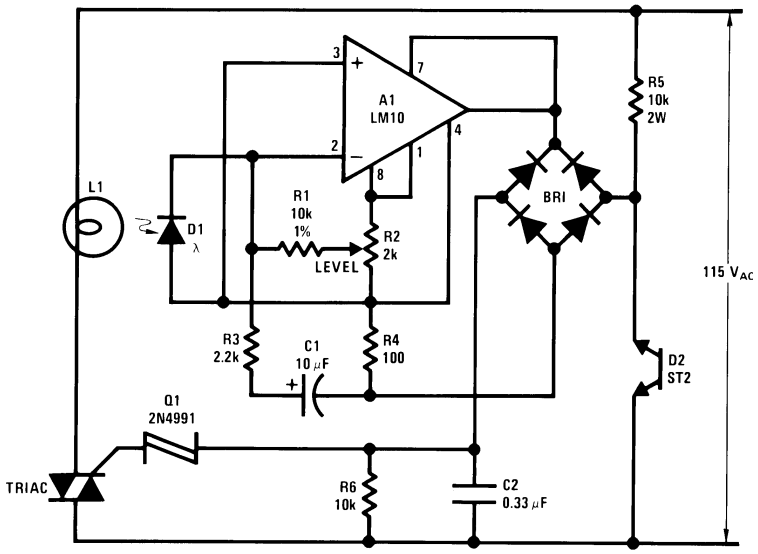

Figure 73. Light-level Controller

APPLICATION HINTS

With heavy amplifier loading to V⁻, resistance drops in the V⁻ lead can adversely affect reference regulation. Lead resistance can approach 1Ω. Therefore, the common to the reference circuitry should be connected as close as possible to the package.

Operational Amplifier Schematic

(Pin numbers are for 8-pin packages)

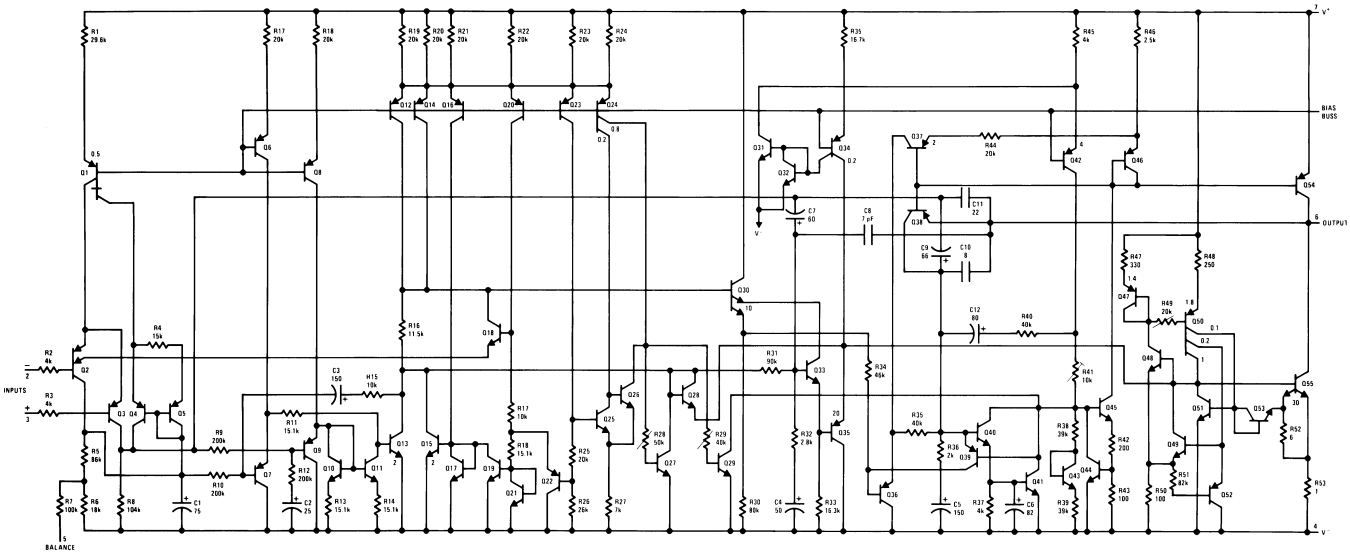

Reference and Internal Regulator

(Pin numbers are for 8-pin packages)

Copyright © 1998–2013, Texas Instruments Incorporated

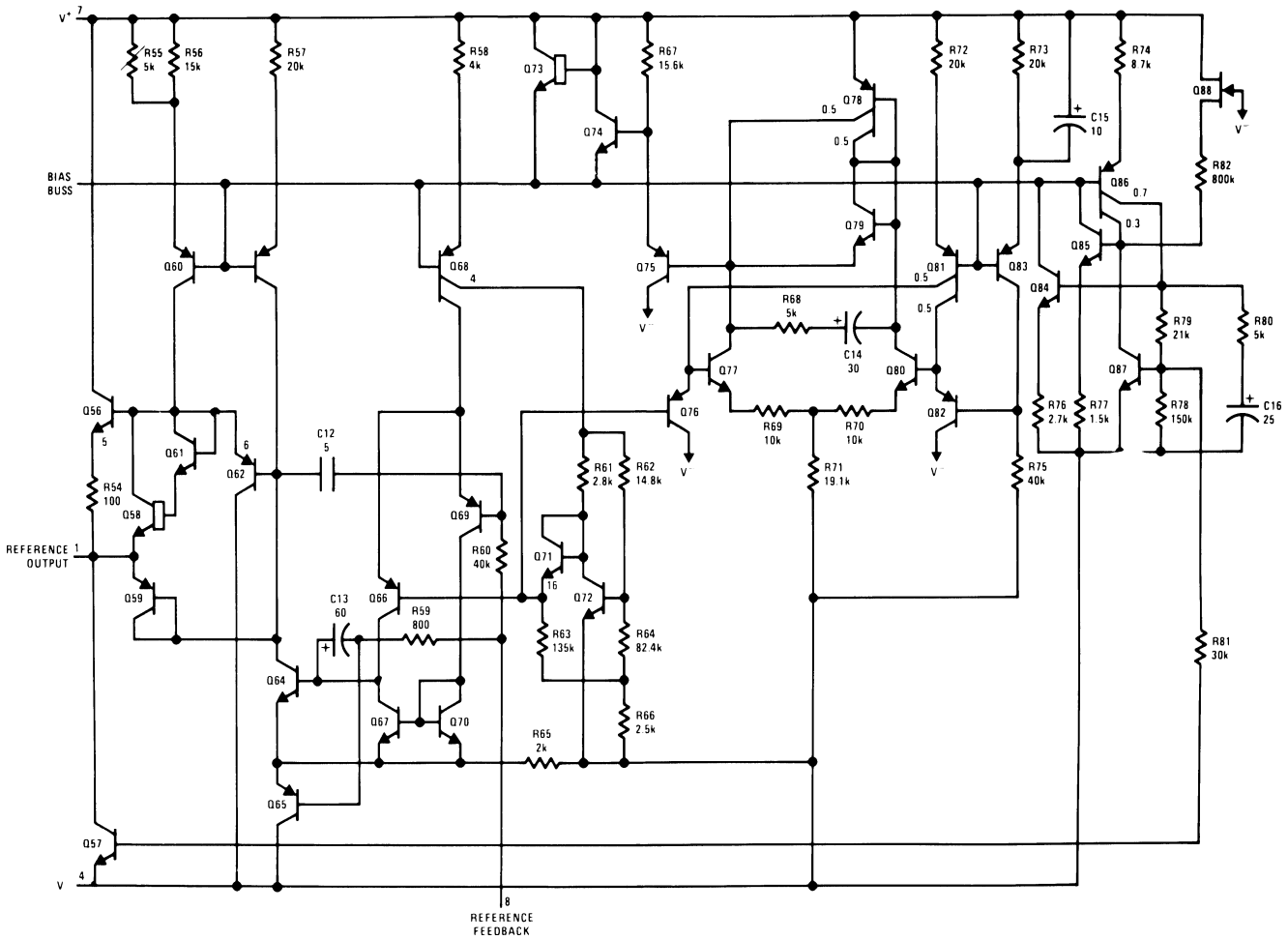
V+ 7
R55 5k
R56 15k
R57 20k
R58 4k
Q73
R67 15.6k
Q74
Q78
0.5
0.5
R72 20k
R73 20k
R74 8.7k
C15 10
Q88
V−
BIAS BUSS
R82 800k
Q86
0.7
0.3
Q79
Q85
Q60
Q68
4
Q75
V−
Q81
0.5
Q83
Q84
R68 5k
C14 30
0.5
R79 21k
R80 5k
Q77
Q80
Q87
Q56
5
Q76
R69 10k
R70 10k
Q82
R76 2.7k
R77 1.5k
R78 150k
C16 25
Q61
6
Q62
C12 5
R61 2.8k
R62 14.8k
V−
R71 19.1k
V−
R75 40k
R54 100
Q58
Q69
REFERENCE OUTPUT 1
R60 40k
Q71
16
Q72
Q59
C13 60
Q66
R59 800
R63 135k
R64 82.4k
R81 30k
Q64
Q67
Q70
R66 2.5k
R65 2k
Q65
Q57
V− 4
8
REFERENCE FEEDBACK

REVISION HISTORY

Changes from Revision C (March 2013) to Revision D	Page
• Changed layout of National Data Sheet to TI format	25

Copyright © 1998–2013, Texas Instruments Incorporated

PACKAGING INFORMATION

Orderable Device	Status (1)	Package Type	Package Drawing	Pins	Package Qty	Eco Plan (2)	Lead/Ball Finish	MSL Peak Temp (3)	Op Temp (°C)	Top-Side Markings (4)	Samples
LM10BH	ACTIVE	TO	NEV	8	500	TBD	Call TI	Call TI	-40 to 85	LM10BH	Samples
LM10BH/NOPB	ACTIVE	TO	NEV	8	500	Green (RoHS & no Sb/Br)	POST-PLATE	Level-1-NA-UNLIM	-40 to 85	LM10BH	Samples
LM10CH	ACTIVE	TO	NEV	8	500	TBD	Call TI	Call TI	0 to 70	LM10CH	Samples
LM10CH/NOPB	ACTIVE	TO	NEV	8	500	Green (RoHS & no Sb/Br)	POST-PLATE	Level-1-NA-UNLIM	0 to 70	LM10CH	Samples
LM10CLN	ACTIVE	PDIP	P	8	40	TBD	Call TI	Call TI	0 to 70	LM10CLN	Samples
LM10CLN/NOPB	ACTIVE	PDIP	P	8	40	Green (RoHS & no Sb/Br)	SN	Level-1-NA-UNLIM	0 to 70	LM10CLN	Samples
LM10CN	ACTIVE	PDIP	P	8	40	TBD	Call TI	Call TI	0 to 70	LM 10CN	Samples
LM10CN/NOPB	ACTIVE	PDIP	P	8	40	Green (RoHS & no Sb/Br)	Call TI	Level-1-NA-UNLIM	0 to 70	LM 10CN	Samples
LM10CWM	ACTIVE	SOIC	NPA	14	50	TBD	Call TI	Call TI	0 to 70	LM10CWM	Samples
LM10CWM/NOPB	ACTIVE	SOIC	NPA	14	50	Green (RoHS & no Sb/Br)	CU SN	Level-3-260C-168 HR	0 to 70	LM10CWM	Samples
LM10CWMX	ACTIVE	SOIC	NPA	14	1000	TBD	Call TI	Call TI	0 to 70	LM10CWM	Samples
LM10CWMX/NOPB	ACTIVE	SOIC	NPA	14	1000	Green (RoHS & no Sb/Br)	CU SN	Level-3-260C-168 HR	0 to 70	LM10CWM	Samples

(1) The marketing status values are defined as follows:
ACTIVE: Product device recommended for new designs.
LIFEBUY: TI has announced that the device will be discontinued, and a lifetime-buy period is in effect.
NRND: Not recommended for new designs. Device is in production to support existing customers, but TI does not recommend using this part in a new design.
PREVIEW: Device has been announced but is not in production. Samples may or may not be available.
OBSOLETE: TI has discontinued the production of the device.

(2) Eco Plan - The planned eco-friendly classification: Pb-Free (RoHS), Pb-Free (RoHS Exempt), or Green (RoHS & no Sb/Br) - please check http://www.ti.com/productcontent for the latest availability information and additional product content details.
TBD: The Pb-Free/Green conversion plan has not been defined.
Pb-Free (RoHS): TI's terms "Lead-Free" or "Pb-Free" mean semiconductor products that are compatible with the current RoHS requirements for all 6 substances, including the requirement that lead not exceed 0.1% by weight in homogeneous materials. Where designed to be soldered at high temperatures, TI Pb-Free products are suitable for use in specified lead-free processes.

Pb-Free (RoHS Exempt): This component has a RoHS exemption for either 1) lead-based flip-chip solder bumps used between the die and package, or 2) lead-based die adhesive used between the die and leadframe. The component is otherwise considered Pb-Free (RoHS compatible) as defined above.
Green (RoHS & no Sb/Br): TI defines "Green" to mean Pb-Free (RoHS compatible), and free of Bromine (Br) and Antimony (Sb) based flame retardants (Br or Sb do not exceed 0.1% by weight in homogeneous material)

(3) MSL, Peak Temp. -- The Moisture Sensitivity Level rating according to the JEDEC industry standard classifications, and peak solder temperature.

(4) Multiple Top-Side Markings will be inside parentheses. Only one Top-Side Marking contained in parentheses and separated by a "~" will appear on a device. If a line is indented then it is a continuation of the previous line and the two combined represent the entire Top-Side Marking for that device.

Important Information and Disclaimer: The information provided on this page represents TI's knowledge and belief as of the date that it is provided. TI bases its knowledge and belief on information provided by third parties, and makes no representation or warranty as to the accuracy of such information. Efforts are underway to better integrate information from third parties. TI has taken and continues to take reasonable steps to provide representative and accurate information but may not have conducted destructive testing or chemical analysis on incoming materials and chemicals. TI and TI suppliers consider certain information to be proprietary, and thus CAS numbers and other limited information may not be available for release.

In no event shall TI's liability arising out of such information exceed the total purchase price of the TI part(s) at issue in this document sold by TI to Customer on an annual basis.

P (R–PDIP–T8) PLASTIC DUAL–IN–LINE PACKAGE

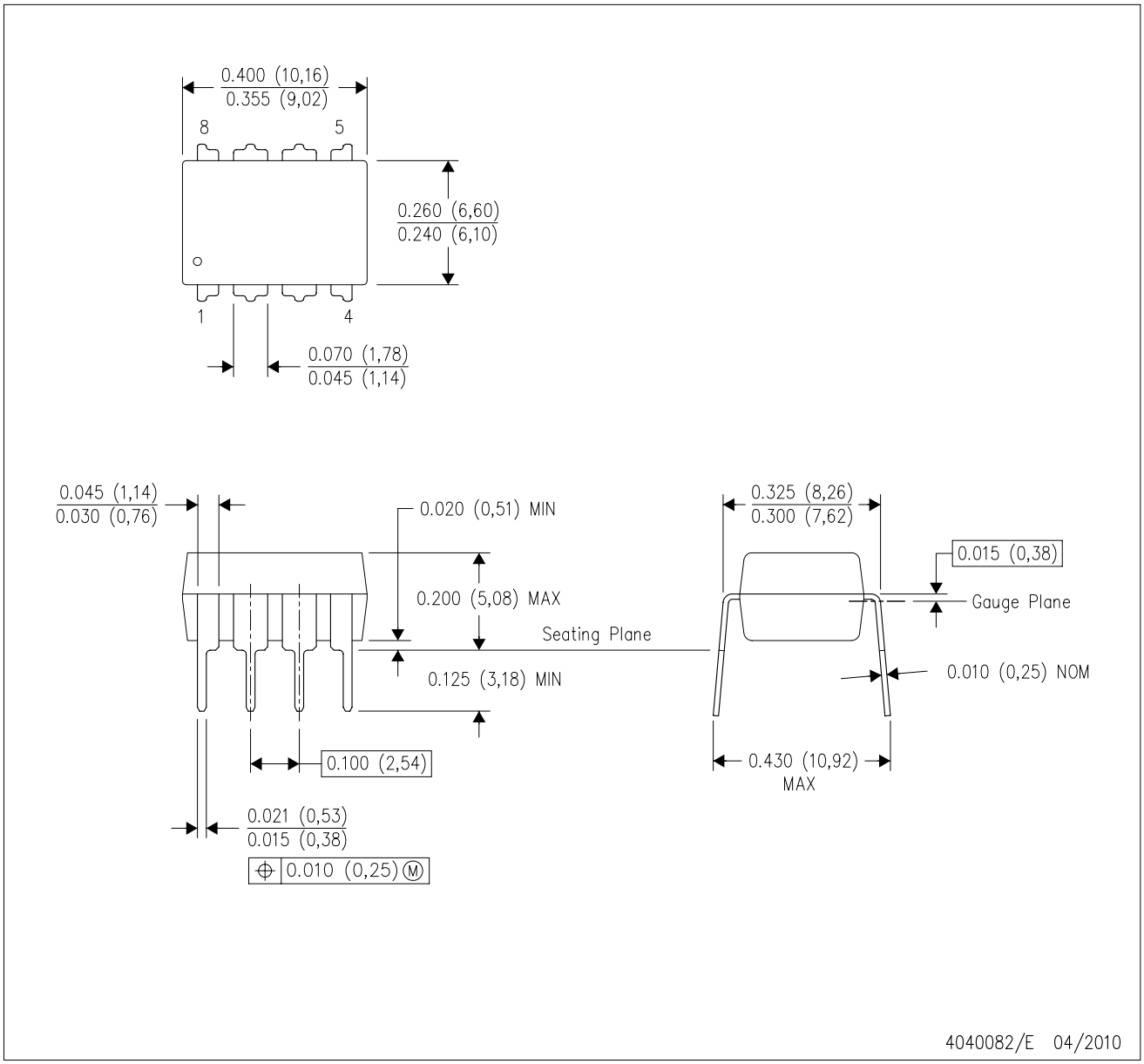

NOTES:
A. All linear dimensions are in inches (millimeters).
B. This drawing is subject to change without notice.
C. Falls within JEDEC MS–001 variation BA.

NPA0014B

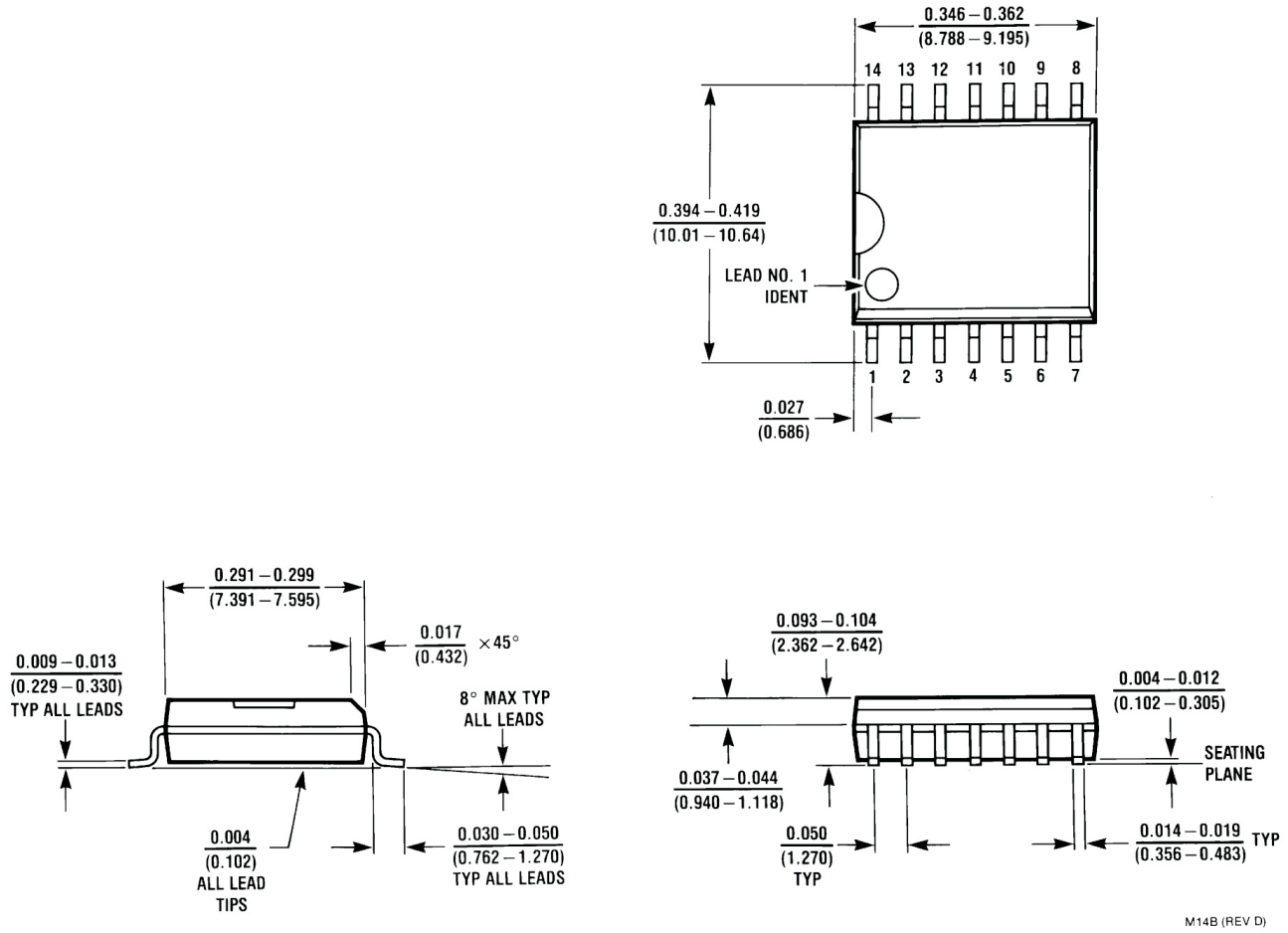
0.346 – 0.362
(8.788 – 9.195)
14 13 12 11 10 9 8
0.394 – 0.419
(10.01 – 10.64)
LEAD NO. 1
IDENT
1 2 3 4 5 6 7
0.027
(0.686)
0.291 – 0.299
(7.391 – 7.595)
0.017
(0.432)
×45°
0.009 – 0.013
(0.229 – 0.330)
TYP ALL LEADS
8° MAX TYP
ALL LEADS
0.004
(0.102)
ALL LEAD
TIPS
0.030 – 0.050
(0.762 – 1.270)
TYP ALL LEADS
0.093 – 0.104
(2.362 – 2.642)
0.004 – 0.012
(0.102 – 0.305)
SEATING
PLANE
0.037 – 0.044
(0.940 – 1.118)
0.050
(1.270)
TYP
0.014 – 0.019
(0.356 – 0.483)
TYP
M14B (REV D)

NEV0008A

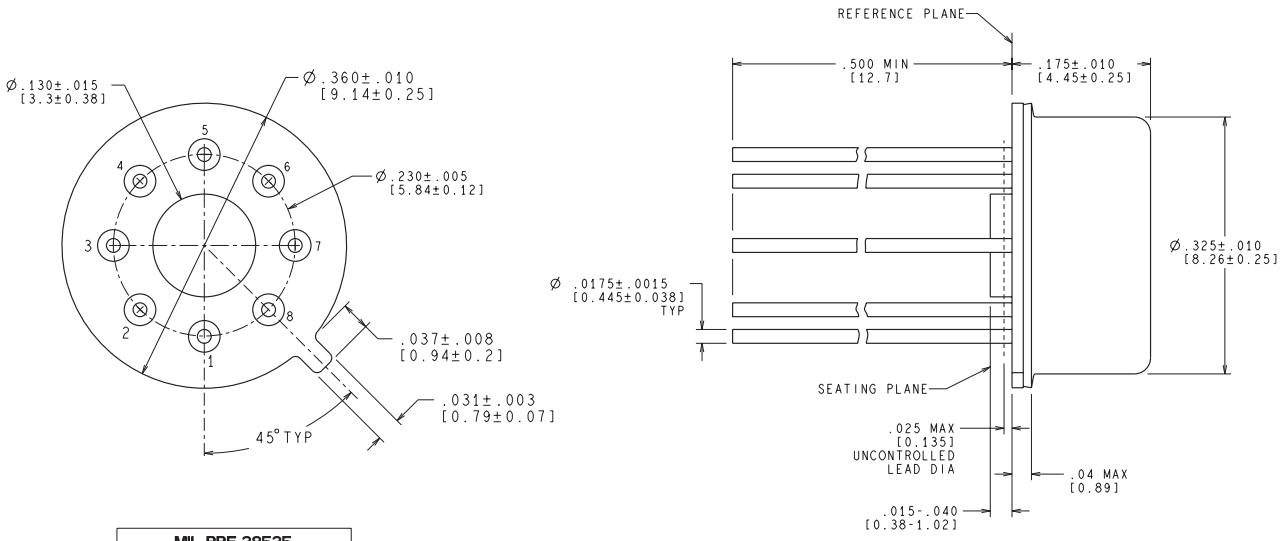

MIL-PRF-38535
CONFIGURATION CONTROL

CONTROLLING DIMENSION IS INCH
VALUES IN [ ] ARE IN MILLIMETERS

H08A (REV C)

IMPORTANT NOTICE

Texas Instruments Incorporated and its subsidiaries (TI) reserve the right to make corrections, enhancements, improvements and other changes to its semiconductor products and services per JESD46, latest issue, and to discontinue any product or service per JESD48, latest issue. Buyers should obtain the latest relevant information before placing orders and should verify that such information is current and complete. All semiconductor products (also referred to herein as “components”) are sold subject to TI’s terms and conditions of sale supplied at the time of order acknowledgment.

TI warrants performance of its components to the specifications applicable at the time of sale, in accordance with the warranty in TI’s terms and conditions of sale of semiconductor products. Testing and other quality control techniques are used to the extent TI deems necessary to support this warranty. Except where mandated by applicable law, testing of all parameters of each component is not necessarily performed.

TI assumes no liability for applications assistance or the design of Buyers’ products. Buyers are responsible for their products and applications using TI components. To minimize the risks associated with Buyers’ products and applications, Buyers should provide adequate design and operating safeguards.

TI does not warrant or represent that any license, either express or implied, is granted under any patent right, copyright, mask work right, or other intellectual property right relating to any combination, machine, or process in which TI components or services are used. Information published by TI regarding third-party products or services does not constitute a license to use such products or services or a warranty or endorsement thereof. Use of such information may require a license from a third party under the patents or other intellectual property of the third party, or a license from TI under the patents or other intellectual property of TI.

Reproduction of significant portions of TI information in TI data books or data sheets is permissible only if reproduction is without alteration and is accompanied by all associated warranties, conditions, limitations, and notices. TI is not responsible or liable for such altered documentation. Information of third parties may be subject to additional restrictions.

Resale of TI components or services with statements different from or beyond the parameters stated by TI for that component or service voids all express and any implied warranties for the associated TI component or service and is an unfair and deceptive business practice. TI is not responsible or liable for any such statements.

Buyer acknowledges and agrees that it is solely responsible for compliance with all legal, regulatory and safety-related requirements concerning its products, and any use of TI components in its applications, notwithstanding any applications-related information or support that may be provided by TI. Buyer represents and agrees that it has all the necessary expertise to create and implement safeguards which anticipate dangerous consequences of failures, monitor failures and their consequences, lessen the likelihood of failures that might cause harm and take appropriate remedial actions. Buyer will fully indemnify TI and its representatives against any damages arising out of the use of any TI components in safety-critical applications.

In some cases, TI components may be promoted specifically to facilitate safety-related applications. With such components, TI’s goal is to help enable customers to design and create their own end-product solutions that meet applicable functional safety standards and requirements. Nonetheless, such components are subject to these terms.

No TI components are authorized for use in FDA Class III (or similar life-critical medical equipment) unless authorized officers of the parties have executed a special agreement specifically governing such use.

Only those TI components which TI has specifically designated as military grade or “enhanced plastic” are designed and intended for use in military/aerospace applications or environments. Buyer acknowledges and agrees that any military or aerospace use of TI components which have ***not*** been so designated is solely at the Buyer's risk, and that Buyer is solely responsible for compliance with all legal and regulatory requirements in connection with such use.

TI has specifically designated certain components as meeting ISO/TS16949 requirements, mainly for automotive use. In any case of use of non-designated products, TI will not be responsible for any failure to meet ISO/TS16949.

Products		**Applications**	
Audio	www.ti.com/audio	Automotive and Transportation	www.ti.com/automotive
Amplifiers	amplifier.ti.com	Communications and Telecom	www.ti.com/communications
Data Converters	dataconverter.ti.com	Computers and Peripherals	www.ti.com/computers
DLP® Products	www.dlp.com	Consumer Electronics	www.ti.com/consumer-apps
DSP	dsp.ti.com	Energy and Lighting	www.ti.com/energy
Clocks and Timers	www.ti.com/clocks	Industrial	www.ti.com/industrial
Interface	interface.ti.com	Medical	www.ti.com/medical
Logic	logic.ti.com	Security	www.ti.com/security
Power Mgmt	power.ti.com	Space, Avionics and Defense	www.ti.com/space-avionics-defense
Microcontrollers	microcontroller.ti.com	Video and Imaging	www.ti.com/video
RFID	www.ti-rfid.com		
OMAP Applications Processors	www.ti.com/omap	**TI E2E Community**	e2e.ti.com
Wireless Connectivity	www.ti.com/wirelessconnectivity		

Mailing Address: Texas Instruments, Post Office Box 655303, Dallas, Texas 75265
Copyright © 2013, Texas Instruments Incorporated

Общество с ограниченной ответственностью «МосЧип» ИНН 7719860671 / КПП 771901001
Адрес: 105318, г.Москва, ул.Щербаковская д.3, офис 1107

Данный компонент на территории Российской Федерации

Вы можете приобрести в компании MosChip.

Для оперативного оформления запроса Вам необходимо перейти по данной ссылке:

http://moschip.ru/get-element

Вы можете разместить у нас заказ для любого Вашего проекта, будь то серийное производство или разработка единичного прибора.

В нашем ассортименте представлены ведущие мировые производители активных и пассивных электронных компонентов.

Нашей специализацией является поставка электронной компонентной базы двойного назначения, продукции таких производителей как XILINX, Intel (ex.ALTERA), Vicor, Microchip, Texas Instruments, Analog Devices, Mini-Circuits, Amphenol, Glenair.

Сотрудничество с глобальными дистрибьюторами электронных компонентов, предоставляет возможность заказывать и получать с международных складов практически любой перечень компонентов в оптимальные для Вас сроки.

На всех этапах разработки и производства наши партнеры могут получить квалифицированную поддержку опытных инженеров.

Система менеджмента качества компании отвечает требованиям в соответствии с ГОСТ Р ИСО 9001, ГОСТ РВ 0015-002 и ЭС РД 009

Офис по работе с юридическими лицами:

105318, г.Москва, ул.Щербаковская д.3, офис 1107, 1118, ДЦ «Щербаковский»

Телефон: +7 495 668-12-70 (многоканальный)

Факс: +7 495 668-12-70 (доб.304)

E-mail: info@moschip.ru

Skype отдела продаж:
moschip.ru
moschip.ru_4
moschip.ru_6
moschip.ru_9