⚠Note • Please read rating and ⚠CAUTION (for storage, operating, rating, soldering, mounting and handling) in this catalog to prevent smoking and/or burning, etc.
• This catalog has only typical specifications. Therefore, please approve our product specifications or transact the approval sheet for product specifications before ordering.

C49E.pdf
Mar.12,2014

# Radial Lead Type Monolithic Ceramic Capacitors

muRata Innovator in Electronics

Murata
Manufacturing Co., Ltd.

Cat.No.C49E-22

**EU RoHS Compliant**

- All the products in this catalog comply with EU RoHS.
- EU RoHS is "the European Directive 2011/65/EU on the Restriction of the Use of Certain Hazardous Substances in Electrical and Electronic Equipment."
- For more details, please refer to our website 'Murata's Approach for EU RoHS' (http://www.murata.com/info/rohs.html).

# CONTENTS

Part Numbering — 2

1 RCE Series 125°C max. (for Automotive) (DC25V-DC1kV) — 4

● Marking — 6

Temperature Compensating Type, C0G/U2J Characteristics — 6

High Dielectric Constant Type, X7R/X7S Characteristics — 11

● Specifications and Test Methods — 14

2 RHE Series 150°C max. (for Automotive) (DC50V-DC100V) — 20

● Marking — 21

Temperature Compensating Type, X8G Characteristics — 22

High Dielectric Constant Type, X8L Characteristics — 23

● Specifications and Test Methods — 26

3 RDE Series (For General Use Only) (DC25V-DC1kV) — 29

● Marking — 30

Temperature Compensating Type, C0G/U2J Characteristics — 30

High Dielectric Constant Type, X7R/X7S Characteristics — 35

High Dielectric Constant Type, F/Y5V Characteristics — 38

● Specifications and Test Methods — 39

4 RDE Series Large Capacitance and High Allowable Ripple Current (For General Use Only) (DC250V-DC630V) — 42

● Marking — 43

High Dielectric Constant Type, X7T Characteristics — 43

● Specifications and Test Methods — 45

Reference Data (Typical Example) — 47

RCE Series — 47

RHE Series — 48

RDE Series — 49

Packaging — 50

⚠Caution — 52

Notice — 54

## Part Numbering

### Radial Lead Type Monolithic Ceramic Capacitors

(Part Number) RC E R7 1H 104 K 0 M1 H03 A
❶ ❷ ❸ ❹ ❺ ❻ ❼ ❽ ❾ ❿

❶Product ID

❷Series/Terminal

| Product ID | Series/Terminal | |
|---|---|---|
| RC | E | Radial Lead Type Monolithic Ceramic Capacitors 125°C max. (for Automotive) (DC25V-DC1kV) |
| RH | E | Radial Lead Type Monolithic Ceramic Capacitors 150°C max. (for Automotive) (DC50V-DC100V) |
| RD | E | Radial Lead Type Monolithic Ceramic Capacitors (Only for General Use) (DC25V-DC1kV) |

❸Temperature Characteristics

| Code | Temperature Characteristics | Reference Temperature | Temperature Range | Capacitance Change or Temperature Coefficient | Operating Temperature Range |
|---|---|---|---|---|---|
| 5C | C0G* | 25°C | 25 to 125°C | 0±30ppm/°C | -55 to 125°C |
| 5G | X8G* | 25°C | 25 to 150°C | 0±30ppm/°C | -55 to 150°C |
| 7U | U2J | 25°C | 25 to 125°C | -750±120ppm/°C | -55 to 125°C |
| C7 | X7S | 25°C | -55 to 125°C | ±22% | -55 to 125°C |
| D7 | X7T | 25°C | -55 to 125°C | +22, -33% | -55 to 125°C |
| F1 | F | 20°C | -25 to 85°C | +30, -80% | -25 to 85°C |
| F5 | Y5V | 25°C | -30 to 85°C | +22, -82% | -30 to 85°C |
| L8 | X8L | 25°C | -55 to 125°C | ±15% | -55 to 150°C |
| | | | 125 to 150°C | +15, -40% | |
| R7 | X7R | 25°C | -55 to 125°C | ±15% | -55 to 125°C |

* Please refer to table for Capacitance change under reference temperature.

• Capacitance change from each temperature

| Char. | Nominal Values (ppm/°C) *1 | Capacitance Change from 25°C (%) | | | | | |
|---|---|---|---|---|---|---|---|
| | | -55°C | | -30°C | | -10°C | |
| | | Max. | Min. | Max. | Min. | Max. | Min. |
| C0G | 0±30 | 0.58 | -0.24 | 0.40 | -0.17 | 0.25 | -0.11 |
| X8G | | | | | | | |
| U2J | -750±120 | 8.78 | 5.04 | 6.04 | 3.47 | 3.84 | 2.21 |

*1: Nominal values denote the temperature coefficient within a range of 25 to 125°C.

❹Rated Voltage

| Code | Rated Voltage |
|---|---|
| 1E | DC25V |
| 1H | DC50V |
| 2A | DC100V |
| 2E | DC250V |
| 2W | DC450V |
| 2J | DC630V |
| 3A | DC1kV |

❺Capacitance

Expressed by three figures. The unit is pico-farad (pF). The first and second figures are significant digits, and the third figure expresses the number of zeros that follow the two numbers.
If there is a decimal point, it is expressed by the capital letter "**R**."
In this case, all figures are significant digits.

❻Capacitance Tolerance

| Code | Capacitance Tolerance | Temperature Characteristics | Capacitance Step |
|---|---|---|---|
| C | ±0.25pF | C0G/X8G | ≦5pF : 1pF Step |
| D | ±0.5pF | | 6 to 9pF : 1pF Step |
| J | ±5% | | ≧10 : E12 Series |
| K | ±10% | X7S/X7T/X7R/X8L | E6 Series |
| M | ±20% | X7S/X7T/X7R/X8L | E3 Series |
| Z | +80%, -20% | F/Y5V | E3 Series |

Continued on the following page. ↗

Continued from the preceding page.

❼Dimensions (LxW)

| Code | Dimensions (LxW) |
|---|---|
| **0** | 3.6×3.5mm or 4.0×3.5mm or 5.0×3.5mm (Depends on Part Number List) |
| **1** | 4.0×3.5mm or 4.5×3.5mm or 5.0×3.5mm (Depends on Part Number List) |
| **2** | 5.5×4.0mm |
| **3** | 5.5×5.0mm |
| **4** | 7.5×5.5mm |
| **5** | 7.5×7.5mm (DC630V, DC1kV: 7.5×8.0mm) |
| **U** | 7.7×12.5mm (DC630V, DC1kV: 7.7×13.0mm) |
| **W** | 5.5×7.5mm |

❽Lead Style

| Code | Lead Style | Lead Spacing |
|---|---|---|
| **A2** | Straight Long | 2.5mm |
| **B1** | Straight Long | 5.0mm |
| **DB** | Straight Taping | 2.5mm |
| **E1/E2** | Straight Taping | 5.0mm |
| **K1** | Inside Crimp | 5.0mm |
| **M1/M2** | Inside Crimp Taping | 5.0mm |
| **P1** | Outside Crimp | 2.5mm |
| **S1/S2** | Outside Crimp Taping | 2.5mm |

Lead distance between reference and bottom planes.
M1, S1, DB : $H_0$ = 16.0±0.5mm
M2, S2 : $H_0$ = 20.0±0.5mm
E1 : H = 17.5±0.5mm
E2 : H = 20.0±0.5mm

❾Individual Specification Code
Expressed by three figures

❿Packaging

| Code | Packaging |
|---|---|
| **A** | Ammo Pack |
| **B** | Bulk |

# Radial Lead Type Monolithic Ceramic Capacitors

muRata

## RCE Series 125°C max. (for Automotive) (DC25V-DC1kV)

### ■ Features

1. Small size and large capacitance
2. Low ESR and ESL suitable for high frequency
3. Meet AEC-Q200, ISO7637-2 (surge test) requirement
4. Meet LF (Lead Free) and HF (Halogen Free)
5. Flow soldering and welding are available.
   (Re-flow soldering is not available.)
6. If copper wire is necessary at welding process,
   copper wire is available based on request.

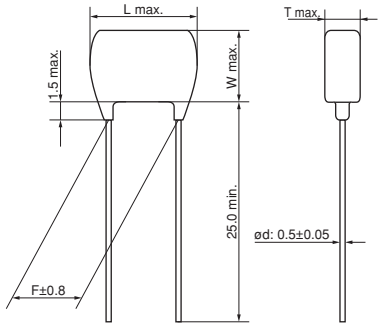


**Dimensions code: 0**
**Lead style code: A2**

· Lead Wire: Solder Coated CP Wire

(in mm)

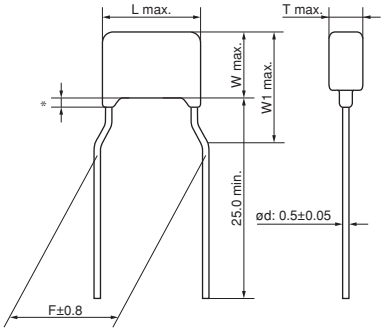


**Dimensions code: 0**
**Lead style code: K1**

∗ Coating extension does not exceed the end of the lead bend.
· Lead Wire: Solder Coated CP Wire

(in mm)

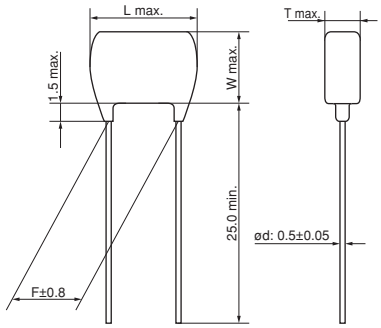


**Dimensions code: 1**
**Lead style code: A2**

· Lead Wire: Solder Coated CP Wire

(in mm)

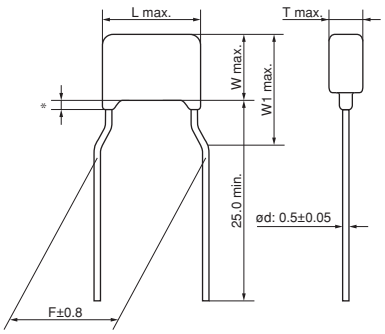


**Dimensions code: 1**
**Lead style code: K1**

∗ Coating extension does not exceed the end of the lead bend.
· Lead Wire: Solder Coated CP Wire

(in mm)

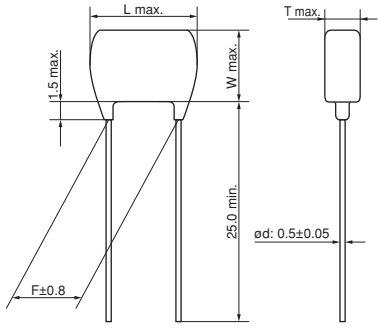


**Dimensions code: 2**
**Lead style code: A2**

· Lead Wire: Solder Coated CP Wire

(in mm)

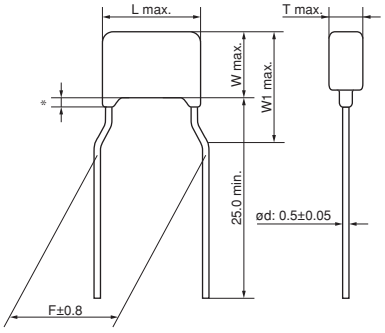


**Dimensions code: 2**
**Lead style code: K1**

∗ Coating extension does not exceed the end of the lead bend.
· Lead Wire: Solder Coated CP Wire

(in mm)

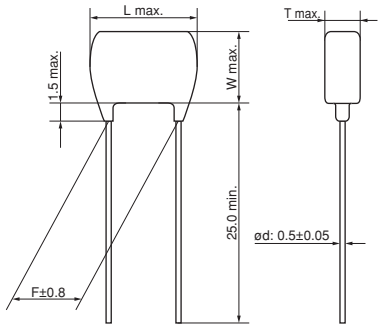


**Dimensions code: 3**
**Lead style code: A2**

· Lead Wire: Solder Coated CP Wire

(in mm)

Continued on the following page. ↗

Continued from the preceding page.

Dimensions code: 3
Lead style code: K1

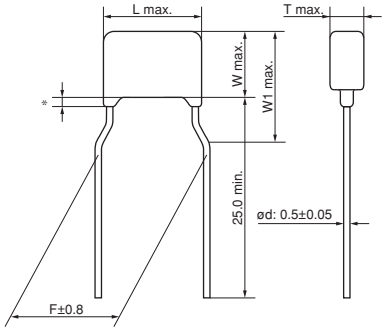


∗ Coating extension does not exceed the end of the lead bend.
· Lead Wire: Solder Coated CP Wire

(in mm)

Dimensions code: 4
Lead style code: K1

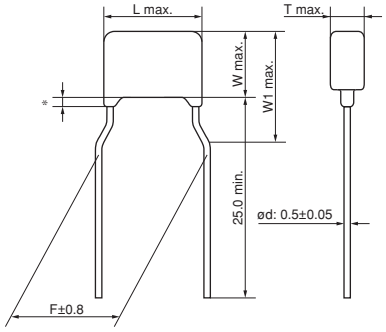


∗ Coating extension does not exceed the end of the lead bend.
· Lead Wire: Solder Coated CP Wire

(in mm)

Dimensions code: 5
Lead style code: B1

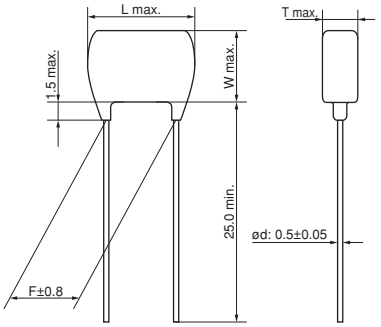


· Lead Wire: Solder Coated CP Wire

(in mm)

Dimensions code: U
Lead style code: B1

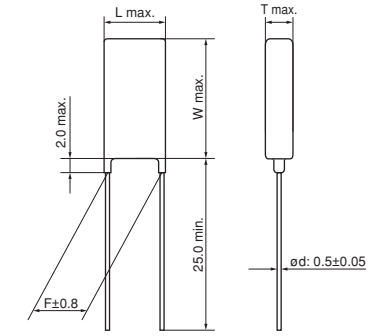


· Lead Wire: Solder Coated CP Wire

(in mm)

Dimensions code: W
Lead style code: K1

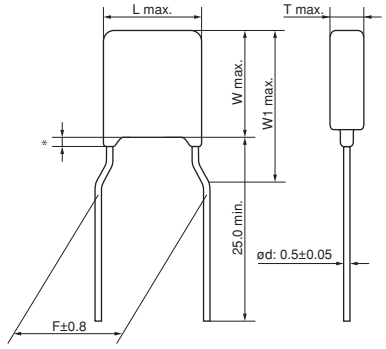


∗ Coating extension does not exceed the end of the lead bend.
· Lead Wire: Solder Coated CP Wire

(in mm)

## ■ Dimensions

| Dimensions and Lead Style Code | Dimensions (mm) | | | | | |
|---|---|---|---|---|---|---|
| | L | W | W1 | T | F | d |
| **0A2/0DB** | 3.6 | 3.5 | - | See the individual product specification | 2.5 | 0.5 |
| **0K1/0M1** | 3.6 | 3.5 | 6.0 | | 5.0 | 0.5 |
| **1A2/1DB** | 4.0 | 3.5 | - | | 2.5 | 0.5 |
| **1K1/1M1** | 4.0 | 3.5 | 5.0 | | 5.0 | 0.5 |
| **2A2/2DB** | 5.5 | 4.0 | - | | 2.5 | 0.5 |
| **2K1/2M1** | 5.5 | 4.0 | 6.0 | | 5.0 | 0.5 |
| **3A2/3DB** | 5.5 | 5.0 | - | | 2.5 | 0.5 |
| **3K1/3M1** | 5.5 | 5.0 | 7.5 | | 5.0 | 0.5 |
| **4K1/4M1** | 7.5 | 5.5 | 8.0 | | 5.0 | 0.5 |
| **5B1/5E1** | 7.5 | 7.5* | - | | 5.0 | 0.5 |
| **UB1/UE1** | 7.7 | 12.5* | - | | 5.0 | 0.5 |
| **WK1/WM1** | 5.5 | 7.5 | 10.0 | | 5.0 | 0.5 |

*DC630V, DC1kV: W+0.5mm

## ■ Marking

| Dimensions Code \ Rated Voltage | DC25V | | DC50V | | | DC100V | | | DC250V | DC630V | DC1kV |
|---|---|---|---|---|---|---|---|---|---|---|---|
| Temp. Char. | X7S | X7R | C0G | X7S | X7R | C0G | X7S | X7R | X7R, U2J | | |
| 0 | 224K | 104K | A 102J | – | 224K | A 102J | – | 224K | – | – | – |
| 1 | | – | | – | | | – | | U 102J | – | – |
| 2 | Ⓜ 475 K2C | – | – | Ⓜ 475 K5C | Ⓜ 105 K5C | – | – | Ⓜ 105 K1C | Ⓜ 103 J4U (U2J)<br>Ⓜ 473 K4C (X7R) | Ⓜ 472 J7U (U2J)<br>Ⓜ 153 K7C (X7R) | Ⓜ 102 JAU (U2J)<br>Ⓜ 102 KAC (X7R) |
| 3, 4, W | Ⓜ 226 K2C | – | – | – | Ⓜ 335 K5C | – | Ⓜ 225 K1C | – | Ⓜ 473 J4U (U2J)<br>Ⓜ 224 K4C (X7R) | Ⓜ 103 J7U (U2J)<br>Ⓜ 104 K7C (X7R) | Ⓜ 472 JAU (U2J)<br>Ⓜ 333 KAC (X7R) |
| 5, U | – | – | – | – | – | – | – | – | – | Ⓜ 333 J7U (U2J)<br>Ⓜ 474 K4C (X7R) | Ⓜ 103 JAU (U2J)<br>Ⓜ 474 M7C (X7R) |

| | |
|---|---|
| Temperature Characteristics | Marked with code (C0G char.: A, X7S/X7R char.: C, U2J char.: U)<br>A part is omitted (Please refer to the marking example.) |
| Nominal Capacitance | Under 100pF: Actual value 100pF and over: Marked with 3 figures |
| Capacitance Tolerance | Marked with code<br>A part is omitted (Please refer to the marking example.) |
| Rated Voltage | Marked with code (DC25V: 2, DC50V: 5, DC100V: 1, DC250V: 4, DC630V: 7, DC1kV: A)<br>A part is omitted (Please refer to the marking example.) |
| Manufacturer's Identification | Marked with Ⓜ<br>A part is omitted (Please refer to the marking example.) |

## Temperature Compensating Type, C0G/U2J Characteristics

| Part Number | Temp. Char. | Rated Voltage | Capacitance | Dimensions LxW (mm) | Dimension T (mm) | Lead Space F (mm) | Lead Style Code Bulk | Lead Style Code Taping |
|---|---|---|---|---|---|---|---|---|
| **RCE5C1H1R0C0□□H03□** | C0G (EIA) | 50Vdc | 1.0pF±5% | 3.6×3.5 | 2.5 | 2.5 | A2 | DB |
| **RCE5C1H1R0C0□□H03□** | C0G (EIA) | 50Vdc | 1.0pF±5% | 3.6×3.5 | 2.5 | 5.0 | K1 | M1 |
| **RCE5C1H2R0C0□□H03□** | C0G (EIA) | 50Vdc | 2.0pF±5% | 3.6×3.5 | 2.5 | 2.5 | A2 | DB |
| **RCE5C1H2R0C0□□H03□** | C0G (EIA) | 50Vdc | 2.0pF±5% | 3.6×3.5 | 2.5 | 5.0 | K1 | M1 |
| **RCE5C1H3R0C0□□H03□** | C0G (EIA) | 50Vdc | 3.0pF±5% | 3.6×3.5 | 2.5 | 2.5 | A2 | DB |
| **RCE5C1H3R0C0□□H03□** | C0G (EIA) | 50Vdc | 3.0pF±5% | 3.6×3.5 | 2.5 | 5.0 | K1 | M1 |
| **RCE5C1H4R0C0□□H03□** | C0G (EIA) | 50Vdc | 4.0pF±5% | 3.6×3.5 | 2.5 | 2.5 | A2 | DB |
| **RCE5C1H4R0C0□□H03□** | C0G (EIA) | 50Vdc | 4.0pF±5% | 3.6×3.5 | 2.5 | 5.0 | K1 | M1 |
| **RCE5C1H5R0C0□□H03□** | C0G (EIA) | 50Vdc | 5.0pF±5% | 3.6×3.5 | 2.5 | 2.5 | A2 | DB |
| **RCE5C1H5R0C0□□H03□** | C0G (EIA) | 50Vdc | 5.0pF±5% | 3.6×3.5 | 2.5 | 5.0 | K1 | M1 |
| **RCE5C1H6R0D0□□H03□** | C0G (EIA) | 50Vdc | 6.0pF±5% | 3.6×3.5 | 2.5 | 2.5 | A2 | DB |
| **RCE5C1H6R0D0□□H03□** | C0G (EIA) | 50Vdc | 6.0pF±5% | 3.6×3.5 | 2.5 | 5.0 | K1 | M1 |
| **RCE5C1H7R0D0□□H03□** | C0G (EIA) | 50Vdc | 7.0pF±5% | 3.6×3.5 | 2.5 | 2.5 | A2 | DB |
| **RCE5C1H7R0D0□□H03□** | C0G (EIA) | 50Vdc | 7.0pF±5% | 3.6×3.5 | 2.5 | 5.0 | K1 | M1 |
| **RCE5C1H8R0D0□□H03□** | C0G (EIA) | 50Vdc | 8.0pF±5% | 3.6×3.5 | 2.5 | 2.5 | A2 | DB |

Continued on the following page.

Continued from the preceding page.

| Part Number | Temp. Char. | Rated Voltage | Capacitance | Dimensions LxW (mm) | Dimension T (mm) | Lead Space F (mm) | Lead Style Code Bulk | Lead Style Code Taping |
|---|---|---|---|---|---|---|---|---|
| **RCE5C1H8R0D0□□H03□** | C0G (EIA) | 50Vdc | 8.0pF±5% | 3.6×3.5 | 2.5 | 5.0 | K1 | M1 |
| **RCE5C1H9R0D0□□H03□** | C0G (EIA) | 50Vdc | 9.0pF±5% | 3.6×3.5 | 2.5 | 2.5 | A2 | DB |
| **RCE5C1H9R0D0□□H03□** | C0G (EIA) | 50Vdc | 9.0pF±5% | 3.6×3.5 | 2.5 | 5.0 | K1 | M1 |
| **RCE5C1H100J0□□H03□** | C0G (EIA) | 50Vdc | 10pF±5% | 3.6×3.5 | 2.5 | 2.5 | A2 | DB |
| **RCE5C1H100J0□□H03□** | C0G (EIA) | 50Vdc | 10pF±5% | 3.6×3.5 | 2.5 | 5.0 | K1 | M1 |
| **RCE5C1H120J0□□H03□** | C0G (EIA) | 50Vdc | 12pF±5% | 3.6×3.5 | 2.5 | 2.5 | A2 | DB |
| **RCE5C1H120J0□□H03□** | C0G (EIA) | 50Vdc | 12pF±5% | 3.6×3.5 | 2.5 | 5.0 | K1 | M1 |
| **RCE5C1H150J0□□H03□** | C0G (EIA) | 50Vdc | 15pF±5% | 3.6×3.5 | 2.5 | 2.5 | A2 | DB |
| **RCE5C1H150J0□□H03□** | C0G (EIA) | 50Vdc | 15pF±5% | 3.6×3.5 | 2.5 | 5.0 | K1 | M1 |
| **RCE5C1H180J0□□H03□** | C0G (EIA) | 50Vdc | 18pF±5% | 3.6×3.5 | 2.5 | 2.5 | A2 | DB |
| **RCE5C1H180J0□□H03□** | C0G (EIA) | 50Vdc | 18pF±5% | 3.6×3.5 | 2.5 | 5.0 | K1 | M1 |
| **RCE5C1H220J0□□H03□** | C0G (EIA) | 50Vdc | 22pF±5% | 3.6×3.5 | 2.5 | 2.5 | A2 | DB |
| **RCE5C1H220J0□□H03□** | C0G (EIA) | 50Vdc | 22pF±5% | 3.6×3.5 | 2.5 | 5.0 | K1 | M1 |
| **RCE5C1H270J0□□H03□** | C0G (EIA) | 50Vdc | 27pF±5% | 3.6×3.5 | 2.5 | 2.5 | A2 | DB |
| **RCE5C1H270J0□□H03□** | C0G (EIA) | 50Vdc | 27pF±5% | 3.6×3.5 | 2.5 | 5.0 | K1 | M1 |
| **RCE5C1H330J0□□H03□** | C0G (EIA) | 50Vdc | 33pF±5% | 3.6×3.5 | 2.5 | 2.5 | A2 | DB |
| **RCE5C1H330J0□□H03□** | C0G (EIA) | 50Vdc | 33pF±5% | 3.6×3.5 | 2.5 | 5.0 | K1 | M1 |
| **RCE5C1H390J0□□H03□** | C0G (EIA) | 50Vdc | 39pF±5% | 3.6×3.5 | 2.5 | 2.5 | A2 | DB |
| **RCE5C1H390J0□□H03□** | C0G (EIA) | 50Vdc | 39pF±5% | 3.6×3.5 | 2.5 | 5.0 | K1 | M1 |
| **RCE5C1H470J0□□H03□** | C0G (EIA) | 50Vdc | 47pF±5% | 3.6×3.5 | 2.5 | 2.5 | A2 | DB |
| **RCE5C1H470J0□□H03□** | C0G (EIA) | 50Vdc | 47pF±5% | 3.6×3.5 | 2.5 | 5.0 | K1 | M1 |
| **RCE5C1H560J0□□H03□** | C0G (EIA) | 50Vdc | 56pF±5% | 3.6×3.5 | 2.5 | 2.5 | A2 | DB |
| **RCE5C1H560J0□□H03□** | C0G (EIA) | 50Vdc | 56pF±5% | 3.6×3.5 | 2.5 | 5.0 | K1 | M1 |
| **RCE5C1H680J0□□H03□** | C0G (EIA) | 50Vdc | 68pF±5% | 3.6×3.5 | 2.5 | 2.5 | A2 | DB |
| **RCE5C1H680J0□□H03□** | C0G (EIA) | 50Vdc | 68pF±5% | 3.6×3.5 | 2.5 | 5.0 | K1 | M1 |
| **RCE5C1H820J0□□H03□** | C0G (EIA) | 50Vdc | 82pF±5% | 3.6×3.5 | 2.5 | 2.5 | A2 | DB |
| **RCE5C1H820J0□□H03□** | C0G (EIA) | 50Vdc | 82pF±5% | 3.6×3.5 | 2.5 | 5.0 | K1 | M1 |
| **RCE5C1H101J0□□H03□** | C0G (EIA) | 50Vdc | 100pF±5% | 3.6×3.5 | 2.5 | 2.5 | A2 | DB |
| **RCE5C1H101J0□□H03□** | C0G (EIA) | 50Vdc | 100pF±5% | 3.6×3.5 | 2.5 | 5.0 | K1 | M1 |
| **RCE5C1H121J0□□H03□** | C0G (EIA) | 50Vdc | 120pF±5% | 3.6×3.5 | 2.5 | 2.5 | A2 | DB |
| **RCE5C1H121J0□□H03□** | C0G (EIA) | 50Vdc | 120pF±5% | 3.6×3.5 | 2.5 | 5.0 | K1 | M1 |
| **RCE5C1H151J0□□H03□** | C0G (EIA) | 50Vdc | 150pF±5% | 3.6×3.5 | 2.5 | 2.5 | A2 | DB |
| **RCE5C1H151J0□□H03□** | C0G (EIA) | 50Vdc | 150pF±5% | 3.6×3.5 | 2.5 | 5.0 | K1 | M1 |
| **RCE5C1H181J0□□H03□** | C0G (EIA) | 50Vdc | 180pF±5% | 3.6×3.5 | 2.5 | 2.5 | A2 | DB |
| **RCE5C1H181J0□□H03□** | C0G (EIA) | 50Vdc | 180pF±5% | 3.6×3.5 | 2.5 | 5.0 | K1 | M1 |
| **RCE5C1H221J0□□H03□** | C0G (EIA) | 50Vdc | 220pF±5% | 3.6×3.5 | 2.5 | 2.5 | A2 | DB |
| **RCE5C1H221J0□□H03□** | C0G (EIA) | 50Vdc | 220pF±5% | 3.6×3.5 | 2.5 | 5.0 | K1 | M1 |
| **RCE5C1H271J0□□H03□** | C0G (EIA) | 50Vdc | 270pF±5% | 3.6×3.5 | 2.5 | 2.5 | A2 | DB |
| **RCE5C1H271J0□□H03□** | C0G (EIA) | 50Vdc | 270pF±5% | 3.6×3.5 | 2.5 | 5.0 | K1 | M1 |
| **RCE5C1H331J0□□H03□** | C0G (EIA) | 50Vdc | 330pF±5% | 3.6×3.5 | 2.5 | 2.5 | A2 | DB |
| **RCE5C1H331J0□□H03□** | C0G (EIA) | 50Vdc | 330pF±5% | 3.6×3.5 | 2.5 | 5.0 | K1 | M1 |
| **RCE5C1H391J0□□H03□** | C0G (EIA) | 50Vdc | 390pF±5% | 3.6×3.5 | 2.5 | 2.5 | A2 | DB |
| **RCE5C1H391J0□□H03□** | C0G (EIA) | 50Vdc | 390pF±5% | 3.6×3.5 | 2.5 | 5.0 | K1 | M1 |
| **RCE5C1H471J0□□H03□** | C0G (EIA) | 50Vdc | 470pF±5% | 3.6×3.5 | 2.5 | 2.5 | A2 | DB |
| **RCE5C1H471J0□□H03□** | C0G (EIA) | 50Vdc | 470pF±5% | 3.6×3.5 | 2.5 | 5.0 | K1 | M1 |
| **RCE5C1H561J0□□H03□** | C0G (EIA) | 50Vdc | 560pF±5% | 3.6×3.5 | 2.5 | 2.5 | A2 | DB |
| **RCE5C1H561J0□□H03□** | C0G (EIA) | 50Vdc | 560pF±5% | 3.6×3.5 | 2.5 | 5.0 | K1 | M1 |
| **RCE5C1H681J0□□H03□** | C0G (EIA) | 50Vdc | 680pF±5% | 3.6×3.5 | 2.5 | 2.5 | A2 | DB |
| **RCE5C1H681J0□□H03□** | C0G (EIA) | 50Vdc | 680pF±5% | 3.6×3.5 | 2.5 | 5.0 | K1 | M1 |
| **RCE5C1H821J0□□H03□** | C0G (EIA) | 50Vdc | 820pF±5% | 3.6×3.5 | 2.5 | 2.5 | A2 | DB |
| **RCE5C1H821J0□□H03□** | C0G (EIA) | 50Vdc | 820pF±5% | 3.6×3.5 | 2.5 | 5.0 | K1 | M1 |
| **RCE5C1H102J0□□H03□** | C0G (EIA) | 50Vdc | 1000pF±5% | 3.6×3.5 | 2.5 | 2.5 | A2 | DB |
| **RCE5C1H102J0□□H03□** | C0G (EIA) | 50Vdc | 1000pF±5% | 3.6×3.5 | 2.5 | 5.0 | K1 | M1 |
| **RCE5C1H122J0□□H03□** | C0G (EIA) | 50Vdc | 1200pF±5% | 3.6×3.5 | 2.5 | 2.5 | A2 | DB |
| **RCE5C1H122J0□□H03□** | C0G (EIA) | 50Vdc | 1200pF±5% | 3.6×3.5 | 2.5 | 5.0 | K1 | M1 |
| **RCE5C1H152J0□□H03□** | C0G (EIA) | 50Vdc | 1500pF±5% | 3.6×3.5 | 2.5 | 2.5 | A2 | DB |
| **RCE5C1H152J0□□H03□** | C0G (EIA) | 50Vdc | 1500pF±5% | 3.6×3.5 | 2.5 | 5.0 | K1 | M1 |

Continued on the following page.

Continued from the preceding page.

| Part Number | Temp. Char. | Rated Voltage | Capacitance | Dimensions LxW (mm) | Dimension T (mm) | Lead Space F (mm) | Lead Style Code Bulk | Lead Style Code Taping |
|---|---|---|---|---|---|---|---|---|
| **RCE5C1H182J0□□H03□** | C0G (EIA) | 50Vdc | 1800pF±5% | 3.6×3.5 | 2.5 | 2.5 | A2 | DB |
| **RCE5C1H182J0□□H03□** | C0G (EIA) | 50Vdc | 1800pF±5% | 3.6×3.5 | 2.5 | 5.0 | K1 | M1 |
| **RCE5C1H222J0□□H03□** | C0G (EIA) | 50Vdc | 2200pF±5% | 3.6×3.5 | 2.5 | 2.5 | A2 | DB |
| **RCE5C1H222J0□□H03□** | C0G (EIA) | 50Vdc | 2200pF±5% | 3.6×3.5 | 2.5 | 5.0 | K1 | M1 |
| **RCE5C1H272J0□□H03□** | C0G (EIA) | 50Vdc | 2700pF±5% | 3.6×3.5 | 2.5 | 2.5 | A2 | DB |
| **RCE5C1H272J0□□H03□** | C0G (EIA) | 50Vdc | 2700pF±5% | 3.6×3.5 | 2.5 | 5.0 | K1 | M1 |
| **RCE5C1H332J0□□H03□** | C0G (EIA) | 50Vdc | 3300pF±5% | 3.6×3.5 | 2.5 | 2.5 | A2 | DB |
| **RCE5C1H332J0□□H03□** | C0G (EIA) | 50Vdc | 3300pF±5% | 3.6×3.5 | 2.5 | 5.0 | K1 | M1 |
| **RCE5C1H392J0□□H03□** | C0G (EIA) | 50Vdc | 3900pF±5% | 3.6×3.5 | 2.5 | 2.5 | A2 | DB |
| **RCE5C1H392J0□□H03□** | C0G (EIA) | 50Vdc | 3900pF±5% | 3.6×3.5 | 2.5 | 5.0 | K1 | M1 |
| **RCE5C1H472J1□□H03□** | C0G (EIA) | 50Vdc | 4700pF±5% | 4.0×3.5 | 2.5 | 2.5 | A2 | DB |
| **RCE5C1H472J1□□H03□** | C0G (EIA) | 50Vdc | 4700pF±5% | 4.0×3.5 | 2.5 | 5.0 | K1 | M1 |
| **RCE5C1H562J1□□H03□** | C0G (EIA) | 50Vdc | 5600pF±5% | 4.0×3.5 | 2.5 | 2.5 | A2 | DB |
| **RCE5C1H562J1□□H03□** | C0G (EIA) | 50Vdc | 5600pF±5% | 4.0×3.5 | 2.5 | 5.0 | K1 | M1 |
| **RCE5C1H682J1□□H03□** | C0G (EIA) | 50Vdc | 6800pF±5% | 4.0×3.5 | 2.5 | 2.5 | A2 | DB |
| **RCE5C1H682J1□□H03□** | C0G (EIA) | 50Vdc | 6800pF±5% | 4.0×3.5 | 2.5 | 5.0 | K1 | M1 |
| **RCE5C1H822J1□□H03□** | C0G (EIA) | 50Vdc | 8200pF±5% | 4.0×3.5 | 2.5 | 2.5 | A2 | DB |
| **RCE5C1H822J1□□H03□** | C0G (EIA) | 50Vdc | 8200pF±5% | 4.0×3.5 | 2.5 | 5.0 | K1 | M1 |
| **RCE5C1H103J1□□H03□** | C0G (EIA) | 50Vdc | 10000pF±5% | 4.0×3.5 | 2.5 | 2.5 | A2 | DB |
| **RCE5C1H103J1□□H03□** | C0G (EIA) | 50Vdc | 10000pF±5% | 4.0×3.5 | 2.5 | 5.0 | K1 | M1 |
| **RCE5C1H123J1□□H03□** | C0G (EIA) | 50Vdc | 12000pF±5% | 4.0×3.5 | 2.5 | 2.5 | A2 | DB |
| **RCE5C1H123J1□□H03□** | C0G (EIA) | 50Vdc | 12000pF±5% | 4.0×3.5 | 2.5 | 5.0 | K1 | M1 |
| **RCE5C1H153J1□□H03□** | C0G (EIA) | 50Vdc | 15000pF±5% | 4.0×3.5 | 2.5 | 2.5 | A2 | DB |
| **RCE5C1H153J1□□H03□** | C0G (EIA) | 50Vdc | 15000pF±5% | 4.0×3.5 | 2.5 | 5.0 | K1 | M1 |
| **RCE5C1H183J1□□H03□** | C0G (EIA) | 50Vdc | 18000pF±5% | 4.0×3.5 | 2.5 | 2.5 | A2 | DB |
| **RCE5C1H183J1□□H03□** | C0G (EIA) | 50Vdc | 18000pF±5% | 4.0×3.5 | 2.5 | 5.0 | K1 | M1 |
| **RCE5C1H223J1□□H03□** | C0G (EIA) | 50Vdc | 22000pF±5% | 4.0×3.5 | 2.5 | 2.5 | A2 | DB |
| **RCE5C1H223J1□□H03□** | C0G (EIA) | 50Vdc | 22000pF±5% | 4.0×3.5 | 2.5 | 5.0 | K1 | M1 |
| **RCE5C2A1R0C0□□H03□** | C0G (EIA) | 100Vdc | 1.0pF±5% | 3.6×3.5 | 2.5 | 2.5 | A2 | DB |
| **RCE5C2A1R0C0□□H03□** | C0G (EIA) | 100Vdc | 1.0pF±5% | 3.6×3.5 | 2.5 | 5.0 | K1 | M1 |
| **RCE5C2A2R0C0□□H03□** | C0G (EIA) | 100Vdc | 2.0pF±5% | 3.6×3.5 | 2.5 | 2.5 | A2 | DB |
| **RCE5C2A2R0C0□□H03□** | C0G (EIA) | 100Vdc | 2.0pF±5% | 3.6×3.5 | 2.5 | 5.0 | K1 | M1 |
| **RCE5C2A3R0C0□□H03□** | C0G (EIA) | 100Vdc | 3.0pF±5% | 3.6×3.5 | 2.5 | 2.5 | A2 | DB |
| **RCE5C2A3R0C0□□H03□** | C0G (EIA) | 100Vdc | 3.0pF±5% | 3.6×3.5 | 2.5 | 5.0 | K1 | M1 |
| **RCE5C2A4R0C0□□H03□** | C0G (EIA) | 100Vdc | 4.0pF±5% | 3.6×3.5 | 2.5 | 2.5 | A2 | DB |
| **RCE5C2A4R0C0□□H03□** | C0G (EIA) | 100Vdc | 4.0pF±5% | 3.6×3.5 | 2.5 | 5.0 | K1 | M1 |
| **RCE5C2A5R0C0□□H03□** | C0G (EIA) | 100Vdc | 5.0pF±5% | 3.6×3.5 | 2.5 | 2.5 | A2 | DB |
| **RCE5C2A5R0C0□□H03□** | C0G (EIA) | 100Vdc | 5.0pF±5% | 3.6×3.5 | 2.5 | 5.0 | K1 | M1 |
| **RCE5C2A6R0D0□□H03□** | C0G (EIA) | 100Vdc | 6.0pF±5% | 3.6×3.5 | 2.5 | 2.5 | A2 | DB |
| **RCE5C2A6R0D0□□H03□** | C0G (EIA) | 100Vdc | 6.0pF±5% | 3.6×3.5 | 2.5 | 5.0 | K1 | M1 |
| **RCE5C2A7R0D0□□H03□** | C0G (EIA) | 100Vdc | 7.0pF±5% | 3.6×3.5 | 2.5 | 2.5 | A2 | DB |
| **RCE5C2A7R0D0□□H03□** | C0G (EIA) | 100Vdc | 7.0pF±5% | 3.6×3.5 | 2.5 | 5.0 | K1 | M1 |
| **RCE5C2A8R0D0□□H03□** | C0G (EIA) | 100Vdc | 8.0pF±5% | 3.6×3.5 | 2.5 | 2.5 | A2 | DB |
| **RCE5C2A8R0D0□□H03□** | C0G (EIA) | 100Vdc | 8.0pF±5% | 3.6×3.5 | 2.5 | 5.0 | K1 | M1 |
| **RCE5C2A9R0D0□□H03□** | C0G (EIA) | 100Vdc | 9.0pF±5% | 3.6×3.5 | 2.5 | 2.5 | A2 | DB |
| **RCE5C2A9R0D0□□H03□** | C0G (EIA) | 100Vdc | 9.0pF±5% | 3.6×3.5 | 2.5 | 5.0 | K1 | M1 |
| **RCE5C2A100J0□□H03□** | C0G (EIA) | 100Vdc | 10pF±5% | 3.6×3.5 | 2.5 | 2.5 | A2 | DB |
| **RCE5C2A100J0□□H03□** | C0G (EIA) | 100Vdc | 10pF±5% | 3.6×3.5 | 2.5 | 5.0 | K1 | M1 |
| **RCE5C2A120J0□□H03□** | C0G (EIA) | 100Vdc | 12pF±5% | 3.6×3.5 | 2.5 | 2.5 | A2 | DB |
| **RCE5C2A120J0□□H03□** | C0G (EIA) | 100Vdc | 12pF±5% | 3.6×3.5 | 2.5 | 5.0 | K1 | M1 |
| **RCE5C2A150J0□□H03□** | C0G (EIA) | 100Vdc | 15pF±5% | 3.6×3.5 | 2.5 | 2.5 | A2 | DB |
| **RCE5C2A150J0□□H03□** | C0G (EIA) | 100Vdc | 15pF±5% | 3.6×3.5 | 2.5 | 5.0 | K1 | M1 |
| **RCE5C2A180J0□□H03□** | C0G (EIA) | 100Vdc | 18pF±5% | 3.6×3.5 | 2.5 | 2.5 | A2 | DB |
| **RCE5C2A180J0□□H03□** | C0G (EIA) | 100Vdc | 18pF±5% | 3.6×3.5 | 2.5 | 5.0 | K1 | M1 |
| **RCE5C2A220J0□□H03□** | C0G (EIA) | 100Vdc | 22pF±5% | 3.6×3.5 | 2.5 | 2.5 | A2 | DB |
| **RCE5C2A220J0□□H03□** | C0G (EIA) | 100Vdc | 22pF±5% | 3.6×3.5 | 2.5 | 5.0 | K1 | M1 |
| **RCE5C2A270J0□□H03□** | C0G (EIA) | 100Vdc | 27pF±5% | 3.6×3.5 | 2.5 | 2.5 | A2 | DB |

Continued on the following page.

Continued from the preceding page.

| Part Number | Temp. Char. | Rated Voltage | Capacitance | Dimensions LxW (mm) | Dimension T (mm) | Lead Space F (mm) | Lead Style Code Bulk | Lead Style Code Taping |
|---|---|---|---|---|---|---|---|---|
| **RCE5C2A270J0□□H03□** | C0G (EIA) | 100Vdc | 27pF±5% | 3.6×3.5 | 2.5 | 5.0 | K1 | M1 |
| **RCE5C2A330J0□□H03□** | C0G (EIA) | 100Vdc | 33pF±5% | 3.6×3.5 | 2.5 | 2.5 | A2 | DB |
| **RCE5C2A330J0□□H03□** | C0G (EIA) | 100Vdc | 33pF±5% | 3.6×3.5 | 2.5 | 5.0 | K1 | M1 |
| **RCE5C2A390J0□□H03□** | C0G (EIA) | 100Vdc | 39pF±5% | 3.6×3.5 | 2.5 | 2.5 | A2 | DB |
| **RCE5C2A390J0□□H03□** | C0G (EIA) | 100Vdc | 39pF±5% | 3.6×3.5 | 2.5 | 5.0 | K1 | M1 |
| **RCE5C2A470J0□□H03□** | C0G (EIA) | 100Vdc | 47pF±5% | 3.6×3.5 | 2.5 | 2.5 | A2 | DB |
| **RCE5C2A470J0□□H03□** | C0G (EIA) | 100Vdc | 47pF±5% | 3.6×3.5 | 2.5 | 5.0 | K1 | M1 |
| **RCE5C2A560J0□□H03□** | C0G (EIA) | 100Vdc | 56pF±5% | 3.6×3.5 | 2.5 | 2.5 | A2 | DB |
| **RCE5C2A560J0□□H03□** | C0G (EIA) | 100Vdc | 56pF±5% | 3.6×3.5 | 2.5 | 5.0 | K1 | M1 |
| **RCE5C2A680J0□□H03□** | C0G (EIA) | 100Vdc | 68pF±5% | 3.6×3.5 | 2.5 | 2.5 | A2 | DB |
| **RCE5C2A680J0□□H03□** | C0G (EIA) | 100Vdc | 68pF±5% | 3.6×3.5 | 2.5 | 5.0 | K1 | M1 |
| **RCE5C2A820J0□□H03□** | C0G (EIA) | 100Vdc | 82pF±5% | 3.6×3.5 | 2.5 | 2.5 | A2 | DB |
| **RCE5C2A820J0□□H03□** | C0G (EIA) | 100Vdc | 82pF±5% | 3.6×3.5 | 2.5 | 5.0 | K1 | M1 |
| **RCE5C2A101J0□□H03□** | C0G (EIA) | 100Vdc | 100pF±5% | 3.6×3.5 | 2.5 | 2.5 | A2 | DB |
| **RCE5C2A101J0□□H03□** | C0G (EIA) | 100Vdc | 100pF±5% | 3.6×3.5 | 2.5 | 5.0 | K1 | M1 |
| **RCE5C2A121J0□□H03□** | C0G (EIA) | 100Vdc | 120pF±5% | 3.6×3.5 | 2.5 | 2.5 | A2 | DB |
| **RCE5C2A121J0□□H03□** | C0G (EIA) | 100Vdc | 120pF±5% | 3.6×3.5 | 2.5 | 5.0 | K1 | M1 |
| **RCE5C2A151J0□□H03□** | C0G (EIA) | 100Vdc | 150pF±5% | 3.6×3.5 | 2.5 | 2.5 | A2 | DB |
| **RCE5C2A151J0□□H03□** | C0G (EIA) | 100Vdc | 150pF±5% | 3.6×3.5 | 2.5 | 5.0 | K1 | M1 |
| **RCE5C2A181J0□□H03□** | C0G (EIA) | 100Vdc | 180pF±5% | 3.6×3.5 | 2.5 | 2.5 | A2 | DB |
| **RCE5C2A181J0□□H03□** | C0G (EIA) | 100Vdc | 180pF±5% | 3.6×3.5 | 2.5 | 5.0 | K1 | M1 |
| **RCE5C2A221J0□□H03□** | C0G (EIA) | 100Vdc | 220pF±5% | 3.6×3.5 | 2.5 | 2.5 | A2 | DB |
| **RCE5C2A221J0□□H03□** | C0G (EIA) | 100Vdc | 220pF±5% | 3.6×3.5 | 2.5 | 5.0 | K1 | M1 |
| **RCE5C2A271J0□□H03□** | C0G (EIA) | 100Vdc | 270pF±5% | 3.6×3.5 | 2.5 | 2.5 | A2 | DB |
| **RCE5C2A271J0□□H03□** | C0G (EIA) | 100Vdc | 270pF±5% | 3.6×3.5 | 2.5 | 5.0 | K1 | M1 |
| **RCE5C2A331J0□□H03□** | C0G (EIA) | 100Vdc | 330pF±5% | 3.6×3.5 | 2.5 | 2.5 | A2 | DB |
| **RCE5C2A331J0□□H03□** | C0G (EIA) | 100Vdc | 330pF±5% | 3.6×3.5 | 2.5 | 5.0 | K1 | M1 |
| **RCE5C2A391J0□□H03□** | C0G (EIA) | 100Vdc | 390pF±5% | 3.6×3.5 | 2.5 | 2.5 | A2 | DB |
| **RCE5C2A391J0□□H03□** | C0G (EIA) | 100Vdc | 390pF±5% | 3.6×3.5 | 2.5 | 5.0 | K1 | M1 |
| **RCE5C2A471J0□□H03□** | C0G (EIA) | 100Vdc | 470pF±5% | 3.6×3.5 | 2.5 | 2.5 | A2 | DB |
| **RCE5C2A471J0□□H03□** | C0G (EIA) | 100Vdc | 470pF±5% | 3.6×3.5 | 2.5 | 5.0 | K1 | M1 |
| **RCE5C2A561J0□□H03□** | C0G (EIA) | 100Vdc | 560pF±5% | 3.6×3.5 | 2.5 | 2.5 | A2 | DB |
| **RCE5C2A561J0□□H03□** | C0G (EIA) | 100Vdc | 560pF±5% | 3.6×3.5 | 2.5 | 5.0 | K1 | M1 |
| **RCE5C2A681J0□□H03□** | C0G (EIA) | 100Vdc | 680pF±5% | 3.6×3.5 | 2.5 | 2.5 | A2 | DB |
| **RCE5C2A681J0□□H03□** | C0G (EIA) | 100Vdc | 680pF±5% | 3.6×3.5 | 2.5 | 5.0 | K1 | M1 |
| **RCE5C2A821J0□□H03□** | C0G (EIA) | 100Vdc | 820pF±5% | 3.6×3.5 | 2.5 | 2.5 | A2 | DB |
| **RCE5C2A821J0□□H03□** | C0G (EIA) | 100Vdc | 820pF±5% | 3.6×3.5 | 2.5 | 5.0 | K1 | M1 |
| **RCE5C2A102J0□□H03□** | C0G (EIA) | 100Vdc | 1000pF±5% | 3.6×3.5 | 2.5 | 2.5 | A2 | DB |
| **RCE5C2A102J0□□H03□** | C0G (EIA) | 100Vdc | 1000pF±5% | 3.6×3.5 | 2.5 | 5.0 | K1 | M1 |
| **RCE5C2A122J0□□H03□** | C0G (EIA) | 100Vdc | 1200pF±5% | 3.6×3.5 | 2.5 | 2.5 | A2 | DB |
| **RCE5C2A122J0□□H03□** | C0G (EIA) | 100Vdc | 1200pF±5% | 3.6×3.5 | 2.5 | 5.0 | K1 | M1 |
| **RCE5C2A152J0□□H03□** | C0G (EIA) | 100Vdc | 1500pF±5% | 3.6×3.5 | 2.5 | 2.5 | A2 | DB |
| **RCE5C2A152J0□□H03□** | C0G (EIA) | 100Vdc | 1500pF±5% | 3.6×3.5 | 2.5 | 5.0 | K1 | M1 |
| **RCE5C2A182J1□□H03□** | C0G (EIA) | 100Vdc | 1800pF±5% | 4.0×3.5 | 2.5 | 2.5 | A2 | DB |
| **RCE5C2A182J1□□H03□** | C0G (EIA) | 100Vdc | 1800pF±5% | 4.0×3.5 | 2.5 | 5.0 | K1 | M1 |
| **RCE5C2A222J1□□H03□** | C0G (EIA) | 100Vdc | 2200pF±5% | 4.0×3.5 | 2.5 | 2.5 | A2 | DB |
| **RCE5C2A222J1□□H03□** | C0G (EIA) | 100Vdc | 2200pF±5% | 4.0×3.5 | 2.5 | 5.0 | K1 | M1 |
| **RCE5C2A272J1□□H03□** | C0G (EIA) | 100Vdc | 2700pF±5% | 4.0×3.5 | 2.5 | 2.5 | A2 | DB |
| **RCE5C2A272J1□□H03□** | C0G (EIA) | 100Vdc | 2700pF±5% | 4.0×3.5 | 2.5 | 5.0 | K1 | M1 |
| **RCE5C2A332J1□□H03□** | C0G (EIA) | 100Vdc | 3300pF±5% | 4.0×3.5 | 2.5 | 2.5 | A2 | DB |
| **RCE5C2A332J1□□H03□** | C0G (EIA) | 100Vdc | 3300pF±5% | 4.0×3.5 | 2.5 | 5.0 | K1 | M1 |
| **RCE7U2E101J1□□H03□** | U2J (EIA) | 250Vdc | 100pF±5% | 4.0×3.5 | 3.15 | 5.0 | K1 | M1 |
| **RCE7U2E151J1□□H03□** | U2J (EIA) | 250Vdc | 150pF±5% | 4.0×3.5 | 3.15 | 5.0 | K1 | M1 |
| **RCE7U2E221J1□□H03□** | U2J (EIA) | 250Vdc | 220pF±5% | 4.0×3.5 | 3.15 | 5.0 | K1 | M1 |
| **RCE7U2E331J1□□H03□** | U2J (EIA) | 250Vdc | 330pF±5% | 4.0×3.5 | 3.15 | 5.0 | K1 | M1 |
| **RCE7U2E471J1□□H03□** | U2J (EIA) | 250Vdc | 470pF±5% | 4.0×3.5 | 3.15 | 5.0 | K1 | M1 |
| **RCE7U2E681J1□□H03□** | U2J (EIA) | 250Vdc | 680pF±5% | 4.0×3.5 | 3.15 | 5.0 | K1 | M1 |

Continued on the following page.

Continued from the preceding page.

| Part Number | Temp. Char. | Rated Voltage | Capacitance | Dimensions LxW (mm) | Dimension T (mm) | Lead Space F (mm) | Lead Style Code Bulk | Lead Style Code Taping |
|---|---|---|---|---|---|---|---|---|
| **RCE7U2E102J1□□H03□** | U2J (EIA) | 250Vdc | 1000pF±5% | 4.0×3.5 | 3.15 | 5.0 | K1 | M1 |
| **RCE7U2E152J1□□H03□** | U2J (EIA) | 250Vdc | 1500pF±5% | 4.0×3.5 | 3.15 | 5.0 | K1 | M1 |
| **RCE7U2E222J1□□H03□** | U2J (EIA) | 250Vdc | 2200pF±5% | 4.0×3.5 | 3.15 | 5.0 | K1 | M1 |
| **RCE7U2E332J1□□H03□** | U2J (EIA) | 250Vdc | 3300pF±5% | 4.0×3.5 | 3.15 | 5.0 | K1 | M1 |
| **RCE7U2E472J1□□H03□** | U2J (EIA) | 250Vdc | 4700pF±5% | 4.0×3.5 | 3.15 | 5.0 | K1 | M1 |
| **RCE7U2E682J2□□H03□** | U2J (EIA) | 250Vdc | 6800pF±5% | 5.5×4.0 | 3.15 | 5.0 | K1 | M1 |
| **RCE7U2E103J2□□H03□** | U2J (EIA) | 250Vdc | 10000pF±5% | 5.5×4.0 | 3.15 | 5.0 | K1 | M1 |
| **RCE7U2J100J2□□H03□** | U2J (EIA) | 630Vdc | 10pF±5% | 5.5×4.0 | 3.15 | 5.0 | K1 | M1 |
| **RCE7U2J150J2□□H03□** | U2J (EIA) | 630Vdc | 15pF±5% | 5.5×4.0 | 3.15 | 5.0 | K1 | M1 |
| **RCE7U2J220J2□□H03□** | U2J (EIA) | 630Vdc | 22pF±5% | 5.5×4.0 | 3.15 | 5.0 | K1 | M1 |
| **RCE7U2J330J2□□H03□** | U2J (EIA) | 630Vdc | 33pF±5% | 5.5×4.0 | 3.15 | 5.0 | K1 | M1 |
| **RCE7U2J470J2□□H03□** | U2J (EIA) | 630Vdc | 47pF±5% | 5.5×4.0 | 3.15 | 5.0 | K1 | M1 |
| **RCE7U2J680J2□□H03□** | U2J (EIA) | 630Vdc | 68pF±5% | 5.5×4.0 | 3.15 | 5.0 | K1 | M1 |
| **RCE7U2J101J2□□H03□** | U2J (EIA) | 630Vdc | 100pF±5% | 5.5×4.0 | 3.15 | 5.0 | K1 | M1 |
| **RCE7U2J151J2□□H03□** | U2J (EIA) | 630Vdc | 150pF±5% | 5.5×4.0 | 3.15 | 5.0 | K1 | M1 |
| **RCE7U2J221J2□□H03□** | U2J (EIA) | 630Vdc | 220pF±5% | 5.5×4.0 | 3.15 | 5.0 | K1 | M1 |
| **RCE7U2J331J2□□H03□** | U2J (EIA) | 630Vdc | 330pF±5% | 5.5×4.0 | 3.15 | 5.0 | K1 | M1 |
| **RCE7U2J471J2□□H03□** | U2J (EIA) | 630Vdc | 470pF±5% | 5.5×4.0 | 3.15 | 5.0 | K1 | M1 |
| **RCE7U2J681J2□□H03□** | U2J (EIA) | 630Vdc | 680pF±5% | 5.5×4.0 | 3.15 | 5.0 | K1 | M1 |
| **RCE7U2J102J2□□H03□** | U2J (EIA) | 630Vdc | 1000pF±5% | 5.5×4.0 | 3.15 | 5.0 | K1 | M1 |
| **RCE7U2J152J2□□H03□** | U2J (EIA) | 630Vdc | 1500pF±5% | 5.5×4.0 | 3.15 | 5.0 | K1 | M1 |
| **RCE7U2J222J2□□H03□** | U2J (EIA) | 630Vdc | 2200pF±5% | 5.5×4.0 | 3.15 | 5.0 | K1 | M1 |
| **RCE7U2J332J2□□H03□** | U2J (EIA) | 630Vdc | 3300pF±5% | 5.5×4.0 | 3.15 | 5.0 | K1 | M1 |
| **RCE7U2J472J2□□H03□** | U2J (EIA) | 630Vdc | 4700pF±5% | 5.5×4.0 | 3.15 | 5.0 | K1 | M1 |
| **RCE7U2J682J3□□H03□** | U2J (EIA) | 630Vdc | 6800pF±5% | 5.5×5.0 | 4.0 | 5.0 | K1 | M1 |
| **RCE7U2J103J3□□H03□** | U2J (EIA) | 630Vdc | 10000pF±5% | 5.5×5.0 | 4.0 | 5.0 | K1 | M1 |
| **RCE7U2J153J4□□H03□** | U2J (EIA) | 630Vdc | 15000pF±5% | 7.5×5.5 | 4.0 | 5.0 | K1 | M1 |
| **RCE7U2J223J4□□H03□** | U2J (EIA) | 630Vdc | 22000pF±5% | 7.5×5.5 | 4.0 | 5.0 | K1 | M1 |
| **RCE7U2J333J5□□H03□** | U2J (EIA) | 630Vdc | 33000pF±5% | 7.5×8.0 | 4.0 | 5.0 | B1 | E1 |
| **RCE7U2J473J5□□H03□** | U2J (EIA) | 630Vdc | 47000pF±5% | 7.5×8.0 | 4.0 | 5.0 | B1 | E1 |
| **RCE7U2J943JU□□H03□** | U2J (EIA) | 630Vdc | 94000pF±5% | 7.7×13.0 | 4.0 | 5.0 | B1 | E1 |
| **RCE7U3A100J2□□H03□** | U2J (EIA) | 1000Vdc | 10pF±5% | 5.5×4.0 | 3.15 | 5.0 | K1 | M1 |
| **RCE7U3A150J2□□H03□** | U2J (EIA) | 1000Vdc | 15pF±5% | 5.5×4.0 | 3.15 | 5.0 | K1 | M1 |
| **RCE7U3A220J2□□H03□** | U2J (EIA) | 1000Vdc | 22pF±5% | 5.5×4.0 | 3.15 | 5.0 | K1 | M1 |
| **RCE7U3A330J2□□H03□** | U2J (EIA) | 1000Vdc | 33pF±5% | 5.5×4.0 | 3.15 | 5.0 | K1 | M1 |
| **RCE7U3A470J2□□H03□** | U2J (EIA) | 1000Vdc | 47pF±5% | 5.5×4.0 | 3.15 | 5.0 | K1 | M1 |
| **RCE7U3A680J2□□H03□** | U2J (EIA) | 1000Vdc | 68pF±5% | 5.5×4.0 | 3.15 | 5.0 | K1 | M1 |
| **RCE7U3A101J2□□H03□** | U2J (EIA) | 1000Vdc | 100pF±5% | 5.5×4.0 | 3.15 | 5.0 | K1 | M1 |
| **RCE7U3A151J2□□H03□** | U2J (EIA) | 1000Vdc | 150pF±5% | 5.5×4.0 | 3.15 | 5.0 | K1 | M1 |
| **RCE7U3A221J2□□H03□** | U2J (EIA) | 1000Vdc | 220pF±5% | 5.5×4.0 | 3.15 | 5.0 | K1 | M1 |
| **RCE7U3A331J2□□H03□** | U2J (EIA) | 1000Vdc | 330pF±5% | 5.5×4.0 | 3.15 | 5.0 | K1 | M1 |
| **RCE7U3A471J2□□H03□** | U2J (EIA) | 1000Vdc | 470pF±5% | 5.5×4.0 | 3.15 | 5.0 | K1 | M1 |
| **RCE7U3A681J2□□H03□** | U2J (EIA) | 1000Vdc | 680pF±5% | 5.5×4.0 | 3.15 | 5.0 | K1 | M1 |
| **RCE7U3A102J2□□H03□** | U2J (EIA) | 1000Vdc | 1000pF±5% | 5.5×4.0 | 3.15 | 5.0 | K1 | M1 |
| **RCE7U3A152J3□□H03□** | U2J (EIA) | 1000Vdc | 1500pF±5% | 5.5×5.0 | 4.0 | 5.0 | K1 | M1 |
| **RCE7U3A222J3□□H03□** | U2J (EIA) | 1000Vdc | 2200pF±5% | 5.5×5.0 | 4.0 | 5.0 | K1 | M1 |
| **RCE7U3A332J4□□H03□** | U2J (EIA) | 1000Vdc | 3300pF±5% | 7.5×5.5 | 4.0 | 5.0 | K1 | M1 |
| **RCE7U3A472J4□□H03□** | U2J (EIA) | 1000Vdc | 4700pF±5% | 7.5×5.5 | 4.0 | 5.0 | K1 | M1 |
| **RCE7U3A682J5□□H03□** | U2J (EIA) | 1000Vdc | 6800pF±5% | 7.5×8.0 | 4.0 | 5.0 | B1 | E1 |
| **RCE7U3A103J5□□H03□** | U2J (EIA) | 1000Vdc | 10000pF±5% | 7.5×8.0 | 4.0 | 5.0 | B1 | E1 |
| **RCE7U3A203JU□□H03□** | U2J (EIA) | 1000Vdc | 20000pF±5% | 7.7×13.0 | 4.0 | 5.0 | B1 | E1 |

Two blank columns are filled with the lead style code. Please refer to the 3 columns on the right for the appropriate code.
The last blank column is filled with the packaging code. (B: bulk, A: ammo pack)

# High Dielectric Constant Type, X7R/X7S Characteristics

| Part Number | Temp. Char. | Rated Voltage | Capacitance | Dimensions LxW (mm) | Dimension T (mm) | Lead Space F (mm) | Lead Style Code Bulk | Lead Style Code Taping |
|---|---|---|---|---|---|---|---|---|
| **RCER71E335K2□□H03□** | X7R (EIA) | 25Vdc | 3.3μF±10% | 5.5×4.0 | 3.15 | 2.5 | A2 | DB |
| **RCER71E335K2□□H03□** | X7R (EIA) | 25Vdc | 3.3μF±10% | 5.5×4.0 | 3.15 | 5.0 | K1 | M1 |
| **RCER71E475K2□□H03□** | X7R (EIA) | 25Vdc | 4.7μF±10% | 5.5×4.0 | 3.15 | 2.5 | A2 | DB |
| **RCER71E475K2□□H03□** | X7R (EIA) | 25Vdc | 4.7μF±10% | 5.5×4.0 | 3.15 | 5.0 | K1 | M1 |
| **RCER71E106K3□□H03□** | X7R (EIA) | 25Vdc | 10μF±10% | 5.5×5.0 | 4.0 | 2.5 | A2 | DB |
| **RCER71E106K3□□H03□** | X7R (EIA) | 25Vdc | 10μF±10% | 5.5×5.0 | 4.0 | 5.0 | K1 | M1 |
| **RCER71E226MW□□H03□** | X7R (EIA) | 25Vdc | 22μF±20% | 5.5×7.5 | 4.0 | 5.0 | K1 | M1 |
| **RCER71H221K0□□H03□** | X7R (EIA) | 50Vdc | 220pF±10% | 3.6×3.5 | 2.5 | 2.5 | A2 | DB |
| **RCER71H221K0□□H03□** | X7R (EIA) | 50Vdc | 220pF±10% | 3.6×3.5 | 2.5 | 5.0 | K1 | M1 |
| **RCER71H331K0□□H03□** | X7R (EIA) | 50Vdc | 330pF±10% | 3.6×3.5 | 2.5 | 2.5 | A2 | DB |
| **RCER71H331K0□□H03□** | X7R (EIA) | 50Vdc | 330pF±10% | 3.6×3.5 | 2.5 | 5.0 | K1 | M1 |
| **RCER71H471K0□□H03□** | X7R (EIA) | 50Vdc | 470pF±10% | 3.6×3.5 | 2.5 | 2.5 | A2 | DB |
| **RCER71H471K0□□H03□** | X7R (EIA) | 50Vdc | 470pF±10% | 3.6×3.5 | 2.5 | 5.0 | K1 | M1 |
| **RCER71H681K0□□H03□** | X7R (EIA) | 50Vdc | 680pF±10% | 3.6×3.5 | 2.5 | 2.5 | A2 | DB |
| **RCER71H681K0□□H03□** | X7R (EIA) | 50Vdc | 680pF±10% | 3.6×3.5 | 2.5 | 5.0 | K1 | M1 |
| **RCER71H102K0□□H03□** | X7R (EIA) | 50Vdc | 1000pF±10% | 3.6×3.5 | 2.5 | 2.5 | A2 | DB |
| **RCER71H102K0□□H03□** | X7R (EIA) | 50Vdc | 1000pF±10% | 3.6×3.5 | 2.5 | 5.0 | K1 | M1 |
| **RCER71H152K0□□H03□** | X7R (EIA) | 50Vdc | 1500pF±10% | 3.6×3.5 | 2.5 | 2.5 | A2 | DB |
| **RCER71H152K0□□H03□** | X7R (EIA) | 50Vdc | 1500pF±10% | 3.6×3.5 | 2.5 | 5.0 | K1 | M1 |
| **RCER71H222K0□□H03□** | X7R (EIA) | 50Vdc | 2200pF±10% | 3.6×3.5 | 2.5 | 2.5 | A2 | DB |
| **RCER71H222K0□□H03□** | X7R (EIA) | 50Vdc | 2200pF±10% | 3.6×3.5 | 2.5 | 5.0 | K1 | M1 |
| **RCER71H332K0□□H03□** | X7R (EIA) | 50Vdc | 3300pF±10% | 3.6×3.5 | 2.5 | 2.5 | A2 | DB |
| **RCER71H332K0□□H03□** | X7R (EIA) | 50Vdc | 3300pF±10% | 3.6×3.5 | 2.5 | 5.0 | K1 | M1 |
| **RCER71H472K0□□H03□** | X7R (EIA) | 50Vdc | 4700pF±10% | 3.6×3.5 | 2.5 | 2.5 | A2 | DB |
| **RCER71H472K0□□H03□** | X7R (EIA) | 50Vdc | 4700pF±10% | 3.6×3.5 | 2.5 | 5.0 | K1 | M1 |
| **RCER71H682K0□□H03□** | X7R (EIA) | 50Vdc | 6800pF±10% | 3.6×3.5 | 2.5 | 2.5 | A2 | DB |
| **RCER71H682K0□□H03□** | X7R (EIA) | 50Vdc | 6800pF±10% | 3.6×3.5 | 2.5 | 5.0 | K1 | M1 |
| **RCER71H103K0□□H03□** | X7R (EIA) | 50Vdc | 10000pF±10% | 3.6×3.5 | 2.5 | 2.5 | A2 | DB |
| **RCER71H103K0□□H03□** | X7R (EIA) | 50Vdc | 10000pF±10% | 3.6×3.5 | 2.5 | 5.0 | K1 | M1 |
| **RCER71H153K0□□H03□** | X7R (EIA) | 50Vdc | 15000pF±10% | 3.6×3.5 | 2.5 | 2.5 | A2 | DB |
| **RCER71H153K0□□H03□** | X7R (EIA) | 50Vdc | 15000pF±10% | 3.6×3.5 | 2.5 | 5.0 | K1 | M1 |
| **RCER71H223K0□□H03□** | X7R (EIA) | 50Vdc | 22000pF±10% | 3.6×3.5 | 2.5 | 2.5 | A2 | DB |
| **RCER71H223K0□□H03□** | X7R (EIA) | 50Vdc | 22000pF±10% | 3.6×3.5 | 2.5 | 5.0 | K1 | M1 |
| **RCER71H333K0□□H03□** | X7R (EIA) | 50Vdc | 33000pF±10% | 3.6×3.5 | 2.5 | 2.5 | A2 | DB |
| **RCER71H333K0□□H03□** | X7R (EIA) | 50Vdc | 33000pF±10% | 3.6×3.5 | 2.5 | 5.0 | K1 | M1 |
| **RCER71H473K0□□H03□** | X7R (EIA) | 50Vdc | 47000pF±10% | 3.6×3.5 | 2.5 | 2.5 | A2 | DB |
| **RCER71H473K0□□H03□** | X7R (EIA) | 50Vdc | 47000pF±10% | 3.6×3.5 | 2.5 | 5.0 | K1 | M1 |
| **RCER71H683K0□□H03□** | X7R (EIA) | 50Vdc | 68000pF±10% | 3.6×3.5 | 2.5 | 2.5 | A2 | DB |
| **RCER71H683K0□□H03□** | X7R (EIA) | 50Vdc | 68000pF±10% | 3.6×3.5 | 2.5 | 5.0 | K1 | M1 |
| **RCER71H104K0□□H03□** | X7R (EIA) | 50Vdc | 0.10μF±10% | 3.6×3.5 | 2.5 | 2.5 | A2 | DB |
| **RCER71H104K0□□H03□** | X7R (EIA) | 50Vdc | 0.10μF±10% | 3.6×3.5 | 2.5 | 5.0 | K1 | M1 |
| **RCER71H154K1□□H03□** | X7R (EIA) | 50Vdc | 0.15μF±10% | 4.0×3.5 | 2.5 | 2.5 | A2 | DB |
| **RCER71H154K1□□H03□** | X7R (EIA) | 50Vdc | 0.15μF±10% | 4.0×3.5 | 2.5 | 5.0 | K1 | M1 |
| **RCER71H224K1□□H03□** | X7R (EIA) | 50Vdc | 0.22μF±10% | 4.0×3.5 | 2.5 | 2.5 | A2 | DB |
| **RCER71H224K1□□H03□** | X7R (EIA) | 50Vdc | 0.22μF±10% | 4.0×3.5 | 2.5 | 5.0 | K1 | M1 |
| **RCER71H334K1□□H03□** | X7R (EIA) | 50Vdc | 0.33μF±10% | 4.0×3.5 | 2.5 | 2.5 | A2 | DB |
| **RCER71H334K1□□H03□** | X7R (EIA) | 50Vdc | 0.33μF±10% | 4.0×3.5 | 2.5 | 5.0 | K1 | M1 |
| **RCER71H474K1□□H03□** | X7R (EIA) | 50Vdc | 0.47μF±10% | 4.0×3.5 | 2.5 | 2.5 | A2 | DB |
| **RCER71H474K1□□H03□** | X7R (EIA) | 50Vdc | 0.47μF±10% | 4.0×3.5 | 2.5 | 5.0 | K1 | M1 |
| **RCER71H684K2□□H03□** | X7R (EIA) | 50Vdc | 0.68μF±10% | 5.5×4.0 | 3.15 | 2.5 | A2 | DB |
| **RCER71H684K2□□H03□** | X7R (EIA) | 50Vdc | 0.68μF±10% | 5.5×4.0 | 3.15 | 5.0 | K1 | M1 |
| **RCER71H105K2□□H03□** | X7R (EIA) | 50Vdc | 1.0μF±10% | 5.5×4.0 | 3.15 | 2.5 | A2 | DB |
| **RCER71H105K2□□H03□** | X7R (EIA) | 50Vdc | 1.0μF±10% | 5.5×4.0 | 3.15 | 5.0 | K1 | M1 |
| **RCER71H155K2□□H03□** | X7R (EIA) | 50Vdc | 1.5μF±10% | 5.5×4.0 | 3.15 | 2.5 | A2 | DB |
| **RCER71H155K2□□H03□** | X7R (EIA) | 50Vdc | 1.5μF±10% | 5.5×4.0 | 3.15 | 5.0 | K1 | M1 |

Continued on the following page.

Continued from the preceding page.

| Part Number | Temp. Char. | Rated Voltage | Capacitance | Dimensions LxW (mm) | Dimension T (mm) | Lead Space F (mm) | Lead Style Code Bulk | Lead Style Code Taping |
|---|---|---|---|---|---|---|---|---|
| **RCER71H225K2□□H03□** | X7R (EIA) | 50Vdc | 2.2μF±10% | 5.5×4.0 | 3.15 | 2.5 | A2 | DB |
| **RCER71H225K2□□H03□** | X7R (EIA) | 50Vdc | 2.2μF±10% | 5.5×4.0 | 3.15 | 5.0 | K1 | M1 |
| **RCER71H335K3□□H03□** | X7R (EIA) | 50Vdc | 3.3μF±10% | 5.5×5.0 | 4.0 | 2.5 | A2 | DB |
| **RCER71H335K3□□H03□** | X7R (EIA) | 50Vdc | 3.3μF±10% | 5.5×5.0 | 4.0 | 5.0 | K1 | M1 |
| **RCER71H475K3□□H03□** | X7R (EIA) | 50Vdc | 4.7μF±10% | 5.5×5.0 | 4.0 | 2.5 | A2 | DB |
| **RCER71H475K3□□H03□** | X7R (EIA) | 50Vdc | 4.7μF±10% | 5.5×5.0 | 4.0 | 5.0 | K1 | M1 |
| **RCER71H106MW□□H03□** | X7R (EIA) | 50Vdc | 10μF±20% | 5.5×7.5 | 4.0 | 5.0 | K1 | M1 |
| **RCER72A221K0□□H03□** | X7R (EIA) | 100Vdc | 220pF±10% | 3.6×3.5 | 2.5 | 2.5 | A2 | DB |
| **RCER72A221K0□□H03□** | X7R (EIA) | 100Vdc | 220pF±10% | 3.6×3.5 | 2.5 | 5.0 | K1 | M1 |
| **RCER72A331K0□□H03□** | X7R (EIA) | 100Vdc | 330pF±10% | 3.6×3.5 | 2.5 | 2.5 | A2 | DB |
| **RCER72A331K0□□H03□** | X7R (EIA) | 100Vdc | 330pF±10% | 3.6×3.5 | 2.5 | 5.0 | K1 | M1 |
| **RCER72A471K0□□H03□** | X7R (EIA) | 100Vdc | 470pF±10% | 3.6×3.5 | 2.5 | 2.5 | A2 | DB |
| **RCER72A471K0□□H03□** | X7R (EIA) | 100Vdc | 470pF±10% | 3.6×3.5 | 2.5 | 5.0 | K1 | M1 |
| **RCER72A681K0□□H03□** | X7R (EIA) | 100Vdc | 680pF±10% | 3.6×3.5 | 2.5 | 2.5 | A2 | DB |
| **RCER72A681K0□□H03□** | X7R (EIA) | 100Vdc | 680pF±10% | 3.6×3.5 | 2.5 | 5.0 | K1 | M1 |
| **RCER72A102K0□□H03□** | X7R (EIA) | 100Vdc | 1000pF±10% | 3.6×3.5 | 2.5 | 2.5 | A2 | DB |
| **RCER72A102K0□□H03□** | X7R (EIA) | 100Vdc | 1000pF±10% | 3.6×3.5 | 2.5 | 5.0 | K1 | M1 |
| **RCER72A152K0□□H03□** | X7R (EIA) | 100Vdc | 1500pF±10% | 3.6×3.5 | 2.5 | 2.5 | A2 | DB |
| **RCER72A152K0□□H03□** | X7R (EIA) | 100Vdc | 1500pF±10% | 3.6×3.5 | 2.5 | 5.0 | K1 | M1 |
| **RCER72A222K0□□H03□** | X7R (EIA) | 100Vdc | 2200pF±10% | 3.6×3.5 | 2.5 | 2.5 | A2 | DB |
| **RCER72A222K0□□H03□** | X7R (EIA) | 100Vdc | 2200pF±10% | 3.6×3.5 | 2.5 | 5.0 | K1 | M1 |
| **RCER72A332K0□□H03□** | X7R (EIA) | 100Vdc | 3300pF±10% | 3.6×3.5 | 2.5 | 2.5 | A2 | DB |
| **RCER72A332K0□□H03□** | X7R (EIA) | 100Vdc | 3300pF±10% | 3.6×3.5 | 2.5 | 5.0 | K1 | M1 |
| **RCER72A472K0□□H03□** | X7R (EIA) | 100Vdc | 4700pF±10% | 3.6×3.5 | 2.5 | 2.5 | A2 | DB |
| **RCER72A472K0□□H03□** | X7R (EIA) | 100Vdc | 4700pF±10% | 3.6×3.5 | 2.5 | 5.0 | K1 | M1 |
| **RCER72A682K0□□H03□** | X7R (EIA) | 100Vdc | 6800pF±10% | 3.6×3.5 | 2.5 | 2.5 | A2 | DB |
| **RCER72A682K0□□H03□** | X7R (EIA) | 100Vdc | 6800pF±10% | 3.6×3.5 | 2.5 | 5.0 | K1 | M1 |
| **RCER72A103K0□□H03□** | X7R (EIA) | 100Vdc | 10000pF±10% | 3.6×3.5 | 2.5 | 2.5 | A2 | DB |
| **RCER72A103K0□□H03□** | X7R (EIA) | 100Vdc | 10000pF±10% | 3.6×3.5 | 2.5 | 5.0 | K1 | M1 |
| **RCER72A153K0□□H03□** | X7R (EIA) | 100Vdc | 15000pF±10% | 3.6×3.5 | 2.5 | 2.5 | A2 | DB |
| **RCER72A153K0□□H03□** | X7R (EIA) | 100Vdc | 15000pF±10% | 3.6×3.5 | 2.5 | 5.0 | K1 | M1 |
| **RCER72A223K0□□H03□** | X7R (EIA) | 100Vdc | 22000pF±10% | 3.6×3.5 | 2.5 | 2.5 | A2 | DB |
| **RCER72A223K0□□H03□** | X7R (EIA) | 100Vdc | 22000pF±10% | 3.6×3.5 | 2.5 | 5.0 | K1 | M1 |
| **RCER72A333K1□□H03□** | X7R (EIA) | 100Vdc | 33000pF±10% | 4.0×3.5 | 2.5 | 2.5 | A2 | DB |
| **RCER72A333K1□□H03□** | X7R (EIA) | 100Vdc | 33000pF±10% | 4.0×3.5 | 2.5 | 5.0 | K1 | M1 |
| **RCER72A473K1□□H03□** | X7R (EIA) | 100Vdc | 47000pF±10% | 4.0×3.5 | 2.5 | 2.5 | A2 | DB |
| **RCER72A473K1□□H03□** | X7R (EIA) | 100Vdc | 47000pF±10% | 4.0×3.5 | 2.5 | 5.0 | K1 | M1 |
| **RCER72A683K1□□H03□** | X7R (EIA) | 100Vdc | 68000pF±10% | 4.0×3.5 | 2.5 | 2.5 | A2 | DB |
| **RCER72A683K1□□H03□** | X7R (EIA) | 100Vdc | 68000pF±10% | 4.0×3.5 | 2.5 | 5.0 | K1 | M1 |
| **RCER72A104K1□□H03□** | X7R (EIA) | 100Vdc | 0.10μF±10% | 4.0×3.5 | 2.5 | 2.5 | A2 | DB |
| **RCER72A104K1□□H03□** | X7R (EIA) | 100Vdc | 0.10μF±10% | 4.0×3.5 | 2.5 | 5.0 | K1 | M1 |
| **RCER72A154K2□□H03□** | X7R (EIA) | 100Vdc | 0.15μF±10% | 5.5×4.0 | 3.15 | 2.5 | A2 | DB |
| **RCER72A154K2□□H03□** | X7R (EIA) | 100Vdc | 0.15μF±10% | 5.5×4.0 | 3.15 | 5.0 | K1 | M1 |
| **RCER72A224K2□□H03□** | X7R (EIA) | 100Vdc | 0.22μF±10% | 5.5×4.0 | 3.15 | 2.5 | A2 | DB |
| **RCER72A224K2□□H03□** | X7R (EIA) | 100Vdc | 0.22μF±10% | 5.5×4.0 | 3.15 | 5.0 | K1 | M1 |
| **RCER72A334K1□□H03□** | X7R (EIA) | 100Vdc | 0.33μF±10% | 4.0×3.5 | 2.5 | 2.5 | A2 | DB |
| **RCER72A334K1□□H03□** | X7R (EIA) | 100Vdc | 0.33μF±10% | 4.0×3.5 | 2.5 | 5.0 | K1 | M1 |
| **RCER72A474K2□□H03□** | X7R (EIA) | 100Vdc | 0.47μF±10% | 5.5×4.0 | 3.15 | 2.5 | A2 | DB |
| **RCER72A474K2□□H03□** | X7R (EIA) | 100Vdc | 0.47μF±10% | 5.5×4.0 | 3.15 | 5.0 | K1 | M1 |
| **RCER72A684K2□□H03□** | X7R (EIA) | 100Vdc | 0.68μF±10% | 5.5×4.0 | 3.15 | 2.5 | A2 | DB |
| **RCER72A684K2□□H03□** | X7R (EIA) | 100Vdc | 0.68μF±10% | 5.5×4.0 | 3.15 | 5.0 | K1 | M1 |
| **RCER72A105K2□□H03□** | X7R (EIA) | 100Vdc | 1.0μF±10% | 5.5×4.0 | 3.15 | 2.5 | A2 | DB |
| **RCER72A105K2□□H03□** | X7R (EIA) | 100Vdc | 1.0μF±10% | 5.5×4.0 | 3.15 | 5.0 | K1 | M1 |
| **RCEC72A155K3□□H03□** | X7S (EIA) | 100Vdc | 1.5μF±10% | 5.5×5.0 | 4.0 | 2.5 | A2 | DB |
| **RCEC72A155K3□□H03□** | X7S (EIA) | 100Vdc | 1.5μF±10% | 5.5×5.0 | 4.0 | 5.0 | K1 | M1 |
| **RCEC72A225K3□□H03□** | X7S (EIA) | 100Vdc | 2.2μF±10% | 5.5×5.0 | 4.0 | 2.5 | A2 | DB |
| **RCEC72A225K3□□H03□** | X7S (EIA) | 100Vdc | 2.2μF±10% | 5.5×5.0 | 4.0 | 5.0 | K1 | M1 |

Continued on the following page.

Continued from the preceding page.

| Part Number | Temp. Char. | Rated Voltage | Capacitance | Dimensions LxW (mm) | Dimension T (mm) | Lead Space F (mm) | Lead Style Code Bulk | Lead Style Code Taping |
|---|---|---|---|---|---|---|---|---|
| **RCEC72A475MW□□H03□** | X7S (EIA) | 100Vdc | 4.7μF±20% | 5.5×7.5 | 4.0 | 5.0 | K1 | M1 |
| **RCER72E102K1□□H03□** | X7R (EIA) | 250Vdc | 1000pF±10% | 4.0×3.5 | 3.15 | 5.0 | K1 | M1 |
| **RCER72E152K1□□H03□** | X7R (EIA) | 250Vdc | 1500pF±10% | 4.0×3.5 | 3.15 | 5.0 | K1 | M1 |
| **RCER72E222K1□□H03□** | X7R (EIA) | 250Vdc | 2200pF±10% | 4.0×3.5 | 3.15 | 5.0 | K1 | M1 |
| **RCER72E332K1□□H03□** | X7R (EIA) | 250Vdc | 3300pF±10% | 4.0×3.5 | 3.15 | 5.0 | K1 | M1 |
| **RCER72E472K1□□H03□** | X7R (EIA) | 250Vdc | 4700pF±10% | 4.0×3.5 | 3.15 | 5.0 | K1 | M1 |
| **RCER72E682K1□□H03□** | X7R (EIA) | 250Vdc | 6800pF±10% | 4.0×3.5 | 3.15 | 5.0 | K1 | M1 |
| **RCER72E103K1□□H03□** | X7R (EIA) | 250Vdc | 10000pF±10% | 4.0×3.5 | 3.15 | 5.0 | K1 | M1 |
| **RCER72E153K1□□H03□** | X7R (EIA) | 250Vdc | 15000pF±10% | 4.0×3.5 | 3.15 | 5.0 | K1 | M1 |
| **RCER72E223K1□□H03□** | X7R (EIA) | 250Vdc | 22000pF±10% | 4.0×3.5 | 3.15 | 5.0 | K1 | M1 |
| **RCER72E333K2□□H03□** | X7R (EIA) | 250Vdc | 33000pF±10% | 5.5×4.0 | 3.15 | 5.0 | K1 | M1 |
| **RCER72E473K2□□H03□** | X7R (EIA) | 250Vdc | 47000pF±10% | 5.5×4.0 | 3.15 | 5.0 | K1 | M1 |
| **RCER72E683K2□□H03□** | X7R (EIA) | 250Vdc | 68000pF±10% | 5.5×4.0 | 3.15 | 5.0 | K1 | M1 |
| **RCER72E104K2□□H03□** | X7R (EIA) | 250Vdc | 0.10μF±10% | 5.5×4.0 | 3.15 | 5.0 | K1 | M1 |
| **RCER72E154K3□□H03□** | X7R (EIA) | 250Vdc | 0.15μF±10% | 5.5×5.0 | 4.0 | 5.0 | K1 | M1 |
| **RCER72E224K3□□H03□** | X7R (EIA) | 250Vdc | 0.22μF±10% | 5.5×5.0 | 4.0 | 5.0 | K1 | M1 |
| **RCER72E334K4□□H03□** | X7R (EIA) | 250Vdc | 0.33μF±10% | 7.5×5.5 | 4.0 | 5.0 | K1 | M1 |
| **RCER72E474K4□□H03□** | X7R (EIA) | 250Vdc | 0.47μF±10% | 7.5×5.5 | 4.0 | 5.0 | K1 | M1 |
| **RCER72E684K5□□H03□** | X7R (EIA) | 250Vdc | 0.68μF±10% | 7.5×7.5 | 4.0 | 5.0 | B1 | E1 |
| **RCER72E105K5□□H03□** | X7R (EIA) | 250Vdc | 1.0μF±10% | 7.5×7.5 | 4.0 | 5.0 | B1 | E1 |
| **RCER72E225MU□□H03□** | X7R (EIA) | 250Vdc | 2.2μF±20% | 7.5×12.5 | 4.0 | 5.0 | B1 | E1 |
| **RCER72J102K2□□H03□** | X7R (EIA) | 630Vdc | 1000pF±10% | 5.5×4.0 | 3.15 | 5.0 | K1 | M1 |
| **RCER72J152K2□□H03□** | X7R (EIA) | 630Vdc | 1500pF±10% | 5.5×4.0 | 3.15 | 5.0 | K1 | M1 |
| **RCER72J222K2□□H03□** | X7R (EIA) | 630Vdc | 2200pF±10% | 5.5×4.0 | 3.15 | 5.0 | K1 | M1 |
| **RCER72J332K2□□H03□** | X7R (EIA) | 630Vdc | 3300pF±10% | 5.5×4.0 | 3.15 | 5.0 | K1 | M1 |
| **RCER72J472K2□□H03□** | X7R (EIA) | 630Vdc | 4700pF±10% | 5.5×4.0 | 3.15 | 5.0 | K1 | M1 |
| **RCER72J682K2□□H03□** | X7R (EIA) | 630Vdc | 6800pF±10% | 5.5×4.0 | 3.15 | 5.0 | K1 | M1 |
| **RCER72J103K2□□H03□** | X7R (EIA) | 630Vdc | 10000pF±10% | 5.5×4.0 | 3.15 | 5.0 | K1 | M1 |
| **RCER72J153K2□□H03□** | X7R (EIA) | 630Vdc | 15000pF±10% | 5.5×4.0 | 3.15 | 5.0 | K1 | M1 |
| **RCER72J223K2□□H03□** | X7R (EIA) | 630Vdc | 22000pF±10% | 5.5×4.0 | 3.15 | 5.0 | K1 | M1 |
| **RCER72J333K3□□H03□** | X7R (EIA) | 630Vdc | 33000pF±10% | 5.5×5.0 | 4.0 | 5.0 | K1 | M1 |
| **RCER72J473K3□□H03□** | X7R (EIA) | 630Vdc | 47000pF±10% | 5.5×5.0 | 4.0 | 5.0 | K1 | M1 |
| **RCER72J683K4□□H03□** | X7R (EIA) | 630Vdc | 68000pF±10% | 7.5×5.5 | 4.0 | 5.0 | K1 | M1 |
| **RCER72J104K4□□H03□** | X7R (EIA) | 630Vdc | 0.10μF±10% | 7.5×5.5 | 4.0 | 5.0 | K1 | M1 |
| **RCER72J154K5□□H03□** | X7R (EIA) | 630Vdc | 0.15μF±10% | 7.5×8.0 | 4.0 | 5.0 | B1 | E1 |
| **RCER72J224K5□□H03□** | X7R (EIA) | 630Vdc | 0.22μF±10% | 7.5×8.0 | 4.0 | 5.0 | B1 | E1 |
| **RCER72J474MU□□H03□** | X7R (EIA) | 630Vdc | 0.47μF±20% | 7.7×13.0 | 4.0 | 5.0 | B1 | E1 |
| **RCER73A102K2□□H03□** | X7R (EIA) | 1000Vdc | 1000pF±10% | 5.5×4.0 | 3.15 | 5.0 | K1 | M1 |
| **RCER73A152K2□□H03□** | X7R (EIA) | 1000Vdc | 1500pF±10% | 5.5×4.0 | 3.15 | 5.0 | K1 | M1 |
| **RCER73A222K2□□H03□** | X7R (EIA) | 1000Vdc | 2200pF±10% | 5.5×4.0 | 3.15 | 5.0 | K1 | M1 |
| **RCER73A332K2□□H03□** | X7R (EIA) | 1000Vdc | 3300pF±10% | 5.5×4.0 | 3.15 | 5.0 | K1 | M1 |
| **RCER73A472K2□□H03□** | X7R (EIA) | 1000Vdc | 4700pF±10% | 5.5×4.0 | 3.15 | 5.0 | K1 | M1 |
| **RCER73A682K2□□H03□** | X7R (EIA) | 1000Vdc | 6800pF±10% | 5.5×4.0 | 3.15 | 5.0 | K1 | M1 |
| **RCER73A103K2□□H03□** | X7R (EIA) | 1000Vdc | 10000pF±10% | 5.5×4.0 | 3.15 | 5.0 | K1 | M1 |
| **RCER73A153K3□□H03□** | X7R (EIA) | 1000Vdc | 15000pF±10% | 5.5×5.0 | 4.0 | 5.0 | K1 | M1 |
| **RCER73A223K3□□H03□** | X7R (EIA) | 1000Vdc | 22000pF±10% | 5.5×5.0 | 4.0 | 5.0 | K1 | M1 |
| **RCER73A333K4□□H03□** | X7R (EIA) | 1000Vdc | 33000pF±10% | 7.5×5.5 | 4.0 | 5.0 | K1 | M1 |
| **RCER73A473K4□□H03□** | X7R (EIA) | 1000Vdc | 47000pF±10% | 7.5×5.5 | 4.0 | 5.0 | K1 | M1 |
| **RCER73A683K5□□H03□** | X7R (EIA) | 1000Vdc | 68000pF±10% | 7.5×8.0 | 4.0 | 5.0 | B1 | E1 |
| **RCER73A104K5□□H03□** | X7R (EIA) | 1000Vdc | 0.10μF±10% | 7.5×8.0 | 4.0 | 5.0 | B1 | E1 |
| **RCER73A224MU□□H03□** | X7R (EIA) | 1000Vdc | 0.22μF±20% | 7.7×13.0 | 4.0 | 5.0 | B1 | E1 |

Two blank columns are filled with the lead style code. Please refer to the 3 columns on the right for the appropriate code.
The last blank column is filled with the packaging code. (B: bulk, A: ammo pack)

# Temperature Compensating Type Specifications and Test Methods

| No. | AEC-Q200 Test Item | | Specifications | AEC-Q200 Test Method |
|---|---|---|---|---|
| 1 | Pre-and Post-Stress Electrical Test | | – | |
| 2 | High Temperature Exposure (Storage) | | The measured and observed characteristics should satisfy the specifications in the following table. | Sit the capacitor for 1,000±12h at 150±3°C. Let sit for 24±2h at room temperature, then measure. |
| | | Appearance | No defects or abnormalities | |
| | | Capacitance Change | Within ±3% or ±0.3pF (Whichever is larger) | |
| | | Q | 30pF ≦ C: Q ≧ 350<br>10pF ≦ C < 30pF: Q ≧ 275+5C/2<br>10pF > C: Q ≧ 200+10C<br><br>C: Nominal Capacitance (pF) | |
| | | I.R. | More than 1,000MΩ or 50MΩ · μF (Whichever is smaller) | |
| 3 | Temperature Cycling | | The measured and observed characteristics should satisfy the specifications in the following table. | Perform the 1,000 cycles according to the four heat treatments listed in the following table. Let sit for 24±2h at *room condition, then measure. |
| | | Appearance | No defects or abnormalities | |
| | | Capacitance Change | Within ±5% or ±0.5pF (Whichever is larger) | |
| | | Q | 30pF ≦ C: Q ≧ 350<br>10pF ≦ C < 30pF: Q ≧ 275+5C/2<br>10pF > C: Q ≧ 200+10C<br><br>C: Nominal Capacitance (pF) | |
| | | I.R. | 1,000MΩ or 50MΩ · μF min. (Whichever is smaller) | |
| 4 | Moisture Resistance | | The measured and observed characteristics should satisfy the specifications in the following table. | Apply the 24h heat (25 to 65°C) and humidity (80 to 98%) treatment shown below, 10 consecutive times.<br>Let sit for 24±2h at *room condition, then measure. |
| | | Appearance | No defects or abnormalities | |
| | | Capacitance Change | Within ±5% or ±0.5pF (Whichever is larger) | |
| | | Q | 30pF ≦ C: Q ≧ 200<br>30pF > C: Q ≧ 100+10C/3<br><br>C: Nominal Capacitance (pF) | |
| | | I.R. | 500MΩ or 25MΩ · μF min. (Whichever is smaller) | |
| 5 | Biased Humidity | | The measured and observed characteristics should satisfy the specifications in the following table. | Apply the rated voltage and DC1.3+0.2/-0V (add 6.8kΩ resistor) at 85±3°C and 80 to 85% humidity for 1,000±12h.<br>Remove and let sit for 24±2h at *room condition, then measure.<br>The charge/discharge current is less than 50mA. |
| | | Appearance | No defects or abnormalities | |
| | | Capacitance Change | Within ±5% or ±0.5pF (Whichever is larger) | |
| | | Q | 30pF ≦ C: Q ≧ 200<br>30pF > C: Q ≧ 100+10C/3<br><br>C: Nominal Capacitance (pF) | |
| | | I.R. | 500MΩ or 25MΩ · μF min. (Whichever is smaller) | |
| 6 | Operational Life | | The measured and observed characteristics should satisfy the specifications in the following table. | Apply the voltage shown in the table for 1,000±12h at 125±3°C.<br>Let sit for 24±2h at *room condition, then measure.<br>The charge/discharge current is less than 50mA. |
| | | Appearance | No defects or abnormalities | |
| | | Capacitance Change | Within ±3% or ±0.3pF (Whichever is larger) | |
| | | Q | 30pF ≦ C: Q ≧ 350<br>10pF ≦ C < 30pF: Q ≧ 275+5C/2<br>10pF > C: Q ≧ 200+10C<br><br>C: Nominal Capacitance (pF) | |
| | | I.R. | 1,000MΩ or 50MΩ · μF min. (Whichever is smaller) | |

| Step | 1 | 2 | 3 | 4 |
|---|---|---|---|---|
| Temp. (°C) | -55+0/-3 | Room Temp. | 125+3/-0 | Room Temp. |
| Time (min.) | 15±3 | 1 | 15±3 | 1 |

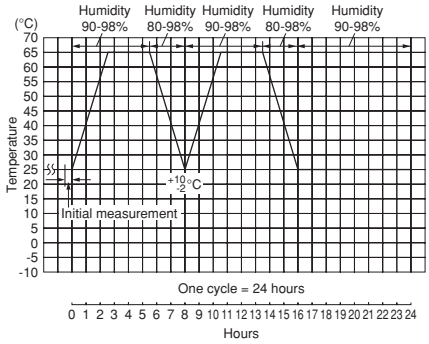


| Rated Voltage | Test Voltage |
|---|---|
| DC50V, DC100V | 200% of the rated voltage |
| DC250V | 150% of the rated voltage |
| DC630V, DC1kV | 120% of the rated voltage |

* "room condition" Temperature: 15 to 35°C, Relative humidity: 45 to 75%, Atmosphere pressure: 86 to 106kPa

Continued on the following page.

# Temperature Compensating Type Specifications and Test Methods

Continued from the preceding page.

| No. | AEC-Q200 Test Item | | Specifications | AEC-Q200 Test Method |
|---|---|---|---|---|
| 7 | External Visual | | No defects or abnormalities | Visual inspection |
| 8 | Physical Dimension | | Within the specified dimensions | Using calipers and micrometers. |
| 9 | Marking | | To be easily legible. | Visual inspection |
| 10 | Resistance to Solvents | Appearance | No defects or abnormalities | Per MIL-STD-202 Method 215<br>Solvent 1: 1 part (by volume) of isopropyl alcohol<br>3 parts (by volume) of mineral spirits<br>Solvent 2: Terpene defluxer<br>Solvent 3: 42 parts (by volume) of water<br>1 part (by volume) of propylene glycol monomethyl ether<br>1 part (by volume) of monoethanolamine |
| | | Capacitance | Within the specified tolerance | |
| | | Q | 30pF ≦ C: Q ≧ 1,000<br>30pF > C: Q ≧ 400+20C<br>C: Nominal Capacitance (pF) | |
| | | I.R. | More than 10,000MΩ or 500MΩ · μF (Whichever is smaller) | |
| 11 | Mechanical Shock | Appearance | No defects or abnormalities | Three shocks in each direction should be applied along 3 mutually perpendicular axes of the test specimen (18 shocks). The specified test pulse should be Half-sine and should have a duration: 0.5ms, peak value: 1,500G and velocity change: 4.7m/s. |
| | | Capacitance | Within the specified tolerance | |
| | | Q | 30pF ≦ C : Q ≧ 1,000<br>30pF > C : Q ≧ 400+20C<br>C : Nominal Capacitance (pF) | |
| 12 | Vibration | Appearance | No defects or abnormalities | The capacitor should be subjected to a simple harmonic motion having a total amplitude of 1.5mm, the frequency being varied uniformly between the approximate limits of 10 and 2,000Hz. The frequency range, from 10 to 2,000Hz and return to 10Hz, should be traversed in approximately 20min. This motion should be applied for 12 items in each 3 mutually perpendicular directions (total of 36 times). |
| | | Capacitance | Within the specified tolerance | |
| | | Q | 30pF ≦ C: Q ≧ 1,000<br>30pF > C: Q ≧ 400+20C<br>C: Nominal Capacitance (pF) | |
| 13 | Resistance to Soldering Heat | | The measured and observed characteristics should satisfy the specifications in the following table. | The lead wire is immersed in the melted solder 1.5 to 2mm from the main body at 260±5°C for 10±1s. The specified items are measured after 24±2h. |
| | | Appearance | No defects or abnormalities | |
| | | Capacitance Change | Within ±2.5% or ±0.25pF (Whichever is larger) | |
| | | Dielectric Strength (Between Terminals) | No defects | |
| 14 | Thermal Shock | | The measured and observed characteristics should satisfy the specifications in the following table. | Perform the 300 cycles according to the two heat treatments listed in the following table (Maximum transfer time is 20s.). Let sit for 24±2h at *room condition, then measure.<br>Step: 1 — Temp. (°C): -55+0/-3 — Time (min.): 15±3<br>Step: 2 — Temp. (°C): 125+3/-0 — Time (min.): 15±3 |
| | | Appearance | No defects or abnormalities | |
| | | Capacitance Change | Within ±5% or ±0.5pF (Whichever is larger) | |
| | | Q | 30pF ≦ C: Q ≧ 350<br>10pF ≦ C < 30p: Q ≧ 275+5C/2<br>10pF > C: Q ≧ 200+10C<br>C: Nominal Capacitance (pF) | |
| | | I.R. | 1,000MΩ or 50MΩ · μF min. (Whichever is smaller) | |
| 15 | ESD | Appearance | No defects or abnormalities | Per AEC-Q200-004 |
| | | Capacitance | Within the specified tolerance | |
| | | Q | 30pF ≦ C: Q ≧ 1,000<br>30pF > C: Q ≧ 400+20C<br>C: Nominal Capacitance (pF) | |
| | | I.R. | More than 10,000MΩ or 500MΩ · μF (Whichever is smaller) | |
| 16 | Solderability | | Lead wire should be soldered with uniform coating on the axial direction over 95% of the circumferential direction. | Should be placed into steam aging for 8h±15min. The terminal of capacitor is dipped into a solution of ethanol (JIS K 8101) and rosin (JIS K 5902) (25% rosin in weight propotion). Immerse in solder solution for 2±0.5 seconds. In both cases the depth of dipping is up to about 1.5 to 2mm from the terminal body. |

* "room condition" Temperature: 15 to 35°C, Relative humidity: 45 to 75%, Atmosphere pressure: 86 to 106kPa

Continued on the following page.

# Temperature Compensating Type Specifications and Test Methods

Continued from the preceding page.

| No. | AEC-Q200 Test Item | | Specifications | | AEC-Q200 Test Method |
|---|---|---|---|---|---|
| 17 | Electrical Charac-terization | Appearance | No defects or abnormalities | | Visual inspection. |
| | | Capacitance | Within the specified tolerance | | The capacitance, Q should be measured at 25°C at the frequency and voltage shown in the table.<br>Nominal Cap. / Frequency / Voltage<br>C ≦ 1000pF / 1±0.1MHz / AC0.5 to 5V (r.m.s.)<br>C > 1000pF / 1±0.1kHz / AC1±0.2V (r.m.s.) |
| | | Q | 30pF ≦ C: Q ≧ 1,000<br>30pF > C: Q ≧ 400+20C<br>C: Nominal Capacitance (pF) | | |
| | | I.R. | Between Terminals | 10,000MΩ or 500MΩ · μF min. (Whichever is smaller) | The insulation resistance should be measured with a DC voltage not exceeding the rated voltage at 25°C within 2min. of charging. |
| | | Dielectric Strength | Between Terminals | No defects or abnormalities | The capacitor should not be damaged when DC voltage shown in the table is applied between the terminations for 1 to 5 seconds.<br>(Charge/Discharge current ≦ 50mA.)<br>Rated Voltage / Test Voltage<br>DC50V, DC100V / 300% of the rated voltage<br>DC250V / 200% of the rated voltage<br>DC630V / 150% of the rated voltage<br>DC1kV / 130% of the rated voltage |
| | | | Body Insulation | No defects or abnormalities | The capacitor is placed in a container with metal balls of 1mm diameter so that each terminal, short-circuit is kept approximately 2mm from the balls, and 250% of the rated DC voltage is impressed for 1 to 5 seconds between capacitor terminals and metal balls.<br>(Charge/Discharge current ≦ 50mA.) |
| 18 | Terminal Strength | Tensile Strength | Termination not to be broken or loosened | | As in the figure, fix the capacitor body, apply the force gradually to each lead in the radial direction of the capacitor until reaching 10N and then keep the force applied for 10±1 seconds.<br> 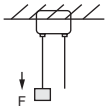 <br> |
| | | Bending Strength | Termination not to be broken or loosened | | Each lead wire should be subjected to a force of 2.5N and then be bent 90° at the point of egress in one direction. Each wire is then returned to the original position and bent 90° in the opposite direction at the rate of one bend per 2 to 3 seconds. |
| 19 | Capacitance Temperature Characteristics | | Within the specified Tolerance.<br>(Table A)<br>Capacitance Drift is within ±0.2% or ±0.05pF (Whichever is larger) | | The capacitance change should be measured after 5min. at each specified temperature step.<br>Step / Temperature (°C)<br>1 / 25±2<br>2 / -55±3<br>3 / 25±2<br>4 / 125±3<br>5 / 25±2<br>The temperature coefficient is determind using the capacitance measured in step 3 as a reference. When cycling the temperature sequentially from step 1 through 5 (-55°C to +125°C) the capacitance should be within the specified tolerance for the temperature coefficient and capacitance change as Table A.<br>The capacitance drift is caluculated by dividing the differences betweeen the maximum and minimum measured values in the step 1, 3 and 5 by the capacitance value in step 3. |

* "room condition" Temperature: 15 to 35°C, Relative humidity: 45 to 75%, Atmosphere pressure: 86 to 106kPa

## Table A

| Char. | Nominal Values (ppm/°C) * | Capacitance Change from 25°C (%) | | | | | |
|---|---|---|---|---|---|---|---|
| | | -55 | | -30 | | -10 | |
| | | Max. | Min. | Max. | Min. | Max. | Min. |
| C0G | 0±30 | 0.58 | -0.24 | 0.40 | -0.17 | 0.25 | -0.11 |
| U2J | -750±120 | 8.78 | 5.04 | 6.04 | 3.47 | 3.84 | 2.21 |

* Nominal values denote the temperature coefficient within a range of 25°C to 125°C.

# High Dielectric Constant Type Specifications and Test Methods



| No. | AEC-Q200 Test Item | | Specifications | AEC-Q200 Test Method |
|---|---|---|---|---|
| 1 | Pre-and Post-Stress Electrical Test | | – | |
| 2 | High Temperature Exposure (Storage) | | The measured and observed characteristics should satisfy the specifications in the following table. | Sit the capacitor for 1,000±12h at 150±3°C. Let sit for 24±2h at room temperature, then measure. |
| | | Appearance | No defects or abnormalities | |
| | | Capacitance Change | Within ±12.5% | |
| | | D.F. | 0.04 max. | |
| | | I.R. | More than 1,000MΩ or 50MΩ · μF (Whichever is smaller) | |
| 3 | Temperature Cycling | | The measured and observed characteristics should satisfy the specifications in the following table. | Perform the 1,000 cycles according to the four heat treatments listed in the following table. Let sit for 24±2h at *room condition, then measure. |
| | | Appearance | No defects or abnormalities | |
| | | Capacitance Change | Within ±12.5% | |
| | | D.F. | 0.05 max. | |
| | | I.R. | 1,000MΩ or 50MΩ · μF min. (Whichever is smaller) | |
| 4 | Moisture Resistance | | The measured and observed characteristics should satisfy the specifications in the following table. | Apply the 24h heat (25 to 65°C) and humidity (80 to 98%) treatment shown below, 10 consecutive times. Let sit for 24±2h at *room condition, then measure. |
| | | Appearance | No defects or abnormalities | |
| | | Capacitance Change | Within ±12.5% | |
| | | D.F. | 0.05 max. | |
| | | I.R. | 500MΩ or 25MΩ · μF min. (Whichever is smaller) | |
| 5 | Biased Humidity | | The measured and observed characteristics should satisfy the specifications in the following table. | Apply the rated voltage and DC1.3+0.2/-0V (add 6.8kΩ resistor) at 85±3°C and 80 to 85% humidity for 1,000±12h. Remove and let sit for 24±2h at *room condition, then measure. The charge/discharge current is less than 50mA. |
| | | Appearance | No defects or abnormalities | |
| | | Capacitance Change | Within ±12.5% | |
| | | D.F. | 0.05 max. | |
| | | I.R. | 500MΩ or 25MΩ · μF min. (Whichever is smaller) | |
| 6 | Operational Life | | The measured and observed characteristics should satisfy the specifications in the following table. | Apply the voltage shown in the table for 1,000±12h at 125±3°C. Let sit for 24±2h at *room condition, then measure. The charge/discharge current is less than 50mA. |
| | | Appearance | No defects or abnormalities | |
| | | Capacitance Change | Within ±12.5% | |
| | | D.F. | 0.04 max. | |
| | | I.R. | 1,000MΩ or 50MΩ · μF min. (Whichever is smaller) | |
| 7 | External Visual | | No defects or abnormalities | Visual inspection |
| 8 | Physical Dimension | | Within the specified dimensions | Using calipers and micrometers. |
| 9 | Marking | | To be easily legible. | Visual inspection |

| Step | 1 | 2 | 3 | 4 |
|---|---|---|---|---|
| Temp. (°C) | -55+0/-3 | Room Temp. | 125+3/-0 | Room Temp. |
| Time (min.) | 15±3 | 1 | 15±3 | 1 |

•Pretreatment
Perform the heat treatment at 150+0/-10°C for 60±5min and then let sit for 24±2h at *room condition.

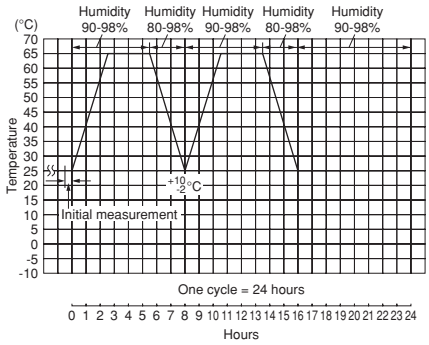


•Pretreatment
Apply test voltage for 60±5min at test temperature.
Remove and let sit for 24±2h at *room condition.

| Rated Voltage | Test Voltage |
|---|---|
| DC25V, DC50V, DC100V | 200% of the rated voltage *1 |
| DC250V | 150% of the rated voltage |
| DC630V | 120% of the rated voltage |
| DC1kV | 110% of the rated voltage |

* "room condition" Temperature: 15 to 35°C, Relative humidity: 45 to 75%, Atmosphere pressure: 86 to 106kPa
*1: below parts are applicable in rated voltage×150%.

| Char. | Rated Voltage | Capacitance | Dimensions |
|---|---|---|---|
| R7 | 2A | 334 | 1 |
| R7 | 2A | 474-105 | 2 |
| C7 | 2A | 155-225 | 3 |
| C7 | 2A | 475 | W |

Continued on the following page.

# High Dielectric Constant Type Specifications and Test Methods

Continued from the preceding page.

| No. | AEC-Q200 Test Item | | Specifications | AEC-Q200 Test Method |
|---|---|---|---|---|
| 10 | Resistance to Solvents | Appearance | No defects or abnormalities | Per MIL-STD-202 Method 215<br>Solvent 1: 1 part (by volume) of isopropyl alcohol<br>3 parts (by volume) of mineral spirits<br>Solvent 2: Terpene defluxer<br>Solvent 3: 42 parts (by volume) of water<br>1 part (by volume) of propylene glycol monomethyl ether<br>1 part (by volume) of monoethanolamine |
| | | Capacitance | Within the specified tolerance | |
| | | D.F. | 0.025 max. | |
| | | I.R. | More than 10,000MΩ or 500MΩ · μF (Whichever is smaller) | |
| 11 | Mechanical Shock | Appearance | No defects or abnormalities | Three shocks in each direction should be applied along 3 mutually perpendicular axes of the test specimen (18 shocks). The specified test pulse should be Half-sine and should have a duration: 0.5ms, peak value: 1,500G and velocity change: 4.7m/s. |
| | | Capacitance | Within the specified tolerance | |
| | | D.F. | 0.025 max. | |
| 12 | Vibration | Appearance | No defects or abnormalities | The capacitor should be subjected to a simple harmonic motion having a total amplitude of 1.5mm, the frequency being varied uniformly between the approximate limits of 10 and 2,000Hz. The frequency range, from 10 to 2,000Hz and return to 10Hz, should be traversed in approximately 20min. This motion should be applied for 12 items in each 3 mutually perpendicular directions (total of 36 times). |
| | | Capacitance | Within the specified tolerance | |
| | | D.F. | 0.025 max. | |
| 13 | Resistance to Soldering Heat | | The measured and observed characteristics should satisfy the specifications in the following table. | The lead wire is immersed in the melted solder 1.5 to 2mm from the main body at 260±5°C for 10±1s. The specified items are measured after 24±2h.<br>•Pretreatment<br>Perform the heat treatment at 150+0/-10°C for 60±5min and then let sit for 24±2h at *room condition. |
| | | Appearance | No defects or abnormalities | |
| | | Capacitance Change | Wthin ±7.5% | |
| | | Dielectric Strength (Between terminals) | No defects | |
| 14 | Thermal Shock | | The measured and observed characteristics should satisfy the specifications in the following table. | Perform the 300 cycles according to the two heat treatments listed in the following table (Maximum transfer time is 20s.). Let sit for 24±2h at *room condition, then measure.<br>Step 1: Temp. (°C) -55+0/-3, Time (min.) 15±3<br>Step 2: Temp. (°C) 125+3/-0, Time (min.) 15±3<br>•Pretreatment<br>Perform the heat treatment at 150+0/-10°C for 60±5min and then let sit for 24±2h at *room condition. |
| | | Appearance | No defects or abnormalities | |
| | | Capacitance Change | Within ±12.5% | |
| | | D.F. | 0.05 max. | |
| | | I.R. | 1,000MΩ or 50MΩ · μF min. (Whichever is smaller) | |
| 15 | ESD | Appearance | No defects or abnormalities | Per AEC-Q200-004 |
| | | Capacitance | Within the specified tolerance | |
| | | D.F. | 0.025 max. | |
| | | I.R. | More than 10,000MΩ or 500MΩ · μF (Whichever is smaller) | |
| 16 | Solderability | | Lead wire should be soldered with uniform coating on the axial direction over 95% of the circumferential direction. | Should be placed into steam aging for 8h±15min.<br>The terminal of capacitor is dipped into a solution of ethanol (JIS K 8101) and rosin (JIS K 5902) (25% rosin in weight propotion). Immerse in solder solution for 2±0.5 seconds.<br>In both cases the depth of dipping is up to about 1.5 to 2mm from the terminal body. |

* "room condition" Temperature: 15 to 35°C, Relative humidity: 45 to 75%, Atmosphere pressure: 86 to 106kPa

Continued on the following page.

# High Dielectric Constant Type Specifications and Test Methods



Continued from the preceding page.

| No. | AEC-Q200 Test Item | | Specifications | | AEC-Q200 Test Method |
|---|---|---|---|---|---|
| 17 | Electrical Charac-terization | Appearance | No defects or abnormalities | | Visual inspection. |
| | | Capacitance | Within the specified tolerance | | The capacitance/D.F. should be measured at 25°C at the frequency and voltage shown in the table.<br>Frequency: 1±0.1kHz<br>Voltage: 1±0.2V (r.m.s.) |
| | | D.F. | 0.025 max. | | |
| | | I.R. | Between Terminals | 10,000MΩ or 500MΩ · μF min. (Whichever is smaller) | The insulation resistance should be measured with a DC voltage not exceeding the rated voltage at 25°C within 2min. of charging. |
| | | Dielectric Strength | Between Terminals | No defects or abnormalities | The capacitor should not be damaged when DC voltage shown in the table is applied between the terminations for 1 to 5 seconds.<br>(Charge/Discharge current ≦ 50mA.)<br>Rated Voltage / Test Voltage:<br>DC25V, DC50V, DC100V: 250% of the rated voltage<br>DC250V: 200% of the rated voltage<br>DC630V: 150% of the rated voltage<br>DC1kV: 120% of the rated voltage |
| | | | Body Insulation | No defects or abnormalities | The capacitor is placed in a container with metal balls of 1mm diameter so that each terminal, short-circuit is kept approximately 2mm from the balls, and 250% of the rated DC voltage is impressed for 1 to 5 seconds between capacitor terminals and metal balls.<br>(Charge/Discharge current ≦ 50mA.) |
| 18 | Terminal Strength | Tensile Strength | Termination not to be broken or loosened | | As in the figure, fix the capacitor body, apply the force gradually to each lead in the radial direction of the capacitor until reaching 10N and then keep the force applied for 10±1 seconds.<br> 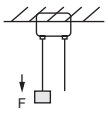 <br> |
| | | Bending Strength | Termination not to be broken or loosened | | Each lead wire should be subjected to a force of 2.5N and then be bent 90° at the point of egress in one direction. Each wire is then returned to the original position and bent 90° in the opposite direction at the rate of one bend per 2 to 3 seconds. |
| 19 | Capacitance Temperature Characteristics | | Char.X7R: Within ±15%<br>Char.X7S: Within ±22% | | The capacitance change should be measured after 5min. at each specified temperature step.<br>Step / Temperature (°C):<br>1: 25±2<br>2: -55±3<br>3: 25±2<br>4: 125±3<br>5: 25±2<br>The ranges of capacitance change compared with the above 25°C value over the temperature ranges shown in the table should be within the specified ranges.<br>•Pretreatment<br>Perform the heat treatment at 150+0/-10°C for 60±5min and then let sit for 24±2h at *room condition.<br>Perform the initial measurement. |

* "room condition" Temperature: 15 to 35°C, Relative humidity: 45 to 75%, Atmosphere pressure: 86 to 106kPa

# Radial Lead Type Monolithic Ceramic Capacitors

muRata

## RHE Series 150°C max. (for Automotive) (DC50V-DC100V)



### ■ Features

1. Small size and large capacitance
2. Low ESR and ESL suitable for high frequency
3. Applied maximum temperature up to 150°C
   Note : Maximum accumulative time to 150°C
   is within 2000 hours.
4. Meet AEC-Q200, ISO7637-2 (surge test) requirement
5. Meet LF (Lead Free) and HF (Halogen Free)
6. Flow soldering and welding are available.
   (Re-flow soldering is not available.)
7. If copper wire is necessary at welding process,
   copper wire is available based on request.

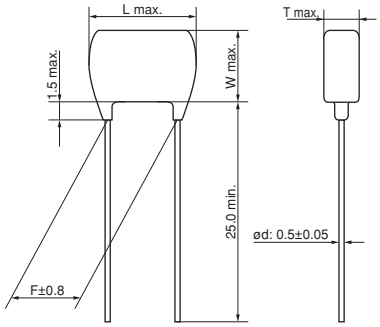


**Dimensions code: 0**
**Lead style code: A2**

· Lead Wire: Solder Coated CP Wire

(in mm)

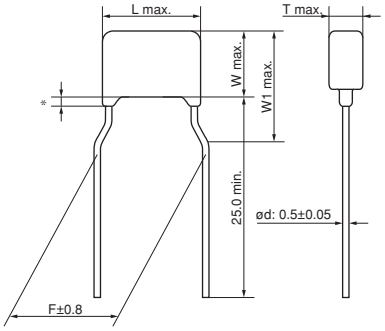


**Dimensions code: 0**
**Lead style code: K1**

∗ Coating extension does not exceed the end of the lead bend.
· Lead Wire: Solder Coated CP Wire

(in mm)

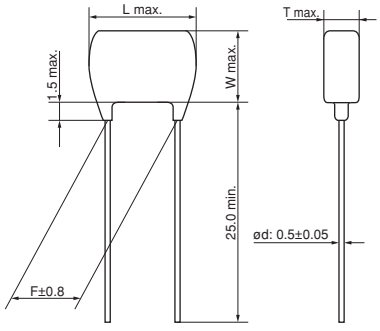


**Dimensions code: 1**
**Lead style code: A2**

· Lead Wire: Solder Coated CP Wire

(in mm)

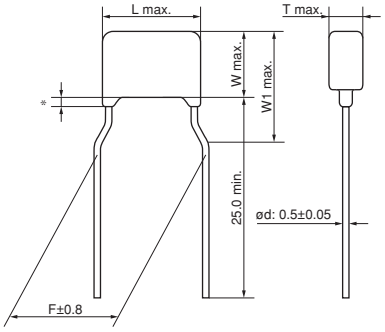


**Dimensions code: 1**
**Lead style code: K1**

∗ Coating extension does not exceed the end of the lead bend.
· Lead Wire: Solder Coated CP Wire

(in mm)

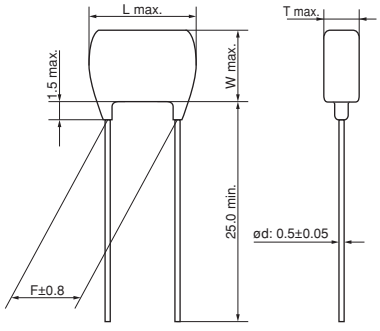


**Dimensions code: 2**
**Lead style code: A2**

· Lead Wire: Solder Coated CP Wire

(in mm)

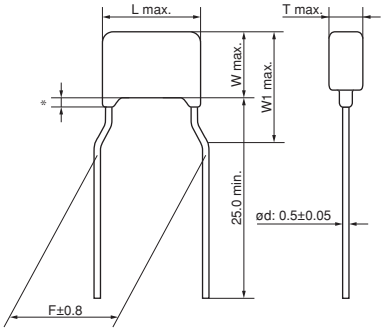


**Dimensions code: 2**
**Lead style code: K1**

∗ Coating extension does not exceed the end of the lead bend.
· Lead Wire: Solder Coated CP Wire

(in mm)

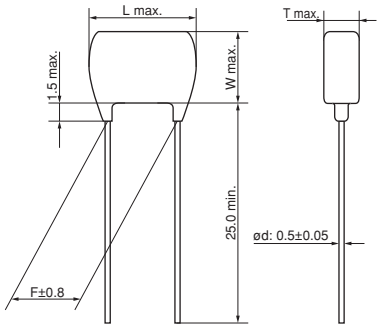


**Dimensions code: 3**
**Lead style code: A2**

· Lead Wire: Solder Coated CP Wire

(in mm)

Continued on the following page. ↗

Continued from the preceding page.

Dimensions code: 3
Lead style code: K1

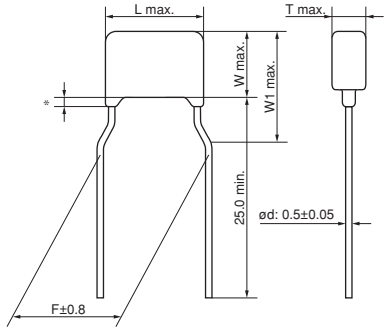


* Coating extension does not exceed the end of the lead bend.
· Lead Wire: Solder Coated CP Wire

(in mm)

Dimensions code: W
Lead style code: K1

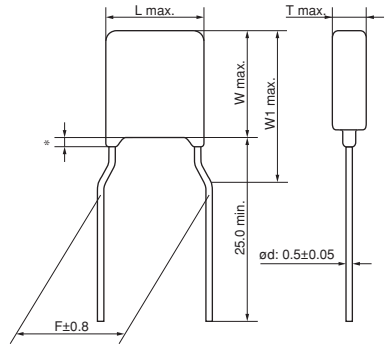


* Coating extension does not exceed the end of the lead bend.
· Lead Wire: Solder Coated CP Wire

(in mm)

## ■ Dimensions

| Dimensions and Lead Style Code | Dimensions (mm) | | | | | |
|---|---|---|---|---|---|---|
| | L | W | W1 | T | F | d |
| **0A2/0DB** | 3.6 | 3.5 | - | See the individual product specification | 2.5 | 0.5 |
| **0K1/0M1** | 3.6 | 3.5 | 6.0 | | 5.0 | 0.5 |
| **1A2/1DB** | 4.0 | 3.5 | - | | 2.5 | 0.5 |
| **1K1/1M1** | 4.0 | 3.5 | 5.0 | | 5.0 | 0.5 |
| **2A2/2DB** | 5.5 | 4.0 | - | | 2.5 | 0.5 |
| **2K1/2M1** | 5.5 | 4.0 | 6.0 | | 5.0 | 0.5 |
| **3A2/3DB** | 5.5 | 5.0 | - | | 2.5 | 0.5 |
| **3K1/3M1** | 5.5 | 5.0 | 7.5 | | 5.0 | 0.5 |
| **WK1/WM1** | 5.5 | 7.5 | 10.0 | | 5.0 | 0.5 |

## ■ Marking

| Dimensions Code \ Type | Temperature Compensating Type | High Dielectric Constant Type | |
|---|---|---|---|
| Rated Voltage | DC50V, DC100V | DC50V | DC100V |
| Temp. Char. | X8G | X8L | |
| 0 | 8<br>102J | 8<br>104K | 8<br>103K |
| 1 | | | |
| 2 | — | Ⓜ 105<br>K58 | Ⓜ 224<br>K18 |
| 3, W | — | Ⓜ 335<br>K58 | — |
| Temperature Characteristics | Marked with code (X8G, X8L char.: 8) | | |
| Nominal Capacitance | Marked with 3 figures | | |
| Capacitance Tolerance | Marked with code | | |
| Rated Voltage | Marked with code (DC50V: 5, DC100V: 1)<br>A part is omitted (Please refer to the marking example.) | | |
| Manufacturer's Identification | Marked with Ⓜ<br>A part is omitted (Please refer to the marking example.) | | |

# Temperature Compensating Type, X8G Characteristics

| Part Number | Temp. Char. | Rated Voltage | Capacitance | Dimensions LxW (mm) | Dimension T (mm) | Lead Space F (mm) | Lead Style Code Bulk | Lead Style Code Taping |
|---|---|---|---|---|---|---|---|---|
| **RHE5G1H101J0□□H03□** | X8G (Murata) | 50Vdc | 100pF±5% | 3.6×3.5 | 2.5 | 2.5 | A2 | DB |
| **RHE5G1H101J0□□H03□** | X8G (Murata) | 50Vdc | 100pF±5% | 3.6×3.5 | 2.5 | 5.0 | K1 | M1 |
| **RHE5G1H121J0□□H03□** | X8G (Murata) | 50Vdc | 120pF±5% | 3.6×3.5 | 2.5 | 2.5 | A2 | DB |
| **RHE5G1H121J0□□H03□** | X8G (Murata) | 50Vdc | 120pF±5% | 3.6×3.5 | 2.5 | 5.0 | K1 | M1 |
| **RHE5G1H151J0□□H03□** | X8G (Murata) | 50Vdc | 150pF±5% | 3.6×3.5 | 2.5 | 2.5 | A2 | DB |
| **RHE5G1H151J0□□H03□** | X8G (Murata) | 50Vdc | 150pF±5% | 3.6×3.5 | 2.5 | 5.0 | K1 | M1 |
| **RHE5G1H181J0□□H03□** | X8G (Murata) | 50Vdc | 180pF±5% | 3.6×3.5 | 2.5 | 2.5 | A2 | DB |
| **RHE5G1H181J0□□H03□** | X8G (Murata) | 50Vdc | 180pF±5% | 3.6×3.5 | 2.5 | 5.0 | K1 | M1 |
| **RHE5G1H221J0□□H03□** | X8G (Murata) | 50Vdc | 220pF±5% | 3.6×3.5 | 2.5 | 2.5 | A2 | DB |
| **RHE5G1H221J0□□H03□** | X8G (Murata) | 50Vdc | 220pF±5% | 3.6×3.5 | 2.5 | 5.0 | K1 | M1 |
| **RHE5G1H271J0□□H03□** | X8G (Murata) | 50Vdc | 270pF±5% | 3.6×3.5 | 2.5 | 2.5 | A2 | DB |
| **RHE5G1H271J0□□H03□** | X8G (Murata) | 50Vdc | 270pF±5% | 3.6×3.5 | 2.5 | 5.0 | K1 | M1 |
| **RHE5G1H331J0□□H03□** | X8G (Murata) | 50Vdc | 330pF±5% | 3.6×3.5 | 2.5 | 2.5 | A2 | DB |
| **RHE5G1H331J0□□H03□** | X8G (Murata) | 50Vdc | 330pF±5% | 3.6×3.5 | 2.5 | 5.0 | K1 | M1 |
| **RHE5G1H391J0□□H03□** | X8G (Murata) | 50Vdc | 390pF±5% | 3.6×3.5 | 2.5 | 2.5 | A2 | DB |
| **RHE5G1H391J0□□H03□** | X8G (Murata) | 50Vdc | 390pF±5% | 3.6×3.5 | 2.5 | 5.0 | K1 | M1 |
| **RHE5G1H471J0□□H03□** | X8G (Murata) | 50Vdc | 470pF±5% | 3.6×3.5 | 2.5 | 2.5 | A2 | DB |
| **RHE5G1H471J0□□H03□** | X8G (Murata) | 50Vdc | 470pF±5% | 3.6×3.5 | 2.5 | 5.0 | K1 | M1 |
| **RHE5G1H561J0□□H03□** | X8G (Murata) | 50Vdc | 560pF±5% | 3.6×3.5 | 2.5 | 2.5 | A2 | DB |
| **RHE5G1H561J0□□H03□** | X8G (Murata) | 50Vdc | 560pF±5% | 3.6×3.5 | 2.5 | 5.0 | K1 | M1 |
| **RHE5G1H681J0□□H03□** | X8G (Murata) | 50Vdc | 680pF±5% | 3.6×3.5 | 2.5 | 2.5 | A2 | DB |
| **RHE5G1H681J0□□H03□** | X8G (Murata) | 50Vdc | 680pF±5% | 3.6×3.5 | 2.5 | 5.0 | K1 | M1 |
| **RHE5G1H821J0□□H03□** | X8G (Murata) | 50Vdc | 820pF±5% | 3.6×3.5 | 2.5 | 2.5 | A2 | DB |
| **RHE5G1H821J0□□H03□** | X8G (Murata) | 50Vdc | 820pF±5% | 3.6×3.5 | 2.5 | 5.0 | K1 | M1 |
| **RHE5G1H102J0□□H03□** | X8G (Murata) | 50Vdc | 1000pF±5% | 3.6×3.5 | 2.5 | 2.5 | A2 | DB |
| **RHE5G1H102J0□□H03□** | X8G (Murata) | 50Vdc | 1000pF±5% | 3.6×3.5 | 2.5 | 5.0 | K1 | M1 |
| **RHE5G1H122J0□□H03□** | X8G (Murata) | 50Vdc | 1200pF±5% | 3.6×3.5 | 2.5 | 2.5 | A2 | DB |
| **RHE5G1H122J0□□H03□** | X8G (Murata) | 50Vdc | 1200pF±5% | 3.6×3.5 | 2.5 | 5.0 | K1 | M1 |
| **RHE5G1H152J0□□H03□** | X8G (Murata) | 50Vdc | 1500pF±5% | 3.6×3.5 | 2.5 | 2.5 | A2 | DB |
| **RHE5G1H152J0□□H03□** | X8G (Murata) | 50Vdc | 1500pF±5% | 3.6×3.5 | 2.5 | 5.0 | K1 | M1 |
| **RHE5G1H182J0□□H03□** | X8G (Murata) | 50Vdc | 1800pF±5% | 3.6×3.5 | 2.5 | 2.5 | A2 | DB |
| **RHE5G1H182J0□□H03□** | X8G (Murata) | 50Vdc | 1800pF±5% | 3.6×3.5 | 2.5 | 5.0 | K1 | M1 |
| **RHE5G1H222J0□□H03□** | X8G (Murata) | 50Vdc | 2200pF±5% | 3.6×3.5 | 2.5 | 2.5 | A2 | DB |
| **RHE5G1H222J0□□H03□** | X8G (Murata) | 50Vdc | 2200pF±5% | 3.6×3.5 | 2.5 | 5.0 | K1 | M1 |
| **RHE5G1H272J0□□H03□** | X8G (Murata) | 50Vdc | 2700pF±5% | 3.6×3.5 | 2.5 | 2.5 | A2 | DB |
| **RHE5G1H272J0□□H03□** | X8G (Murata) | 50Vdc | 2700pF±5% | 3.6×3.5 | 2.5 | 5.0 | K1 | M1 |
| **RHE5G1H332J0□□H03□** | X8G (Murata) | 50Vdc | 3300pF±5% | 3.6×3.5 | 2.5 | 2.5 | A2 | DB |
| **RHE5G1H332J0□□H03□** | X8G (Murata) | 50Vdc | 3300pF±5% | 3.6×3.5 | 2.5 | 5.0 | K1 | M1 |
| **RHE5G1H392J0□□H03□** | X8G (Murata) | 50Vdc | 3900pF±5% | 3.6×3.5 | 2.5 | 2.5 | A2 | DB |
| **RHE5G1H392J0□□H03□** | X8G (Murata) | 50Vdc | 3900pF±5% | 3.6×3.5 | 2.5 | 5.0 | K1 | M1 |
| **RHE5G1H472J1□□H03□** | X8G (Murata) | 50Vdc | 4700pF±5% | 4.0×3.5 | 2.5 | 2.5 | A2 | DB |
| **RHE5G1H472J1□□H03□** | X8G (Murata) | 50Vdc | 4700pF±5% | 4.0×3.5 | 2.5 | 5.0 | K1 | M1 |
| **RHE5G1H562J1□□H03□** | X8G (Murata) | 50Vdc | 5600pF±5% | 4.0×3.5 | 2.5 | 2.5 | A2 | DB |
| **RHE5G1H562J1□□H03□** | X8G (Murata) | 50Vdc | 5600pF±5% | 4.0×3.5 | 2.5 | 5.0 | K1 | M1 |
| **RHE5G1H682J1□□H03□** | X8G (Murata) | 50Vdc | 6800pF±5% | 4.0×3.5 | 2.5 | 2.5 | A2 | DB |
| **RHE5G1H682J1□□H03□** | X8G (Murata) | 50Vdc | 6800pF±5% | 4.0×3.5 | 2.5 | 5.0 | K1 | M1 |
| **RHE5G1H822J1□□H03□** | X8G (Murata) | 50Vdc | 8200pF±5% | 4.0×3.5 | 2.5 | 2.5 | A2 | DB |
| **RHE5G1H822J1□□H03□** | X8G (Murata) | 50Vdc | 8200pF±5% | 4.0×3.5 | 2.5 | 5.0 | K1 | M1 |
| **RHE5G1H103J1□□H03□** | X8G (Murata) | 50Vdc | 10000pF±5% | 4.0×3.5 | 2.5 | 2.5 | A2 | DB |
| **RHE5G1H103J1□□H03□** | X8G (Murata) | 50Vdc | 10000pF±5% | 4.0×3.5 | 2.5 | 5.0 | K1 | M1 |
| **RHE5G2A101J0□□H03□** | X8G (Murata) | 100Vdc | 100pF±5% | 3.6×3.5 | 2.5 | 2.5 | A2 | DB |
| **RHE5G2A101J0□□H03□** | X8G (Murata) | 100Vdc | 100pF±5% | 3.6×3.5 | 2.5 | 5.0 | K1 | M1 |
| **RHE5G2A121J0□□H03□** | X8G (Murata) | 100Vdc | 120pF±5% | 3.6×3.5 | 2.5 | 2.5 | A2 | DB |
| **RHE5G2A121J0□□H03□** | X8G (Murata) | 100Vdc | 120pF±5% | 3.6×3.5 | 2.5 | 5.0 | K1 | M1 |
| **RHE5G2A151J0□□H03□** | X8G (Murata) | 100Vdc | 150pF±5% | 3.6×3.5 | 2.5 | 2.5 | A2 | DB |

Continued on the following page.

Continued from the preceding page.

| Part Number | Temp. Char. | Rated Voltage | Capacitance | Dimensions LxW (mm) | Dimension T (mm) | Lead Space F (mm) | Lead Style Code Bulk | Lead Style Code Taping |
|---|---|---|---|---|---|---|---|---|
| **RHE5G2A151J0□□H03□** | X8G (Murata) | 100Vdc | 150pF±5% | 3.6×3.5 | 2.5 | 5.0 | K1 | M1 |
| **RHE5G2A181J0□□H03□** | X8G (Murata) | 100Vdc | 180pF±5% | 3.6×3.5 | 2.5 | 2.5 | A2 | DB |
| **RHE5G2A181J0□□H03□** | X8G (Murata) | 100Vdc | 180pF±5% | 3.6×3.5 | 2.5 | 5.0 | K1 | M1 |
| **RHE5G2A221J0□□H03□** | X8G (Murata) | 100Vdc | 220pF±5% | 3.6×3.5 | 2.5 | 2.5 | A2 | DB |
| **RHE5G2A221J0□□H03□** | X8G (Murata) | 100Vdc | 220pF±5% | 3.6×3.5 | 2.5 | 5.0 | K1 | M1 |
| **RHE5G2A271J0□□H03□** | X8G (Murata) | 100Vdc | 270pF±5% | 3.6×3.5 | 2.5 | 2.5 | A2 | DB |
| **RHE5G2A271J0□□H03□** | X8G (Murata) | 100Vdc | 270pF±5% | 3.6×3.5 | 2.5 | 5.0 | K1 | M1 |
| **RHE5G2A331J0□□H03□** | X8G (Murata) | 100Vdc | 330pF±5% | 3.6×3.5 | 2.5 | 2.5 | A2 | DB |
| **RHE5G2A331J0□□H03□** | X8G (Murata) | 100Vdc | 330pF±5% | 3.6×3.5 | 2.5 | 5.0 | K1 | M1 |
| **RHE5G2A391J0□□H03□** | X8G (Murata) | 100Vdc | 390pF±5% | 3.6×3.5 | 2.5 | 2.5 | A2 | DB |
| **RHE5G2A391J0□□H03□** | X8G (Murata) | 100Vdc | 390pF±5% | 3.6×3.5 | 2.5 | 5.0 | K1 | M1 |
| **RHE5G2A471J0□□H03□** | X8G (Murata) | 100Vdc | 470pF±5% | 3.6×3.5 | 2.5 | 2.5 | A2 | DB |
| **RHE5G2A471J0□□H03□** | X8G (Murata) | 100Vdc | 470pF±5% | 3.6×3.5 | 2.5 | 5.0 | K1 | M1 |
| **RHE5G2A561J0□□H03□** | X8G (Murata) | 100Vdc | 560pF±5% | 3.6×3.5 | 2.5 | 2.5 | A2 | DB |
| **RHE5G2A561J0□□H03□** | X8G (Murata) | 100Vdc | 560pF±5% | 3.6×3.5 | 2.5 | 5.0 | K1 | M1 |
| **RHE5G2A681J0□□H03□** | X8G (Murata) | 100Vdc | 680pF±5% | 3.6×3.5 | 2.5 | 2.5 | A2 | DB |
| **RHE5G2A681J0□□H03□** | X8G (Murata) | 100Vdc | 680pF±5% | 3.6×3.5 | 2.5 | 5.0 | K1 | M1 |
| **RHE5G2A821J0□□H03□** | X8G (Murata) | 100Vdc | 820pF±5% | 3.6×3.5 | 2.5 | 2.5 | A2 | DB |
| **RHE5G2A821J0□□H03□** | X8G (Murata) | 100Vdc | 820pF±5% | 3.6×3.5 | 2.5 | 5.0 | K1 | M1 |
| **RHE5G2A102J0□□H03□** | X8G (Murata) | 100Vdc | 1000pF±5% | 3.6×3.5 | 2.5 | 2.5 | A2 | DB |
| **RHE5G2A102J0□□H03□** | X8G (Murata) | 100Vdc | 1000pF±5% | 3.6×3.5 | 2.5 | 5.0 | K1 | M1 |
| **RHE5G2A122J0□□H03□** | X8G (Murata) | 100Vdc | 1200pF±5% | 3.6×3.5 | 2.5 | 2.5 | A2 | DB |
| **RHE5G2A122J0□□H03□** | X8G (Murata) | 100Vdc | 1200pF±5% | 3.6×3.5 | 2.5 | 5.0 | K1 | M1 |
| **RHE5G2A152J0□□H03□** | X8G (Murata) | 100Vdc | 1500pF±5% | 3.6×3.5 | 2.5 | 2.5 | A2 | DB |
| **RHE5G2A152J0□□H03□** | X8G (Murata) | 100Vdc | 1500pF±5% | 3.6×3.5 | 2.5 | 5.0 | K1 | M1 |
| **RHE5G2A182J1□□H03□** | X8G (Murata) | 100Vdc | 1800pF±5% | 4.0×3.5 | 2.5 | 2.5 | A2 | DB |
| **RHE5G2A182J1□□H03□** | X8G (Murata) | 100Vdc | 1800pF±5% | 4.0×3.5 | 2.5 | 5.0 | K1 | M1 |
| **RHE5G2A222J1□□H03□** | X8G (Murata) | 100Vdc | 2200pF±5% | 4.0×3.5 | 2.5 | 2.5 | A2 | DB |
| **RHE5G2A222J1□□H03□** | X8G (Murata) | 100Vdc | 2200pF±5% | 4.0×3.5 | 2.5 | 5.0 | K1 | M1 |
| **RHE5G2A272J1□□H03□** | X8G (Murata) | 100Vdc | 2700pF±5% | 4.0×3.5 | 2.5 | 2.5 | A2 | DB |
| **RHE5G2A272J1□□H03□** | X8G (Murata) | 100Vdc | 2700pF±5% | 4.0×3.5 | 2.5 | 5.0 | K1 | M1 |
| **RHE5G2A332J1□□H03□** | X8G (Murata) | 100Vdc | 3300pF±5% | 4.0×3.5 | 2.5 | 2.5 | A2 | DB |
| **RHE5G2A332J1□□H03□** | X8G (Murata) | 100Vdc | 3300pF±5% | 4.0×3.5 | 2.5 | 5.0 | K1 | M1 |

Two blank columns are filled with the lead style code. Please refer to the 3 columns on the right for the appropriate code.
The last blank column is filled with the packaging code. (B: bulk, A: ammo pack)

## High Dielectric Constant Type, X8L Characteristics

| Part Number | Temp. Char. | Rated Voltage | Capacitance | Dimensions LxW (mm) | Dimension T (mm) | Lead Space F (mm) | Lead Style Code Bulk | Lead Style Code Taping |
|---|---|---|---|---|---|---|---|---|
| **RHEL81H221K0□□H03□** | X8L (Murata) | 50Vdc | 220pF±10% | 3.6×3.5 | 2.5 | 2.5 | A2 | DB |
| **RHEL81H221K0□□H03□** | X8L (Murata) | 50Vdc | 220pF±10% | 3.6×3.5 | 2.5 | 5.0 | K1 | M1 |
| **RHEL81H331K0□□H03□** | X8L (Murata) | 50Vdc | 330pF±10% | 3.6×3.5 | 2.5 | 2.5 | A2 | DB |
| **RHEL81H331K0□□H03□** | X8L (Murata) | 50Vdc | 330pF±10% | 3.6×3.5 | 2.5 | 5.0 | K1 | M1 |
| **RHEL81H471K0□□H03□** | X8L (Murata) | 50Vdc | 470pF±10% | 3.6×3.5 | 2.5 | 2.5 | A2 | DB |
| **RHEL81H471K0□□H03□** | X8L (Murata) | 50Vdc | 470pF±10% | 3.6×3.5 | 2.5 | 5.0 | K1 | M1 |
| **RHEL81H681K0□□H03□** | X8L (Murata) | 50Vdc | 680pF±10% | 3.6×3.5 | 2.5 | 2.5 | A2 | DB |
| **RHEL81H681K0□□H03□** | X8L (Murata) | 50Vdc | 680pF±10% | 3.6×3.5 | 2.5 | 5.0 | K1 | M1 |
| **RHEL81H102K0□□H03□** | X8L (Murata) | 50Vdc | 1000pF±10% | 3.6×3.5 | 2.5 | 2.5 | A2 | DB |
| **RHEL81H102K0□□H03□** | X8L (Murata) | 50Vdc | 1000pF±10% | 3.6×3.5 | 2.5 | 5.0 | K1 | M1 |
| **RHEL81H152K0□□H03□** | X8L (Murata) | 50Vdc | 1500pF±10% | 3.6×3.5 | 2.5 | 2.5 | A2 | DB |
| **RHEL81H152K0□□H03□** | X8L (Murata) | 50Vdc | 1500pF±10% | 3.6×3.5 | 2.5 | 5.0 | K1 | M1 |
| **RHEL81H222K0□□H03□** | X8L (Murata) | 50Vdc | 2200pF±10% | 3.6×3.5 | 2.5 | 2.5 | A2 | DB |
| **RHEL81H222K0□□H03□** | X8L (Murata) | 50Vdc | 2200pF±10% | 3.6×3.5 | 2.5 | 5.0 | K1 | M1 |
| **RHEL81H332K0□□H03□** | X8L (Murata) | 50Vdc | 3300pF±10% | 3.6×3.5 | 2.5 | 2.5 | A2 | DB |
| **RHEL81H332K0□□H03□** | X8L (Murata) | 50Vdc | 3300pF±10% | 3.6×3.5 | 2.5 | 5.0 | K1 | M1 |

Continued on the following page.

Continued from the preceding page.

2

| Part Number | Temp. Char. | Rated Voltage | Capacitance | Dimensions LxW (mm) | Dimension T (mm) | Lead Space F (mm) | Lead Style Code Bulk | Lead Style Code Taping |
|---|---|---|---|---|---|---|---|---|
| **RHEL81H472K0□□H03□** | X8L (Murata) | 50Vdc | 4700pF±10% | 3.6×3.5 | 2.5 | 2.5 | A2 | DB |
| **RHEL81H472K0□□H03□** | X8L (Murata) | 50Vdc | 4700pF±10% | 3.6×3.5 | 2.5 | 5.0 | K1 | M1 |
| **RHEL81H682K0□□H03□** | X8L (Murata) | 50Vdc | 6800pF±10% | 3.6×3.5 | 2.5 | 2.5 | A2 | DB |
| **RHEL81H682K0□□H03□** | X8L (Murata) | 50Vdc | 6800pF±10% | 3.6×3.5 | 2.5 | 5.0 | K1 | M1 |
| **RHEL81H103K0□□H03□** | X8L (Murata) | 50Vdc | 10000pF±10% | 3.6×3.5 | 2.5 | 2.5 | A2 | DB |
| **RHEL81H103K0□□H03□** | X8L (Murata) | 50Vdc | 10000pF±10% | 3.6×3.5 | 2.5 | 5.0 | K1 | M1 |
| **RHEL81H153K0□□H03□** | X8L (Murata) | 50Vdc | 15000pF±10% | 3.6×3.5 | 2.5 | 2.5 | A2 | DB |
| **RHEL81H153K0□□H03□** | X8L (Murata) | 50Vdc | 15000pF±10% | 3.6×3.5 | 2.5 | 5.0 | K1 | M1 |
| **RHEL81H223K0□□H03□** | X8L (Murata) | 50Vdc | 22000pF±10% | 3.6×3.5 | 2.5 | 2.5 | A2 | DB |
| **RHEL81H223K0□□H03□** | X8L (Murata) | 50Vdc | 22000pF±10% | 3.6×3.5 | 2.5 | 5.0 | K1 | M1 |
| **RHEL81H333K0□□H03□** | X8L (Murata) | 50Vdc | 33000pF±10% | 3.6×3.5 | 2.5 | 2.5 | A2 | DB |
| **RHEL81H333K0□□H03□** | X8L (Murata) | 50Vdc | 33000pF±10% | 3.6×3.5 | 2.5 | 5.0 | K1 | M1 |
| **RHEL81H473K0□□H03□** | X8L (Murata) | 50Vdc | 47000pF±10% | 3.6×3.5 | 2.5 | 2.5 | A2 | DB |
| **RHEL81H473K0□□H03□** | X8L (Murata) | 50Vdc | 47000pF±10% | 3.6×3.5 | 2.5 | 5.0 | K1 | M1 |
| **RHEL81H683K0□□H03□** | X8L (Murata) | 50Vdc | 68000pF±10% | 3.6×3.5 | 2.5 | 2.5 | A2 | DB |
| **RHEL81H683K0□□H03□** | X8L (Murata) | 50Vdc | 68000pF±10% | 3.6×3.5 | 2.5 | 5.0 | K1 | M1 |
| **RHEL81H104K0□□H03□** | X8L (Murata) | 50Vdc | 0.10μF±10% | 3.6×3.5 | 2.5 | 2.5 | A2 | DB |
| **RHEL81H104K0□□H03□** | X8L (Murata) | 50Vdc | 0.10μF±10% | 3.6×3.5 | 2.5 | 5.0 | K1 | M1 |
| **RHEL81H154K1□□H03□** | X8L (Murata) | 50Vdc | 0.15μF±10% | 4.0×3.5 | 2.5 | 2.5 | A2 | DB |
| **RHEL81H154K1□□H03□** | X8L (Murata) | 50Vdc | 0.15μF±10% | 4.0×3.5 | 2.5 | 5.0 | K1 | M1 |
| **RHEL81H224K1□□H03□** | X8L (Murata) | 50Vdc | 0.22μF±10% | 4.0×3.5 | 2.5 | 2.5 | A2 | DB |
| **RHEL81H224K1□□H03□** | X8L (Murata) | 50Vdc | 0.22μF±10% | 4.0×3.5 | 2.5 | 5.0 | K1 | M1 |
| **RHEL81H334K1□□H03□** | X8L (Murata) | 50Vdc | 0.33μF±10% | 4.0×3.5 | 2.5 | 2.5 | A2 | DB |
| **RHEL81H334K1□□H03□** | X8L (Murata) | 50Vdc | 0.33μF±10% | 4.0×3.5 | 2.5 | 5.0 | K1 | M1 |
| **RHEL81H474K2□□H03□** | X8L (Murata) | 50Vdc | 0.47μF±10% | 5.5×4.0 | 3.15 | 2.5 | A2 | DB |
| **RHEL81H474K2□□H03□** | X8L (Murata) | 50Vdc | 0.47μF±10% | 5.5×4.0 | 3.15 | 5.0 | K1 | M1 |
| **RHEL81H684K2□□H03□** | X8L (Murata) | 50Vdc | 0.68μF±10% | 5.5×4.0 | 3.15 | 2.5 | A2 | DB |
| **RHEL81H684K2□□H03□** | X8L (Murata) | 50Vdc | 0.68μF±10% | 5.5×4.0 | 3.15 | 5.0 | K1 | M1 |
| **RHEL81H105K2□□H03□** | X8L (Murata) | 50Vdc | 1.0μF±10% | 5.5×4.0 | 3.15 | 2.5 | A2 | DB |
| **RHEL81H105K2□□H03□** | X8L (Murata) | 50Vdc | 1.0μF±10% | 5.5×4.0 | 3.15 | 5.0 | K1 | M1 |
| **RHEL81H155K2□□H03□** | X8L (Murata) | 50Vdc | 1.5μF±10% | 5.5×4.0 | 3.15 | 2.5 | A2 | DB |
| **RHEL81H155K2□□H03□** | X8L (Murata) | 50Vdc | 1.5μF±10% | 5.5×4.0 | 3.15 | 5.0 | K1 | M1 |
| **RHEL81H225K2□□H03□** | X8L (Murata) | 50Vdc | 2.2μF±10% | 5.5×4.0 | 3.15 | 2.5 | A2 | DB |
| **RHEL81H225K2□□H03□** | X8L (Murata) | 50Vdc | 2.2μF±10% | 5.5×4.0 | 3.15 | 5.0 | K1 | M1 |
| **RHEL81H335K3□□H03□** | X8L (Murata) | 50Vdc | 3.3μF±10% | 5.5×5.0 | 4.0 | 2.5 | A2 | DB |
| **RHEL81H335K3□□H03□** | X8L (Murata) | 50Vdc | 3.3μF±10% | 5.5×5.0 | 4.0 | 5.0 | K1 | M1 |
| **RHEL81H475K3□□H03□** | X8L (Murata) | 50Vdc | 4.7μF±10% | 5.5×5.0 | 4.0 | 2.5 | A2 | DB |
| **RHEL81H475K3□□H03□** | X8L (Murata) | 50Vdc | 4.7μF±10% | 5.5×5.0 | 4.0 | 5.0 | K1 | M1 |
| **RHEL81H106MW□□H03□** | X8L (Murata) | 50Vdc | 10μF±20% | 5.5×7.5 | 4.0 | 5.0 | K1 | M1 |
| **RHEL82A221K0□□H03□** | X8L (Murata) | 100Vdc | 220pF±10% | 3.6×3.5 | 2.5 | 2.5 | A2 | DB |
| **RHEL82A221K0□□H03□** | X8L (Murata) | 100Vdc | 220pF±10% | 3.6×3.5 | 2.5 | 5.0 | K1 | M1 |
| **RHEL82A331K0□□H03□** | X8L (Murata) | 100Vdc | 330pF±10% | 3.6×3.5 | 2.5 | 2.5 | A2 | DB |
| **RHEL82A331K0□□H03□** | X8L (Murata) | 100Vdc | 330pF±10% | 3.6×3.5 | 2.5 | 5.0 | K1 | M1 |
| **RHEL82A471K0□□H03□** | X8L (Murata) | 100Vdc | 470pF±10% | 3.6×3.5 | 2.5 | 2.5 | A2 | DB |
| **RHEL82A471K0□□H03□** | X8L (Murata) | 100Vdc | 470pF±10% | 3.6×3.5 | 2.5 | 5.0 | K1 | M1 |
| **RHEL82A681K0□□H03□** | X8L (Murata) | 100Vdc | 680pF±10% | 3.6×3.5 | 2.5 | 2.5 | A2 | DB |
| **RHEL82A681K0□□H03□** | X8L (Murata) | 100Vdc | 680pF±10% | 3.6×3.5 | 2.5 | 5.0 | K1 | M1 |
| **RHEL82A102K0□□H03□** | X8L (Murata) | 100Vdc | 1000pF±10% | 3.6×3.5 | 2.5 | 2.5 | A2 | DB |
| **RHEL82A102K0□□H03□** | X8L (Murata) | 100Vdc | 1000pF±10% | 3.6×3.5 | 2.5 | 5.0 | K1 | M1 |
| **RHEL82A152K0□□H03□** | X8L (Murata) | 100Vdc | 1500pF±10% | 3.6×3.5 | 2.5 | 2.5 | A2 | DB |
| **RHEL82A152K0□□H03□** | X8L (Murata) | 100Vdc | 1500pF±10% | 3.6×3.5 | 2.5 | 5.0 | K1 | M1 |
| **RHEL82A222K0□□H03□** | X8L (Murata) | 100Vdc | 2200pF±10% | 3.6×3.5 | 2.5 | 2.5 | A2 | DB |
| **RHEL82A222K0□□H03□** | X8L (Murata) | 100Vdc | 2200pF±10% | 3.6×3.5 | 2.5 | 5.0 | K1 | M1 |
| **RHEL82A332K0□□H03□** | X8L (Murata) | 100Vdc | 3300pF±10% | 3.6×3.5 | 2.5 | 2.5 | A2 | DB |
| **RHEL82A332K0□□H03□** | X8L (Murata) | 100Vdc | 3300pF±10% | 3.6×3.5 | 2.5 | 5.0 | K1 | M1 |
| **RHEL82A472K0□□H03□** | X8L (Murata) | 100Vdc | 4700pF±10% | 3.6×3.5 | 2.5 | 2.5 | A2 | DB |
| **RHEL82A472K0□□H03□** | X8L (Murata) | 100Vdc | 4700pF±10% | 3.6×3.5 | 2.5 | 5.0 | K1 | M1 |

Continued on the following page.

Continued from the preceding page.

| Part Number | Temp. Char. | Rated Voltage | Capacitance | Dimensions LxW (mm) | Dimension T (mm) | Lead Space F (mm) | Lead Style Code Bulk | Lead Style Code Taping |
|---|---|---|---|---|---|---|---|---|
| **RHEL82A682K0□□H03□** | X8L (Murata) | 100Vdc | 6800pF±10% | 3.6×3.5 | 2.5 | 2.5 | A2 | DB |
| **RHEL82A682K0□□H03□** | X8L (Murata) | 100Vdc | 6800pF±10% | 3.6×3.5 | 2.5 | 5.0 | K1 | M1 |
| **RHEL82A103K0□□H03□** | X8L (Murata) | 100Vdc | 10000pF±10% | 3.6×3.5 | 2.5 | 2.5 | A2 | DB |
| **RHEL82A103K0□□H03□** | X8L (Murata) | 100Vdc | 10000pF±10% | 3.6×3.5 | 2.5 | 5.0 | K1 | M1 |
| **RHEL82A153K0□□H03□** | X8L (Murata) | 100Vdc | 15000pF±10% | 3.6×3.5 | 2.5 | 2.5 | A2 | DB |
| **RHEL82A153K0□□H03□** | X8L (Murata) | 100Vdc | 15000pF±10% | 3.6×3.5 | 2.5 | 5.0 | K1 | M1 |
| **RHEL82A223K0□□H03□** | X8L (Murata) | 100Vdc | 22000pF±10% | 3.6×3.5 | 2.5 | 2.5 | A2 | DB |
| **RHEL82A223K0□□H03□** | X8L (Murata) | 100Vdc | 22000pF±10% | 3.6×3.5 | 2.5 | 5.0 | K1 | M1 |
| **RHEL82A333K1□□H03□** | X8L (Murata) | 100Vdc | 33000pF±10% | 4.0×3.5 | 2.5 | 2.5 | A2 | DB |
| **RHEL82A333K1□□H03□** | X8L (Murata) | 100Vdc | 33000pF±10% | 4.0×3.5 | 2.5 | 5.0 | K1 | M1 |
| **RHEL82A473K1□□H03□** | X8L (Murata) | 100Vdc | 47000pF±10% | 4.0×3.5 | 2.5 | 2.5 | A2 | DB |
| **RHEL82A473K1□□H03□** | X8L (Murata) | 100Vdc | 47000pF±10% | 4.0×3.5 | 2.5 | 5.0 | K1 | M1 |
| **RHEL82A683K1□□H03□** | X8L (Murata) | 100Vdc | 68000pF±10% | 4.0×3.5 | 2.5 | 2.5 | A2 | DB |
| **RHEL82A683K1□□H03□** | X8L (Murata) | 100Vdc | 68000pF±10% | 4.0×3.5 | 2.5 | 5.0 | K1 | M1 |
| **RHEL82A104K1□□H03□** | X8L (Murata) | 100Vdc | 0.10μF±10% | 4.0×3.5 | 2.5 | 2.5 | A2 | DB |
| **RHEL82A104K1□□H03□** | X8L (Murata) | 100Vdc | 0.10μF±10% | 4.0×3.5 | 2.5 | 5.0 | K1 | M1 |
| **RHEL82A154K2□□H03□** | X8L (Murata) | 100Vdc | 0.15μF±10% | 5.5×4.0 | 3.15 | 2.5 | A2 | DB |
| **RHEL82A154K2□□H03□** | X8L (Murata) | 100Vdc | 0.15μF±10% | 5.5×4.0 | 3.15 | 5.0 | K1 | M1 |
| **RHEL82A224K2□□H03□** | X8L (Murata) | 100Vdc | 0.22μF±10% | 5.5×4.0 | 3.15 | 2.5 | A2 | DB |
| **RHEL82A224K2□□H03□** | X8L (Murata) | 100Vdc | 0.22μF±10% | 5.5×4.0 | 3.15 | 5.0 | K1 | M1 |

Two blank columns are filled with the lead style code. Please refer to the 3 columns on the right for the appropriate code.
The last blank column is filled with the packaging code. (B: bulk, A: ammo pack)

# Specifications and Test Methods

| No. | AEC-Q200 Test Item | | Specification: Temperature Compensating Type (Char. X8G) | Specification: High Dielectric Constant Type (Char. X8L) | AEC-Q200 Test Method |
|---|---|---|---|---|---|
| 1 | Pre-and Post-Stress Electrical Test | | – | | |
| 2 | High Temperature Exposure (Storage) | | The measured and observed characteristics should satisfy the specifications in the following table. | | Sit the capacitor for 1,000±12h at 150±3°C. Let sit for 24±2h at room temperature, then measure. |
| | | Appearance | No defects or abnormalities | | |
| | | Capacitance Change | Within ±3% or ±0.3pF (Whichever is larger) | Within ±12.5% | |
| | | Q/D.F. | Q≧350 | 0.04 max. | |
| | | I.R. | More than 1,000MΩ or 50MΩ · μF (Whichever is smaller) | | |
| 3 | Temperature Cycling | | The measured and observed characteristics should satisfy the specifications in the following table. | | Perform the 1,000 cycles according to the four heat treatments listed in the following table. Let sit for 24±2h at *room condition, then measure. |
| | | Appearance | No defects or abnormalities except color change of outer coating | | |
| | | Capacitance Change | Within ±5% or ±0.5pF (Whichever is larger) | Within ±12.5% | |
| | | Q/D.F. | Q≧350 | 0.05 max. | |
| | | I.R. | 1,000MΩ or 50MΩ · μF min. (Whichever is smaller) | | |
| 4 | Moisture Resistance | | The measured and observed characteristics should satisfy the specifications in the following table. | | Apply the 24h heat (25 to 65°C) and humidity (80 to 98%) treatment shown below, 10 consecutive times. Let sit for 24±2h at *room condition, then measure. |
| | | Appearance | No defects or abnormalities | | |
| | | Capacitance Change | Within ±5% or ±0.5pF (Whichever is larger) | Within ±12.5% | |
| | | Q/D.F. | Q≧200 | 0.05 max. | |
| | | I.R. | 500MΩ or 25MΩ · μF min. (Whichever is smaller) | | |
| 5 | Biased Humidity | | The measured and observed characteristics should satisfy the specifications in the following table. | | Apply the rated voltage and DC1.3+0.2/-0V (add 6.8kΩ resistor) at 85±3°C and 80 to 85% humidity for 1,000±12h. Remove and let sit for 24±2h at *room condition, then measure. The charge/discharge current is less than 50mA. |
| | | Appearance | No defects or abnormalities | | |
| | | Capacitance Change | Within ±5% or ±0.5pF (Whichever is larger) | Within ±12.5% | |
| | | Q/D.F. | Q≧200 | 0.05 max. | |
| | | I.R. | 500MΩ or 25MΩ · μF min. (Whichever is smaller) | | |
| 6 | Operational Life | | The measured and observed characteristics should satisfy the specifications in the following table. | | Apply 150% of the rated voltage for 1,000±12h at 150±3°C. Let sit for 24±2h at *room condition, then measure. The charge/discharge current is less than 50mA. |
| | | Appearance | No defects or abnormalities except color change of outer coating | | |
| | | Capacitance Change | Within ±3% or ±0.3pF (Whichever is larger) | Within ±12.5% | |
| | | Q/D.F. | Q≧350 | 0.04 max. | |
| | | I.R. | 1,000MΩ or 50MΩ · μF min. (Whichever is smaller) | | |
| 7 | External Visual | | No defects or abnormalities | | Visual inspection |
| 8 | Physical Dimension | | Within the specified dimensions | | Using calipers and micrometers. |
| 9 | Marking | | To be easily legible. | | Visual inspection |

| Step | 1 | 2 | 3 | 4 |
|---|---|---|---|---|
| Temp. (°C) | -55+0/-3 | Room Temp. | 150+3/-0 | Room Temp. |
| Time (min.) | 15±3 | 1 | 15±3 | 1 |

•Pretreatment
Perform the heat treatment at 150+0/-10°C for 60±5 min and then let sit for 24±2h at *room condition. (for Char. X8L)

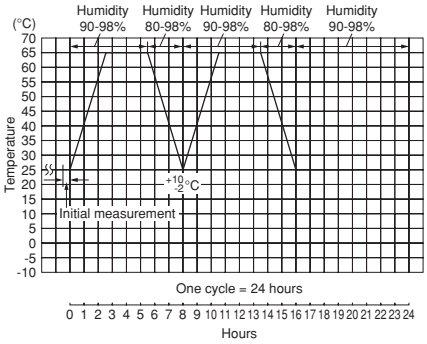


•Pretreatment
Perform the heat treatment at 150+0/-10°C for 60±5 min and then let sit for 24±2h at *room condition. (for Char. X8L)

* "room condition" Temperature: 15 to 35°C, Relative humidity: 45 to 75%, Atmosphere pressure: 86 to 106kPa

Continued on the following page.

# Specifications and Test Methods

Continued from the preceding page.

| No. | AEC-Q200 Test Item | | Specification: Temperature Compensating Type (Char. X8G) | Specification: High Dielectric Constant Type (Char. X8L) | AEC-Q200 Test Method |
|---|---|---|---|---|---|
| 10 | Resistance to Solvents | Appearance | No defects or abnormalities | | Per MIL-STD-202 Method 215<br>Solvent 1: 1 part (by volume) of isopropyl alcohol<br>3 parts (by volume) of mineral spirits<br>Solvent 2: Terpene defluxer<br>Solvent 3: 42 parts (by volume) of water<br>1 part (by volume) of propylene glycol monomethyl ether<br>1 part (by volume) of monoethanolamine |
| | | Capacitance | Within the specified tolerance | | |
| | | Q/D.F. | Q≧1,000 | 0.025 max. | |
| | | I.R. | More than 10,000MΩ or 500MΩ · μF (Whichever is smaller) | | |
| 11 | Mechanical Shock | Appearance | No defects or abnormalities | | Three shocks in each direction should be applied along 3 mutually perpendicular axes of the test specimen (18 shocks). The specified test pulse should be Half-sine and should have a duration: 0.5ms, peak value: 1,500G and velocity change: 4.7m/s. |
| | | Capacitance | Within the specified tolerance | | |
| | | Q/D.F. | Q≧1,000 | 0.025 max. | |
| 12 | Vibration | Appearance | No defects or abnormalities | | The capacitor should be subjected to a simple harmonic motion having a total amplitude of 1.5mm, the frequency being varied uniformly between the approximate limits of 10 and 2,000Hz. The frequency range, from 10 to 2,000Hz and return to 10Hz, should be traversed in approximately 20min. This motion should be applied for 12 items in each 3 mutually perpendicular directions (total of 36 times). |
| | | Capacitance | Within the specified tolerance | | |
| | | Q/D.F. | Q≧1,000 | 0.025 max. | |
| 13 | Resistance to Soldering Heat | | The measured and observed characteristics should satisfy the specifications in the following table. | | The lead wire is immersed in the melted solder 1.5 to 2mm from the main body at 260±5°C for 10±1s. The specified items are measured after 24±2h.<br>•Pretreatment<br>Perform the heat treatment at 150+0/-10°C for 60±5 min and then let sit for 24±2h at *room condition. (for Char. X8L) |
| | | Appearance | No defects or abnormalities | | |
| | | Capacitance Change | Within ±2.5% or ±0.25pF (Whichever is larger) | Within ±7.5% | |
| | | Dielectric Strength (Between Terminals) | No defects | | |
| 14 | Thermal Shock | | The measured and observed characteristics should satisfy the specifications in the following table. | | Perform the 300 cycles according to the two heat treatments listed in the following table (Maximum transfer time is 20s.). Let sit for 24±2h at *room condition, then measure.<br>Step 1: Temp. (°C) -55+0/-3, Time (min.) 15±3<br>Step 2: Temp. (°C) 150+3/-0, Time (min.) 15±3<br>•Pretreatment<br>Perform the heat treatment at 150+0/-10°C for 60±5min and then let sit for 24±2h at *room condition. (for Char. X8L) |
| | | Appearance | No defects or abnormalities | | |
| | | Capacitance Change | Within ±5% or ±0.5pF (Whichever is larger) | Within ±12.5% | |
| | | Q/D.F. | Q≧350 | 0.05 max. | |
| | | I.R. | 1,000MΩ or 50MΩ · μF min. (Whichever is smaller) | | |
| 15 | ESD | Appearance | No defects or abnormalities | | Per AEC-Q200-004 |
| | | Capacitance | Within the specified tolerance | | |
| | | Q/D.F. | Q≧1,000 | 0.025 max. | |
| | | I.R. | More than 10,000MΩ or 500MΩ · μF (Whichever is smaller) | | |
| 16 | Solderability | | Lead wire should be soldered with uniform coating on the axial direction over 95% of the circumferential direction. | | The terminal of a capacitor is dipped into a solution of ethanol (JIS-K-8101) and rosin (JIS-K-5902) (25%rosin in weight propotion) and then into molten solder (JIS-Z-3282) for 2±0.5 sec. In both cases the depth of dipping is up to about 1.5 to 2mm from the terminal body.<br>Temp. of solder:<br>245±5°C Lead Free Solder (Sn-3.0Ag-0.5Cu)<br>235±5°C H60A or H63A Eutectic Solder |

* "room condition" Temperature: 15 to 35°C, Relative humidity: 45 to 75%, Atmosphere pressure: 86 to 106kPa

Continued on the following page.

# Specifications and Test Methods

Continued from the preceding page.

| No. | AEC-Q200 Test Item | | Specification: Temperature Compensating Type (Char. X8G) | Specification: High Dielectric Constant Type (Char. X8L) | AEC-Q200 Test Method |
|---|---|---|---|---|---|
| 17 | Electrical Characterization | Appearance | No defects or abnormalities | | Visual inspection. |
| | | Capacitance | Within the specified tolerance | | The capacitance, Q/D.F. should be measured at 25°C at the frequency and voltage shown in the table. |
| | | Q/D.F. | Q≧1,000 | 0.025 max. | |

| Char. | Nominal Cap. | Frequency | Voltage |
|---|---|---|---|
| X8G | C≦1,000pF | 1±0.1MHz | AC0.5 to 5V (r.m.s.) |
| X8G | C>1000pF | 1±0.1kHz | AC1±0.2V (r.m.s.) |
| X8L | – | 1±0.1kHz | AC1±0.2V (r.m.s.) |

| No. | AEC-Q200 Test Item | | Specification | | AEC-Q200 Test Method |
|---|---|---|---|---|---|
| 17 | Electrical Characterization | Insulation Resistance (I.R.) | Room Temperature | 10,000MΩ or 500MΩ · μF min. (Whichever is smaller) | The insulation resistance should be measured at 25±3°C with a DC voltage not exceeding the rated voltage at normal temperature and humidity and within 2min. of charging. (Charge/Discharge current ≦ 50mA.) |
| | | | High Temperature | 100MΩ or 5MΩ · μF min. (Whichever is smaller) | The insulation resistance should be measured at 150±3°C with a DC voltage not exceeding the rated voltage at normal temperature and humidity and within 2min. of charging. (Charge/Discharge current ≦ 50mA.) |
| | | Dielectric Strength | Between Terminals | No defects or abnormalities | The capacitor should not be damaged when DC voltage of 300% of the rated voltage (for Char. X8G) or DC voltage of 250% of the rated voltage (for Char. X8L) is applied between the terminations for 1 to 5 seconds. (Charge/Discharge current ≦ 50mA.) |
| | | | Body Insulation | No defects or abnormalities | The capacitor is placed in a container with metal balls of 1mm diameter so that each terminal, short-circuit is kept approximately 2mm from the balls, and 250% of the rated DC voltage is impressed for 1 to 5 seconds between capacitor terminals and metal balls. (Charge/Discharge current ≦ 50mA.) 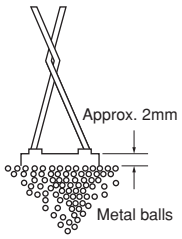  |
| 18 | Terminal Strength | Tensile Strength | Termination not to be broken or loosened | | As in the figure, fix the capacitor body, apply the force gradually to each lead in the radial direction of the capacitor until reaching 10N and then keep the force applied for 10±1 seconds. 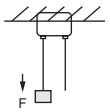  |
| | | Bending Strength | Termination not to be broken or loosened | | Each lead wire should be subjected to a force of 2.5N and then be bent 90° at the point of egress in one direction. Each wire is then returned to the original position and bent 90° in the opposite direction at the rate of one bend per 2 to 3 seconds. |
| 19 | Capacitance Temperature Characteristics | | Within the specified Tolerance. (Table A)<br><br>Capacitance Drift is within ±0.2% or ±0.05pF (Whichever is larger) | Within ±15% (Temp. Range: -55 to +125°C)<br>Within +15/-40% (Temp. Range: +125 to +150°C) | The capacitance change should be measured after 5min. at each specified temperature step. |

| Step | Temperature (°C) |
|---|---|
| 1 | 25±2 |
| 2 | -55±3 |
| 3 | 25±2 |
| 4 | 150±3 |
| 5 | 25±2 |

The temperature coefficient or the ranges of capacitance change is determined using the capacitance measured in step 3 as a reference.
•Pretreatment
Perform the heat treatment at 150+0/-10°C for 60±5 min and then let sit for 24±2h at *room condition.
Perform the initial measurement. (for Char. X8L)

* "room condition" Temperature: 15 to 35°C, Relative humidity: 45 to 75%, Atmosphere pressure: 86 to 106kPa

## Table A

| Char. | Nominal Values (ppm/°C) * | Capacitance Change from 25°C (%) | | | | | |
|---|---|---|---|---|---|---|---|
| | | –55°C | | –30°C | | –10°C | |
| | | Max. | Min. | Max. | Min. | Max. | Min. |
| X8G | 0±30 | 0.58 | –0.24 | 0.40 | –0.17 | 0.25 | –0.11 |

* Nominal values denote the temperature coefficient within a range of 25°C to 150°C.

# Radial Lead Type Monolithic Ceramic Capacitors

muRata

## RDE Series (For General Use Only) (DC25V-DC1kV)



### ■ Features

1. Small size and large capacitance
2. Low ESR characteristics for high frequency
3. Meet LF (Lead Free) and HF (Halogen Free)
4. Flow soldering is available, but re-flow soldering is not available.

### ■ Applications

General electronic equipment
(Do not use for automotive-related power train and safety equipment.)

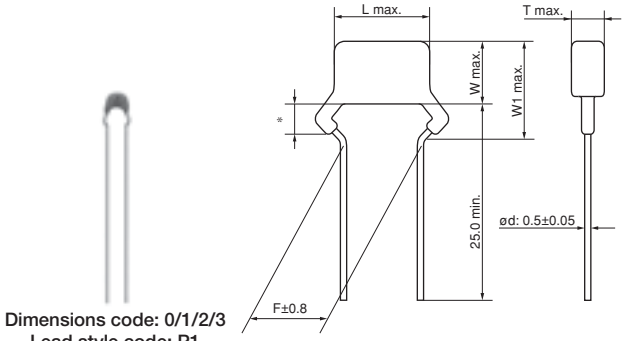


Dimensions code: 0/1/2/3
Lead style code: P1

∗ Coating extension does not exceed the end of the lead bend.
· Lead Wire: Solder Coated CP Wire

(in mm)

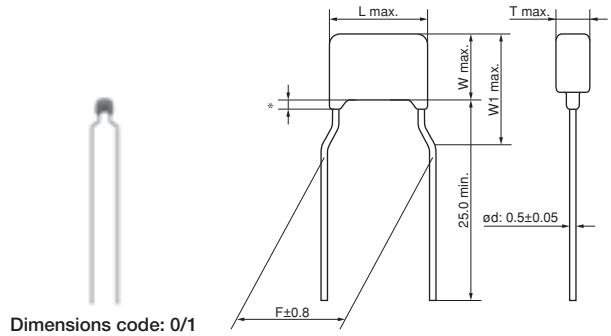


Dimensions code: 0/1
Lead style code: K1

∗ Coating extension does not exceed the end of the lead bend.
· Lead Wire: Solder Coated CP Wire

(in mm)

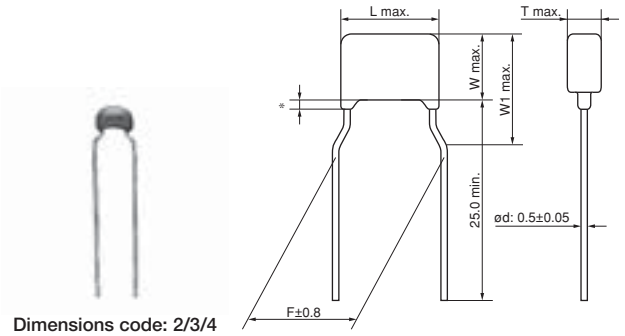


Dimensions code: 2/3/4
Lead style code: K1

∗ Coating extension does not exceed the end of the lead bend.
· Lead Wire: Solder Coated CP Wire

(in mm)

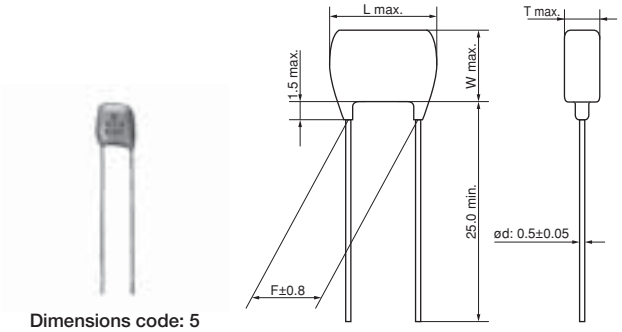


Dimensions code: 5
Lead style code: B1

· Lead Wire: Solder Coated CP Wire

(in mm)

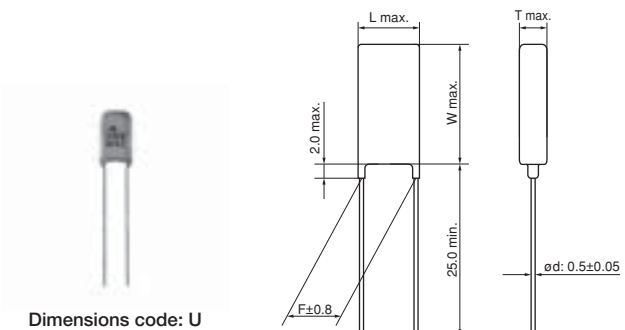


Dimensions code: U
Lead style code: B1

· Lead Wire: Solder Coated CP Wire

(in mm)

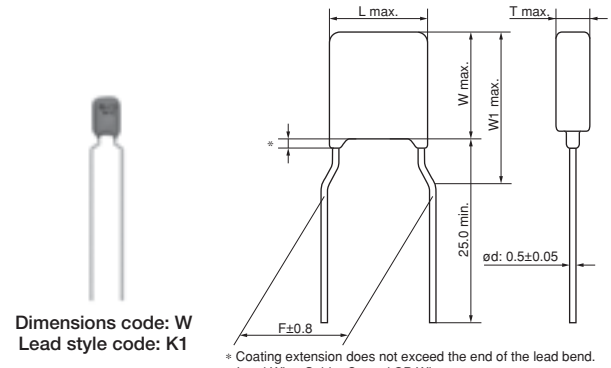


Dimensions code: W
Lead style code: K1

∗ Coating extension does not exceed the end of the lead bend.
· Lead Wire: Solder Coated CP Wire

(in mm)

### ■ Dimensions

| Dimensions and Lead Style Code | Dimensions (mm) | | | | | |
|---|---|---|---|---|---|---|
| | L | W | W1 | T | F | d |
| 0P1/0S1 | 5.0 | 3.5 | 6.0 | See the individual product specification | 2.5 | 0.5 |
| 0K1/0M1 | 4.0 | 3.5 | 6.0 | | 5.0 | 0.5 |
| 1P1/1S1 | 5.0 | 3.5 | 5.0 | | 2.5 | 0.5 |
| 1K1/1M1 | 4.5 | 3.5 | 5.0 | | 5.0 | 0.5 |
| 2P1/2S1 | 5.5 | 4.0 | 6.0 | | 2.5 | 0.5 |
| 2K1/2M1 | 5.5 | 4.0 | 6.0 | | 5.0 | 0.5 |
| 3P1/3S1 | 5.5 | 5.0 | 7.5 | | 2.5 | 0.5 |
| 3K1/3M1 | 5.5 | 5.0 | 7.5 | | 5.0 | 0.5 |
| 4K1/4M1 | 7.5 | 5.5 | 8.0 | | 5.0 | 0.5 |
| 5B1/5E1 | 7.5 | 7.5* | - | | 5.0 | 0.5 |
| UB1/UE1 | 7.7 | 12.5* | - | | 5.0 | 0.5 |
| WK1/WM1 | 5.5 | 7.5 | 10.0 | | 5.0 | 0.5 |

*DC630V, DC1kV: W+0.5mm

## ■ Marking

| Dimensions Code \ Rated Voltage | DC25V | | DC50V | | | | | DC100V | | | DC250V | DC630V | DC1kV |
|---|---|---|---|---|---|---|---|---|---|---|---|---|---|
| Temp. Char. | X7S | X7R | C0G | X7S | X7R | F | Y5V | C0G | X7S | X7R | X7R, U2J | | |
| 0 | 224K | 104K | A 102J | – | 224K | 473 | 103Z | A 102J | – | 224K | – | – | – |
| 1 | | – | | – | | – | – | | – | | U 102J | – | – |
| 2 | Ⓜ 475 K2C | – | – | Ⓜ 475 K5C | Ⓜ 105 K5C | – | – | – | – | Ⓜ 105 K1C | Ⓜ 103 J4U (U2J)<br>Ⓜ 473 K4C (X7R) | Ⓜ 472 J7U (U2J)<br>Ⓜ 153 K7C (X7R) | Ⓜ 102 JAU (U2J)<br>Ⓜ 102 KAC (X7R) |
| 3, 4, W | Ⓜ 226 K2C | – | – | – | Ⓜ 335 K5C | – | – | – | Ⓜ 225 K1C | – | Ⓜ 473 J4U (U2J)<br>Ⓜ 224 K4C (X7R) | Ⓜ 103 J7U (U2J)<br>Ⓜ 104 K7C (X7R) | Ⓜ 472 JAU (U2J)<br>Ⓜ 333 KAC (X7R) |
| 5, U | – | – | – | – | – | – | – | – | – | – | – | Ⓜ 333 J7U (U2J)<br>Ⓜ 474 M7C (X7R) | Ⓜ 103 JAU (U2J)<br>Ⓜ 104 KAC (X7R) |

| | |
|---|---|
| Temperature Characteristics | Marked with code (C0G char.: A, X7S/X7R char.: C, F/Y5V char.: F, U2J char.: U)<br>A part is omitted (Please refer to the marking example.) |
| Nominal Capacitance | Under 100pF: Actual value 100pF and over: Marked with 3 figures |
| Capacitance Tolerance | Marked with code<br>A part is omitted (Please refer to the marking example.) |
| Rated Voltage | Marked with code (DC25V: 2, DC50V: 5, DC100V: 1, DC250V: 4, DC630V: 7, DC1kV: A)<br>Lower horizontal line for F char.<br>A part is omitted (Please refer to the marking example.) |
| Manufacturer's Identification | Marked with Ⓜ<br>A part is omitted (Please refer to the marking example.) |

## Temperature Compensating Type, C0G/U2J Characteristics

| Part Number | Temp. Char. | Rated Voltage | Capacitance | Dimensions LxW (mm) | Dimension T (mm) | Lead Space F (mm) | Lead Style Code Bulk | Lead Style Code Taping |
|---|---|---|---|---|---|---|---|---|
| **RDE5C1H1R0C0□□H03□** | C0G (EIA) | 50Vdc | 1.0pF±0.25pF | 4.0×3.5 | 2.5 | 5.0 | K1 | M1 |
| **RDE5C1H1R0C0□□H03□** | C0G (EIA) | 50Vdc | 1.0pF±0.25pF | 5.0×3.5 | 2.5 | 2.5 | P1 | S1 |
| **RDE5C1H2R0C0□□H03□** | C0G (EIA) | 50Vdc | 2.0pF±0.25pF | 4.0×3.5 | 2.5 | 5.0 | K1 | M1 |
| **RDE5C1H2R0C0□□H03□** | C0G (EIA) | 50Vdc | 2.0pF±0.25pF | 5.0×3.5 | 2.5 | 2.5 | P1 | S1 |
| **RDE5C1H3R0C0□□H03□** | C0G (EIA) | 50Vdc | 3.0pF±0.25pF | 4.0×3.5 | 2.5 | 5.0 | K1 | M1 |
| **RDE5C1H3R0C0□□H03□** | C0G (EIA) | 50Vdc | 3.0pF±0.25pF | 5.0×3.5 | 2.5 | 2.5 | P1 | S1 |
| **RDE5C1H4R0C0□□H03□** | C0G (EIA) | 50Vdc | 4.0pF±0.25pF | 4.0×3.5 | 2.5 | 5.0 | K1 | M1 |
| **RDE5C1H4R0C0□□H03□** | C0G (EIA) | 50Vdc | 4.0pF±0.25pF | 5.0×3.5 | 2.5 | 2.5 | P1 | S1 |
| **RDE5C1H5R0C0□□H03□** | C0G (EIA) | 50Vdc | 5.0pF±0.25pF | 4.0×3.5 | 2.5 | 5.0 | K1 | M1 |
| **RDE5C1H5R0C0□□H03□** | C0G (EIA) | 50Vdc | 5.0pF±0.25pF | 5.0×3.5 | 2.5 | 2.5 | P1 | S1 |
| **RDE5C1H6R0D0□□H03□** | C0G (EIA) | 50Vdc | 6.0pF±0.5pF | 4.0×3.5 | 2.5 | 5.0 | K1 | M1 |
| **RDE5C1H6R0D0□□H03□** | C0G (EIA) | 50Vdc | 6.0pF±0.5pF | 5.0×3.5 | 2.5 | 2.5 | P1 | S1 |
| **RDE5C1H7R0D0□□H03□** | C0G (EIA) | 50Vdc | 7.0pF±0.5pF | 4.0×3.5 | 2.5 | 5.0 | K1 | M1 |
| **RDE5C1H7R0D0□□H03□** | C0G (EIA) | 50Vdc | 7.0pF±0.5pF | 5.0×3.5 | 2.5 | 2.5 | P1 | S1 |

Continued on the following page.

Continued from the preceding page.

| Part Number | Temp. Char. | Rated Voltage | Capacitance | Dimensions LxW (mm) | Dimension T (mm) | Lead Space F (mm) | Lead Style Code Bulk | Lead Style Code Taping |
|---|---|---|---|---|---|---|---|---|
| **RDE5C1H8R0D0□□H03□** | C0G (EIA) | 50Vdc | 8.0pF±0.5pF | 4.0×3.5 | 2.5 | 5.0 | K1 | M1 |
| **RDE5C1H8R0D0□□H03□** | C0G (EIA) | 50Vdc | 8.0pF±0.5pF | 5.0×3.5 | 2.5 | 2.5 | P1 | S1 |
| **RDE5C1H9R0D0□□H03□** | C0G (EIA) | 50Vdc | 9.0pF±0.5pF | 4.0×3.5 | 2.5 | 5.0 | K1 | M1 |
| **RDE5C1H9R0D0□□H03□** | C0G (EIA) | 50Vdc | 9.0pF±0.5pF | 5.0×3.5 | 2.5 | 2.5 | P1 | S1 |
| **RDE5C1H100J0□□H03□** | C0G (EIA) | 50Vdc | 10pF±5% | 4.0×3.5 | 2.5 | 5.0 | K1 | M1 |
| **RDE5C1H100J0□□H03□** | C0G (EIA) | 50Vdc | 10pF±5% | 5.0×3.5 | 2.5 | 2.5 | P1 | S1 |
| **RDE5C1H120J0□□H03□** | C0G (EIA) | 50Vdc | 12pF±5% | 4.0×3.5 | 2.5 | 5.0 | K1 | M1 |
| **RDE5C1H120J0□□H03□** | C0G (EIA) | 50Vdc | 12pF±5% | 5.0×3.5 | 2.5 | 2.5 | P1 | S1 |
| **RDE5C1H150J0□□H03□** | C0G (EIA) | 50Vdc | 15pF±5% | 4.0×3.5 | 2.5 | 5.0 | K1 | M1 |
| **RDE5C1H150J0□□H03□** | C0G (EIA) | 50Vdc | 15pF±5% | 5.0×3.5 | 2.5 | 2.5 | P1 | S1 |
| **RDE5C1H180J0□□H03□** | C0G (EIA) | 50Vdc | 18pF±5% | 4.0×3.5 | 2.5 | 5.0 | K1 | M1 |
| **RDE5C1H180J0□□H03□** | C0G (EIA) | 50Vdc | 18pF±5% | 5.0×3.5 | 2.5 | 2.5 | P1 | S1 |
| **RDE5C1H220J0□□H03□** | C0G (EIA) | 50Vdc | 22pF±5% | 4.0×3.5 | 2.5 | 5.0 | K1 | M1 |
| **RDE5C1H220J0□□H03□** | C0G (EIA) | 50Vdc | 22pF±5% | 5.0×3.5 | 2.5 | 2.5 | P1 | S1 |
| **RDE5C1H270J0□□H03□** | C0G (EIA) | 50Vdc | 27pF±5% | 4.0×3.5 | 2.5 | 5.0 | K1 | M1 |
| **RDE5C1H270J0□□H03□** | C0G (EIA) | 50Vdc | 27pF±5% | 5.0×3.5 | 2.5 | 2.5 | P1 | S1 |
| **RDE5C1H330J0□□H03□** | C0G (EIA) | 50Vdc | 33pF±5% | 4.0×3.5 | 2.5 | 5.0 | K1 | M1 |
| **RDE5C1H330J0□□H03□** | C0G (EIA) | 50Vdc | 33pF±5% | 5.0×3.5 | 2.5 | 2.5 | P1 | S1 |
| **RDE5C1H390J0□□H03□** | C0G (EIA) | 50Vdc | 39pF±5% | 4.0×3.5 | 2.5 | 5.0 | K1 | M1 |
| **RDE5C1H390J0□□H03□** | C0G (EIA) | 50Vdc | 39pF±5% | 5.0×3.5 | 2.5 | 2.5 | P1 | S1 |
| **RDE5C1H470J0□□H03□** | C0G (EIA) | 50Vdc | 47pF±5% | 4.0×3.5 | 2.5 | 5.0 | K1 | M1 |
| **RDE5C1H470J0□□H03□** | C0G (EIA) | 50Vdc | 47pF±5% | 5.0×3.5 | 2.5 | 2.5 | P1 | S1 |
| **RDE5C1H560J0□□H03□** | C0G (EIA) | 50Vdc | 56pF±5% | 4.0×3.5 | 2.5 | 5.0 | K1 | M1 |
| **RDE5C1H560J0□□H03□** | C0G (EIA) | 50Vdc | 56pF±5% | 5.0×3.5 | 2.5 | 2.5 | P1 | S1 |
| **RDE5C1H680J0□□H03□** | C0G (EIA) | 50Vdc | 68pF±5% | 4.0×3.5 | 2.5 | 5.0 | K1 | M1 |
| **RDE5C1H680J0□□H03□** | C0G (EIA) | 50Vdc | 68pF±5% | 5.0×3.5 | 2.5 | 2.5 | P1 | S1 |
| **RDE5C1H820J0□□H03□** | C0G (EIA) | 50Vdc | 82pF±5% | 4.0×3.5 | 2.5 | 5.0 | K1 | M1 |
| **RDE5C1H820J0□□H03□** | C0G (EIA) | 50Vdc | 82pF±5% | 5.0×3.5 | 2.5 | 2.5 | P1 | S1 |
| **RDE5C1H101J0□□H03□** | C0G (EIA) | 50Vdc | 100pF±5% | 4.0×3.5 | 2.5 | 5.0 | K1 | M1 |
| **RDE5C1H101J0□□H03□** | C0G (EIA) | 50Vdc | 100pF±5% | 5.0×3.5 | 2.5 | 2.5 | P1 | S1 |
| **RDE5C1H121J0□□H03□** | C0G (EIA) | 50Vdc | 120pF±5% | 4.0×3.5 | 2.5 | 5.0 | K1 | M1 |
| **RDE5C1H121J0□□H03□** | C0G (EIA) | 50Vdc | 120pF±5% | 5.0×3.5 | 2.5 | 2.5 | P1 | S1 |
| **RDE5C1H151J0□□H03□** | C0G (EIA) | 50Vdc | 150pF±5% | 4.0×3.5 | 2.5 | 5.0 | K1 | M1 |
| **RDE5C1H151J0□□H03□** | C0G (EIA) | 50Vdc | 150pF±5% | 5.0×3.5 | 2.5 | 2.5 | P1 | S1 |
| **RDE5C1H181J0□□H03□** | C0G (EIA) | 50Vdc | 180pF±5% | 4.0×3.5 | 2.5 | 5.0 | K1 | M1 |
| **RDE5C1H181J0□□H03□** | C0G (EIA) | 50Vdc | 180pF±5% | 5.0×3.5 | 2.5 | 2.5 | P1 | S1 |
| **RDE5C1H221J0□□H03□** | C0G (EIA) | 50Vdc | 220pF±5% | 4.0×3.5 | 2.5 | 5.0 | K1 | M1 |
| **RDE5C1H221J0□□H03□** | C0G (EIA) | 50Vdc | 220pF±5% | 5.0×3.5 | 2.5 | 2.5 | P1 | S1 |
| **RDE5C1H271J0□□H03□** | C0G (EIA) | 50Vdc | 270pF±5% | 4.0×3.5 | 2.5 | 5.0 | K1 | M1 |
| **RDE5C1H271J0□□H03□** | C0G (EIA) | 50Vdc | 270pF±5% | 5.0×3.5 | 2.5 | 2.5 | P1 | S1 |
| **RDE5C1H331J0□□H03□** | C0G (EIA) | 50Vdc | 330pF±5% | 4.0×3.5 | 2.5 | 5.0 | K1 | M1 |
| **RDE5C1H331J0□□H03□** | C0G (EIA) | 50Vdc | 330pF±5% | 5.0×3.5 | 2.5 | 2.5 | P1 | S1 |
| **RDE5C1H391J0□□H03□** | C0G (EIA) | 50Vdc | 390pF±5% | 4.0×3.5 | 2.5 | 5.0 | K1 | M1 |
| **RDE5C1H391J0□□H03□** | C0G (EIA) | 50Vdc | 390pF±5% | 5.0×3.5 | 2.5 | 2.5 | P1 | S1 |
| **RDE5C1H471J0□□H03□** | C0G (EIA) | 50Vdc | 470pF±5% | 4.0×3.5 | 2.5 | 5.0 | K1 | M1 |
| **RDE5C1H471J0□□H03□** | C0G (EIA) | 50Vdc | 470pF±5% | 5.0×3.5 | 2.5 | 2.5 | P1 | S1 |
| **RDE5C1H561J0□□H03□** | C0G (EIA) | 50Vdc | 560pF±5% | 4.0×3.5 | 2.5 | 5.0 | K1 | M1 |
| **RDE5C1H561J0□□H03□** | C0G (EIA) | 50Vdc | 560pF±5% | 5.0×3.5 | 2.5 | 2.5 | P1 | S1 |
| **RDE5C1H681J0□□H03□** | C0G (EIA) | 50Vdc | 680pF±5% | 4.0×3.5 | 2.5 | 5.0 | K1 | M1 |
| **RDE5C1H681J0□□H03□** | C0G (EIA) | 50Vdc | 680pF±5% | 5.0×3.5 | 2.5 | 2.5 | P1 | S1 |
| **RDE5C1H821J0□□H03□** | C0G (EIA) | 50Vdc | 820pF±5% | 4.0×3.5 | 2.5 | 5.0 | K1 | M1 |
| **RDE5C1H821J0□□H03□** | C0G (EIA) | 50Vdc | 820pF±5% | 5.0×3.5 | 2.5 | 2.5 | P1 | S1 |
| **RDE5C1H102J0□□H03□** | C0G (EIA) | 50Vdc | 1000pF±5% | 4.0×3.5 | 2.5 | 5.0 | K1 | M1 |
| **RDE5C1H102J0□□H03□** | C0G (EIA) | 50Vdc | 1000pF±5% | 5.0×3.5 | 2.5 | 2.5 | P1 | S1 |
| **RDE5C1H122J0□□H03□** | C0G (EIA) | 50Vdc | 1200pF±5% | 4.0×3.5 | 2.5 | 5.0 | K1 | M1 |
| **RDE5C1H122J0□□H03□** | C0G (EIA) | 50Vdc | 1200pF±5% | 5.0×3.5 | 2.5 | 2.5 | P1 | S1 |
| **RDE5C1H152J0□□H03□** | C0G (EIA) | 50Vdc | 1500pF±5% | 4.0×3.5 | 2.5 | 5.0 | K1 | M1 |

Continued on the following page.

Continued from the preceding page.

| Part Number | Temp. Char. | Rated Voltage | Capacitance | Dimensions LxW (mm) | Dimension T (mm) | Lead Space F (mm) | Lead Style Code Bulk | Lead Style Code Taping |
|---|---|---|---|---|---|---|---|---|
| **RDE5C1H152J0□□H03□** | C0G (EIA) | 50Vdc | 1500pF±5% | 5.0×3.5 | 2.5 | 2.5 | P1 | S1 |
| **RDE5C1H182J0□□H03□** | C0G (EIA) | 50Vdc | 1800pF±5% | 4.0×3.5 | 2.5 | 5.0 | K1 | M1 |
| **RDE5C1H182J0□□H03□** | C0G (EIA) | 50Vdc | 1800pF±5% | 5.0×3.5 | 2.5 | 2.5 | P1 | S1 |
| **RDE5C1H222J0□□H03□** | C0G (EIA) | 50Vdc | 2200pF±5% | 4.0×3.5 | 2.5 | 5.0 | K1 | M1 |
| **RDE5C1H222J0□□H03□** | C0G (EIA) | 50Vdc | 2200pF±5% | 5.0×3.5 | 2.5 | 2.5 | P1 | S1 |
| **RDE5C1H272J0□□H03□** | C0G (EIA) | 50Vdc | 2700pF±5% | 4.0×3.5 | 2.5 | 5.0 | K1 | M1 |
| **RDE5C1H272J0□□H03□** | C0G (EIA) | 50Vdc | 2700pF±5% | 5.0×3.5 | 2.5 | 2.5 | P1 | S1 |
| **RDE5C1H332J0□□H03□** | C0G (EIA) | 50Vdc | 3300pF±5% | 4.0×3.5 | 2.5 | 5.0 | K1 | M1 |
| **RDE5C1H332J0□□H03□** | C0G (EIA) | 50Vdc | 3300pF±5% | 5.0×3.5 | 2.5 | 2.5 | P1 | S1 |
| **RDE5C1H392J0□□H03□** | C0G (EIA) | 50Vdc | 3900pF±5% | 4.0×3.5 | 2.5 | 5.0 | K1 | M1 |
| **RDE5C1H392J0□□H03□** | C0G (EIA) | 50Vdc | 3900pF±5% | 5.0×3.5 | 2.5 | 2.5 | P1 | S1 |
| **RDE5C1H472J1□□H03□** | C0G (EIA) | 50Vdc | 4700pF±5% | 4.5×3.5 | 3.15 | 5.0 | K1 | M1 |
| **RDE5C1H472J1□□H03□** | C0G (EIA) | 50Vdc | 4700pF±5% | 5.0×3.5 | 3.15 | 2.5 | P1 | S1 |
| **RDE5C1H562J1□□H03□** | C0G (EIA) | 50Vdc | 5600pF±5% | 4.5×3.5 | 3.15 | 5.0 | K1 | M1 |
| **RDE5C1H562J1□□H03□** | C0G (EIA) | 50Vdc | 5600pF±5% | 5.0×3.5 | 3.15 | 2.5 | P1 | S1 |
| **RDE5C1H682J1□□H03□** | C0G (EIA) | 50Vdc | 6800pF±5% | 4.5×3.5 | 3.15 | 5.0 | K1 | M1 |
| **RDE5C1H682J1□□H03□** | C0G (EIA) | 50Vdc | 6800pF±5% | 5.0×3.5 | 3.15 | 2.5 | P1 | S1 |
| **RDE5C1H822J1□□H03□** | C0G (EIA) | 50Vdc | 8200pF±5% | 4.5×3.5 | 3.15 | 5.0 | K1 | M1 |
| **RDE5C1H822J1□□H03□** | C0G (EIA) | 50Vdc | 8200pF±5% | 5.0×3.5 | 3.15 | 2.5 | P1 | S1 |
| **RDE5C1H103J1□□H03□** | C0G (EIA) | 50Vdc | 10000pF±5% | 4.5×3.5 | 3.15 | 5.0 | K1 | M1 |
| **RDE5C1H103J1□□H03□** | C0G (EIA) | 50Vdc | 10000pF±5% | 5.0×3.5 | 3.15 | 2.5 | P1 | S1 |
| **RDE5C1H123J1□□H03□** | C0G (EIA) | 50Vdc | 12000pF±5% | 4.5×3.5 | 3.15 | 5.0 | K1 | M1 |
| **RDE5C1H123J1□□H03□** | C0G (EIA) | 50Vdc | 12000pF±5% | 5.0×3.5 | 3.15 | 2.5 | P1 | S1 |
| **RDE5C1H153J1□□H03□** | C0G (EIA) | 50Vdc | 15000pF±5% | 4.5×3.5 | 3.15 | 5.0 | K1 | M1 |
| **RDE5C1H153J1□□H03□** | C0G (EIA) | 50Vdc | 15000pF±5% | 5.0×3.5 | 3.15 | 2.5 | P1 | S1 |
| **RDE5C1H183J1□□H03□** | C0G (EIA) | 50Vdc | 18000pF±5% | 4.5×3.5 | 3.15 | 5.0 | K1 | M1 |
| **RDE5C1H183J1□□H03□** | C0G (EIA) | 50Vdc | 18000pF±5% | 5.0×3.5 | 3.15 | 2.5 | P1 | S1 |
| **RDE5C1H223J1□□H03□** | C0G (EIA) | 50Vdc | 22000pF±5% | 4.5×3.5 | 3.15 | 5.0 | K1 | M1 |
| **RDE5C1H223J1□□H03□** | C0G (EIA) | 50Vdc | 22000pF±5% | 5.0×3.5 | 3.15 | 2.5 | P1 | S1 |
| **RDE5C2A1R0C0□□H03□** | C0G (EIA) | 100Vdc | 1.0pF±0.25pF | 4.0×3.5 | 2.5 | 5.0 | K1 | M1 |
| **RDE5C2A1R0C0□□H03□** | C0G (EIA) | 100Vdc | 1.0pF±0.25pF | 5.0×3.5 | 2.5 | 2.5 | P1 | S1 |
| **RDE5C2A2R0C0□□H03□** | C0G (EIA) | 100Vdc | 2.0pF±0.25pF | 4.0×3.5 | 2.5 | 5.0 | K1 | M1 |
| **RDE5C2A2R0C0□□H03□** | C0G (EIA) | 100Vdc | 2.0pF±0.25pF | 5.0×3.5 | 2.5 | 2.5 | P1 | S1 |
| **RDE5C2A3R0C0□□H03□** | C0G (EIA) | 100Vdc | 3.0pF±0.25pF | 4.0×3.5 | 2.5 | 5.0 | K1 | M1 |
| **RDE5C2A3R0C0□□H03□** | C0G (EIA) | 100Vdc | 3.0pF±0.25pF | 5.0×3.5 | 2.5 | 2.5 | P1 | S1 |
| **RDE5C2A4R0C0□□H03□** | C0G (EIA) | 100Vdc | 4.0pF±0.25pF | 4.0×3.5 | 2.5 | 5.0 | K1 | M1 |
| **RDE5C2A4R0C0□□H03□** | C0G (EIA) | 100Vdc | 4.0pF±0.25pF | 5.0×3.5 | 2.5 | 2.5 | P1 | S1 |
| **RDE5C2A5R0C0□□H03□** | C0G (EIA) | 100Vdc | 5.0pF±0.25pF | 4.0×3.5 | 2.5 | 5.0 | K1 | M1 |
| **RDE5C2A5R0C0□□H03□** | C0G (EIA) | 100Vdc | 5.0pF±0.25pF | 5.0×3.5 | 2.5 | 2.5 | P1 | S1 |
| **RDE5C2A6R0D0□□H03□** | C0G (EIA) | 100Vdc | 6.0pF±0.5pF | 4.0×3.5 | 2.5 | 5.0 | K1 | M1 |
| **RDE5C2A6R0D0□□H03□** | C0G (EIA) | 100Vdc | 6.0pF±0.5pF | 5.0×3.5 | 2.5 | 2.5 | P1 | S1 |
| **RDE5C2A7R0D0□□H03□** | C0G (EIA) | 100Vdc | 7.0pF±0.5pF | 4.0×3.5 | 2.5 | 5.0 | K1 | M1 |
| **RDE5C2A7R0D0□□H03□** | C0G (EIA) | 100Vdc | 7.0pF±0.5pF | 5.0×3.5 | 2.5 | 2.5 | P1 | S1 |
| **RDE5C2A8R0D0□□H03□** | C0G (EIA) | 100Vdc | 8.0pF±0.5pF | 4.0×3.5 | 2.5 | 5.0 | K1 | M1 |
| **RDE5C2A8R0D0□□H03□** | C0G (EIA) | 100Vdc | 8.0pF±0.5pF | 5.0×3.5 | 2.5 | 2.5 | P1 | S1 |
| **RDE5C2A9R0D0□□H03□** | C0G (EIA) | 100Vdc | 9.0pF±0.5pF | 4.0×3.5 | 2.5 | 5.0 | K1 | M1 |
| **RDE5C2A9R0D0□□H03□** | C0G (EIA) | 100Vdc | 9.0pF±0.5pF | 5.0×3.5 | 2.5 | 2.5 | P1 | S1 |
| **RDE5C2A100J0□□H03□** | C0G (EIA) | 100Vdc | 10pF±5% | 4.0×3.5 | 2.5 | 5.0 | K1 | M1 |
| **RDE5C2A100J0□□H03□** | C0G (EIA) | 100Vdc | 10pF±5% | 5.0×3.5 | 2.5 | 2.5 | P1 | S1 |
| **RDE5C2A120J0□□H03□** | C0G (EIA) | 100Vdc | 12pF±5% | 4.0×3.5 | 2.5 | 5.0 | K1 | M1 |
| **RDE5C2A120J0□□H03□** | C0G (EIA) | 100Vdc | 12pF±5% | 5.0×3.5 | 2.5 | 2.5 | P1 | S1 |
| **RDE5C2A150J0□□H03□** | C0G (EIA) | 100Vdc | 15pF±5% | 4.0×3.5 | 2.5 | 5.0 | K1 | M1 |
| **RDE5C2A150J0□□H03□** | C0G (EIA) | 100Vdc | 15pF±5% | 5.0×3.5 | 2.5 | 2.5 | P1 | S1 |
| **RDE5C2A180J0□□H03□** | C0G (EIA) | 100Vdc | 18pF±5% | 4.0×3.5 | 2.5 | 5.0 | K1 | M1 |
| **RDE5C2A180J0□□H03□** | C0G (EIA) | 100Vdc | 18pF±5% | 5.0×3.5 | 2.5 | 2.5 | P1 | S1 |
| **RDE5C2A220J0□□H03□** | C0G (EIA) | 100Vdc | 22pF±5% | 4.0×3.5 | 2.5 | 5.0 | K1 | M1 |
| **RDE5C2A220J0□□H03□** | C0G (EIA) | 100Vdc | 22pF±5% | 5.0×3.5 | 2.5 | 2.5 | P1 | S1 |

Continued on the following page.

Continued from the preceding page.

| Part Number | Temp. Char. | Rated Voltage | Capacitance | Dimensions LxW (mm) | Dimension T (mm) | Lead Space F (mm) | Lead Style Code Bulk | Lead Style Code Taping |
|---|---|---|---|---|---|---|---|---|
| **RDE5C2A270J0□□H03□** | C0G (EIA) | 100Vdc | 27pF±5% | 4.0×3.5 | 2.5 | 5.0 | K1 | M1 |
| **RDE5C2A270J0□□H03□** | C0G (EIA) | 100Vdc | 27pF±5% | 5.0×3.5 | 2.5 | 2.5 | P1 | S1 |
| **RDE5C2A330J0□□H03□** | C0G (EIA) | 100Vdc | 33pF±5% | 4.0×3.5 | 2.5 | 5.0 | K1 | M1 |
| **RDE5C2A330J0□□H03□** | C0G (EIA) | 100Vdc | 33pF±5% | 5.0×3.5 | 2.5 | 2.5 | P1 | S1 |
| **RDE5C2A390J0□□H03□** | C0G (EIA) | 100Vdc | 39pF±5% | 4.0×3.5 | 2.5 | 5.0 | K1 | M1 |
| **RDE5C2A390J0□□H03□** | C0G (EIA) | 100Vdc | 39pF±5% | 5.0×3.5 | 2.5 | 2.5 | P1 | S1 |
| **RDE5C2A470J0□□H03□** | C0G (EIA) | 100Vdc | 47pF±5% | 4.0×3.5 | 2.5 | 5.0 | K1 | M1 |
| **RDE5C2A470J0□□H03□** | C0G (EIA) | 100Vdc | 47pF±5% | 5.0×3.5 | 2.5 | 2.5 | P1 | S1 |
| **RDE5C2A560J0□□H03□** | C0G (EIA) | 100Vdc | 56pF±5% | 4.0×3.5 | 2.5 | 5.0 | K1 | M1 |
| **RDE5C2A560J0□□H03□** | C0G (EIA) | 100Vdc | 56pF±5% | 5.0×3.5 | 2.5 | 2.5 | P1 | S1 |
| **RDE5C2A680J0□□H03□** | C0G (EIA) | 100Vdc | 68pF±5% | 4.0×3.5 | 2.5 | 5.0 | K1 | M1 |
| **RDE5C2A680J0□□H03□** | C0G (EIA) | 100Vdc | 68pF±5% | 5.0×3.5 | 2.5 | 2.5 | P1 | S1 |
| **RDE5C2A820J0□□H03□** | C0G (EIA) | 100Vdc | 82pF±5% | 4.0×3.5 | 2.5 | 5.0 | K1 | M1 |
| **RDE5C2A820J0□□H03□** | C0G (EIA) | 100Vdc | 82pF±5% | 5.0×3.5 | 2.5 | 2.5 | P1 | S1 |
| **RDE5C2A101J0□□H03□** | C0G (EIA) | 100Vdc | 100pF±5% | 4.0×3.5 | 2.5 | 5.0 | K1 | M1 |
| **RDE5C2A101J0□□H03□** | C0G (EIA) | 100Vdc | 100pF±5% | 5.0×3.5 | 2.5 | 2.5 | P1 | S1 |
| **RDE5C2A121J0□□H03□** | C0G (EIA) | 100Vdc | 120pF±5% | 4.0×3.5 | 2.5 | 5.0 | K1 | M1 |
| **RDE5C2A121J0□□H03□** | C0G (EIA) | 100Vdc | 120pF±5% | 5.0×3.5 | 2.5 | 2.5 | P1 | S1 |
| **RDE5C2A151J0□□H03□** | C0G (EIA) | 100Vdc | 150pF±5% | 4.0×3.5 | 2.5 | 5.0 | K1 | M1 |
| **RDE5C2A151J0□□H03□** | C0G (EIA) | 100Vdc | 150pF±5% | 5.0×3.5 | 2.5 | 2.5 | P1 | S1 |
| **RDE5C2A181J0□□H03□** | C0G (EIA) | 100Vdc | 180pF±5% | 4.0×3.5 | 2.5 | 5.0 | K1 | M1 |
| **RDE5C2A181J0□□H03□** | C0G (EIA) | 100Vdc | 180pF±5% | 5.0×3.5 | 2.5 | 2.5 | P1 | S1 |
| **RDE5C2A221J0□□H03□** | C0G (EIA) | 100Vdc | 220pF±5% | 4.0×3.5 | 2.5 | 5.0 | K1 | M1 |
| **RDE5C2A221J0□□H03□** | C0G (EIA) | 100Vdc | 220pF±5% | 5.0×3.5 | 2.5 | 2.5 | P1 | S1 |
| **RDE5C2A271J0□□H03□** | C0G (EIA) | 100Vdc | 270pF±5% | 4.0×3.5 | 2.5 | 5.0 | K1 | M1 |
| **RDE5C2A271J0□□H03□** | C0G (EIA) | 100Vdc | 270pF±5% | 5.0×3.5 | 2.5 | 2.5 | P1 | S1 |
| **RDE5C2A331J0□□H03□** | C0G (EIA) | 100Vdc | 330pF±5% | 4.0×3.5 | 2.5 | 5.0 | K1 | M1 |
| **RDE5C2A331J0□□H03□** | C0G (EIA) | 100Vdc | 330pF±5% | 5.0×3.5 | 2.5 | 2.5 | P1 | S1 |
| **RDE5C2A391J0□□H03□** | C0G (EIA) | 100Vdc | 390pF±5% | 4.0×3.5 | 2.5 | 5.0 | K1 | M1 |
| **RDE5C2A391J0□□H03□** | C0G (EIA) | 100Vdc | 390pF±5% | 5.0×3.5 | 2.5 | 2.5 | P1 | S1 |
| **RDE5C2A471J0□□H03□** | C0G (EIA) | 100Vdc | 470pF±5% | 4.0×3.5 | 2.5 | 5.0 | K1 | M1 |
| **RDE5C2A471J0□□H03□** | C0G (EIA) | 100Vdc | 470pF±5% | 5.0×3.5 | 2.5 | 2.5 | P1 | S1 |
| **RDE5C2A561J0□□H03□** | C0G (EIA) | 100Vdc | 560pF±5% | 4.0×3.5 | 2.5 | 5.0 | K1 | M1 |
| **RDE5C2A561J0□□H03□** | C0G (EIA) | 100Vdc | 560pF±5% | 5.0×3.5 | 2.5 | 2.5 | P1 | S1 |
| **RDE5C2A681J0□□H03□** | C0G (EIA) | 100Vdc | 680pF±5% | 4.0×3.5 | 2.5 | 5.0 | K1 | M1 |
| **RDE5C2A681J0□□H03□** | C0G (EIA) | 100Vdc | 680pF±5% | 5.0×3.5 | 2.5 | 2.5 | P1 | S1 |
| **RDE5C2A821J0□□H03□** | C0G (EIA) | 100Vdc | 820pF±5% | 4.0×3.5 | 2.5 | 5.0 | K1 | M1 |
| **RDE5C2A821J0□□H03□** | C0G (EIA) | 100Vdc | 820pF±5% | 5.0×3.5 | 2.5 | 2.5 | P1 | S1 |
| **RDE5C2A102J0□□H03□** | C0G (EIA) | 100Vdc | 1000pF±5% | 4.0×3.5 | 2.5 | 5.0 | K1 | M1 |
| **RDE5C2A102J0□□H03□** | C0G (EIA) | 100Vdc | 1000pF±5% | 5.0×3.5 | 2.5 | 2.5 | P1 | S1 |
| **RDE5C2A122J0□□H03□** | C0G (EIA) | 100Vdc | 1200pF±5% | 4.0×3.5 | 2.5 | 5.0 | K1 | M1 |
| **RDE5C2A122J0□□H03□** | C0G (EIA) | 100Vdc | 1200pF±5% | 5.0×3.5 | 2.5 | 2.5 | P1 | S1 |
| **RDE5C2A152J0□□H03□** | C0G (EIA) | 100Vdc | 1500pF±5% | 4.0×3.5 | 2.5 | 5.0 | K1 | M1 |
| **RDE5C2A152J0□□H03□** | C0G (EIA) | 100Vdc | 1500pF±5% | 5.0×3.5 | 2.5 | 2.5 | P1 | S1 |
| **RDE5C2A182J1□□H03□** | C0G (EIA) | 100Vdc | 1800pF±5% | 4.5×3.5 | 3.15 | 5.0 | K1 | M1 |
| **RDE5C2A182J1□□H03□** | C0G (EIA) | 100Vdc | 1800pF±5% | 5.0×3.5 | 3.15 | 2.5 | P1 | S1 |
| **RDE5C2A222J1□□H03□** | C0G (EIA) | 100Vdc | 2200pF±5% | 4.5×3.5 | 3.15 | 5.0 | K1 | M1 |
| **RDE5C2A222J1□□H03□** | C0G (EIA) | 100Vdc | 2200pF±5% | 5.0×3.5 | 3.15 | 2.5 | P1 | S1 |
| **RDE5C2A272J1□□H03□** | C0G (EIA) | 100Vdc | 2700pF±5% | 4.5×3.5 | 3.15 | 5.0 | K1 | M1 |
| **RDE5C2A272J1□□H03□** | C0G (EIA) | 100Vdc | 2700pF±5% | 5.0×3.5 | 3.15 | 2.5 | P1 | S1 |
| **RDE5C2A332J1□□H03□** | C0G (EIA) | 100Vdc | 3300pF±5% | 4.5×3.5 | 3.15 | 5.0 | K1 | M1 |
| **RDE5C2A332J1□□H03□** | C0G (EIA) | 100Vdc | 3300pF±5% | 5.0×3.5 | 3.15 | 2.5 | P1 | S1 |
| **RDE7U2E101J1□□H03□** | U2J (EIA) | 250Vdc | 100pF±5% | 4.5×3.5 | 3.15 | 5.0 | K1 | M1 |
| **RDE7U2E151J1□□H03□** | U2J (EIA) | 250Vdc | 150pF±5% | 4.5×3.5 | 3.15 | 5.0 | K1 | M1 |
| **RDE7U2E221J1□□H03□** | U2J (EIA) | 250Vdc | 220pF±5% | 4.5×3.5 | 3.15 | 5.0 | K1 | M1 |
| **RDE7U2E331J1□□H03□** | U2J (EIA) | 250Vdc | 330pF±5% | 4.5×3.5 | 3.15 | 5.0 | K1 | M1 |
| **RDE7U2E471J1□□H03□** | U2J (EIA) | 250Vdc | 470pF±5% | 4.5×3.5 | 3.15 | 5.0 | K1 | M1 |

Continued on the following page.

Continued from the preceding page.

| Part Number | Temp. Char. | Rated Voltage | Capacitance | Dimensions LxW (mm) | Dimension T (mm) | Lead Space F (mm) | Lead Style Code Bulk | Lead Style Code Taping |
|---|---|---|---|---|---|---|---|---|
| **RDE7U2E681J1□□H03□** | U2J (EIA) | 250Vdc | 680pF±5% | 4.5×3.5 | 3.15 | 5.0 | K1 | M1 |
| **RDE7U2E102J1□□H03□** | U2J (EIA) | 250Vdc | 1000pF±5% | 4.5×3.5 | 3.15 | 5.0 | K1 | M1 |
| **RDE7U2E152J1□□H03□** | U2J (EIA) | 250Vdc | 1500pF±5% | 4.5×3.5 | 3.15 | 5.0 | K1 | M1 |
| **RDE7U2E222J1□□H03□** | U2J (EIA) | 250Vdc | 2200pF±5% | 4.5×3.5 | 3.15 | 5.0 | K1 | M1 |
| **RDE7U2E332J1□□H03□** | U2J (EIA) | 250Vdc | 3300pF±5% | 4.5×3.5 | 3.15 | 5.0 | K1 | M1 |
| **RDE7U2E472J1□□H03□** | U2J (EIA) | 250Vdc | 4700pF±5% | 4.5×3.5 | 3.15 | 5.0 | K1 | M1 |
| **RDE7U2E682J2□□H03□** | U2J (EIA) | 250Vdc | 6800pF±5% | 5.5×4.0 | 3.15 | 5.0 | K1 | M1 |
| **RDE7U2E103J2□□H03□** | U2J (EIA) | 250Vdc | 10000pF±5% | 5.5×4.0 | 3.15 | 5.0 | K1 | M1 |
| **RDE7U2E153J2□□H03□** | U2J (EIA) | 250Vdc | 15000pF±5% | 5.5×4.0 | 3.15 | 5.0 | K1 | M1 |
| **RDE7U2E223J2□□H03□** | U2J (EIA) | 250Vdc | 22000pF±5% | 5.5×4.0 | 3.15 | 5.0 | K1 | M1 |
| **RDE7U2E333J3□□H03□** | U2J (EIA) | 250Vdc | 33000pF±5% | 5.5×5.0 | 4.0 | 5.0 | K1 | M1 |
| **RDE7U2E473J3□□H03□** | U2J (EIA) | 250Vdc | 47000pF±5% | 5.5×5.0 | 4.0 | 5.0 | K1 | M1 |
| **RDE7U2J100J2□□H03□** | U2J (EIA) | 630Vdc | 10pF±5% | 5.5×4.0 | 3.15 | 5.0 | K1 | M1 |
| **RDE7U2J150J2□□H03□** | U2J (EIA) | 630Vdc | 15pF±5% | 5.5×4.0 | 3.15 | 5.0 | K1 | M1 |
| **RDE7U2J220J2□□H03□** | U2J (EIA) | 630Vdc | 22pF±5% | 5.5×4.0 | 3.15 | 5.0 | K1 | M1 |
| **RDE7U2J330J2□□H03□** | U2J (EIA) | 630Vdc | 33pF±5% | 5.5×4.0 | 3.15 | 5.0 | K1 | M1 |
| **RDE7U2J470J2□□H03□** | U2J (EIA) | 630Vdc | 47pF±5% | 5.5×4.0 | 3.15 | 5.0 | K1 | M1 |
| **RDE7U2J680J2□□H03□** | U2J (EIA) | 630Vdc | 68pF±5% | 5.5×4.0 | 3.15 | 5.0 | K1 | M1 |
| **RDE7U2J101J2□□H03□** | U2J (EIA) | 630Vdc | 100pF±5% | 5.5×4.0 | 3.15 | 5.0 | K1 | M1 |
| **RDE7U2J151J2□□H03□** | U2J (EIA) | 630Vdc | 150pF±5% | 5.5×4.0 | 3.15 | 5.0 | K1 | M1 |
| **RDE7U2J221J2□□H03□** | U2J (EIA) | 630Vdc | 220pF±5% | 5.5×4.0 | 3.15 | 5.0 | K1 | M1 |
| **RDE7U2J331J2□□H03□** | U2J (EIA) | 630Vdc | 330pF±5% | 5.5×4.0 | 3.15 | 5.0 | K1 | M1 |
| **RDE7U2J471J2□□H03□** | U2J (EIA) | 630Vdc | 470pF±5% | 5.5×4.0 | 3.15 | 5.0 | K1 | M1 |
| **RDE7U2J681J2□□H03□** | U2J (EIA) | 630Vdc | 680pF±5% | 5.5×4.0 | 3.15 | 5.0 | K1 | M1 |
| **RDE7U2J102J2□□H03□** | U2J (EIA) | 630Vdc | 1000pF±5% | 5.5×4.0 | 3.15 | 5.0 | K1 | M1 |
| **RDE7U2J152J2□□H03□** | U2J (EIA) | 630Vdc | 1500pF±5% | 5.5×4.0 | 3.15 | 5.0 | K1 | M1 |
| **RDE7U2J222J2□□H03□** | U2J (EIA) | 630Vdc | 2200pF±5% | 5.5×4.0 | 3.15 | 5.0 | K1 | M1 |
| **RDE7U2J332J2□□H03□** | U2J (EIA) | 630Vdc | 3300pF±5% | 5.5×4.0 | 3.15 | 5.0 | K1 | M1 |
| **RDE7U2J472J2□□H03□** | U2J (EIA) | 630Vdc | 4700pF±5% | 5.5×4.0 | 3.15 | 5.0 | K1 | M1 |
| **RDE7U2J682J3□□H03□** | U2J (EIA) | 630Vdc | 6800pF±5% | 5.5×5.0 | 4.0 | 5.0 | K1 | M1 |
| **RDE7U2J103J3□□H03□** | U2J (EIA) | 630Vdc | 10000pF±5% | 5.5×5.0 | 4.0 | 5.0 | K1 | M1 |
| **RDE7U2J153J4□□H03□** | U2J (EIA) | 630Vdc | 15000pF±5% | 7.5×5.5 | 4.0 | 5.0 | K1 | M1 |
| **RDE7U2J223J4□□H03□** | U2J (EIA) | 630Vdc | 22000pF±5% | 7.5×5.5 | 4.0 | 5.0 | K1 | M1 |
| **RDE7U2J333J5□□H03□** | U2J (EIA) | 630Vdc | 33000pF±5% | 7.5×8.0 | 4.0 | 5.0 | B1 | E1 |
| **RDE7U2J473J5□□H03□** | U2J (EIA) | 630Vdc | 47000pF±5% | 7.5×8.0 | 4.0 | 5.0 | B1 | E1 |
| **RDE7U2J943JU□□H03□** | U2J (EIA) | 630Vdc | 94000pF±5% | 7.7×13.0 | 4.0 | 5.0 | B1 | E1 |
| **RDE7U3A100J2□□H03□** | U2J (EIA) | 1000Vdc | 10pF±5% | 5.5×4.0 | 3.15 | 5.0 | K1 | M1 |
| **RDE7U3A150J2□□H03□** | U2J (EIA) | 1000Vdc | 15pF±5% | 5.5×4.0 | 3.15 | 5.0 | K1 | M1 |
| **RDE7U3A220J2□□H03□** | U2J (EIA) | 1000Vdc | 22pF±5% | 5.5×4.0 | 3.15 | 5.0 | K1 | M1 |
| **RDE7U3A330J2□□H03□** | U2J (EIA) | 1000Vdc | 33pF±5% | 5.5×4.0 | 3.15 | 5.0 | K1 | M1 |
| **RDE7U3A470J2□□H03□** | U2J (EIA) | 1000Vdc | 47pF±5% | 5.5×4.0 | 3.15 | 5.0 | K1 | M1 |
| **RDE7U3A680J2□□H03□** | U2J (EIA) | 1000Vdc | 68pF±5% | 5.5×4.0 | 3.15 | 5.0 | K1 | M1 |
| **RDE7U3A101J2□□H03□** | U2J (EIA) | 1000Vdc | 100pF±5% | 5.5×4.0 | 3.15 | 5.0 | K1 | M1 |
| **RDE7U3A151J2□□H03□** | U2J (EIA) | 1000Vdc | 150pF±5% | 5.5×4.0 | 3.15 | 5.0 | K1 | M1 |
| **RDE7U3A221J2□□H03□** | U2J (EIA) | 1000Vdc | 220pF±5% | 5.5×4.0 | 3.15 | 5.0 | K1 | M1 |
| **RDE7U3A331J2□□H03□** | U2J (EIA) | 1000Vdc | 330pF±5% | 5.5×4.0 | 3.15 | 5.0 | K1 | M1 |
| **RDE7U3A471J2□□H03□** | U2J (EIA) | 1000Vdc | 470pF±5% | 5.5×4.0 | 3.15 | 5.0 | K1 | M1 |
| **RDE7U3A681J2□□H03□** | U2J (EIA) | 1000Vdc | 680pF±5% | 5.5×4.0 | 3.15 | 5.0 | K1 | M1 |
| **RDE7U3A102J2□□H03□** | U2J (EIA) | 1000Vdc | 1000pF±5% | 5.5×4.0 | 3.15 | 5.0 | K1 | M1 |
| **RDE7U3A152J3□□H03□** | U2J (EIA) | 1000Vdc | 1500pF±5% | 5.5×5.0 | 4.0 | 5.0 | K1 | M1 |
| **RDE7U3A222J3□□H03□** | U2J (EIA) | 1000Vdc | 2200pF±5% | 5.5×5.0 | 4.0 | 5.0 | K1 | M1 |
| **RDE7U3A332J4□□H03□** | U2J (EIA) | 1000Vdc | 3300pF±5% | 7.5×5.5 | 4.0 | 5.0 | K1 | M1 |
| **RDE7U3A472J4□□H03□** | U2J (EIA) | 1000Vdc | 4700pF±5% | 7.5×5.5 | 4.0 | 5.0 | K1 | M1 |
| **RDE7U3A682J5□□H03□** | U2J (EIA) | 1000Vdc | 6800pF±5% | 7.5×8.0 | 4.0 | 5.0 | B1 | E1 |
| **RDE7U3A103J5□□H03□** | U2J (EIA) | 1000Vdc | 10000pF±5% | 7.5×8.0 | 4.0 | 5.0 | B1 | E1 |
| **RDE7U3A203JU□□H03□** | U2J (EIA) | 1000Vdc | 20000pF±5% | 7.7×13.0 | 4.0 | 5.0 | B1 | E1 |

Two blank columns are filled with the lead style code. Please refer to the 3 columns on the right for the appropriate code.
The last blank column is filled with the packaging code. (B: bulk, A: ammo pack)

# High Dielectric Constant Type, X7R/X7S Characteristics

| Part Number | Temp. Char. | Rated Voltage | Capacitance | Dimensions LxW (mm) | Dimension T (mm) | Lead Space F (mm) | Lead Style Code Bulk | Lead Style Code Taping |
|---|---|---|---|---|---|---|---|---|
| RDER71E104K0□□H03□ | X7R (EIA) | 25Vdc | 0.1μF±10% | 4.0×3.5 | 2.5 | 5.0 | K1 | M1 |
| RDER71E104K0□□H03□ | X7R (EIA) | 25Vdc | 0.1μF±10% | 5.0×3.5 | 2.5 | 2.5 | P1 | S1 |
| RDEC71E224K0□□H03□ | X7S (EIA) | 25Vdc | 0.22μF±10% | 4.0×3.5 | 2.5 | 5.0 | K1 | M1 |
| RDEC71E224K0□□H03□ | X7S (EIA) | 25Vdc | 0.22μF±10% | 5.0×3.5 | 2.5 | 2.5 | P1 | S1 |
| RDEC71E474K0□□H03□ | X7S (EIA) | 25Vdc | 0.47μF±10% | 4.0×3.5 | 2.5 | 5.0 | K1 | M1 |
| RDEC71E474K0□□H03□ | X7S (EIA) | 25Vdc | 0.47μF±10% | 5.0×3.5 | 2.5 | 2.5 | P1 | S1 |
| RDEC71E105K0□□H03□ | X7S (EIA) | 25Vdc | 1.0μF±10% | 4.0×3.5 | 2.5 | 5.0 | K1 | M1 |
| RDEC71E105K0□□H03□ | X7S (EIA) | 25Vdc | 1.0μF±10% | 5.0×3.5 | 2.5 | 2.5 | P1 | S1 |
| RDEC71E225K1□□H03□ | X7S (EIA) | 25Vdc | 2.2μF±10% | 4.5×3.5 | 3.15 | 5.0 | K1 | M1 |
| RDEC71E225K1□□H03□ | X7S (EIA) | 25Vdc | 2.2μF±10% | 5.0×3.5 | 3.15 | 2.5 | P1 | S1 |
| RDEC71E475K2□□H03□ | X7S (EIA) | 25Vdc | 4.7μF±10% | 5.5×4.0 | 3.15 | 2.5 | P1 | S1 |
| RDEC71E475K2□□H03□ | X7S (EIA) | 25Vdc | 4.7μF±10% | 5.5×4.0 | 3.15 | 5.0 | K1 | M1 |
| RDEC71E106K2□□H03□ | X7S (EIA) | 25Vdc | 10μF±10% | 5.5×4.0 | 3.15 | 2.5 | P1 | S1 |
| RDEC71E106K2□□H03□ | X7S (EIA) | 25Vdc | 10μF±10% | 5.5×4.0 | 3.15 | 5.0 | K1 | M1 |
| RDEC71E226K3□□H03□ | X7S (EIA) | 25Vdc | 22μF±10% | 5.5×5.0 | 4.0 | 2.5 | P1 | S1 |
| RDEC71E226K3□□H03□ | X7S (EIA) | 25Vdc | 22μF±10% | 5.5×5.0 | 4.0 | 5.0 | K1 | M1 |
| RDEC71E476MW□□H03□ | X7S (EIA) | 25Vdc | 47μF±20% | 5.5×7.5 | 4.0 | 5.0 | K1 | M1 |
| RDER71H221K0□□H03□ | X7R (EIA) | 50Vdc | 220pF±10% | 4.0×3.5 | 2.5 | 5.0 | K1 | M1 |
| RDER71H221K0□□H03□ | X7R (EIA) | 50Vdc | 220pF±10% | 5.0×3.5 | 2.5 | 2.5 | P1 | S1 |
| RDER71H331K0□□H03□ | X7R (EIA) | 50Vdc | 330pF±10% | 4.0×3.5 | 2.5 | 5.0 | K1 | M1 |
| RDER71H331K0□□H03□ | X7R (EIA) | 50Vdc | 330pF±10% | 5.0×3.5 | 2.5 | 2.5 | P1 | S1 |
| RDER71H471K0□□H03□ | X7R (EIA) | 50Vdc | 470pF±10% | 4.0×3.5 | 2.5 | 5.0 | K1 | M1 |
| RDER71H471K0□□H03□ | X7R (EIA) | 50Vdc | 470pF±10% | 5.0×3.5 | 2.5 | 2.5 | P1 | S1 |
| RDER71H681K0□□H03□ | X7R (EIA) | 50Vdc | 680pF±10% | 4.0×3.5 | 2.5 | 5.0 | K1 | M1 |
| RDER71H681K0□□H03□ | X7R (EIA) | 50Vdc | 680pF±10% | 5.0×3.5 | 2.5 | 2.5 | P1 | S1 |
| RDER71H102K0□□H03□ | X7R (EIA) | 50Vdc | 1000pF±10% | 4.0×3.5 | 2.5 | 5.0 | K1 | M1 |
| RDER71H102K0□□H03□ | X7R (EIA) | 50Vdc | 1000pF±10% | 5.0×3.5 | 2.5 | 2.5 | P1 | S1 |
| RDER71H152K0□□H03□ | X7R (EIA) | 50Vdc | 1500pF±10% | 4.0×3.5 | 2.5 | 5.0 | K1 | M1 |
| RDER71H152K0□□H03□ | X7R (EIA) | 50Vdc | 1500pF±10% | 5.0×3.5 | 2.5 | 2.5 | P1 | S1 |
| RDER71H222K0□□H03□ | X7R (EIA) | 50Vdc | 2200pF±10% | 4.0×3.5 | 2.5 | 5.0 | K1 | M1 |
| RDER71H222K0□□H03□ | X7R (EIA) | 50Vdc | 2200pF±10% | 5.0×3.5 | 2.5 | 2.5 | P1 | S1 |
| RDER71H332K0□□H03□ | X7R (EIA) | 50Vdc | 3300pF±10% | 4.0×3.5 | 2.5 | 5.0 | K1 | M1 |
| RDER71H332K0□□H03□ | X7R (EIA) | 50Vdc | 3300pF±10% | 5.0×3.5 | 2.5 | 2.5 | P1 | S1 |
| RDER71H472K0□□H03□ | X7R (EIA) | 50Vdc | 4700pF±10% | 4.0×3.5 | 2.5 | 5.0 | K1 | M1 |
| RDER71H472K0□□H03□ | X7R (EIA) | 50Vdc | 4700pF±10% | 5.0×3.5 | 2.5 | 2.5 | P1 | S1 |
| RDER71H682K0□□H03□ | X7R (EIA) | 50Vdc | 6800pF±10% | 4.0×3.5 | 2.5 | 5.0 | K1 | M1 |
| RDER71H682K0□□H03□ | X7R (EIA) | 50Vdc | 6800pF±10% | 5.0×3.5 | 2.5 | 2.5 | P1 | S1 |
| RDER71H103K0□□H03□ | X7R (EIA) | 50Vdc | 10000pF±10% | 4.0×3.5 | 2.5 | 5.0 | K1 | M1 |
| RDER71H103K0□□H03□ | X7R (EIA) | 50Vdc | 10000pF±10% | 5.0×3.5 | 2.5 | 2.5 | P1 | S1 |
| RDER71H153K0□□H03□ | X7R (EIA) | 50Vdc | 15000pF±10% | 4.0×3.5 | 2.5 | 5.0 | K1 | M1 |
| RDER71H153K0□□H03□ | X7R (EIA) | 50Vdc | 15000pF±10% | 5.0×3.5 | 2.5 | 2.5 | P1 | S1 |
| RDER71H223K0□□H03□ | X7R (EIA) | 50Vdc | 22000pF±10% | 4.0×3.5 | 2.5 | 5.0 | K1 | M1 |
| RDER71H223K0□□H03□ | X7R (EIA) | 50Vdc | 22000pF±10% | 5.0×3.5 | 2.5 | 2.5 | P1 | S1 |
| RDER71H333K0□□H03□ | X7R (EIA) | 50Vdc | 33000pF±10% | 4.0×3.5 | 2.5 | 5.0 | K1 | M1 |
| RDER71H333K0□□H03□ | X7R (EIA) | 50Vdc | 33000pF±10% | 5.0×3.5 | 2.5 | 2.5 | P1 | S1 |
| RDER71H473K0□□H03□ | X7R (EIA) | 50Vdc | 47000pF±10% | 4.0×3.5 | 2.5 | 5.0 | K1 | M1 |
| RDER71H473K0□□H03□ | X7R (EIA) | 50Vdc | 47000pF±10% | 5.0×3.5 | 2.5 | 2.5 | P1 | S1 |
| RDER71H683K0□□H03□ | X7R (EIA) | 50Vdc | 68000pF±10% | 4.0×3.5 | 2.5 | 5.0 | K1 | M1 |
| RDER71H683K0□□H03□ | X7R (EIA) | 50Vdc | 68000pF±10% | 5.0×3.5 | 2.5 | 2.5 | P1 | S1 |
| RDER71H104K0□□H03□ | X7R (EIA) | 50Vdc | 0.1μF±10% | 4.0×3.5 | 2.5 | 5.0 | K1 | M1 |
| RDER71H104K0□□H03□ | X7R (EIA) | 50Vdc | 0.1μF±10% | 5.0×3.5 | 2.5 | 2.5 | P1 | S1 |
| RDER71H154K1□□H03□ | X7R (EIA) | 50Vdc | 0.15μF±10% | 4.5×3.5 | 3.15 | 5.0 | K1 | M1 |
| RDER71H154K1□□H03□ | X7R (EIA) | 50Vdc | 0.15μF±10% | 5.0×3.5 | 3.15 | 2.5 | P1 | S1 |
| RDER71H224K1□□H03□ | X7R (EIA) | 50Vdc | 0.22μF±10% | 4.5×3.5 | 3.15 | 5.0 | K1 | M1 |
| RDER71H224K1□□H03□ | X7R (EIA) | 50Vdc | 0.22μF±10% | 5.0×3.5 | 3.15 | 2.5 | P1 | S1 |

Continued on the following page.

Continued from the preceding page.

| Part Number | Temp. Char. | Rated Voltage | Capacitance | Dimensions LxW (mm) | Dimension T (mm) | Lead Space F (mm) | Lead Style Code Bulk | Lead Style Code Taping |
|---|---|---|---|---|---|---|---|---|
| **RDER71H334K1□□H03□** | X7R (EIA) | 50Vdc | 0.33μF±10% | 4.5×3.5 | 3.15 | 5.0 | K1 | M1 |
| **RDER71H334K1□□H03□** | X7R (EIA) | 50Vdc | 0.33μF±10% | 5.0×3.5 | 3.15 | 2.5 | P1 | S1 |
| **RDER71H474K1□□H03□** | X7R (EIA) | 50Vdc | 0.47μF±10% | 4.5×3.5 | 3.15 | 5.0 | K1 | M1 |
| **RDER71H474K1□□H03□** | X7R (EIA) | 50Vdc | 0.47μF±10% | 5.0×3.5 | 3.15 | 2.5 | P1 | S1 |
| **RDER71H684K2□□H03□** | X7R (EIA) | 50Vdc | 0.68μF±10% | 5.5×4.0 | 3.15 | 2.5 | P1 | S1 |
| **RDER71H684K2□□H03□** | X7R (EIA) | 50Vdc | 0.68μF±10% | 5.5×4.0 | 3.15 | 5.0 | K1 | M1 |
| **RDER71H105K2□□H03□** | X7R (EIA) | 50Vdc | 1.0μF±10% | 5.5×4.0 | 3.15 | 2.5 | P1 | S1 |
| **RDER71H105K2□□H03□** | X7R (EIA) | 50Vdc | 1.0μF±10% | 5.5×4.0 | 3.15 | 5.0 | K1 | M1 |
| **RDER71H155K2□□H03□** | X7R (EIA) | 50Vdc | 1.5μF±10% | 5.5×4.0 | 3.15 | 2.5 | P1 | S1 |
| **RDER71H155K2□□H03□** | X7R (EIA) | 50Vdc | 1.5μF±10% | 5.5×4.0 | 3.15 | 5.0 | K1 | M1 |
| **RDER71H225K2□□H03□** | X7R (EIA) | 50Vdc | 2.2μF±10% | 5.5×4.0 | 3.15 | 2.5 | P1 | S1 |
| **RDER71H225K2□□H03□** | X7R (EIA) | 50Vdc | 2.2μF±10% | 5.5×4.0 | 3.15 | 5.0 | K1 | M1 |
| **RDER71H335K3□□H03□** | X7R (EIA) | 50Vdc | 3.3μF±10% | 5.5×5.0 | 4.0 | 2.5 | P1 | S1 |
| **RDER71H335K3□□H03□** | X7R (EIA) | 50Vdc | 3.3μF±10% | 5.5×5.0 | 4.0 | 5.0 | K1 | M1 |
| **RDEC71H475K2□□H03□** | X7S (EIA) | 50Vdc | 4.7μF±10% | 5.5×4.0 | 3.15 | 2.5 | P1 | S1 |
| **RDEC71H475K2□□H03□** | X7S (EIA) | 50Vdc | 4.7μF±10% | 5.5×4.0 | 3.15 | 5.0 | K1 | M1 |
| **RDEC71H106K3□□H03□** | X7S (EIA) | 50Vdc | 10μF±10% | 5.5×5.0 | 4.0 | 2.5 | P1 | S1 |
| **RDEC71H106K3□□H03□** | X7S (EIA) | 50Vdc | 10μF±10% | 5.5×5.0 | 4.0 | 5.0 | K1 | M1 |
| **RDEC71H226MW□□H03□** | X7S (EIA) | 50Vdc | 22μF±20% | 5.5×7.5 | 4.0 | 5.0 | K1 | M1 |
| **RDER72A221K0□□H03□** | X7R (EIA) | 100Vdc | 220pF±10% | 4.0×3.5 | 2.5 | 5.0 | K1 | M1 |
| **RDER72A221K0□□H03□** | X7R (EIA) | 100Vdc | 220pF±10% | 5.0×3.5 | 2.5 | 2.5 | P1 | S1 |
| **RDER72A331K0□□H03□** | X7R (EIA) | 100Vdc | 330pF±10% | 4.0×3.5 | 2.5 | 5.0 | K1 | M1 |
| **RDER72A331K0□□H03□** | X7R (EIA) | 100Vdc | 330pF±10% | 5.0×3.5 | 2.5 | 2.5 | P1 | S1 |
| **RDER72A471K0□□H03□** | X7R (EIA) | 100Vdc | 470pF±10% | 4.0×3.5 | 2.5 | 5.0 | K1 | M1 |
| **RDER72A471K0□□H03□** | X7R (EIA) | 100Vdc | 470pF±10% | 5.0×3.5 | 2.5 | 2.5 | P1 | S1 |
| **RDER72A681K0□□H03□** | X7R (EIA) | 100Vdc | 680pF±10% | 4.0×3.5 | 2.5 | 5.0 | K1 | M1 |
| **RDER72A681K0□□H03□** | X7R (EIA) | 100Vdc | 680pF±10% | 5.0×3.5 | 2.5 | 2.5 | P1 | S1 |
| **RDER72A102K0□□H03□** | X7R (EIA) | 100Vdc | 1000pF±10% | 4.0×3.5 | 2.5 | 5.0 | K1 | M1 |
| **RDER72A102K0□□H03□** | X7R (EIA) | 100Vdc | 1000pF±10% | 5.0×3.5 | 2.5 | 2.5 | P1 | S1 |
| **RDER72A152K0□□H03□** | X7R (EIA) | 100Vdc | 1500pF±10% | 4.0×3.5 | 2.5 | 5.0 | K1 | M1 |
| **RDER72A152K0□□H03□** | X7R (EIA) | 100Vdc | 1500pF±10% | 5.0×3.5 | 2.5 | 2.5 | P1 | S1 |
| **RDER72A222K0□□H03□** | X7R (EIA) | 100Vdc | 2200pF±10% | 4.0×3.5 | 2.5 | 5.0 | K1 | M1 |
| **RDER72A222K0□□H03□** | X7R (EIA) | 100Vdc | 2200pF±10% | 5.0×3.5 | 2.5 | 2.5 | P1 | S1 |
| **RDER72A332K0□□H03□** | X7R (EIA) | 100Vdc | 3300pF±10% | 4.0×3.5 | 2.5 | 5.0 | K1 | M1 |
| **RDER72A332K0□□H03□** | X7R (EIA) | 100Vdc | 3300pF±10% | 5.0×3.5 | 2.5 | 2.5 | P1 | S1 |
| **RDER72A472K0□□H03□** | X7R (EIA) | 100Vdc | 4700pF±10% | 4.0×3.5 | 2.5 | 5.0 | K1 | M1 |
| **RDER72A472K0□□H03□** | X7R (EIA) | 100Vdc | 4700pF±10% | 5.0×3.5 | 2.5 | 2.5 | P1 | S1 |
| **RDER72A682K0□□H03□** | X7R (EIA) | 100Vdc | 6800pF±10% | 4.0×3.5 | 2.5 | 5.0 | K1 | M1 |
| **RDER72A682K0□□H03□** | X7R (EIA) | 100Vdc | 6800pF±10% | 5.0×3.5 | 2.5 | 2.5 | P1 | S1 |
| **RDER72A103K0□□H03□** | X7R (EIA) | 100Vdc | 10000pF±10% | 4.0×3.5 | 2.5 | 5.0 | K1 | M1 |
| **RDER72A103K0□□H03□** | X7R (EIA) | 100Vdc | 10000pF±10% | 5.0×3.5 | 2.5 | 2.5 | P1 | S1 |
| **RDER72A153K0□□H03□** | X7R (EIA) | 100Vdc | 15000pF±10% | 4.0×3.5 | 2.5 | 5.0 | K1 | M1 |
| **RDER72A153K0□□H03□** | X7R (EIA) | 100Vdc | 15000pF±10% | 5.0×3.5 | 2.5 | 2.5 | P1 | S1 |
| **RDER72A223K0□□H03□** | X7R (EIA) | 100Vdc | 22000pF±10% | 4.0×3.5 | 2.5 | 5.0 | K1 | M1 |
| **RDER72A223K0□□H03□** | X7R (EIA) | 100Vdc | 22000pF±10% | 5.0×3.5 | 2.5 | 2.5 | P1 | S1 |
| **RDER72A333K1□□H03□** | X7R (EIA) | 100Vdc | 33000pF±10% | 4.5×3.5 | 3.15 | 5.0 | K1 | M1 |
| **RDER72A333K1□□H03□** | X7R (EIA) | 100Vdc | 33000pF±10% | 5.0×3.5 | 3.15 | 2.5 | P1 | S1 |
| **RDER72A473K1□□H03□** | X7R (EIA) | 100Vdc | 47000pF±10% | 4.5×3.5 | 3.15 | 5.0 | K1 | M1 |
| **RDER72A473K1□□H03□** | X7R (EIA) | 100Vdc | 47000pF±10% | 5.0×3.5 | 3.15 | 2.5 | P1 | S1 |
| **RDER72A683K1□□H03□** | X7R (EIA) | 100Vdc | 68000pF±10% | 4.5×3.5 | 3.15 | 5.0 | K1 | M1 |
| **RDER72A683K1□□H03□** | X7R (EIA) | 100Vdc | 68000pF±10% | 5.0×3.5 | 3.15 | 2.5 | P1 | S1 |
| **RDER72A104K1□□H03□** | X7R (EIA) | 100Vdc | 0.1μF±10% | 4.5×3.5 | 3.15 | 5.0 | K1 | M1 |
| **RDER72A104K1□□H03□** | X7R (EIA) | 100Vdc | 0.1μF±10% | 5.0×3.5 | 3.15 | 2.5 | P1 | S1 |
| **RDER72A154K2□□H03□** | X7R (EIA) | 100Vdc | 0.15μF±10% | 5.5×4.0 | 3.15 | 2.5 | P1 | S1 |
| **RDER72A154K2□□H03□** | X7R (EIA) | 100Vdc | 0.15μF±10% | 5.5×4.0 | 3.15 | 5.0 | K1 | M1 |
| **RDER72A224K1□□H03□** | X7R (EIA) | 100Vdc | 0.22μF±10% | 4.5×3.5 | 3.15 | 5.0 | K1 | M1 |
| **RDER72A224K1□□H03□** | X7R (EIA) | 100Vdc | 0.22μF±10% | 5.0×3.5 | 3.15 | 2.5 | P1 | S1 |

Continued on the following page.

Continued from the preceding page.

| Part Number | Temp. Char. | Rated Voltage | Capacitance | Dimensions LxW (mm) | Dimension T (mm) | Lead Space F (mm) | Lead Style Code Bulk | Lead Style Code Taping |
|---|---|---|---|---|---|---|---|---|
| **RDER72A334K1□□H03□** | X7R (EIA) | 100Vdc | 0.33μF±10% | 4.5×3.5 | 3.15 | 5.0 | K1 | M1 |
| **RDER72A334K1□□H03□** | X7R (EIA) | 100Vdc | 0.33μF±10% | 5.0×3.5 | 3.15 | 2.5 | P1 | S1 |
| **RDER72A474K1□□H03□** | X7R (EIA) | 100Vdc | 0.47μF±10% | 4.5×3.5 | 3.15 | 5.0 | K1 | M1 |
| **RDER72A474K1□□H03□** | X7R (EIA) | 100Vdc | 0.47μF±10% | 5.0×3.5 | 3.15 | 2.5 | P1 | S1 |
| **RDER72A684K2□□H03□** | X7R (EIA) | 100Vdc | 0.68μF±10% | 5.5×4.0 | 3.15 | 2.5 | P1 | S1 |
| **RDER72A684K2□□H03□** | X7R (EIA) | 100Vdc | 0.68μF±10% | 5.5×4.0 | 3.15 | 5.0 | K1 | M1 |
| **RDER72A105K2□□H03□** | X7R (EIA) | 100Vdc | 1.0μF±10% | 5.5×4.0 | 3.15 | 2.5 | P1 | S1 |
| **RDER72A105K2□□H03□** | X7R (EIA) | 100Vdc | 1.0μF±10% | 5.5×4.0 | 3.15 | 5.0 | K1 | M1 |
| **RDEC72A155K3□□H03□** | X7S (EIA) | 100Vdc | 1.5μF±10% | 5.5×5.0 | 4.0 | 2.5 | P1 | S1 |
| **RDEC72A155K3□□H03□** | X7S (EIA) | 100Vdc | 1.5μF±10% | 5.5×5.0 | 4.0 | 5.0 | K1 | M1 |
| **RDEC72A225K3□□H03□** | X7S (EIA) | 100Vdc | 2.2μF±10% | 5.5×5.0 | 4.0 | 2.5 | P1 | S1 |
| **RDEC72A225K3□□H03□** | X7S (EIA) | 100Vdc | 2.2μF±10% | 5.5×5.0 | 4.0 | 5.0 | K1 | M1 |
| **RDEC72A475MW□□H03□** | X7S (EIA) | 100Vdc | 4.7μF±20% | 5.5×7.5 | 4.0 | 5.0 | K1 | M1 |
| **RDER72E102K1□□H03□** | X7R (EIA) | 250Vdc | 1000pF±10% | 4.5×3.5 | 3.15 | 5.0 | K1 | M1 |
| **RDER72E152K1□□H03□** | X7R (EIA) | 250Vdc | 1500pF±10% | 4.5×3.5 | 3.15 | 5.0 | K1 | M1 |
| **RDER72E222K1□□H03□** | X7R (EIA) | 250Vdc | 2200pF±10% | 4.5×3.5 | 3.15 | 5.0 | K1 | M1 |
| **RDER72E332K1□□H03□** | X7R (EIA) | 250Vdc | 3300pF±10% | 4.5×3.5 | 3.15 | 5.0 | K1 | M1 |
| **RDER72E472K1□□H03□** | X7R (EIA) | 250Vdc | 4700pF±10% | 4.5×3.5 | 3.15 | 5.0 | K1 | M1 |
| **RDER72E682K1□□H03□** | X7R (EIA) | 250Vdc | 6800pF±10% | 4.5×3.5 | 3.15 | 5.0 | K1 | M1 |
| **RDER72E103K1□□H03□** | X7R (EIA) | 250Vdc | 10000pF±10% | 4.5×3.5 | 3.15 | 5.0 | K1 | M1 |
| **RDER72E153K1□□H03□** | X7R (EIA) | 250Vdc | 15000pF±10% | 4.5×3.5 | 3.15 | 5.0 | K1 | M1 |
| **RDER72E223K1□□H03□** | X7R (EIA) | 250Vdc | 22000pF±10% | 4.5×3.5 | 3.15 | 5.0 | K1 | M1 |
| **RDER72E333K2□□H03□** | X7R (EIA) | 250Vdc | 33000pF±10% | 5.5×4.0 | 3.15 | 5.0 | K1 | M1 |
| **RDER72E473K2□□H03□** | X7R (EIA) | 250Vdc | 47000pF±10% | 5.5×4.0 | 3.15 | 5.0 | K1 | M1 |
| **RDER72E683K2□□H03□** | X7R (EIA) | 250Vdc | 68000pF±10% | 5.5×4.0 | 3.15 | 5.0 | K1 | M1 |
| **RDER72E104K2□□H03□** | X7R (EIA) | 250Vdc | 0.10μF±10% | 5.5×4.0 | 3.15 | 5.0 | K1 | M1 |
| **RDER72E154K3□□H03□** | X7R (EIA) | 250Vdc | 0.15μF±10% | 5.5×5.0 | 3.15 | 5.0 | K1 | M1 |
| **RDER72E224K3□□H03□** | X7R (EIA) | 250Vdc | 0.22μF±10% | 5.5×5.0 | 3.15 | 5.0 | K1 | M1 |
| **RDER72E334K4□□H03□** | X7R (EIA) | 250Vdc | 0.33μF±10% | 7.5×5.5 | 4.0 | 5.0 | K1 | M1 |
| **RDER72E474K4□□H03□** | X7R (EIA) | 250Vdc | 0.47μF±10% | 7.5×5.5 | 4.0 | 5.0 | K1 | M1 |
| **RDER72E684K5□□H03□** | X7R (EIA) | 250Vdc | 0.68μF±10% | 7.5×7.5 | 4.0 | 5.0 | B1 | E1 |
| **RDER72E105K5□□H03□** | X7R (EIA) | 250Vdc | 1.0μF±10% | 7.5×7.5 | 4.0 | 5.0 | B1 | E1 |
| **RDER72E225MU□□H03□** | X7R (EIA) | 250Vdc | 2.2μF±20% | 7.7×12.5 | 4.0 | 5.0 | B1 | E1 |
| **RDER72J102K2□□H03□** | X7R (EIA) | 630Vdc | 1000pF±10% | 5.5×4.0 | 3.15 | 5.0 | K1 | M1 |
| **RDER72J152K2□□H03□** | X7R (EIA) | 630Vdc | 1500pF±10% | 5.5×4.0 | 3.15 | 5.0 | K1 | M1 |
| **RDER72J222K2□□H03□** | X7R (EIA) | 630Vdc | 2200pF±10% | 5.5×4.0 | 3.15 | 5.0 | K1 | M1 |
| **RDER72J332K2□□H03□** | X7R (EIA) | 630Vdc | 3300pF±10% | 5.5×4.0 | 3.15 | 5.0 | K1 | M1 |
| **RDER72J472K2□□H03□** | X7R (EIA) | 630Vdc | 4700pF±10% | 5.5×4.0 | 3.15 | 5.0 | K1 | M1 |
| **RDER72J682K2□□H03□** | X7R (EIA) | 630Vdc | 6800pF±10% | 5.5×4.0 | 3.15 | 5.0 | K1 | M1 |
| **RDER72J103K2□□H03□** | X7R (EIA) | 630Vdc | 10000pF±10% | 5.5×4.0 | 3.15 | 5.0 | K1 | M1 |
| **RDER72J153K2□□H03□** | X7R (EIA) | 630Vdc | 15000pF±10% | 5.5×4.0 | 3.15 | 5.0 | K1 | M1 |
| **RDER72J223K2□□H03□** | X7R (EIA) | 630Vdc | 22000pF±10% | 5.5×4.0 | 3.15 | 5.0 | K1 | M1 |
| **RDER72J333K3□□H03□** | X7R (EIA) | 630Vdc | 33000pF±10% | 5.5×5.0 | 3.15 | 5.0 | K1 | M1 |
| **RDER72J473K3□□H03□** | X7R (EIA) | 630Vdc | 47000pF±10% | 5.5×5.0 | 3.15 | 5.0 | K1 | M1 |
| **RDER72J683K4□□H03□** | X7R (EIA) | 630Vdc | 68000pF±10% | 7.5×5.5 | 3.15 | 5.0 | K1 | M1 |
| **RDER72J104K4□□H03□** | X7R (EIA) | 630Vdc | 0.10μF±10% | 7.5×5.5 | 3.15 | 5.0 | K1 | M1 |
| **RDER72J154K5□□H03□** | X7R (EIA) | 630Vdc | 0.15μF±10% | 7.5×8.0 | 4.0 | 5.0 | B1 | E1 |
| **RDER72J224K5□□H03□** | X7R (EIA) | 630Vdc | 0.22μF±10% | 7.5×8.0 | 4.0 | 5.0 | B1 | E1 |
| **RDER72J474MU□□H03□** | X7R (EIA) | 630Vdc | 0.47μF±20% | 7.7×13.0 | 4.0 | 5.0 | B1 | E1 |
| **RDER73A471K2□□H03□** | X7R (EIA) | 1000Vdc | 470pF±10% | 5.5×4.0 | 3.15 | 5.0 | K1 | M1 |
| **RDER73A681K2□□H03□** | X7R (EIA) | 1000Vdc | 680pF±10% | 5.5×4.0 | 3.15 | 5.0 | K1 | M1 |
| **RDER73A102K2□□H03□** | X7R (EIA) | 1000Vdc | 1000pF±10% | 5.5×4.0 | 3.15 | 5.0 | K1 | M1 |
| **RDER73A152K2□□H03□** | X7R (EIA) | 1000Vdc | 1500pF±10% | 5.5×4.0 | 3.15 | 5.0 | K1 | M1 |
| **RDER73A222K2□□H03□** | X7R (EIA) | 1000Vdc | 2200pF±10% | 5.5×4.0 | 3.15 | 5.0 | K1 | M1 |
| **RDER73A332K2□□H03□** | X7R (EIA) | 1000Vdc | 3300pF±10% | 5.5×4.0 | 3.15 | 5.0 | K1 | M1 |
| **RDER73A472K2□□H03□** | X7R (EIA) | 1000Vdc | 4700pF±10% | 5.5×4.0 | 3.15 | 5.0 | K1 | M1 |
| **RDER73A682K2□□H03□** | X7R (EIA) | 1000Vdc | 6800pF±10% | 5.5×4.0 | 3.15 | 5.0 | K1 | M1 |

Continued on the following page.

Continued from the preceding page.

| Part Number | Temp. Char. | Rated Voltage | Capacitance | Dimensions LxW (mm) | Dimension T (mm) | Lead Space F (mm) | Lead Style Code Bulk | Lead Style Code Taping |
|---|---|---|---|---|---|---|---|---|
| **RDER73A103K2□□H03□** | X7R (EIA) | 1000Vdc | 10000pF±10% | 5.5×4.0 | 3.15 | 5.0 | K1 | M1 |
| **RDER73A153K3□□H03□** | X7R (EIA) | 1000Vdc | 15000pF±10% | 5.5×5.0 | 4.0 | 5.0 | K1 | M1 |
| **RDER73A223K3□□H03□** | X7R (EIA) | 1000Vdc | 22000pF±10% | 5.5×5.0 | 4.0 | 5.0 | K1 | M1 |
| **RDER73A333K4□□H03□** | X7R (EIA) | 1000Vdc | 33000pF±10% | 7.5×5.5 | 4.0 | 5.0 | K1 | M1 |
| **RDER73A473K4□□H03□** | X7R (EIA) | 1000Vdc | 47000pF±10% | 7.5×5.5 | 4.0 | 5.0 | K1 | M1 |
| **RDER73A683K5□□H03□** | X7R (EIA) | 1000Vdc | 68000pF±10% | 7.5×8.0 | 4.0 | 5.0 | B1 | E1 |
| **RDER73A104K5□□H03□** | X7R (EIA) | 1000Vdc | 0.10μF±10% | 7.5×8.0 | 4.0 | 5.0 | B1 | E1 |
| **RDER73A224MU□□H03□** | X7R (EIA) | 1000Vdc | 0.22μF±20% | 7.7×13.0 | 4.0 | 5.0 | B1 | E1 |

Two blank columns are filled with the lead style code. Please refer to the 3 columns on the right for the appropriate code.
The last blank column is filled with the packaging code. (B: bulk, A: ammo pack)



## High Dielectric Constant Type, F/Y5V Characteristics

| Part Number | Temp. Char. | Rated Voltage | Capacitance | Dimensions LxW (mm) | Dimension T (mm) | Lead Space F (mm) | Lead Style Code Bulk | Lead Style Code Taping |
|---|---|---|---|---|---|---|---|---|
| **RDEF11H103Z0□□H01□** | F (JIS) | 50Vdc | 10000pF+80/-20% | 4.0×3.5 | 2.5 | 5.0 | K1 | M1 |
| **RDEF11H103Z0□□H01□** | F (JIS) | 50Vdc | 10000pF+80/-20% | 5.0×3.5 | 2.5 | 2.5 | P1 | S1 |
| **RDEF51H103Z0□□H03□** | Y5V (EIA) | 50Vdc | 10000pF+80/-20% | 4.0×3.5 | 2.5 | 5.0 | K1 | M1 |
| **RDEF51H103Z0□□H03□** | Y5V (EIA) | 50Vdc | 10000pF+80/-20% | 5.0×3.5 | 2.5 | 2.5 | P1 | S1 |
| **RDEF11H223Z0□□H01□** | F (JIS) | 50Vdc | 22000pF+80/-20% | 4.0×3.5 | 2.5 | 5.0 | K1 | M1 |
| **RDEF11H223Z0□□H01□** | F (JIS) | 50Vdc | 22000pF+80/-20% | 5.0×3.5 | 2.5 | 2.5 | P1 | S1 |
| **RDEF51H223Z0□□H03□** | Y5V (EIA) | 50Vdc | 22000pF+80/-20% | 4.0×3.5 | 2.5 | 5.0 | K1 | M1 |
| **RDEF51H223Z0□□H03□** | Y5V (EIA) | 50Vdc | 22000pF+80/-20% | 5.0×3.5 | 2.5 | 2.5 | P1 | S1 |
| **RDEF11H473Z0□□H01□** | F (JIS) | 50Vdc | 47000pF+80/-20% | 4.0×3.5 | 2.5 | 5.0 | K1 | M1 |
| **RDEF11H473Z0□□H01□** | F (JIS) | 50Vdc | 47000pF+80/-20% | 5.0×3.5 | 2.5 | 2.5 | P1 | S1 |
| **RDEF51H473Z0□□H03□** | Y5V (EIA) | 50Vdc | 47000pF+80/-20% | 4.0×3.5 | 2.5 | 5.0 | K1 | M1 |
| **RDEF51H473Z0□□H03□** | Y5V (EIA) | 50Vdc | 47000pF+80/-20% | 5.0×3.5 | 2.5 | 2.5 | P1 | S1 |
| **RDEF11H104Z0□□H01□** | F (JIS) | 50Vdc | 0.1μF+80/-20% | 4.0×3.5 | 2.5 | 5.0 | K1 | M1 |
| **RDEF11H104Z0□□H01□** | F (JIS) | 50Vdc | 0.1μF+80/-20% | 5.0×3.5 | 2.5 | 2.5 | P1 | S1 |
| **RDEF51H104Z0□□H03□** | Y5V (EIA) | 50Vdc | 0.1μF+80/-20% | 4.0×3.5 | 2.5 | 5.0 | K1 | M1 |
| **RDEF51H104Z0□□H03□** | Y5V (EIA) | 50Vdc | 0.1μF+80/-20% | 5.0×3.5 | 2.5 | 2.5 | P1 | S1 |

Two blank columns are filled with the lead style code. Please refer to the 3 columns on the right for the appropriate code.
The last blank column is filled with the packaging code. (B: bulk, A: ammo pack)

# Specifications and Test Methods



| No. | Item | | Specifications: Temperature Compensating Type | Specifications: High Dielectric Constant Type | Test Method |
|---|---|---|---|---|---|
| 1 | Operating Temperature Range | | -55 to +125°C | Char. X7R, X7S: -55 to +125°C<br>Char. F: -25 to +85°C<br>Char. Y5V: -30 to +85°C | – |
| 2 | Appearance | | No defects or abnormalities | | Visual inspection |
| 3 | Dimension and Marking | | See previous pages | | Visual inspection, Vernier Caliper |
| 4 | Dielectric Strength | Between Terminals | No defects or abnormalities | | The capacitors should not be damaged when test voltages of Table are applied between the terminals for 1 to 5 sec. (Charge/Discharge current ≦ 50mA) |

| | Rated Voltage | Test Voltage |
|---|---|---|
| Temperature Compensating Type | DC50V, DC100V | 300% of the rated voltage |
| | DC250V | 200% of the rated voltage |
| | DC630V | 150% of the rated voltage |
| | DC1kV | 130% of the rated voltage |
| High Dielectric Constant Type | DC25V, DC50V | 250% of the rated voltage |
| | DC100V, DC250V | 200% of the rated voltage |
| | DC630V | 150% of the rated voltage |
| | DC1kV | 120% of the rated voltage |

| No. | Item | | Specifications | Test Method |
|---|---|---|---|---|
| 4 | Dielectric Strength | Body Insulation | No defects or abnormalities | The capacitor is placed in a container with metal balls of 1mm diameter so that each terminal, short-circuited, is kept approximately 2mm from the balls as shown in the figure, for 1 to 5 sec. between capacitor terminals and metal balls. (Charge/Discharge current ≦ 50mA) |

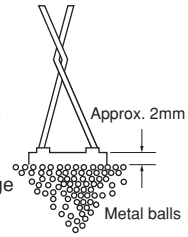


| Rated Voltage | Test Voltage |
|---|---|
| DC25V, DC50V | 250% of the rated voltage |
| DC100V, DC250V | 200% of the rated voltage |
| DC630V, DC1kV | DC1300V |

| No. | Item | | Specifications | Test Method |
|---|---|---|---|---|
| 5 | Insulation Resistance | Between Terminals | Rated Voltage: DC25V, DC50V, DC100V<br>10,000MΩ min. or 500MΩ • μF min. whichever is smaller<br>Rated Voltage: DC250V, DC630V<br>10,000MΩ min. or 100MΩ • μF min. whichever is smaller | The insulation resistance should be measured with a DC voltage not exceeding the rated voltage (DC500±50V in case of rated vlotage: DC630V, DC1kV) at normal temperature and humidity and within 2 min. of charging. (Charge/Discharge current ≦ 50mA) |

| No. | Item | Specifications: Temperature Compensating Type | Specifications: High Dielectric Constant Type | Test Method |
|---|---|---|---|---|
| 6 | Capacitance | Within the specified tolerance | | The capacitance, Q/D.F. should be measured at 25°C at the frequency and voltage shown in the table. |
| 7 | Q/Dissipation Factor (D.F.) | 30pF min.: Q≧1,000<br>30pF max.: Q≧400+20C<br>C: Nominal capacitance (pF) | Char. X7R: 0.025 max.<br>Char. F, Y5V: 0.05 max.<br>Char. X7S: 0.125 max. | |

Temperature Compensating Type

| Item \ Capacitance | C≦1000pF | C>1000pF |
|---|---|---|
| Frequency | 1±0.1MHz | 1±0.1kHz |
| Voltage | AC0.5 to 5V (r.m.s.) | AC1±0.2V (r.m.s.) |

High Dielectric Constant Type

| Item \ Capacitance | C≦10μF | C>10μF |
|---|---|---|
| Frequency | 1±0.1kHz | 120±24Hz |
| Voltage | AC1±0.2V (r.m.s.) | AC0.5±0.1V (r.m.s.) |

Continued on the following page.

# Specifications and Test Methods

Continued from the preceding page.

| No. | Item | | Specifications: Temperature Compensating Type | Specifications: High Dielectric Constant Type | Test Method |
|---|---|---|---|---|---|
| 8 | Capacitance Temperature Characteristics | Capacitance Change | Within the specified tolerance (Table A on last column) | Within the specified tolerance (Table B on last column) | The capacitance change should be measured after 5 min. at each specified temperature stage.<br>(1) Temperature Compensating Type<br>The temperature coefficient is determined using the capacitance measured in step 3 as a reference. When cycling the temperature sequentially from step 1 through 5 (-55 to +125°C) the capacitance should be within the specified tolerance for the temperature coefficient and capacitance change as shown in Table A. The capacitance drift is calculated by dividing the differences between the maximum and minimum measured values in step 1, 3 and 5 by the cap. value in step 3.<br>(2) High Dielectric Constant Type<br>The ranges of capacitance change compared with the 25°C (Char. F: 20°C) value over the temperature ranges as shown in Table B should be within the specified ranges.<br>• Pretreatment (for high dielectric constant type)<br>Perform a heat treatment at 150+0/-10°C for 1 hr., and then let sit at room temperature for 24±2 hrs. |
| | | Temperature Coefficient | Within the specified tolerance (Table A on last column) | | |
| | | Capacitance Drift | Within ±0.2% or ±0.05pF, whichever is larger | | |
| 9 | Terminal Strength | Tensile Strength | Termination not to be broken or loosened | | As in the figure, fix the capacitor body, apply the force gradually to each lead in the radial direction of the capacitor until reaching 10N and then keep the force applied for 10±1 sec.<br> 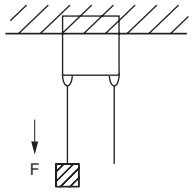 <br> |
| | | Bending Strength | Termination not to be broken or loosened | | Each lead wire should be subjected to a force of 2.5N and then bent 90° at the point of egress in one direction. Each wire is then returned to the original position and bent 90° in the opposite direction at the rate of one bend per 2 to 3 sec. |
| 10 | Vibration Resistance | Appearance | No defects or abnormalities | | The capacitor is soldered securely to a supporting terminal and a 10 to 55Hz vibration of 1.5mm peak-peak amplitude is applied for 6 hrs. total, 2 hrs. in each mutually perpendicular direction. Allow 1 min. to cycle the frequency from 10Hz to 55Hz and the converse. |
| | | Capacitance | Within the specified tolerance | | |
| | | Q/D.F. | 30pF min.: Q≧1,000<br>30pF max.: Q≧400+20C<br>C: Nominal capacitance (pF) | Char. X7R: 0.025 max.<br>Char. F, Y5V: 0.05 max.<br>Char. X7S: 0.125 max. | |
| 11 | Solderability of Leads | | Lead wire should be soldered with uniform coating on the axial direction over 3/4 of the circumferential direction. | | The terminal of a capacitor is dipped into a 25% ethanol (JIS-K-8101) solution of rosin (JIS-K-5902) and then into molten solder for 2±0.5 sec. In both cases the depth of dipping is up to about 1.5mm to 2mm from the terminal body.<br>Temp. of solder: 245±5°C Lead Free Solder (Sn-3.0Ag-0.5Cu)<br>235±5°C H60A or H63A Eutectic Solder |
| 12 | Resistance to Soldering Heat | Appearance | No defects or abnormalities | | The lead wire is immersed in the melted solder 1.5mm to 2mm from the main body at 350±10°C for 3.5±0.5 sec.<br>The specified items are measured after 24±2 hrs.<br>• Pretreatment (for high dielectric constant type)<br>Perform a heat treatment at 150+0/-10°C for 1 hr., and then let sit at room temperature for 24±2 hrs. |
| | | Capacitance Change | Within ±2.5% or ±0.25pF (whichever is larger) | Char. X7R, X7S: Within ±10%<br>Char. F, Y5V: Within ±20% | |
| | | Dielectric Strength (Between Terminals) | No defects | | |

Continued on the following page.

# Specifications and Test Methods

Continued from the preceding page.

| No. | Item | | Specifications: Temperature Compensating Type | Specifications: High Dielectric Constant Type | Test Method |
|---|---|---|---|---|---|
| 13 | Temperature Cycle | Appearance | No defects or abnormalities | | The capacitor should be subjected to 5 temperature cycles.<br>Remove and set for 24±2 hrs. at room temperature, then measure.<br>• Pretreatment (for high dielectric constant type)<br>Perform a heat treatment at 150+0/-10°C for 1 hr., and then let sit at room temperature for 24±2 hrs. |
| | | Capacitance Change | Within ±5% or ±0.5pF (whichever is larger) | Char. X7R, X7S: Within ±12.5%<br>Char. F, Y5V: Within ±30% | |
| | | Q/D.F. | 30pF min.: Q≧350<br>10pF to 30pF: Q≧275+5C/2<br>10pF max.: Q≧200+10C<br>C: Nominal capacitance (pF) | Char. X7R: 0.05 max.<br>Char. F, Y5V: 0.075 max.<br>Char. X7S: 0.2 max. | |
| | | Insulation Resistance | Rated Voltage: DC25V, DC50V, DC100V<br>1,000MΩ, 50MΩ • μF min. (whichever is smaller)<br>Rated Voltage: DC250V, DC630V<br>1,000MΩ, 10MΩ • μF min. (whichever is smaller) | | |
| | | Dielectric Strength (Between Terminals) | No defects or abnormalities | | |
| 14 | Humidity (Steady State) | Appearance | No defects or abnormalities | | Set the capacitor at 40±2°C and relative humidity of 90 to 95% for $500^{+24}_{0}$ hrs.<br>Remove and set for 24±2 hrs. at room temperature, then measure.<br>• Pretreatment (for high dielectric constant type)<br>Perform a heat treatment at 150+0/-10°C for 1 hr., and then let sit at room temperature for 24±2 hrs. |
| | | Capacitance Change | Within ±5% or ±0.5pF (whichever is larger) | Char. X7R, X7S: Within ±15%<br>Char. F, Y5V: Within ±30% | |
| | | Q/D.F. | 30pF min.: Q≧350<br>10pF to 30pF: Q≧275+5C/2<br>10pF max.: Q≧200+10C<br>C: Nominal capacitance (pF) | Char. X7R: 0.05 max.<br>Char. F, Y5V: 0.075 max.<br>Char. X7S: 0.2 max. | |
| | | Insulation Resistance | Rated Voltage: DC25V, DC50V, DC100V<br>1,000MΩ, 50MΩ • μF min. (whichever is smaller)<br>Rated Voltage: DC250V, DC630V<br>1,000MΩ, 10MΩ • μF min. (whichever is smaller) | | |
| 15 | Humidity Load | Appearance | No defects or abnormalities | | Apply the rated voltage for $500^{+24}_{0}$ hrs. at 40±2°C and in 90 to 95% humidity.<br>Remove and set for 24±2 hrs. at room temperature, then measure.<br>(Charge/Discharge current ≦50mA)<br>• Pretreatment (for high dielectric constant type)<br>Perform a heat treatment at 150+0/-10°C for 1 hr., and then let sit at room temperature for 24±2 hrs. |
| | | Capacitance Change | Within ±7.5% or ±0.75pF (whichever is larger) | Char. X7R, X7S: Within ±15%<br>Char. F, Y5V: Within ±30% | |
| | | Q/D.F. | 30pF min.: Q≧200<br>30pF max.: Q≧100+10C/3<br>C: Nominal capacitance (pF) | Char. X7R: 0.05 max.<br>Char. F, Y5V: 0.075 max.<br>Char. X7S: 0.2 max. | |
| | | Insulation Resistance | Rated Voltage: DC25V, DC50V, DC100V<br>500MΩ or 25MΩ • μF min. (whichever is smaller)<br>Rated Voltage: DC250V, DC630V<br>1,000MΩ or 10MΩ • μF min. (whichever is smaller) | | |
| 16 | High Temperature Load | Appearance | No defects or abnormalities | | Apply voltage in Table for $1000^{+48}_{0}$ hrs. at the maximum operating temperature±3°C.<br>Remove and set for 24±2 hrs. at room temperature, then measure. (Charge/Discharge current ≦50mA)<br>• Pretreatment (for high dielectric constant type)<br>Appy test voltage for 1 hr., at test temperature.<br>Remove and set for 24±2 hrs. at room temperature. |
| | | Capacitance Change | Within ±3% or ±0.3pF (whichever is larger) | Char. X7R, X7S:<br>Within ±15%<br>(Rated Voltage: DC630V or less)<br>Within ±20%<br>(Rated Voltage: DC1kV)<br>Char. F, Y5V: Within ±30% | |
| | | Q/D.F. | 30pF min.: Q≧350<br>10pF to 30pF: Q≧275+5C/2<br>10pF max.: Q≧200+10C<br>C: Nominal capacitance (pF) | Char. X7R: 0.05 max.<br>Char. F, Y5V: 0.075 max.<br>Char. X7S: 0.2 max. | |
| | | Insulation Resistance | Rated Voltage: DC25V, DC50V, DC100V<br>1,000MΩ, 50MΩ • μF min. (whichever is smaller)<br>Rated Voltage: DC250V, DC630V<br>1,000MΩ, 10MΩ • μF min. (whichever is smaller) | | |
| 17 | Solvent Resistance | Appearance | No defects or abnormalities | | The capacitor should be fully immersed, unagitated, in reagent at 20 to 25°C for 30±5 sec. and then removed gently. Marking on the surface of the capacitor should immediately be visually examined.<br>Reagent:<br>• Isopropyl alcohol |
| | | Marking | Legible | | |

| Rated Voltage | Test Voltage |
|---|---|
| Temperature Compensating Type: DC50V, DC100V, DC250V | 150% of the rated voltage |
| Temperature Compensating Type: DC630V, DC1kV | 120% of the rated voltage |
| High Dielectric Constant Type: DC25V, DC50V, DC100V, DC250V | 150% of the rated voltage |
| High Dielectric Constant Type: DC630V | 120% of the rated voltage |
| High Dielectric Constant Type: DC1kV | 110% of the rated voltage |

## Table A

| Char. | Nominal Values (ppm/°C) *1 | Capacitance Change from 25°C (%) | | | | | |
|---|---|---|---|---|---|---|---|
| | | –55°C | | –30°C | | –10°C | |
| | | Max. | Min. | Max. | Min. | Max. | Min. |
| C0G | 0±30 | 0.58 | –0.24 | 0.40 | –0.17 | 0.25 | –0.11 |
| U2J | -750±120 | 8.78 | 5.04 | 6.04 | 3.47 | 3.84 | 2.21 |

*1: Nominal values denote the temperature coefficient within a range of 25 to 125°C

## Table B

| Char. | Temp. Range | Reference Temp. | Cap. Change Rate |
|---|---|---|---|
| X7R | –55 to +125°C | 25°C | Within ±15% |
| X7S | | | Within ±22% |
| Y5V | –30 to + 85°C | | Within $^{+22}_{-82}$% |
| F | –25 to + 85°C | 20°C | Within $^{+30}_{-80}$% |

# Radial Lead Type Monolithic Ceramic Capacitors

muRata

## RDE Series Large Capacitance and High Allowable Ripple Current (For General Use Only) (DC250V-DC630V)

### ■ Features

1. Higher capacitance with DC-Bias; approximately 40% higher than X7R under loaded rated voltage.
2. Meet LF (Lead Free) and HF (Halogen Free)
3. Allowable higher ripple current
4. Reduces acoustic noise
   Approximately 15dB reduction in comparison to leaded X7R characteristics parts.
   Approximately 30dB reduction in comparison to SMD X7R characteristics part because the contact area is smaller than a SMD.

Dimensions code: 2/3/4
Lead style code: K1

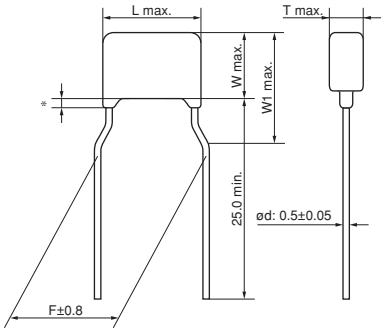


* Coating extension does not exceed the end of the lead bend.
· Lead Wire: Solder Coated CP Wire

(in mm)

### ■ Applications

1. DC smoothing capacitor for LED bulb
2. PFC capacitor for general use SMPS
3. Replace Al-E capacitor for long-life equipment

### ■ Dimensions

| Dimensions and Lead Style Code | DC Rated Voltage | Dimensions (mm) | | | | | |
|---|---|---|---|---|---|---|---|
| | | L | W | W1 | T | F | d |
| **2K1/2M1** | 250V/450V/630V | 5.5 | 4.0 | 6.0 | See the individual product specification | 5.0 | 0.5 |
| **3K1/3M1** | 250V/450V/630V | 5.5 | 5.0 | 7.5 | | 5.0 | 0.5 |
| **4K1/4M1** | 250V/450V/630V | 7.5 | 5.5 | 8.0 | | 5.0 | 0.5 |
| **5B1/5E1** | 250V/450V/630V | 7.5 | 7.5* | - | | 5.0 | 0.5 |
| **UB1/UE1** | 250V/450V/630V | 7.7 | 12.5* | - | | 5.0 | 0.5 |

*DC630V: W+0.5mm

Dimensions code: 5
Lead style code: B1

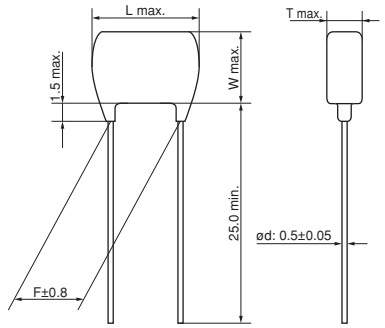


· Lead Wire: Solder Coated CP Wire

(in mm)

Dimensions code: U
Lead style code: B1

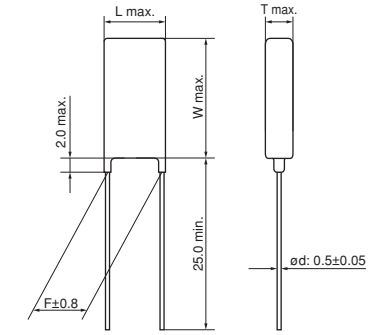


· Lead Wire: Solder Coated CP Wire

(in mm)

## ■ Marking

| Dimensions Code \ Rated Voltage | DC250V | DC450V | DC630V |
|---|---|---|---|
| Temp. Char. | X7T | | |
| 2 | Ⓜ 683 K47 | Ⓜ 153 K97 | Ⓜ 153 K77 |
| 3, 8 | Ⓜ 334 K47 | Ⓜ 104 K97 | Ⓜ 223 K77 |
| 5, U | Ⓜ 225 M47 | Ⓜ 474 K97 | Ⓜ 474 M77 |
| Temperature Characteristics | Marked with code (X7T char.: 7) | | |
| Nominal Capacitance | Marked with 3 figures | | |
| Capacitance Tolerance | Marked with code | | |
| Rated Voltage | Marked with code (DC250V: 4, DC450V: 9, DC630V: 7) | | |
| Manufacturer's Identification | Marked with Ⓜ | | |

4

## High Dielectric Constant Type, X7T Characteristics

| Part Number | Temp. Char. | Rated Voltage | Capacitance | Dimensions LxW (mm) | Dimension T (mm) | Lead Space F (mm) | Lead Style Code Bulk | Lead Style Code Taping |
|---|---|---|---|---|---|---|---|---|
| **RDED72E333K2□□H03□** | X7T (EIA) | 250Vdc | 33000pF±10% | 5.5×4.0 | 3.15 | 5.0 | K1 | M1 |
| **RDED72E473K2□□H03□** | X7T (EIA) | 250Vdc | 47000pF±10% | 5.5×4.0 | 3.15 | 5.0 | K1 | M1 |
| **RDED72E683K2□□H03□** | X7T (EIA) | 250Vdc | 68000pF±10% | 5.5×4.0 | 3.15 | 5.0 | K1 | M1 |
| **RDED72E104K3□□H03□** | X7T (EIA) | 250Vdc | 0.10μF±10% | 5.5×5.0 | 4.0 | 5.0 | K1 | M1 |
| **RDED72E154K3□□H03□** | X7T (EIA) | 250Vdc | 0.15μF±10% | 5.5×5.0 | 4.0 | 5.0 | K1 | M1 |
| **RDED72E224K4□□H03□** | X7T (EIA) | 250Vdc | 0.22μF±10% | 7.5×5.5 | 4.0 | 5.0 | K1 | M1 |
| **RDED72E334K4□□H03□** | X7T (EIA) | 250Vdc | 0.33μF±10% | 7.5×5.5 | 4.0 | 5.0 | K1 | M1 |
| **RDED72E474K5□□H03□** | X7T (EIA) | 250Vdc | 0.47μF±10% | 7.5×7.5 | 4.5 | 5.0 | B1 | E1 |
| **RDED72E684K5□□H03□** | X7T (EIA) | 250Vdc | 0.68μF±10% | 7.5×7.5 | 4.5 | 5.0 | B1 | E1 |
| **RDED72E105K5□□H03□** | X7T (EIA) | 250Vdc | 1.0μF±10% | 7.5×7.5 | 4.5 | 5.0 | B1 | E1 |
| **RDED72E225MU□□H03□** | X7T (EIA) | 250Vdc | 2.2μF±20% | 7.7×12.5 | 4.5 | 5.0 | B1 | E1 |
| **RDED72W103K2□□H03□** | X7T (EIA) | 450Vdc | 10000pF±10% | 5.5×4.0 | 3.15 | 5.0 | K1 | M1 |
| **RDED72W153K2□□H03□** | X7T (EIA) | 450Vdc | 15000pF±10% | 5.5×4.0 | 3.15 | 5.0 | K1 | M1 |
| **RDED72W223K2□□H03□** | X7T (EIA) | 450Vdc | 22000pF±10% | 5.5×4.0 | 3.15 | 5.0 | K1 | M1 |
| **RDED72W333K2□□H03□** | X7T (EIA) | 450Vdc | 33000pF±10% | 5.5×4.0 | 3.15 | 5.0 | K1 | M1 |
| **RDED72W473K2□□H03□** | X7T (EIA) | 450Vdc | 47000pF±10% | 5.5×4.0 | 3.15 | 5.0 | K1 | M1 |
| **RDED72W683K3□□H03□** | X7T (EIA) | 450Vdc | 68000pF±10% | 5.5×5.0 | 4.0 | 5.0 | K1 | M1 |
| **RDED72W104K3□□H03□** | X7T (EIA) | 450Vdc | 0.10μF±10% | 5.5×5.0 | 4.0 | 5.0 | K1 | M1 |
| **RDED72W154K4□□H03□** | X7T (EIA) | 450Vdc | 0.15μF±10% | 7.5×5.5 | 4.0 | 5.0 | K1 | M1 |
| **RDED72W224K5□□H03□** | X7T (EIA) | 450Vdc | 0.22μF±10% | 7.5×7.5 | 4.5 | 5.0 | B1 | E1 |
| **RDED72W334K5□□H03□** | X7T (EIA) | 450Vdc | 0.33μF±10% | 7.5×7.5 | 4.5 | 5.0 | B1 | E1 |
| **RDED72W474K5□□H03□** | X7T (EIA) | 450Vdc | 0.47μF±10% | 7.5×7.5 | 4.5 | 5.0 | B1 | E1 |
| **RDED72W564K5□□H03□** | X7T (EIA) | 450Vdc | 0.56μF±10% | 7.5×7.5 | 4.5 | 5.0 | B1 | E1 |
| **RDED72W105MU□□H03□** | X7T (EIA) | 450Vdc | 1.0μF±20% | 7.7×12.5 | 4.5 | 5.0 | B1 | E1 |
| **RDED72W125MU□□H03□** | X7T (EIA) | 450Vdc | 1.2μF±20% | 7.7×12.5 | 4.5 | 5.0 | B1 | E1 |
| **RDED72J103K2□□H03□** | X7T (EIA) | 630Vdc | 10000pF±10% | 5.5×4.0 | 3.15 | 5.0 | K1 | M1 |
| **RDED72J153K2□□H03□** | X7T (EIA) | 630Vdc | 15000pF±10% | 5.5×4.0 | 3.15 | 5.0 | K1 | M1 |
| **RDED72J223K3□□H03□** | X7T (EIA) | 630Vdc | 22000pF±10% | 5.5×5.0 | 4.0 | 5.0 | K1 | M1 |
| **RDED72J333K3□□H03□** | X7T (EIA) | 630Vdc | 33000pF±10% | 5.5×5.0 | 4.0 | 5.0 | K1 | M1 |
| **RDED72J473K3□□H03□** | X7T (EIA) | 630Vdc | 47000pF±10% | 5.5×5.0 | 4.0 | 5.0 | K1 | M1 |
| **RDED72J683K4□□H03□** | X7T (EIA) | 630Vdc | 68000pF±10% | 7.5×5.5 | 4.0 | 5.0 | K1 | M1 |
| **RDED72J104K5□□H03□** | X7T (EIA) | 630Vdc | 0.10μF±10% | 7.5×8.0 | 4.5 | 5.0 | B1 | E1 |
| **RDED72J154K5□□H03□** | X7T (EIA) | 630Vdc | 0.15μF±10% | 7.5×8.0 | 4.5 | 5.0 | B1 | E1 |

Continued on the following page.

Continued from the preceding page.

| Part Number | Temp. Char. | Rated Voltage | Capacitance | Dimensions LxW (mm) | Dimension T (mm) | Lead Space F (mm) | Lead Style Code Bulk | Lead Style Code Taping |
|---|---|---|---|---|---|---|---|---|
| **RDED72J224K5□□H03□** | X7T (EIA) | 630Vdc | 0.22μF±10% | 7.5×8.0 | 4.5 | 5.0 | B1 | E1 |
| **RDED72J274K5□□H03□** | X7T (EIA) | 630Vdc | 0.27μF±10% | 7.5×8.0 | 4.5 | 5.0 | B1 | E1 |
| **RDED72J474MU□□H03□** | X7T (EIA) | 630Vdc | 0.47μF±20% | 7.7×13.0 | 4.5 | 5.0 | B1 | E1 |
| **RDED72J564MU□□H03□** | X7T (EIA) | 630Vdc | 0.56μF±20% | 7.7×13.0 | 4.5 | 5.0 | B1 | E1 |

Two blank columns are filled with the lead style code. Please refer to the 3 columns on the right for the appropriate code.
The last blank column is filled with the packaging code. (B: bulk, A: ammo pack)

# Specifications and Test Methods

| No. | Item | | Specifications | Test Method |
|---|---|---|---|---|
| 1 | Operating Temperature Range | | -55 to +125°C | – |
| 2 | Appearance | | No defects or abnormalities | Visual inspection |
| 3 | Dimension and Marking | | See previous pages | Visual inspection, Vernier Caliper |
| 4 | Dielectric Strength | Between Terminals | No defects or abnormalities | The capacitor should not be damaged when voltage in Table is applied between the terminations for 1 to 5 sec.<br>(Charge/Discharge current ≦ 50mA)<br>Rated Voltage / Test Voltage<br>DC250V: 200% of the rated voltage<br>DC450V: 150% of the rated voltage<br>DC630V: 120% of the rated voltage |
| | | Body Insulation | No defects or abnormalities | The capacitor is placed in a container with metal balls of 1mm diameter so that each terminal, short-circuit, is kept approximately 2mm from the balls as shown in the figure, and 200% of the rated DC voltage is impressed for 1 to 5 sec. between capacitor terminals and metal balls.<br>(Charge/Discharge current ≦ 50mA)<br> 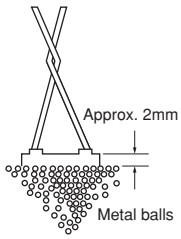 |
| 5 | Insulation Resistance | Between Terminals | More than 10,000MΩ or 100MΩ · μF, Whichever is smaller | The insulation resistance should be measured with DC500±50V (DC250±25V in case of rated voltage: DC250V,DC450V) at normal temperature and humidity and within 2 min. of charging.<br>(Charge/Discharge current ≦ 50mA) |
| 6 | Capacitance | | Within the specified tolerance | The capacitance/D.F. should be measured at the frequency of 1±0.1kHz and a voltage of AC1±0.2V(r.m.s.). |
| 7 | Dissipation Factor (D.F.) | | 0.01 max. | |
| 8 | Capacitance Temperature Characteristics | | Within +22/-33% | The capacitance change should be measured after 5 min. at each specified temperature stage.<br>Step / Temperature (°C)<br>1: 25±2<br>2: -55±3<br>3: 25±2<br>4: 125±3<br>5: 25±2 |
| 9 | Terminal Strength | Tensile Strength | Termination not to be broken or loosened | As in the figure, fix the capacitor body, apply the force gradually to each lead in the radial direction of the capacitor until reaching 10N and then keep the force applied for 10±1 sec.<br> 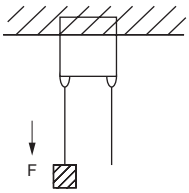 |
| | | Bending Strength | Termination not to be broken or loosened | Each lead wire should be subjected to a force of 2.5N and then bent 90° at the point of egress in one direction. Each wire is then returned to the original position and bent 90° in the opposite direction at the rate of one bend per 2 to 3 sec. |
| 10 | Vibration Resistance | Appearance | No defects or abnormalities | The capacitor should be firmly soldered to the supporting lead wire and vibrated at a frequency range of 10 to 55Hz, 1.5mm in total amplitude, with about a 1 minute rate of vibration change from 10Hz to 55Hz and back to 10Hz. Apply for a total of 6 hrs., 2 hrs. each in 3 mutually perpendicular directions. |
| | | Capacitance | Within the specified tolerance | |
| | | D.F. | 0.01 max. | |

Continued on the following page.

# Specifications and Test Methods

Continued from the preceding page.

| No. | Item | | Specifications | Test Method |
|---|---|---|---|---|
| 11 | Solderability of Leads | | Lead wire should be soldered with uniform coating on the axial direction over 3/4 of the circumferential direction. | The terminal of a capacitor is dipped into a solution of ethanol (JIS-K-8101) and rosin (JIS-K-5902) (25% rosin in weight proportion) and then into molten solder (JIS-Z-3282) for 2±0.5 sec. In both cases the depth of dipping is up to about 1.5 to 2mm from the terminal body.<br>Temp. of solder: 245±5°C Lead Free Solder (Sn-3.0Ag-0.5Cu)<br>235±5°C H60A or H63A Eutectic Solder |
| 12 | Resistance to Soldering Heat | Appearance | No defects or abnormalities | The lead wire is immersed in the melted solder 1.5 to 2mm from the main body at 350±10°C for 3.5±0.5 sec. The specified items are measured after 24±2 hrs.<br>• Pretreatment<br>Perform a heat treatment at 150+0/-10°C for 1 hr., and then let sit at room temperature for 24±2 hrs. |
| | | Capacitance Change | Within ±10% | |
| | | Dielectric Strength (Between Terminals) | No defects | |
| 13 | Temperature Cycle | Appearance | No defects or abnormalities | The capacitor should be subjected to 5 temperature cycles.<br>Step / Temperature (°C) / Time (min)<br>1 / -55±3 / 30±3<br>2 / Room Temp. / 3 max.<br>3 / 125±3 / 30±3<br>4 / Room Temp. / 3 max.<br>• Pretreatment<br>Perform a heat treatment at 150+0/-10°C for 1 hr., and then let sit at room temperature for 24±2 hrs. |
| | | Capacitance Change | Within ±7.5% | |
| | | D.F. | 0.01 max. | |
| | | Insulation Resistance | More than 10,000MΩ or 100MΩ · μF (Whichever is smaller) | |
| | | Dielectric Strength (Between Terminals) | No defects or abnormalities | |
| 14 | Humidity (Steady State) | Appearance | No defects or abnormalities | Set the capacitor at 40±2°C and relative humidity of 90 to 95% for 500 $^{+24}_{0}$ hrs. Remove and set for 24±2 hrs. at room temperature, then measure.<br>• Pretreatment<br>Perform a heat treatment at 150+0/-10°C for 1 hr., and then let sit at room temperature for 24±2 hrs. |
| | | Capacitance Change | Within ±12.5% | |
| | | D.F. | 0.02 max. | |
| | | Insulation Resistance | More than 1,000MΩ or 10MΩ · μF (Whichever is smaller) | |
| 15 | Humidity Load | Appearance | No defects or abnormalities | Apply the rated voltage at 40±2°C and relative humidity of 90 to 95% for 500 $^{+24}_{0}$ hrs. Remove and set for 24±2 hrs. at room temperature, then measure. (Charge/Discharge current ≦ 50mA)<br>• Pretreatment<br>Perform a heat treatment at 150+0/-10°C for 1 hr., and then let sit at room temperature for 24±2 hrs. |
| | | Capacitance Change | Within ±12.5% | |
| | | D.F. | 0.02 max. | |
| | | Insulation Resistance | More than 1,000MΩ or 10MΩ · μF (Whichever is smaller) | |
| 16 | High Temperature Load | Appearance | No defects or abnormalities | Apply voltage in Table for 1000 $^{+48}_{0}$ hrs. at the maximum operating temperature. Remove and set for 24±2 hrs. at room temperature, then measure. (Charge/Discharge current ≦ 50mA)<br>Rated Voltage / Test Voltage<br>DC250V / 150% of the rated voltage<br>DC450V / 130% of the rated voltage<br>DC630V / 120% of the rated voltage<br>• Pretreatment<br>Apply test voltage for 1 hr., at test temperature. Remove and set for 24±2 hrs. at room temperature. |
| | | Capacitance Change | Within ±12.5% | |
| | | D.F. | 0.02 max. | |
| | | Insulation Resistance | More than 1,000MΩ or 10MΩ · μF (Whichever is smaller) | |
| 17 | Solvent Resistance | Appearance | No defects or abnormalities | The capacitor should be fully immersed, unagitated, in reagent at 20 to 25°C for 30±5 sec. and then removed gently. Marking on the surface of the capacitor should immediately be visually examined.<br>Reagent :<br>• Isopropyl alcohol |
| | | Marking | Legible | |

# RCE Series Characteristics Reference Data (Typical Example)

## ■ Capacitance - Temperature Characteristics

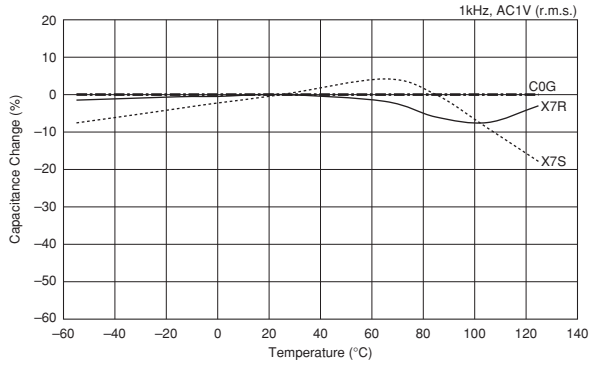


## ■ Capacitance - DC Voltage Characteristics

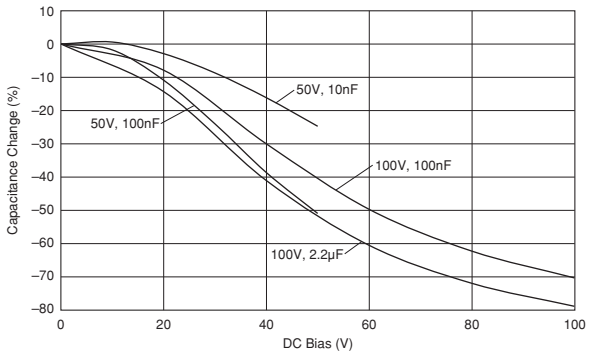


## ■ Capacitance Change - Aging

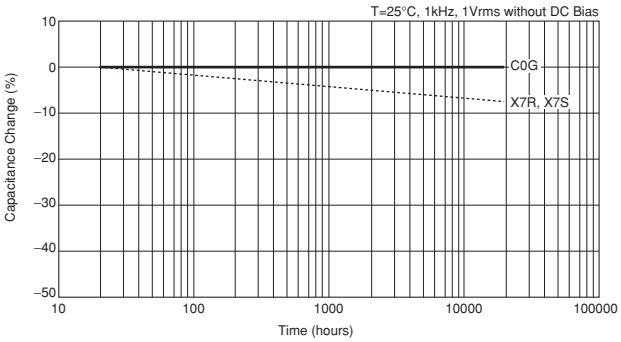


## ■ Impedance - Frequency Characteristics

### Temperature Compensating Type

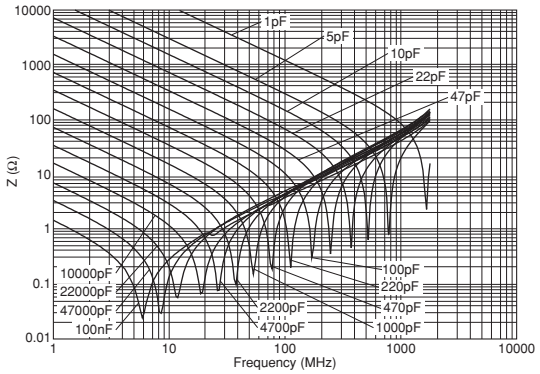


### High Dielectric Constant Type

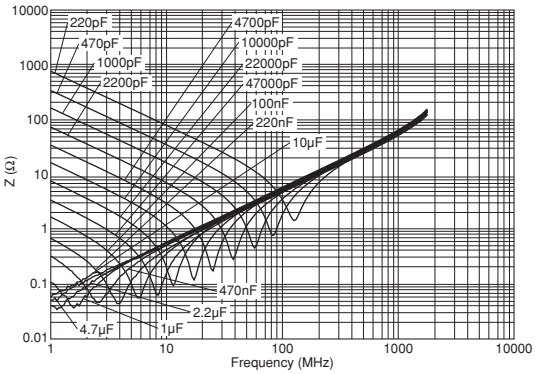

# RHE Series Characteristics Reference Data (Typical Example)

## ■ Capacitance - Temperature Characteristics

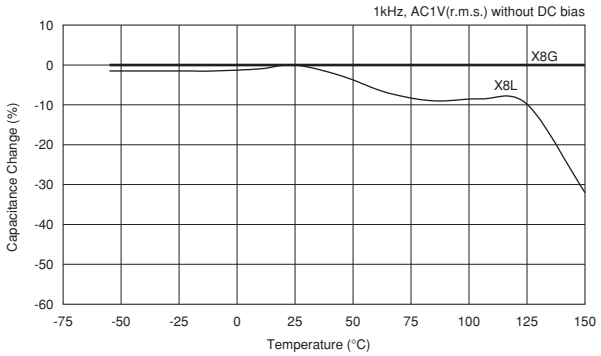


## ■ Capacitance - DC Voltage Characteristics

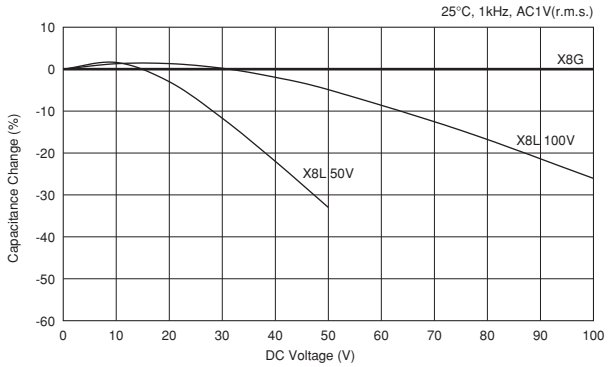


## ■ Capacitance Change - Aging

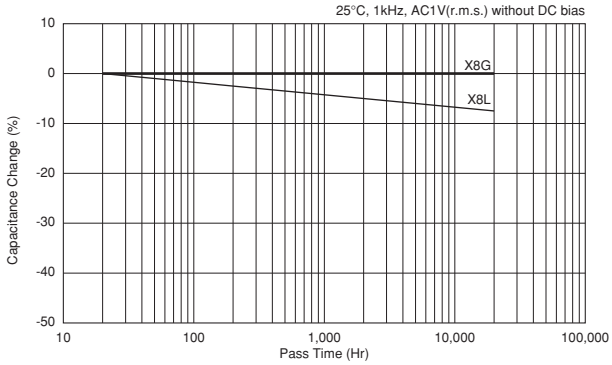


## ■ Impedance - Frequency Characteristics

### Temperature Compensating Type

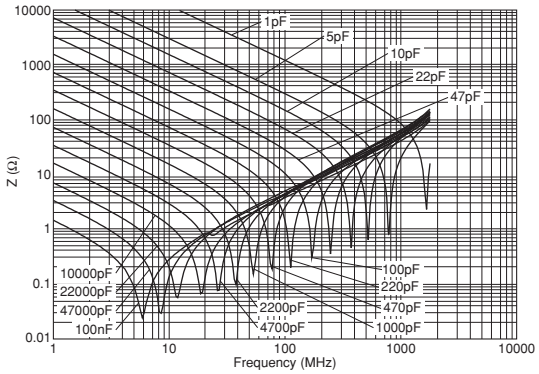


### High Dielectric Constant Type

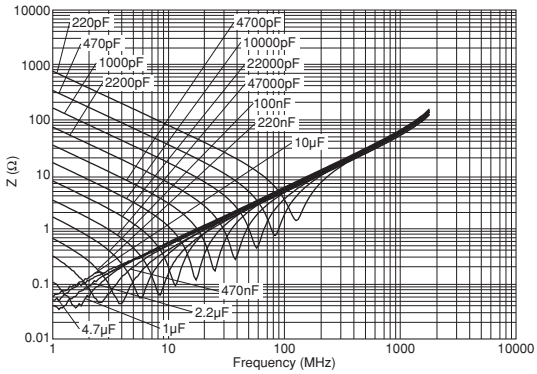

# RDE Series Characteristics Reference Data (Typical Example)

## ■ Capacitance - Temperature Characteristics

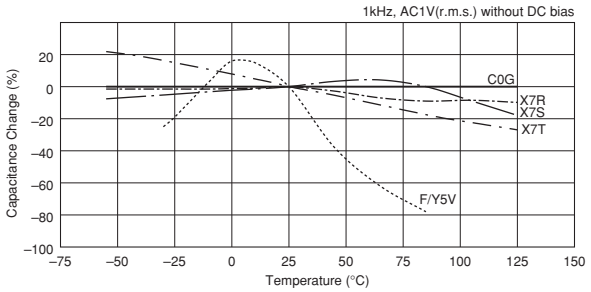


## ■ Capacitance - DC Voltage Characteristics

### Rated Voltage: DC25V to DC100V

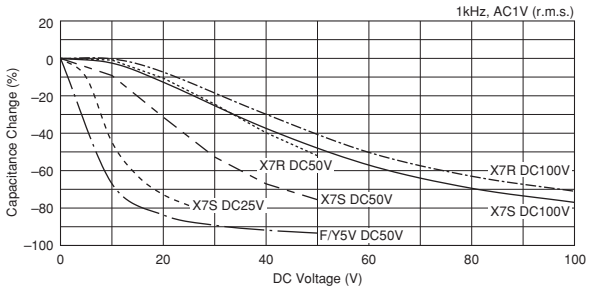


### Rated Voltage: DC250V to DC1kV

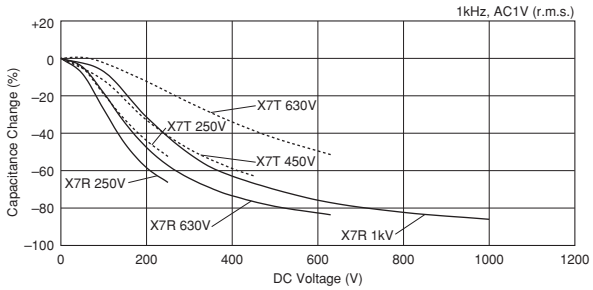


## ■ Capacitance Change - Aging

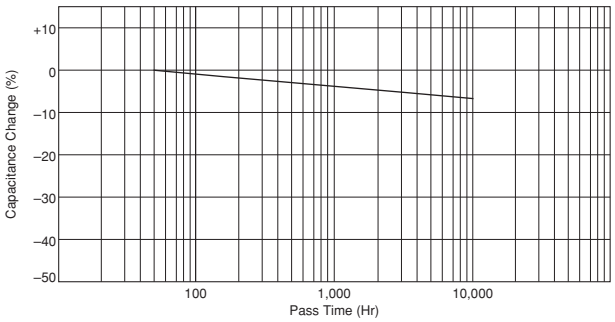


## ■ Impedance - Frequency Characteristics

### Temperature Compensating Type

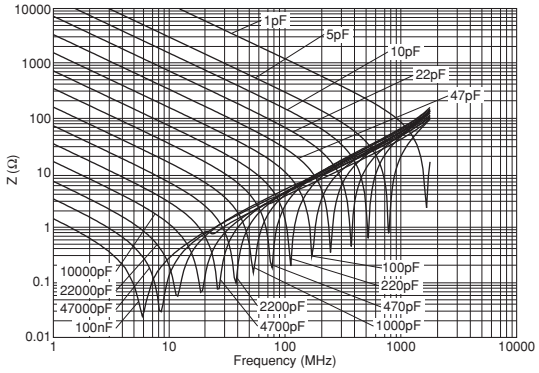


### High Dielectric Constant Type

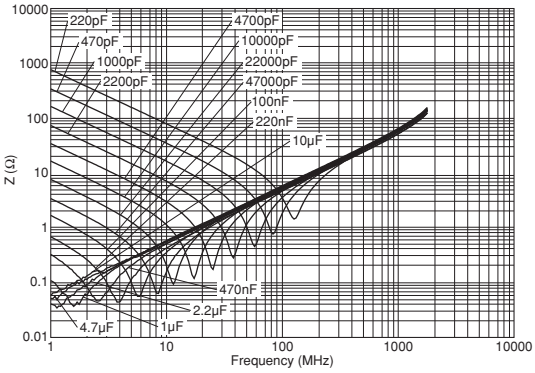

# Packaging

## ■ Packaging

Two types of packaging for monolithic ceramic capacitors are available.

### 1. Bulk Packaging

Minimum Quantity

| Dimensions Code | Dimensions (L×W) | Minimum Quantity (pcs./Bag) |
|---|---|---|
| 0 | 3.6×3.5mm or 4.0×3.5mm or 5.0×3.5mm (Depends on Part Number List) | 500 |
| 1 | 4.0×3.5mm or 4.5×3.5mm or 5.0×3.5mm (Depends on Part Number List) | |
| 2 | 5.5×4.0mm | |
| 3 | 5.5×5.0mm | |
| 4 | 7.5×5.5mm | |
| 5 | 7.5×7.5mm (DC630V: 7.5×8.0mm) | |
| W | 5.5×7.5mm or 6.0×8.0mm (Depends on Part Number List) | |
| U | 7.7×12.5mm (DC630V: 7.7×13.0mm) | 200 |

Please order with an integral multiple of the minimum quantity above.

### 2. Tape Carrier Packaging

(1) Dimensions of Ammo Pack

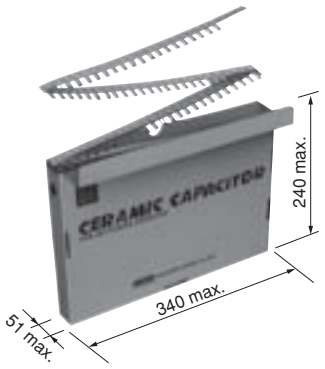


(in mm)

(2) Minimum Quantity

| Dimensions Code | Dimensions (L×W) | Minimum Quantity (pcs./Ammo Pack) |
|---|---|---|
| 0 | 4.0×3.5mm or 5.0×3.5mm (Depends on Part Number List) | 2000*1 |
| 1 | 4.0×3.5mm or 4.5×3.5mm or 5.0×3.5mm (Depends on Part Number List) | |
| 2 | 5.5×4.0mm | |
| 3 | 5.5×5.0mm | |
| 5 | 7.5×7.5mm (DC630V: 7.5×8.0mm) | 2000*2 |
| 6 | 10.0×10.0mm | 1500 |
| 8 | 7.5×5.5mm | |
| W | 5.5×7.5mm or 6.0×8.0mm (Depends on Part Number List) | |
| U | 7.7×12.5mm (DC630V: 7.7×13.0mm) | 1000*3 |

Please order with an integral multiple of the minimum quantity above.

*1 1500 pcs. for **RDER71H335K3□□C03A, RDEC71E226K3□□C03A, RDEC72A155K3□□C03A, RDEC72A225K3□□C03A**
(Two blank columns are filled with the lead style code.)

*2 1500 pcs. for **RDE** Series

*3 1500 pcs. for **RDED72W105MUE1H03A, RDER72E105MUE1H03A, RDER72J474MUE1K03A**

"Minimum Quantity" means the numbers of units of each delivery or order. The quantity should be an integral multiple of the "minimum quantity." (Please note that the actual delivery quantity in a package may change sometimes.)

Continued on the following page.

# Packaging

Continued from the preceding page.

## Taping Dimensions

### Inside Crimp Taping

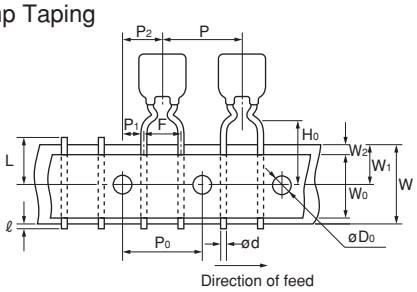


| Dimensions and Lead style code | Dimensions (L×W) |
|---|---|
| 0M1 | 3.6×3.5mm or 4.0×3.5mm |
| 1M1 | 4.0×3.5mm or 4.5×3.5mm (Depends on Part Number List) |
| 2M1 | 5.5×4.0mm |
| 2M2 | |
| 3M1 | 5.5×5.0mm |
| 3M2 | |
| 4M1 | 7.5×5.5mm |
| 4M2 | |
| WM1 | 5.5×7.5mm |

### Straight Taping

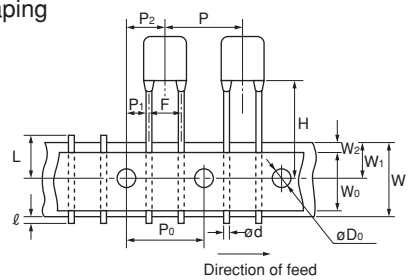


| Dimensions and Lead style code | Dimensions (L×W) |
|---|---|
| 0DB | 3.6×3.5mm |
| 1DB | 4.0×3.5mm |
| 2DB | 5.5×4.0mm |
| 3DB | 5.5×5.0mm |
| 5E1 | 7.5×7.5mm (DC630V, DC1kV: 7.5×8.0mm) |
| 5E2 | |
| UE1 | 7.7×12.5mm (DC630V, DC1kV: 7.7×13.0mm) |

### Outside Crimp Taping

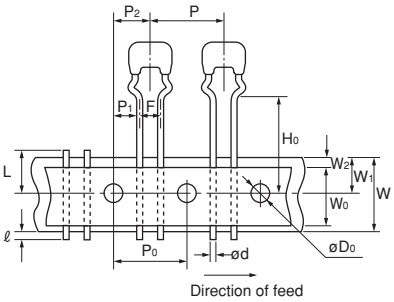


| Dimensions and Lead style code | Dimensions (L×W) |
|---|---|
| 0S1 | 5.0×3.5mm |
| 1S1 | |
| 2S1 | 5.5×4.0mm |
| 2S2 | |
| 3S1 | 5.5×5.0mm |
| 3S2 | |

| Item | Code | Dimensions (mm) |
|---|---|---|
| Pitch of Component | P | 12.7±1.0 |
| Pitch of Sprocket Hole | $P_0$ | 12.7±0.2 |
| Lead Spacing | F | $2.5^{+0.4}_{-0.2}$ (DB) (S1) (S2) |
| | | $5.0^{+0.6}_{-0.2}$ |
| Length from Hole Center to Component Center | $P_2$ | 6.35±1.3 |
| Length from Hole Center to Lead | $P_1$ | 3.85±0.7 |
| | | 5.1±0.7 (DB) (S1) (S2) |
| | | 254±1.5 Total length of components pitch X 20 |
| Body Dimension | | Depends on Part Number List |
| Deviation Along Tape, Left or Right Defect | ΔS | ±2.0 |
| Carrier Tape Width | W | 18.0±0.5 |
| Position of Sprocket Hole | $W_1$ | $9.0^{+0}_{-0.5}$ |
| Lead Distance between Reference and Bottom Plane | $H_0$ | 16.0±0.5 (M1) (S1) |
| | | 20.0±0.5 (M2) (S2) |
| For Straight Lead Type | H | 20±0.5 (E2), 17.5±0.5 (E1), 16±0.5 (DB) |
| Diameter of Sprocket Hole | $D_0$ | 4.0±0.1 |
| Lead Diameter | d | 0.5±0.05 |
| Total Tape Thickness | $t_1$ | 0.6±0.3 |
| Total Thickness of Tape and Lead Wire | $t_2$ | 1.5 max. |
| Body Thickness | T | Depends on Part Number List |
| Deviation Across Tape | Δh1 Δh2 | 1.0 max. (Dimensions code W, U: 2.0 max.) |
| Portion to Cut in Case of Defect | L | $11.0^{+0}_{-1.0}$ |
| Protrusion Length | ℓ | 0.5 max. |
| Hold Down Tape Width | $W_0$ | 9.5 min. |
| Hold Down Tape Position | $W_2$ | 1.5±1.5 |
| Coating Extension | | Depends on Dimensions |

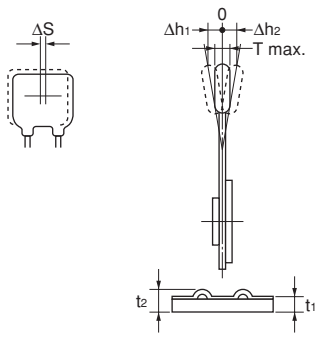

# ⚠Caution

## ■ ⚠Caution (Storage and Operating Condition)

Operating and storage environment

The insulating coating of capacitors does not form a perfect seal; therefore, do not use or store capacitors in a corrosive atmosphere, especially where chloride gas, sulfide gas, acid, alkali, salt or the like are present. Also avoid exposure to moisture. Before cleaning, bonding or molding this product, verify that these processes do not affect product quality by testing the performance of a cleaned, bonded or molded product in the intended equipment. Store the capacitors where the temperature and relative humidity do not exceed 5 to 40 degrees centigrade and 20 to 70%.
Use capacitors within 6 months after delivery.

FAILURE TO FOLLOW THE ABOVE CAUTIONS MAY RESULT, WORST CASE, IN A SHORT CIRCUIT AND CAUSE FUMING OR PARTIAL DISPERSION WHEN THE PRODUCT IS USED.

## ■ ⚠Caution (Rating)

**1. Operating Voltage**

When DC-rated capacitors are to be used in AC or ripple current circuits, be sure to maintain the Vp-p value of the applied voltage or the V0-p which contains DC bias within the rated voltage range.
When the voltage is applied to the circuit, starting or stopping may generate irregular voltage for a transit period because of resonance or switching. Be sure to use a capacitor with a rated voltage range that includes these irregular voltages.

When DC-rated capacitors are to be used in input circuits from commercial power source (AC filter), be sure to use Safety Recognized Capacitors because various regulations on withstand voltage or impulse withstand established for all equipment should be taken into consideration.

| Voltage | DC Voltage | DC+AC Voltage | AC Voltage | Pulse Voltage (1) | Pulse Voltage (2) |
|---|---|---|---|---|---|
| Positional Measurement | 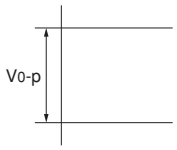  | 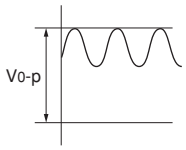  | 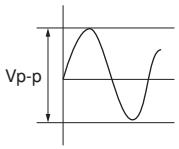  | 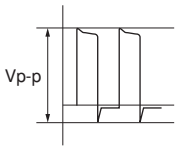  | 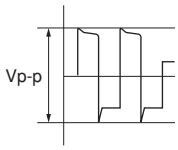  |

**2. Operating Temperature and Self-generated Heat**

Keep the surface temperature of a capacitor below the upper limit of its rated operating temperature range. Be sure to take into account the heat generated by the capacitor itself. When the capacitor is used in a high-frequency current, pulse current or similar current, it may have self-generated heat due to dielectric loss. In the case of "High Dielectric Constant Type Capacitors," applied voltage load should be such that self-generated heat is within 20 °C under the condition where the capacitor is subjected at an atmosphere temperature of 25 °C. Please contact us if self-generated heat occurs with "Temperature Compensating Type Capacitors".
When measuring, use a thermocouple of small thermal capacity -K of ø0.1mm under conditions where the capacitor is not affected by radiant heat from other components or wind from surroundings. Excessive heat may lead to deterioration of the capacitor's characteristics and reliability. Never attempt to perform measurement with the cooling fan running. Otherwise, accurate measurement cannot be ensured.

**3. Fail-Safe**

Be sure to provide an appropriate fail-safe function on your product to prevent a second damage that may be caused by the abnormal function or the failure of our product.

FAILURE TO FOLLOW THE ABOVE CAUTIONS MAY RESULT, WORST CASE, IN A SHORT CIRCUIT AND CAUSE FUMING OR PARTIAL DISPERSION WHEN THE PRODUCT IS USED.

## ■ ⚠Caution (Soldering and Mounting)

1. Vibration and impact
   Do not expose a capacitor or its leads to excessive shock or vibration during use.
2. Soldering
   When soldering this product to a PCB/PWB, do not exceed the solder heat resistance specification of the capacitor. Subjecting this product to excessive heating could melt the internal junction solder and may result in thermal shocks that can crack the ceramic element.
3. Bonding, resin molding and coating
   In case of bonding, molding or coating this product, verify that these processes do not affect the quality of the capacitor by testing the performance of the bonded, molded or coated product in the intended equipment.
   In case the amount of application, dryness/hardening conditions of adhesives and molding resins containing organic solvents (ethyl acetate, methyl ethyl ketone, toluene, etc.) are unsuitable, the outer coating resin of a capacitor may be damaged by the organic solvents and may result, worst case, in a short circuit.
   The variation in thickness of adhesive or molding resin or coating may cause an outer coating resin cracking and/or ceramic element cracking of a capacitor in a temperature cycling.
4. Treatment after bonding, resin molding and coating
   When the outer coating is hot (over 100 degrees centigrade) after soldering, it becomes soft and fragile, so please be careful not to give it mechanical stress.

FAILURE TO FOLLOW THE ABOVE CAUTIONS MAY RESULT, WORST CASE, IN A SHORT CIRCUIT AND CAUSE FUMING OR PARTIAL DISPERSION WHEN THE PRODUCT IS USED.

## ■ ⚠Caution (Handling)

Vibration and impact
Do not expose a capacitor or its leads to excessive shock or vibration during use.

FAILURE TO FOLLOW THE ABOVE CAUTIONS MAY RESULT, WORST CASE, IN A SHORT CIRCUIT AND CAUSE FUMING OR PARTIAL DISPERSION WHEN THE PRODUCT IS USED.

# Notice

## ■ Notice (Rating)

Capacitance change of capacitor

In case of F/X7R/X7S/X7T/X8L/Y5V char.

Capacitors have an aging characteristic, whereby the capacitor continually decreases its capacitance slightly if the capacitor is left on for a long time. Moreover, capacitance might change greatly depending on the surrounding temperature or an applied voltage.

## ■ Notice (Soldering and Mounting)

**1. Cleaning (ultrasonic cleaning)**

To perform ultrasonic cleaning, observe the following conditions.

Rinse bath capacity: Output of 20 watts per liter or less.

Rinsing time: 5 min. maximum.

Do not vibrate the PCB/PWB directly.

Excessive ultrasonic cleaning may lead to fatigue destruction of the lead wires.

**2. Soldering and Mounting**

(1) Allowable Conditions for Soldering Temperature and Time

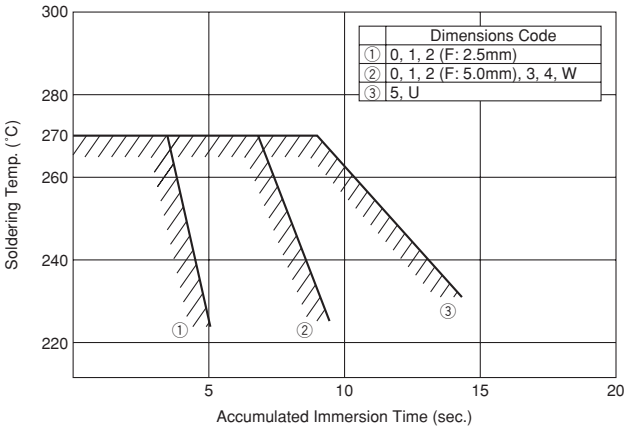


Perform soldering within tolerance range (shaded portion).

(2) Insertion of the Lead Wire

- When soldering, insert the lead wire into the PCB without mechanically stressing the lead wire.
- Insert the lead wire into the PCB with a distance appropriate to the lead space.

## ⚠Note:

1. Export Control
   <For customers outside Japan>
   No Murata products should be used or sold, through any channels, for use in the design, development, production, utilization, maintenance or operation of, or otherwise contribution to (1) any weapons (Weapons of Mass Destruction [nuclear, chemical or biological weapons or missiles] or conventional weapons) or (2) goods or systems specially designed or intended for military end-use or utilization by military end-users.
   <For customers in Japan>
   For products which are controlled items subject to the “Foreign Exchange and Foreign Trade Law” of Japan, the export license specified by the law is required for export.
2. Please contact our sales representatives or product engineers before using the products in this catalog for the applications listed below, which require especially high reliability for the prevention of defects which might directly damage a third party's life, body or property, or when one of our products is intended for use in applications other than those specified in this catalog.
   ① Aircraft equipment ② Aerospace equipment
   ③ Undersea equipment ④ Power plant equipment
   ⑤ Medical equipment ⑥ Transportation equipment (vehicles, trains, ships, etc.)
   ⑦ Traffic signal equipment ⑧ Disaster prevention / crime prevention equipment
   ⑨ Data-processing equipment ⑩ Application of similar complexity and/or reliability requirements to the applications listed above
3. Product specifications in this catalog are as of January 2014. They are subject to change or our products in it may be discontinued without advance notice.
   Please check with our sales representatives or product engineers before ordering. If there are any questions,please contact our sales representatives or product engineers.
4. Please read rating and ⚠CAUTION (for storage, operating, rating, soldering, mounting and handling) in this catalog to prevent smoking and/or burning, etc.
5. This catalog has only typical specifications.Therefore, please approve our product specifications or transact the approval sheet for product specifications before ordering.
6. Please note that unless otherwise specified, we shall assume no responsibility whatsoever for any conflict or dispute that may occur in connection with the effect of our and/or a third party's intellectual property rights and other related rights in consideration of your use of our products and/or information described or contained in our catalogs. In this connection, no representation shall be made to the effect that any third parties are authorized to use the rights mentioned above under licenses without our consent.
7. No ozone depleting substances (ODS) under the Montreal Protocol are used in our manufacturing process.

**Murata Manufacturing Co., Ltd.**

http://www.murata.com/

**Head Office**
1-10-1, Higashi Kotari, Nagaokakyo-shi, Kyoto 617-8555, Japan
Phone: 81-75-951-9111

**International Division**
3-29-12, Shibuya, Shibuya-ku, Tokyo 150-0002, Japan
Phone: 81-3-5469-6123 Fax: 81-3-5469-6155 E-mail: intl@murata.co.jp

Общество с ограниченной ответственностью «МосЧип» ИНН 7719860671 / КПП 771901001
Адрес: 105318, г.Москва, ул.Щербаковская д.3, офис 1107

**Данный компонент на территории Российской Федерации**

**Вы можете приобрести в компании MosChip.**

Для оперативного оформления запроса Вам необходимо перейти по данной ссылке:

http://moschip.ru/get-element

Вы можете разместить у нас заказ для любого Вашего проекта, будь то серийное производство или разработка единичного прибора.

В нашем ассортименте представлены ведущие мировые производители активных и пассивных электронных компонентов.

Нашей специализацией является поставка электронной компонентной базы двойного назначения, продукции таких производителей как XILINX, Intel (ex.ALTERA), Vicor, Microchip, Texas Instruments, Analog Devices, Mini-Circuits, Amphenol, Glenair.

Сотрудничество с глобальными дистрибьюторами электронных компонентов, предоставляет возможность заказывать и получать с международных складов практически любой перечень компонентов в оптимальные для Вас сроки.

На всех этапах разработки и производства наши партнеры могут получить квалифицированную поддержку опытных инженеров.

Система менеджмента качества компании отвечает требованиям в соответствии с ГОСТ Р ИСО 9001, ГОСТ РВ 0015-002 и ЭС РД 009

**Офис по работе с юридическими лицами:**

105318, г.Москва, ул.Щербаковская д.3, офис 1107, 1118, ДЦ «Щербаковский»

Телефон: +7 495 668-12-70 (многоканальный)

Факс: +7 495 668-12-70 (доб.304)

E-mail: info@moschip.ru

Skype отдела продаж:
moschip.ru
moschip.ru_4
moschip.ru_6
moschip.ru_9