THIS DRAWING IS UNPUBLISHED. RELEASED FOR PUBLICATION 2013
© COPYRIGHT 2013 BY TYCO ELECTRONICS CORPORATION. ALL RIGHTS RESERVED.

ATLANTIC VERSION TERMINATOR INTERFACE ADAPTER	PART NUMBER	REVISION	DESCRIPTION	FEED TYPE	APPLICATOR STYLE CONVERSION CHART: CONVERT TO	PART NUMBERS REQUIRED					
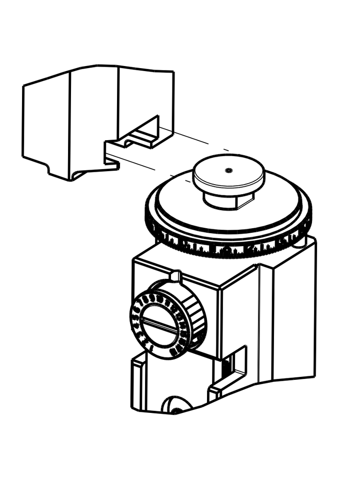	2150007-1	B	FINE CRIMP HEIGHT ADJUST	MECHANICAL	PNEUMATIC FEED	2119950-1	2119792-2	-	2119641-1	-	2063440-1
					SERVO LATCH PLATE	2119951-1	1901697-1	8-2150007-5	-	-	2168400-7 (QUANTITY 2)
					SMART APPLICATOR	2161326-1	-	8-2150007-4	-	-	-
	2150007-2	B	FINE CRIMP HEIGHT ADJUST	PNEUMATIC	MECHANICAL FEED	2119949-1	2063961-1	5-18022-5	2119653-1	-	-
					SERVO LATCH PLATE	2119951-1	1901697-1	8-2150007-5	-	-	2168400-7 (QUANTITY 2)
					SMART APPLICATOR	2161326-1	-	8-2150007-4	-	-	-
	2150007-5	B	FINE CRIMP HEIGHT ADJUST	SERVO LATCH PLATE △4	MECHANICAL FEED	2119949-1	2063961-1	5-18022-5	2119653-1	-	-
					PNEUMATIC FEED	2119950-1	2119792-2	-	2119641-1	-	2063440-1
	2150007-6	B	NON-CRIMP HEIGHT ADJUST	△4 SERVO LATCH PLATE △12	-	-	-	-	-	-	-
					-	-	-	-	-	-	-
	2150007-7	B	FINE CRIMP HEIGHT ADJUST	NONE	-	-	-	-	-	-	-
	7-2150007-7	A	CRIMP TOOLING KIT	-	-	-	-	-	-	-	-

SET UP GAUGE 2119599-2 | LOC A | DIST 66

REVISIONS						
P	LTR	DESCRIPTION	DATE	DWN	APVD
	B2	ECR-15-009075	16JUN2015	XZ	UG
	B3	ECR-16-003756	11MAR2016	XZ	LZ

APPLICATOR DATA		
CRIMP	SIZE	TYPE
WIRE	2.29 mm [.090]	F
INSUL	3.56 mm [.140]	F
APPLICATOR INSTRUCTIONS 408-10390		

TERMINAL DATA: TE TERMINAL		TE CRIMP SPECIFICATION	
TERMINAL NAME: .187 SERIES FASTON RECEPTACLE			
WIRE STRIP LENGTH 3.71-4.47 mm [.146-.176 IN]		INSULATION DIAMETER RANGE ∅2.29-3.30 mm [.090-.130 IN]	
TERMINAL APPLICATION SPECIFICATION	(A)114-2036	-	-
	(B)114-2065	-	-
TERMINALS APPLIED			
TE TERMINAL	TE TERMINAL	TE TERMINAL	TE TERMINAL
(A) 42452-1	(A) 60196-1	(A) 61939-1	(A) 63751-1
(A) 42452-2	(A) 60196-2	(A) 62137-1	(A) 63654-1
(A) 42452-5	(A) 60196-5	(A) 62137-2	(A) 63850-1
(A) 1742841-1	(A) 60196-8	(A) 62865-1	(A) 63959-1
(A) 1742883-1	(A) 60214-1	(A) 63475-1	(A) 63970-1
(A) 42453-2	(A) 60214-2	(A) 63475-2	(A) 150666-1
(A) 42617-1	(A) 60214-3	(A) 63477-1	(A) 1-150681-1
(A) 42617-2	(A) 60621-1	(A) 63477-2	(A) 151322-1
(A) 42617-7	(A) 61084-1	(A) 63477-6	(A) 151923-1
(A) 42801-1	(A) 61758-1	(A) 154936-1	(A) 152357-1
(A) 42801-2	(A) 61758-2	(A) 63556-2	(A) 154514-1
(A) 42801-5	(B) 61919-1	(A) 63608-2	(A) 63751-2

WIRE SIZE	CRIMP HEIGHT mm [INCH]	CRIMP HEIGHT △9 REFERENCE SETTING
1.50mm2	1.60+/-0.05 [.063+/-.002]	2.6
16 AWG	1.52+/-0.05 [.060+/-.002]	3.2
1.25mm2	1.50+/-0.05 [.059+/-.002]	3.4
1.00mm2	1.42+/-0.05 [.056+/-.002]	4.0
18 AWG	1.35+/-0.05 [.053+/-.002]	5.0
0.75mm2	1.32+/-0.05 [.052+/-.002]	5.3
20 AWG	1.24+/-0.05 [.049+/-.002]	6.1
0.50mm2	1.22+/-0.05 [.048+/-.002]	6.3

TERMINAL DATA: TE TERMINAL		TE CRIMP SPECIFICATION	
TERMINAL NAME: .187 SERIES FASTON RECEPTACLE			
WIRE STRIP LENGTH 3.71-4.47 mm [.146-.176 IN]		INSULATION DIAMETER RANGE ∅2.29-3.30 mm [.090-.130 IN]	
TERMINAL APPLICATION SPECIFICATION	-	-	-
	(C)114-5084	-	-
TERMINALS APPLIED			
TE TERMINAL	TE TERMINAL	TE TERMINAL	TE TERMINAL
170037-1	170037-2	170037-3	170037-4
170037-5	170037-6	170037-9	

WIRE SIZE	CRIMP HEIGHT mm [INCH]	CRIMP HEIGHT △9 REFERENCE SETTING
1.25mm2	1.42+/-0.05 [.056+/-.002]	4.0
0.75mm2	1.24+/-0.05 [.049+/-.002]	6.1
0.50mm2	1.14+/-0.05 [.045+/-.002]	7.3

△1 RECOMMENDED SPARE PARTS

△2 GREASE BEARING SURFACES LIGHTLY

3. LUBRICATE DAILY PER THE APPLICATOR INSTRUCTION SHEET SUPPLIED WITH THE APPLICATOR.

△4 APPLICATOR SPECIFIC DATA TO BE ENTERED INTO BLANK MEMORY CHIP AT ASSEMBLY. SEE BELOW FOR PART NUMBER:
MECHANICAL FEED WITH "SMART APPLICATOR" CONVERSION: 8-2150007-4
PNEUMATIC FEED WITH "SMART APPLICATOR" CONVERSION: 8-2150007-4
SERVO FEED WITH "FINE CRIMP HEIGHT ADJUST": 8-2150007-5
SERVO FEED WITH "NON-CRIMP HEIGHT ADJUST": 8-2150007-6

5. ADJUSTMENT OF THE STRIPPER MAY BE REQUIRED WHEN MOVING THE APPLICATOR BETWEEN BENCH AND LEADMAKER APPLICATIONS.

△6 APPLY PART NUMBER 1-23419-5 LOCTITE TO THREADS OF ITEMS 62.
APPLY PART NUMBER 2-23419-6 LOCTITE TO THREADS OF ITEMS 242.
FOR -6 ONLY APPLY PART NUMBER 1-23419-5 LOCTITE TO THREADS OF ITEM 37.

△7 GREASE THREADS, GROOVE AND O-RING ON ITEMS 35 & 252.

△8 MAGNET, ITEM 166 MUST BE ORIENTED CORRECTLY IN ORDER TO PROPERLY ACTUATE THE COUNTER.

△9 CRIMP HEIGHT REFERENCE SETTING WAS THE SETTING USED WHEN THE APPLICATOR WAS QUALIFIED AT THE FACTORY. ADJUSTMENT MAY BE NECESSARY WHEN RUNNING APPLICATOR IN THE FIELD.

△10 SPARE FEED CAM STORAGE LOCATION REFER TO INSTRUCTION SHEET FOR ADDITIONAL INFORMATION.

△11 THE RECOMMENDED SET-UP FOR END FEED APPLICATORS IS POST-FEED WITH ITEM 2119653-1. THE APPLICATOR CAN BE CONFIGURED FOR PRE-FEED WITH ITEM 2119652-1 BUT MAY ENCOUNTER PROBLEMS WITH SOME APPLICATIONS. FEED ISSUES OR TERMINAL JAMMING MAY OCCUR IN THE PRE-FEED CONFIGURATION.

△12 WHEN ASSEMBLING -6 NON-CRIMP HEIGHT ADJUST APPLICATOR USE SHIM PACK 2119957-2 TO ALIGN APPLICATOR'S MAXIMUM WIRE CRIMP HEIGHT AT NORMAL TERMINATOR SHUT HEIGHT

△13 INSULATION RANGE FOR TERMINAL 62137 ONLY IS 1.52 - 2.79 mm [.060 - .110 IN]

△14 WITH THE EXCEPTION OF TERMINAL 62137, THE MIN INSULATION DIAMETER THAT CAN BE APPLIED SUCCESSFULLY IS 1.70 mm [.067 IN]

△15 CERTAIN TERMINALS REQUIRE LUBRICATION REFER TO THE APPLICATOR INSTRUCTION SHEET FOR MORE INFORMATION.

△16 CUT TO LENGTH AT ASSEMBLY

*WARNING
ON INSTALLATION, SET WIRE DISC, ITEM 40 TO LARGEST WIRE SIZE SETTING. USE OF SETTINGS BELOW MINIMUM REQUIRED CRIMP HEIGHT SETTING WILL CAUSE DAMAGE TO CRIMP TOOLING.

-77	-7	-6	-5	-2	-1	PART NO	DESCRIPTION	ITEM NO
-	-	1	-	-	-	2119957-2	APPLICATOR SHIM PACK	260
-	1	-	1	1	1	8-21084-0	O-RING, .676 ID, .070 DIA. MAT.	252

NOTE	-77	-7	-6	-5	-2	-1	PART NO	DESCRIPTION	ITEM NO
	-	-	-	-	1	-	2119640-1	PUSH ROD, AIR FEED	250
	-	-	-	-	1	-	2079988-1	BUSHING, LCH5-12, MISUMI	249
	-	-	-	-	1	-	2119641-1	FEED CAM, AIR FEED	248
	-	1	-	1	1	1	2119798-1	DETENT PIN	247
	-	1	-	1	1	1	1-22279-3	SPRING, COMPRESSION	246
	-	-	1	-	-	-	2119759-1	RAM, AMP STYLE, END FEED, NON-ADJUST	245
	-	1	1	1	1	1	2119082-9	CAM, SNAIL, INSULATION ADJUSTMENT	244
	-	1	1	1	1	1	2079764-1	WASHER, WAVE SPRING, CREST-TO-CREST	243
△6	-	1	1	1	1	1	2119083-1	RETAINER, INSULATION DIAL	242
	-	-	2	2	-	-	2168400-7	SHCS, LOW HEAD, RoHS, M5 X 10	240
	-	-	-	-	-	1	2119580-1	MECHANICAL FEED ASSEMBLY	239
	-	-	-	-	1	-	2063440-1	AIR FEED MODULE	238
	-	-	1	1	-	-	2119740-2	TAG,IDENTIFICATION	213
	-	-	REF	REF	-	-	1901697-1	FEED FINGER ASSEMBLY,EF	183
	-	-	-	-	2	-	21045-3	RING, RETAIN, EXTERN, 3/16 CRESCENT	172
	-	1	1	1	1	1	994969-1	MAGNET, RARE EARTH HIGH ENERGY	166
	-	REF	REF	REF	REF	REF	994970-2	COUNTER, MAGNETIC	164
	-	-	-	-	1	-	240638-1	SPRING, FEED FINGER	163
	-	-	-	-	1	-	3-23627-7	PIN, RETAIN, GRVD, 3/16 X .854	137
△4	-	-	REF	REF	-	-	SEE NOTE 4	MEMORY CHIP, PROGRAMMED	135
	-	-	1	1	-	-	1633743-1	SERVO FEED LATCH ASM	133
△15	-	REF	REF	REF	REF	REF	2119955-2	ASSY, LUBRICATOR, END FEED	84
	-	1	1	1	1	1	455888-5	SPACER, CRIMPER	82
	-	1	1	1	1	1	2119791-9	DEPRESSOR, WIRE	73
	-	1	1	1	1	1	2119956-2	DOCUMENTATION PACKAGE	71
	-	2	2	2	2	2	2-18032-2	SCR, SET, FLT POINT M3 X 10.0	70
	-	1	-	-	1	1	2119740-1	TAG,IDENTIFICATION	67
	-	2	2	2	2	2	2168078-1	SCREW, DRIVE, RH, RoHS, 2 x .188	66
	-	2	2	2	2	2	2168400-5	SHCS, LOW HEAD, RoHS, M4 X 20	64
	-	1	-	1	1	1	2119793-1	LIMITER, ADJUSTMENT BOLT	63
△6	-	3	-	3	3	3	992763-5	SCR, SET, SOC, CONE POINT, M3 x 4.0	62
	-	1	1	1	1	1	2079383-4	SCR, BHSC, RoHS (M4 X 8)	60
	-	-	-	-	-	1	5-18022-5	SCR, HEX HD CAP, M4 X 6.0	59
	-	-	-	-	-	1	2063961-1	FEED FINGER	58
	-	3	3	3	3	3	2168400-4	SHCS, LOW HEAD, RoHS, M4 X 8	57
△16	-	2	2	2	2	2	1-2168083-0	SCR, SKT HD CAP, RoHS, M4 X 10	56
	-	2	2	2	2	2	5018030-2	NUT, HEX, REG, RoHS, M4	55
	-	2	2	2	2	2	5018030-1	NUT, HEX, REG, RoHS, M3	54
	-	2	2	2	2	2	986965-8	NUT, LOCK, HEX, TORQUE (M4)	53
	-	-	-	-	1	-	2119792-2	PAWL, EF, AIR	51
	-	-	-	-	1	2	18023-9	SCR, SKT HD CAP M4 X 6.0	49
	-	-	-	-	-	1	2119652-1	FEED CAM, PRE FEED	48
	-	-	-	-	-	1	2119653-1	FEED CAM, POST FEED	47
	-	1	1	1	1	1	2119655-5	APPLICATOR BASIC ASSEMBLY, EF	46
	-	1	-	1	1	1	2119369-1	RAM,AMP STYLE, END FEED	44
	-	1	1	1	1	1	2079383-7	SCR, BHSC, RoHS (M8 X 25)	41
	-	1	-	1	1	1	2119645-1	DISC, NUMBERED FA WIRE ADJUSTMENT	40
	-	1	-	1	1	1	2119957-1	APPLICATOR SHIM PACK	39
	-	1	1	1	1	1	2119644-1	RAM WASHER, PRECISION	38
△6	-	1	1	1	1	1	2119085-1	FA HEAD, ATLANTIC STYLE	37
	-	1	-	1	1	1	2119092-1	BOLT, ADJUSTMENT	35
	-	7	7	7	7	7	1-18028-2	WASHER, FLAT, REG M4	33
	-	2	2	2	2	2	2168083-9	SCR, SKT HD CAP, RoHS, M4 X 20	31
	-	2	2	2	2	2	1-2168083-0	SCR, SKT HD CAP, RoHS, M4 X 10	29
	-	1	1	1	1	1	240639-1	STRIPPER (MACHINING)	27
	-	2	2	2	2	2	1320906-1	STUD, THREADED	25
	-	1	1	1	1	1	1-1752371-2	PLATE, STRIP GUIDE	24
	-	1	1	1	1	1	240825-1	PLATE, STRIP HOLD DOWN	23
	-	2	2	2	2	2	2-22281-3	SPRING, COMPRESSION	22
	-	1	1	1	1	1	1752373-4	DRAG	20
	-	2	2	2	2	2	1901259-5	GUIDE, LOWER STRIP	18
	-	4	4	4	4	4	1-2079383-1	SCR, BHSC, RoHS (M6 X 12)	17
	-	1	1	1	1	1	6-240641-3	SPACER	16
△1	-	1	1	1	1	1	240644-5	PLATE, REAR SHEAR	11
	-	-	-	-	-	-	-	-	10
△1	-	1	1	1	1	1	4-690495-3	PLATE, FRONT SHEAR	9
△1	1	1	1	1	1	1	1333217-6	ANVIL, EF .090	8
△1	-	1	1	1	1	1	690474-8	BLADE, SLUG	7
	-	1	1	1	1	1	4-240641-2	SPACER	5
	-	1	1	1	1	1	238009-1	BLOCK, FL CRIMPER SPACER	4
△1	1	1	1	1	1	1	2-1633961-3	CRIMPER, INSULATION F PREMIUM	3
	-	-	-	-	-	-	-	-	2
△1	1	1	1	1	1	1	4-456406-7	CRIMPER, WIRE PREMIUM	1

ATLANTIC VERSION
Shown on sheets 1 of 4 & 2 of 4
(Pacific version shown on sheets 3 of 4 & 4 of 4)

THIS DRAWING IS A CONTROLLED DOCUMENT FOR TYCO ELECTRONICS CORPORATION IT IS SUBJECT TO CHANGE AND THE CONTROLLING ENGINEERING ORGANIZATION SHOULD BE CONTACTED FOR THE LATEST REVISION.

DIMENSIONS: mm
TOLERANCES UNLESS OTHERWISE SPECIFIED: 0 PLC ±- 1 PLC ±- 2 PLC ±- 3 PLC ±- 4 PLC ±- ANGLES ±-
MATERIAL - - | FINISH - -
DWN B. WEAVER 16NOV2011 | CHK G. BAILEY 16NOV2011 | APVD G. BAILEY 16NOV2011
PRODUCT SPEC - | APPLICATION SPEC - | WEIGHT -
TE Connectivity Harrisburg, PA 17105-3608
NAME: Ocean End Feed Applicator -
SIZE A1 | CAGE CODE 00779 | DRAWING NO C-2150007 | RESTRICTED TO -
Customer Accessible Production Drawing | SCALE 1:1 | SHEET 1 OF 4 | REV B3

AMP 4805 REV 31MAR2000

SHEETS 3 & 4 ARE NOT REQUIRED FOR ATLANTIC VERSION

THIS DRAWING IS UNPUBLISHED. RELEASED FOR PUBLICATION 2013
© COPYRIGHT 2013 BY TYCO ELECTRONICS CORPORATION. ALL RIGHTS RESERVED.

LOC	DIST
A	66

REVISIONS

P	LTR	DESCRIPTION	DATE	DWN	APVD
	-	SEE SHEET 1	-	-	-

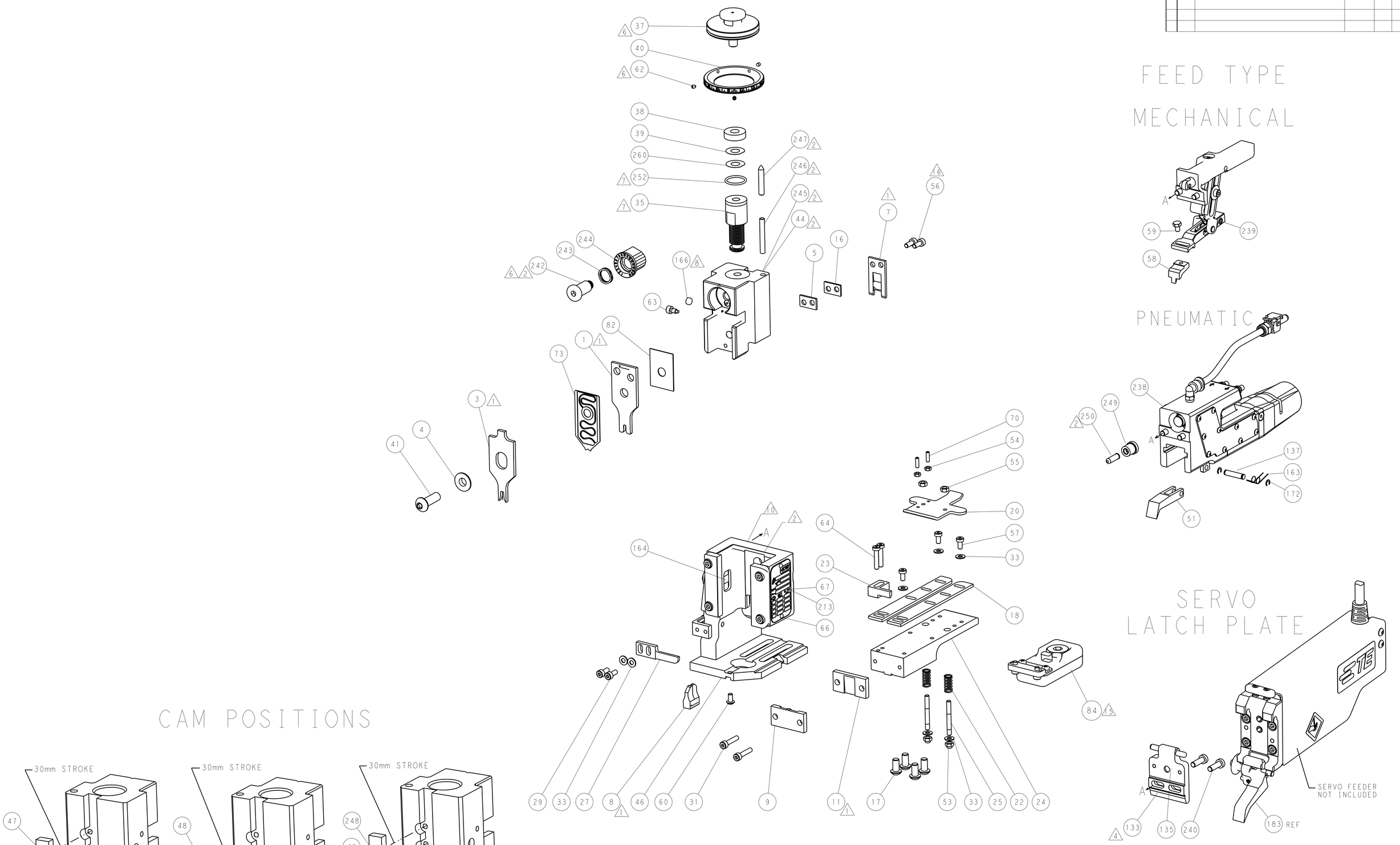

ATLANTIC VERSION

Shown on sheets 1 of 4 & 2 of 4
(Pacific version shown on sheets 3 of 4 & 4 of 4)

THIS DRAWING IS A CONTROLLED DOCUMENT FOR TYCO ELECTRONICS CORPORATION. IT IS SUBJECT TO CHANGE AND TO CONTROLLING ENGINEERING ORGANIZATION SHOULD BE CONTACTED FOR THE LATEST REVISION.

DWN	B. WEAVER	16NOV2011
CHK	G. BAILEY	16NOV2011
APVD	G. BAILEY	16NOV2011

TE Connectivity
Harrisburg, PA 17105-3608

DIMENSIONS: mm

TOLERANCES UNLESS OTHERWISE SPECIFIED:
0 PLC ±-
1 PLC ±-
2 PLC ±-
3 PLC ±-
4 PLC ±-
ANGLES ±-

MATERIAL - -
FINISH - -

PRODUCT SPEC -
APPLICATION SPEC -
WEIGHT -

NAME: Ocean End Feed Applicator -

SIZE	CAGE CODE	DRAWING NO	RESTRICTED TO
A1	00779	C-2150007	-

Customer Accessible Production Drawing | SCALE 1:1 | SHEET 2 OF 4 | REV B3

AMP 4805 REV 31MAR2000

SHEETS 3 & 4 ARE NOT REQUIRED FOR ATLANTIC VERSION

THIS DRAWING IS UNPUBLISHED. RELEASED FOR PUBLICATION 2013
© COPYRIGHT 2013 BY TYCO ELECTRONICS CORPORATION. ALL RIGHTS RESERVED.

SET UP GAUGE 2119599-2	LOC A	DIST 66

REVISIONS					
P	LTR	DESCRIPTION	DATE	DWN	APVD
	-	SEE SHEET 1	-	-	-

PACIFIC VERSION TERMINATOR INTERFACE ADAPTER	PART NUMBER	REVISION	DESCRIPTION	FEED TYPE
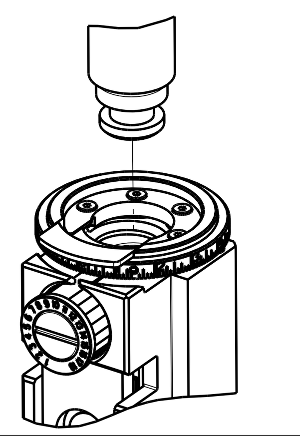	2-2150007-1	B	FINE CRIMP HEIGHT ADJUST	MECHANICAL
	2-2150007-2	B	FINE CRIMP HEIGHT ADJUST	PNEUMATIC
	2-2150007-5	B	FINE CRIMP HEIGHT ADJUST	SERVO LATCH PLATE (4)
	2-2150007-7	B	FINE CRIMP HEIGHT ADJUST	NONE
	7-2150007-7	A	CRIMP TOOLING KIT	-

APPLICATOR STYLE CONVERSION CHART

CONVERT TO	PART NUMBERS REQUIRED					
PNEUMATIC FEED	2119950-1	2119792-2	-	2119641-2	-	2063440-1
SERVO LATCH PLATE	2119951-1	1901697-1	8-2150007-5	-	-	2168400-7 (QUANTITY 2)
SMART APPLICATOR	2161326-1	-	8-2150007-4	-	-	-
MECHANICAL FEED	2119949-1	2063961-1	5-18022-5	2119653-2	-	-
SERVO LATCH PLATE	2119951-1	1901697-1	8-2150007-5	-	-	2168400-7 (QUANTITY 2)
SMART APPLICATOR	2161326-1	-	8-2150007-4	-	-	-
MECHANICAL FEED	2119949-1	2063961-1	5-18022-5	2119653-2	-	-
PNEUMATIC FEED	2119950-1	2119792-2	-	2119641-2	-	2063440-1
-	-	-	-	-	-	-
-	-	-	-	-	-	-

APPLICATOR DATA

CRIMP	SIZE	TYPE
WIRE	2.29 mm [.090]	F
INSUL	3.56 mm [.140]	F

APPLICATOR INSTRUCTIONS 408-10390

TERMINAL DATA: TE TERMINAL		TE CRIMP SPECIFICATION	
TERMINAL NAME: .187 SERIES FASTON RECEPTACLE			
WIRE STRIP LENGTH 3.71-4.47 mm [.146-.176 IN]		INSULATION DIAMETER RANGE ∅2.29-3.30 mm [.090-.130 IN]	
TERMINAL APPLICATION SPECIFICATION	(A)114-2036	-	-
	(B)114-2065	-	-

TERMINALS APPLIED

TE TERMINAL	TE TERMINAL	TE TERMINAL	TE TERMINAL
(A) 42452-1	(A) 60196-1	(A) 61939-1	(A) 63751-1
(A) 42452-2	(A) 60196-2	(A) 62137-1	(A) 63654-1
(A) 42452-5	(A) 60196-5	(A) 62137-2	(A) 63850-1
(A) 1742841-1	(A) 60196-8	(A) 62865-1	(A) 63959-1
(A) 1742883-1	(A) 60214-1	(A) 63475-1	(A) 63970-1
(A) 42453-2	(A) 60214-2	(A) 63475-2	(A) 150666-1
(A) 42617-1	(A) 60214-3	(A) 63477-1	(A) 1-150681-1
(A) 42617-2	(A) 60621-1	(A) 63477-2	(A) 151322-1
(A) 42617-7	(A) 61084-1	(A) 63477-6	(A) 151923-1
(A) 42801-1	(A) 61758-1	(A) 154936-1	(A) 152357-1
(A) 42801-2	(A) 61758-2	(A) 63556-2	(A) 154514-1
(A) 42801-5	(B) 61919-1	(A) 63608-2	(A) 63751-2

WIRE SIZE	CRIMP HEIGHT mm [INCH]	CRIMP HEIGHT (9) REFERENCE SETTING
1.50mm2	1.60+/-0.05 [.063+/-.002]	2.6
16 AWG	1.52+/-0.05 [.060+/-.002]	3.2
1.25mm2	1.50+/-0.05 [.059+/-.002]	3.4
1.00mm2	1.42+/-0.05 [.056+/-.002]	4.0
18 AWG	1.35+/-0.05 [.053+/-.002]	5.0
0.75mm2	1.32+/-0.05 [.052+/-.002]	5.3
20 AWG	1.24+/-0.05 [.049+/-.002]	6.1
0.50mm2	1.22+/-0.05 [.048+/-.002]	6.3

TERMINAL DATA: TE TERMINAL		TE CRIMP SPECIFICATION	
TERMINAL NAME: .187 SERIES FASTON RECEPTACLE			
WIRE STRIP LENGTH 3.71-4.47 mm [.146-.176 IN]		INSULATION DIAMETER RANGE ∅2.29-3.30 mm [.090-.130 IN]	
TERMINAL APPLICATION SPECIFICATION	-	-	-
	(C)114-5084	-	-

TERMINALS APPLIED

TE TERMINAL	TE TERMINAL	TE TERMINAL	TE TERMINAL
170037-1	170037-2	170037-3	170037-4
170037-5	170037-6	170037-9	

WIRE SIZE	CRIMP HEIGHT mm [INCH]	CRIMP HEIGHT (9) REFERENCE SETTING
1.25mm2	1.42+/-0.05 [.056+/-.002]	4.0
0.75mm2	1.24+/-0.05 [.049+/-.002]	6.1
0.50mm2	1.14+/-0.05 [.045+/-.002]	7.3

(1) RECOMMENDED SPARE PARTS

(2) GREASE BEARING SURFACES LIGHTLY

3. LUBRICATE DAILY PER THE APPLICATOR INSTRUCTION SHEET SUPPLIED WITH THE APPLICATOR.

(4) APPLICATOR SPECIFIC DATA TO BE ENTERED INTO BLANK MEMORY CHIP AT ASSEMBLY. SEE BELOW FOR PART NUMBER:
MECHANICAL FEED WITH "SMART APPLICATOR" CONVERSION: 8-2150007-4
PNEUMATIC FEED WITH "SMART APPLICATOR" CONVERSION: 8-2150007-4
SERVO FEED WITH "FINE CRIMP HEIGHT ADJUST": 8-2150007-5

5. ADJUSTMENT OF THE STRIPPER MAY BE REQUIRED WHEN MOVING THE APPLICATOR BETWEEN BENCH AND LEADMAKER APPLICATIONS.

(6) APPLY PART NUMBER 1-23419-5 LOCTITE TO THREADS OF ITEMS 62. APPLY PART NUMBER 2-23419-6 LOCTITE TO THREADS OF ITEMS 242.

(7) GREASE THREADS, GROOVE AND O-RING ON ITEMS 139 & 153.

(8) MAGNET, ITEM 166 MUST BE ORIENTED CORRECTLY IN ORDER TO PROPERLY ACTUATE THE COUNTER.

(9) CRIMP HEIGHT REFERENCE SETTING WAS THE SETTING USED WHEN THE APPLICATOR WAS QUALIFIED AT THE FACTORY. ADJUSTMENT MAY BE NECESSARY WHEN RUNNING APPLICATOR IN THE FIELD.

(10) SPARE FEED CAM STORAGE LOCATION REFER TO INSTRUCTION SHEET FOR ADDITIONAL INFORMATION.

(11) THE RECOMMENDED SET-UP FOR END FEED APPLICATORS IS POST-FEED WITH ITEM 2119653-1. THE APPLICATOR CAN BE CONFIGURED FOR PRE-FEED WITH ITEM 2119652-1 BUT MAY ENCOUNTER PROBLEMS WITH SOME APPLICATIONS. FEED ISSUES OR TERMINAL JAMMING MAY OCCUR IN THE PRE-FEED CONFIGURATION.

(12) INSULATION RANGE FOR TERMINAL 62137 ONLY IS 1.52-2.79 mm [.060-.110 IN]

(13) WITH THE EXCEPTION OF TERMINAL 62137, THE MIN INSULATION DIAMETER THAT CAN BE APPLIED SUCCESSFULLY IS 1.70 mm [.067 IN]

(14) CERTAIN TERMINALS REQUIRE LUBRICATION REFER TO THE APPLICATOR INSTRUCTION SHEET FOR MORE INFORMATION.

(15) CUT TO LENGTH AT ASSEMBLY

*WARNING
ON INSTALLATION, SET WIRE DISC, ITEM 40 TO LARGEST WIRE SIZE SETTING. USE OF SETTINGS BELOW MINIMUM REQUIRED CRIMP HEIGHT SETTING WILL CAUSE DAMAGE TO CRIMP TOOLING.

NOTE	-77	-27	-25	-22	-21	PART NO	DESCRIPTION	ITEM NO
	-	1	1	1	1	2119782-1	FINE ADJUST HEAD ASM, PACIFIC STYLE	251
	-	-	-	1	-	2119640-1	PUSH ROD, AIR FEED	250
	-	-	-	1	-	2079988-1	BUSHING, LCH5-12, MISUMI	249
	-	1	1	1	1	1-22279-3	SPRING, COMPRESSION	246
	-	1	1	1	1	2119082-9	CAM, SNAIL, INSULATION ADJUSTMENT	244
	-	1	1	1	1	2079764-1	WASHER, WAVE SPRING, CREST-TO-CREST	243
(6)	-	1	1	1	1	2119083-1	RETAINER, INSULATION DIAL	242
	-	-	2	-	-	2168400-7	SHCS, LOW HEAD, RoHS, M5 X 10	240
	-	-	-	-	1	2119580-1	MECHANICAL FEED ASSEMBLY	239
	-	-	-	1	-	2063440-1	AIR FEED MODULE	238
	-	-	1	-	-	2119740-2	TAG,IDENTIFICATION	213
	-	4	4	4	4	2079383-9	SCR, BHSC, RoHS (M6 X 20)	186
	-	-	REF	-	-	1901697-1	FEED FINGER ASSEMBLY,EF	183
	-	-	-	2	-	21045-3	RING, RETAIN, EXTERN, 3/16 CRESCENT	172
	-	1	1	1	1	994969-1	MAGNET, RARE EARTH HIGH ENERGY	166
	-	REF	REF	REF	REF	994970-2	COUNTER, MAGNETIC	164
	-	-	-	1	-	240638-1	SPRING, FEED FINGER	163
	-	1	1	1	1	8-21084-1	O-RING, .801 ID, .070 DIA. MAT.	153
	-	-	-	1	-	2119641-2	FEED CAM, AIR FEED	152
	-	1	1	1	1	2119798-2	DETENT PIN	145
	-	1	1	1	1	2079383-8	SCR, BHSC, RoHS (M4 X 16)	144
	-	-	-	-	1	2119653-2	FEED CAM, POST FEED	142
	-	1	1	1	1	2119655-6	APPLICATOR BASIC ASSEMBLY, EF	141
	-	1	1	1	1	2119651-1	RAM, ASIAN STYLE, END FEED	140
	-	1	1	1	1	2119092-2	BOLT, ADJUSTMENT	139
	-	-	-	1	-	3-23627-7	PIN, RETAIN, GRVD, 3/16 X .854	137
(4)	-	-	REF	-	-	SEE NOTE 4	MEMORY CHIP, PROGRAMMED	135
	-	-	1	-	-	1633743-1	SERVO FEED LATCH ASM	133
(14)	-	REF	REF	REF	REF	2119955-2	ASSY, LUBRICATOR, END FEED	84
	-	1	1	1	1	455888-5	SPACER, CRIMPER	82
	-	1	1	1	1	2119791-9	DEPRESSOR, WIRE	73
	-	1	1	1	1	2119956-2	DOCUMENTATION PACKAGE	71
	-	2	2	2	2	2-18032-2	SCR, SET, FLT POINT M3 X 10.0	70
	-	1	-	1	1	2119740-1	TAG,IDENTIFICATION	67
	-	2	2	2	2	2168078-1	SCREW, DRIVE, RH, RoHS, 2 x .188	66
	-	2	2	2	2	2168400-5	SHCS, LOW HEAD, RoHS, M4 X 20	64
	-	1	1	1	1	2119793-1	LIMITER, ADJUSTMENT BOLT	63
(6)	-	3	3	3	3	992763-5	SCR, SET, SOC, CONE POINT, M3 x 4.0	62
	-	-	-	-	1	5-18022-5	SCR, HEX HD CAP, M4 X 6.0	59
	-	-	-	-	1	2063961-1	FEED FINGER	58
	-	3	3	3	3	2168400-4	SHCS, LOW HEAD, RoHS, M4 X 8	57
(15)	-	2	2	2	2	1-2168083-0	SCR, SKT HD CAP, RoHS, M4 X 10	56
	-	2	2	2	2	5018030-2	NUT, HEX, REG, RoHS, M4	55
	-	2	2	2	2	5018030-1	NUT, HEX, REG, RoHS, M3	54
	-	2	2	2	2	986965-8	NUT, LOCK, HEX, TORQUE (M4)	53
	-	-	-	1	-	2119792-2	PAWL, EF, AIR	51
	-	-	-	1	2	18023-9	SCR, SKT HD CAP M4 X 6.0	49
	-	-	-	-	1	2119652-1	FEED CAM, PRE FEED	48
	-	1	1	1	1	2079383-7	SCR, BHSC, RoHS (M8 X 25)	41
	-	1	1	1	1	2119645-1	DISC, NUMBERED FA WIRE ADJUSTMENT	40
	-	1	1	1	1	2119957-1	APPLICATOR SHIM PACK	39
	-	1	1	1	1	2119644-1	RAM WASHER, PRECISION	38
	-	7	7	7	7	1-18028-2	WASHER, FLAT, REG M4	33
	-	2	2	2	2	2168083-9	SCR, SKT HD CAP, RoHS, M4 X 20	31
	-	2	2	2	2	1-2168083-0	SCR, SKT HD CAP, RoHS, M4 X 10	29
	-	1	1	1	1	240639-1	STRIPPER (MACHINING)	27
	-	2	2	2	2	1320906-1	STUD, THREADED	25
	-	1	1	1	1	1-1752371-2	PLATE, STRIP GUIDE	24
	-	1	1	1	1	240825-1	PLATE, STRIP HOLD DOWN	23
	-	2	2	2	2	2-22281-3	SPRING, COMPRESSION	22
	-	1	1	1	1	1752373-4	DRAG	20
	-	2	2	2	2	1901259-5	GUIDE, LOWER STRIP	18
	-	1	1	1	1	6-240641-3	SPACER	16
(1)	-	1	1	1	1	240644-5	PLATE, REAR SHEAR	11
	-	-	-	-	-	-	-	10
(1)	-	1	1	1	1	4-690495-3	PLATE, FRONT SHEAR	9
(1)	1	1	1	1	1	1333217-6	ANVIL, EF .090	8
(1)	-	1	1	1	1	690474-8	BLADE, SLUG	7
	-	1	1	1	1	4-240641-2	SPACER	5
	-	1	1	1	1	238009-1	BLOCK, FL CRIMPER SPACER	4
(1)	1	1	1	1	1	2-1633961-3	CRIMPER, INSULATION F PREMIUM	3
	-	-	-	-	-	-	-	2
(1)	1	1	1	1	1	4-456406-7	CRIMPER, WIRE PREMIUM	1

PACIFIC VERSION
Shown on sheets 3 of 4 & 4 of 4
(Atlantic version shown on sheets 1 of 4 & 2 of 4)

THIS DRAWING IS A CONTROLLED DOCUMENT FOR TYCO ELECTRONICS CORPORATION. IT IS SUBJECT TO CHANGE AND THE CONTROLLING ENGINEERING ORGANIZATION SHOULD BE CONTACTED FOR THE LATEST REVISION.

DIMENSIONS:	mm
TOLERANCES UNLESS OTHERWISE SPECIFIED:	0 PLC ±- / 1 PLC ±- / 2 PLC ±- / 3 PLC ±- / 4 PLC ±- / ANGLES ±-
MATERIAL	-
FINISH	-
DWN	B. WEAVER 16NOV2011
CHK	G. BAILEY 16NOV2011
APVD	G. BAILEY 16NOV2011
PRODUCT SPEC	-
APPLICATION SPEC	-
WEIGHT	-
	TE Connectivity Harrisburg, PA 17105-3608
NAME	Ocean End Feed Applicator -
SIZE	A1
CAGE CODE	00779
DRAWING NO	C-2150007
RESTRICTED TO	-
SCALE	1:1
SHEET	3 OF 4
REV	B3

Customer Accessible Production Drawing

SHEETS 1 & 2 ARE NOT REQUIRED FOR PACIFIC VERSION

THIS DRAWING IS UNPUBLISHED. RELEASED FOR PUBLICATION 2013
© COPYRIGHT 2013 BY TYCO ELECTRONICS CORPORATION. ALL RIGHTS RESERVED.

LOC	DIST
A	66

REVISIONS

P	LTR	DESCRIPTION	DATE	DWN	APVD
	-	SEE SHEET 1	-	-	-

FEED TYPE

MECHANICAL

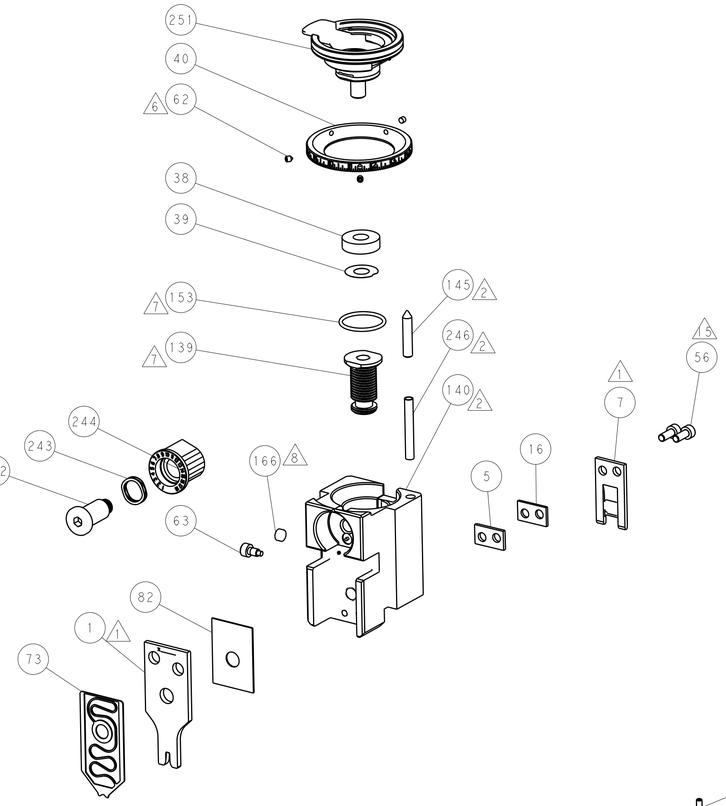

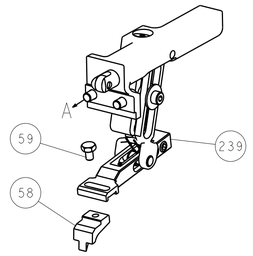

PNEUMATIC

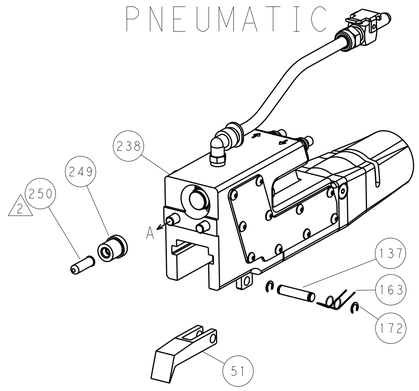

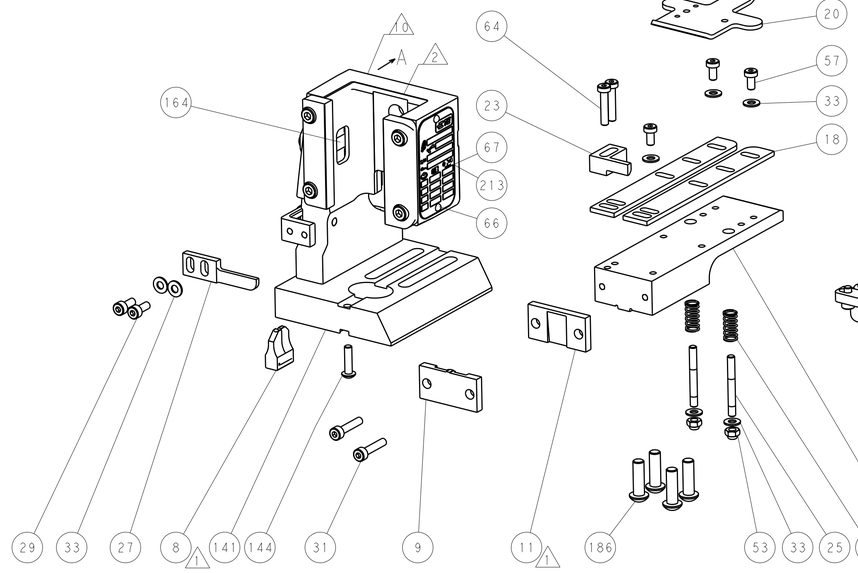

SERVO LATCH PLATE

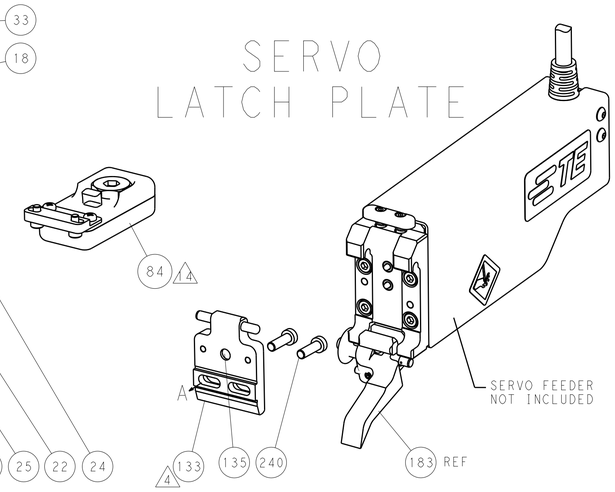

CAM POSITIONS

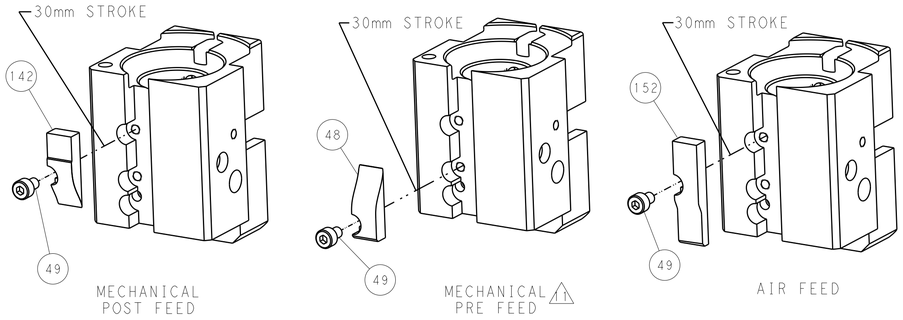

PACIFIC VERSION

Shown on sheets 3 of 4 & 4 of 4

(Atlantic version shown on sheets 1 of 4 & 2 of 4)

THIS DRAWING IS A CONTROLLED DOCUMENT FOR TYCO ELECTRONICS CORPORATION. IT IS SUBJECT TO CHANGE AND THE CONTROLLING DESIGNING ORGANIZATION SHOULD BE CONTACTED FOR THE LATEST REVISION.

DWN	B. WEAVER	16NOV2011
CHK	G. BAILEY	16NOV2011
APVD	G. BAILEY	16NOV2011

DIMENSIONS: mm

TOLERANCES UNLESS OTHERWISE SPECIFIED:
0 PLC ±-
1 PLC ±-
2 PLC ±-
3 PLC ±-
4 PLC ±-
ANGLES ±-

MATERIAL - - -
FINISH - - -

PRODUCT SPEC -
APPLICATION SPEC -
WEIGHT -

TE Connectivity
Harrisburg, PA 17105-3608

NAME: Ocean End Feed Applicator -

SIZE	CAGE CODE	DRAWING NO	RESTRICTED TO
A1	00779	C-2150007	-

Customer Accessible Production Drawing | SCALE 1:1 | SHEET 4 OF 4 | REV B3

AMP 4805 REV 31MAR2000

SHEETS 1 & 2 ARE NOT REQUIRED FOR PACIFIC VERSION

Общество с ограниченной ответственностью «МосЧип» ИНН 7719860671 / КПП 771901001
Адрес: 105318, г.Москва, ул.Щербаковская д.3, офис 1107

Данный компонент на территории Российской Федерации

Вы можете приобрести в компании MosChip.

Для оперативного оформления запроса Вам необходимо перейти по данной ссылке:

http://moschip.ru/get-element

Вы можете разместить у нас заказ для любого Вашего проекта, будь то серийное производство или разработка единичного прибора.

В нашем ассортименте представлены ведущие мировые производители активных и пассивных электронных компонентов.

Нашей специализацией является поставка электронной компонентной базы двойного назначения, продукции таких производителей как XILINX, Intel (ex.ALTERA), Vicor, Microchip, Texas Instruments, Analog Devices, Mini-Circuits, Amphenol, Glenair.

Сотрудничество с глобальными дистрибьюторами электронных компонентов, предоставляет возможность заказывать и получать с международных складов практически любой перечень компонентов в оптимальные для Вас сроки.

На всех этапах разработки и производства наши партнеры могут получить квалифицированную поддержку опытных инженеров.

Система менеджмента качества компании отвечает требованиям в соответствии с ГОСТ Р ИСО 9001, ГОСТ РВ 0015-002 и ЭС РД 009

Офис по работе с юридическими лицами:

105318, г.Москва, ул.Щербаковская д.3, офис 1107, 1118, ДЦ «Щербаковский»

Телефон: +7 495 668-12-70 (многоканальный)

Факс: +7 495 668-12-70 (доб.304)

E-mail: info@moschip.ru

Skype отдела продаж:
moschip.ru
moschip.ru_4
moschip.ru_6
moschip.ru_9