Product Data Sheets

C.27/4 Series

C.27/6 Series

C.27/7 Series

TYPICAL APPLICATIONS:
the capacitor is used in series to the start-winding of the single-phase electric motor, allowing its starting and increasing the torque during work. Main application fields: air-fans, pumps, circulators, and low power electric motors. The choice of the capacitor depends on expected life length and the mechanicalconnection of the user.

PRODUCT MARKING: TYPE A – EXAMPLE:

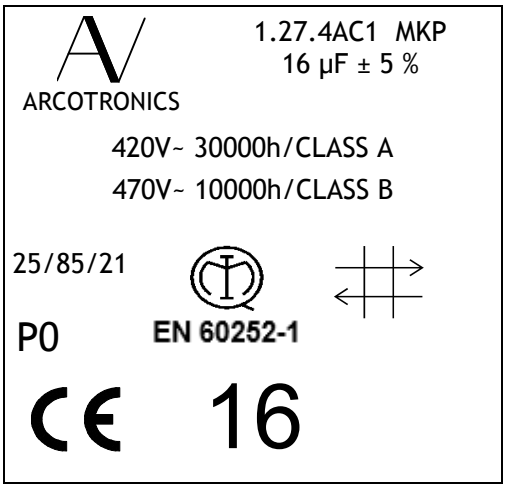

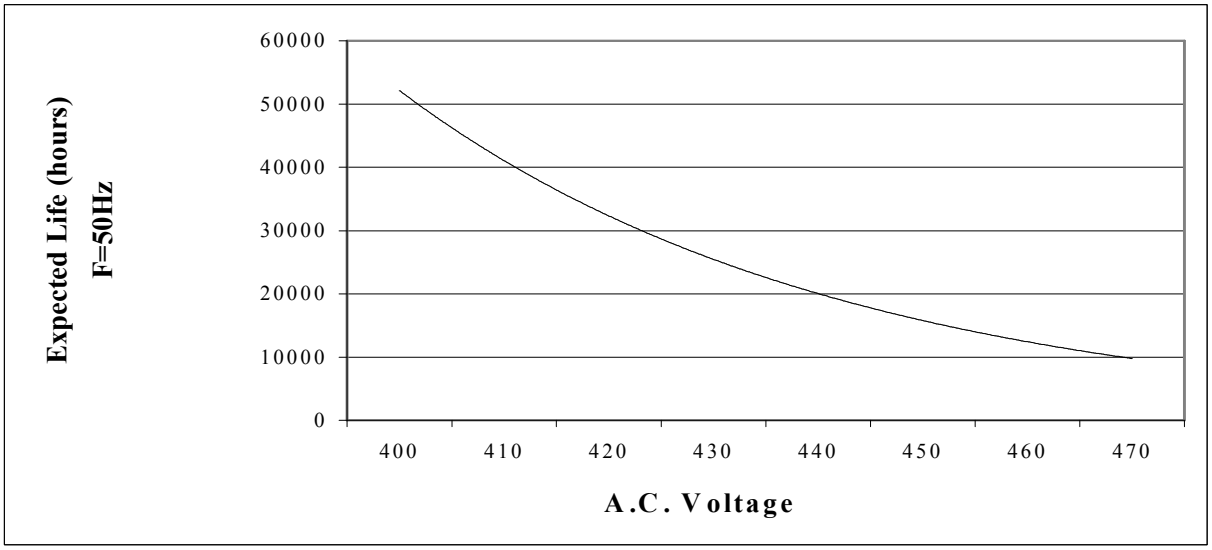

GENERAL DATA	SIZES TABLES	FAST-ON	BIPOLAR CABLE	FLEXIBLE CABLE	STIFF UNIPOLAR CABLE	HIGH TEMPERATURE	DRAWINGS
13	**14**	**27**	**29**	**33**	**34**	**35**	**57**

General technical data:

Reference standards	**IEC 252: 1993 EN 60252: 1994 CEI EN 60252: 1994**
EN 60 252-1 approval	**IMQ Testing and Certification Institute**
UL810 *"construction only"*	**Approved up 500 Vac** Standard Marking: 250Vac Please contact us for other types of marking
Type of Service:	Continuous
Working class:	**CLASS A – 30.000 hours, 420 Volt a.c.** **CLASS B – 10.000 hours, 470 Volt a.c.**
Min. / Max. Operating Temperature:	- 25 / 85 °C or – 25 / 100 °C (see page 35)
Storage Temperature:	- 40 / 90 °C
Rated voltage V_R (a.c.):	470 Volt a.c.
Rated frequency (Hz):	50 - 60 Hz
Voltage rise/fall time (max):	20 Volt / µs
Maximum Permissible Voltage:	1.10 x Rated Voltage
Maximum Permissible Current:	1.30 x Rated Current
Dissipation factor, Tgδ:	20×10^{-4} at 20°C, 50 Hz
Safety class:	P0
Maximum Altitude:	2000 m
Capacitance tolerance (standard):	± 5 %
Mounting:	Any position
Can:	Polypropylene with self-extinguishing features V2 (UL94). Noryl with self-extinguishing features VI (UL94) for diameters ≥ 50 mm
Disk:	Nylon PA66 with self-extinguishing features V0: fast-on execution. PC-A with self-extinguishing features V0: cable execution Noryl PPO with self-extinguishing features VI: for diameters ≥ 40mm cable execution
Filling Resin:	Polyurethane
Dielectric:	Polypropylene
Plates:	Self-healing metal layer
Test voltage terminal to terminal:	2 Vn for 2 s
Test voltage terminal to can:	2.000 Volt for 2 s
Leakage – Clearance in air between parts under voltage:	≥ 5mm
Leakage – Clearance in air between parts under voltage and accessible metal parts:	≥ 6mm
Vibration test:	IEC 68-2-6
Max Tightening torque:	5 Nm (M8) - 10 Nm (M12)

CASE WITH FIXING BOLT

Rated Cap.		Rated Current	Max dv/dt	Diameter	Height	Pack.	Diameter	Height	Pack.	Diameter	Height	Pack.	Weight
				FAST-ON			BIPOLAR CABLE			UNIPOLAR			(FAST-ON)
µF		A	V/µs	mm	mm	pcs	mm	mm	pcs	mm	mm	pcs	g
1.0		0.15	20	25	56.5	162	25	57	99	25	55	99	26
1.5		0.22	20	25	56.5	162	25	57	99	25	55	99	26
2.0		0.29	20	25	56.5	162	25	57	99	25	55	99	26
2.5		0.37	20	25	56.5	162	25	57	99	25	55	99	26
3.0		0.44	20	25	56.5	162	25	57	99	25	55	99	26
3.5		0.52	20	30	56.5	110	30	57	68	30	55	68	38
4.0		0.59	20	30	56.5	110	30	57	68	30	55	68	38
4.5		0.66	20	30	56.5	110	30	57	68	30	55	68	38
5.0		0.74	20	30	56.5	110	30	57	68	30	55	68	38
6.0		0.88	20	35	56.5	86	35	57	52	35	55	52	52
6.3		0.93	20	35	56.5	86	35	57	52	35	55	52	52
7.0		1.03	20	35	56.5	86	35	57	52	35	55	52	52
8.0		1.18	20	35	56.5	86	35	57	52	35	55	52	52
9.0		1.33	20	35	73.5	86	35	71.5	52	35	69.5	52	68
10.0		1.47	20	35	73.5	86	35	71.5	52	35	69.5	52	68
12.0		1.77	20	35	73.5	86	35	71.5	52	35	69.5	52	68
12.5		1.84	20	35	73.5	86	35	71.5	52	35	69.5	52	68
14.0		2.07	20	40	73.5	60	40	71.5	30	40	69.5	30	88
16.0		2.36	20	40	73.5	60	40	71.5	30	40	69.5	30	88
18.0		2.66	20	45	74	50	45	71.5	30	45	69.5	30	112
20.0		2.95	20	45	74	50	45	71.5	39	45	69.5	39	112
22.0		3.25	20	45	74	50	45	71.5	39	45	69.5	39	112
25.0		3.69	20	45	94.5	44	45	95	30	45	93	30	142
30.0		4.43	20	45	94.5	44	45	95	30	45	93	30	142
31.5		4.65	20	45	94.5	44	45	95	30	45	93	30	142
35.0		5.16	20	50	96	40	50	96.5	25	50	94.5	25	178
40.0		5.90	20	50	121	40	50	121.5	25	50	119.5	25	224
45.0		6.64	20	50	121	40	50	121.5	25	50	119.5	25	224
50.0	Θ	7.38	20	50	121	40	60	121.5	16	60	119.5	16	224
55.0	Θ	8.12	20	55	120	32	60	120.5	16	60	118.5	16	271
60.0	Θ	8.85	20	55	120	32	60	120.5	16	60	118.5	16	271

Θ Capacitor produced according to EN 60252-1 standard with Arcotronics self-certification

CASE WITHOUT FIXING BOLT

Rated Cap.		Rated Current	Max dv/dt	Diameter	Height	Pack.	Diameter	Height	Pack.	Diameter	Height	Pack.	Weight
				FAST-ON			BIPOLAR CABLE			UNIPOLAR			(FAST-ON)
µF		A	V/µs	mm	mm	pcs	mm	mm	pcs	mm	mm	pcs	g
1.0		0.15	20	25	56.5	162	25	57	99	25	55	99	26
1.5		0.22	20	25	56.5	162	25	57	99	25	55	99	26
2.0		0.29	20	25	56.5	162	25	57	99	25	55	99	26
2.5		0.37	20	25	56.5	162	25	57	99	25	55	99	26
3.0		0.44	20	25	56.5	162	25	57	99	25	55	99	26
3.5		0.52	20	30	56.5	110	30	57	68	30	55	68	38
4.0		0.59	20	30	56.5	110	30	57	68	30	55	68	38
4.5		0.66	20	30	56.5	110	30	57	68	30	55	68	38
5.0		0.74	20	30	56.5	110	30	57	68	30	55	68	38
6.0		0.88	20	35	56.5	86	35	57	52	35	55	52	52
6.3		0.93	20	35	56.5	86	35	57	52	35	55	52	52
7.0		1.03	20	35	56.5	86	35	57	52	35	55	52	52
8.0		1.18	20	35	56.5	86	35	57	52	35	55	52	52
9.0		1.33	20	35	73.5	86	35	71.5	52	35	69.5	52	68
10.0		1.47	20	35	73.5	86	35	71.5	52	35	69.5	52	68
12.0		1.77	20	35	73.5	86	35	71.5	52	35	69.5	52	68
12.5		1.84	20	35	73.5	86	35	71.5	52	35	69.5	52	68
14.0		2.07	20	40	73.5	60	40	71.5	39	40	69.5	39	88
16.0		2.36	20	40	73.5	60	40	71.5	39	40	69.5	39	88
18.0		2.66	20	45	74	50	45	71.5	30	45	69.5	30	112
20.0		2.95	20	45	74	50	45	71.5	30	45	69.5	30	112
22.0		3.25	20	45	74	50	45	71.5	30	45	69.5	30	112
25.0		3.69	20	45	94.5	44	45	95	30	45	93	30	142
30.0		4.43	20	45	94.5	44	45	95	30	45	93	30	142
31.5		4.65	20	45	94.5	44	45	95	30	45	93	30	142
35.0		5.16	20	50	94.5	40	50	95	25	50	93	25	198
40.0		5.90	20	50	118.5	40	50	119	25	50	117	25	224
45.0		6.64	20	50	118.5	40	50	119	25	50	117	25	224
50.0	Θ	7.38	20	50	118.5	40	60	119	16	60	117	16	224
55.0	Θ	8.12	20	55	118.5	32	60	119	16	60	117	16	271
60.0	Θ	8.85	20	55	118.5	32	60	119	16	60	117	16	271

Θ Capacitor produced according to EN60252-1 standard with Arcotronics self-certification

CASE WITH QUICK FITTING DEVICE

Rated Cap.	Rated Current	Max dv/dt	Diameter	Height	Pack.	Diameter	Height	Pack.	Diameter	Height	Pack.	Weight
			FAST-ON			BIPOLAR CABLE			UNIPOLAR			(FAST-ON)
µF	A	V/µs	mm	mm	pcs	mm	mm	pcs	mm	mm	pcs	g
1.0	0.15	20	25	56.5	99	25	57	99	25	55	99	26
1.5	0.22	20	25	56.5	99	25	57	99	25	55	99	26
2.0	0.29	20	25	56.5	99	25	57	99	25	55	99	26
2.5	0.37	20	25	56.5	99	25	57	99	25	55	99	26
3.0	0.44	20	25	56.5	99	25	57	99	25	55	99	26
3.5	0.52	20	30	56.5	68	30	57	68	30	55	68	38
4.0	0.59	20	30	56.5	68	30	57	68	30	55	68	38
4.5	0.66	20	30	56.5	68	30	57	68	30	55	68	38
5.0	0.74	20	30	56.5	68	30	57	68	30	55	68	38
6.0	0.88	20	35	56.5	52	35	57	52	35	55	52	52
6.3	0.93	20	35	56.5	52	35	57	52	35	55	52	52
7.0	1.03	20	35	56.5	52	35	57	52	35	55	52	52
8.0	1.18	20	35	56.5	52	35	57	52	35	55	52	52
9.0	1.33	20	35	73.5	52							68
10.0	1.47	20	35	73.5	52							68
12.0	1.77	20	35	73.5	52							68
12.5	1.84	20	35	73.5	52							68

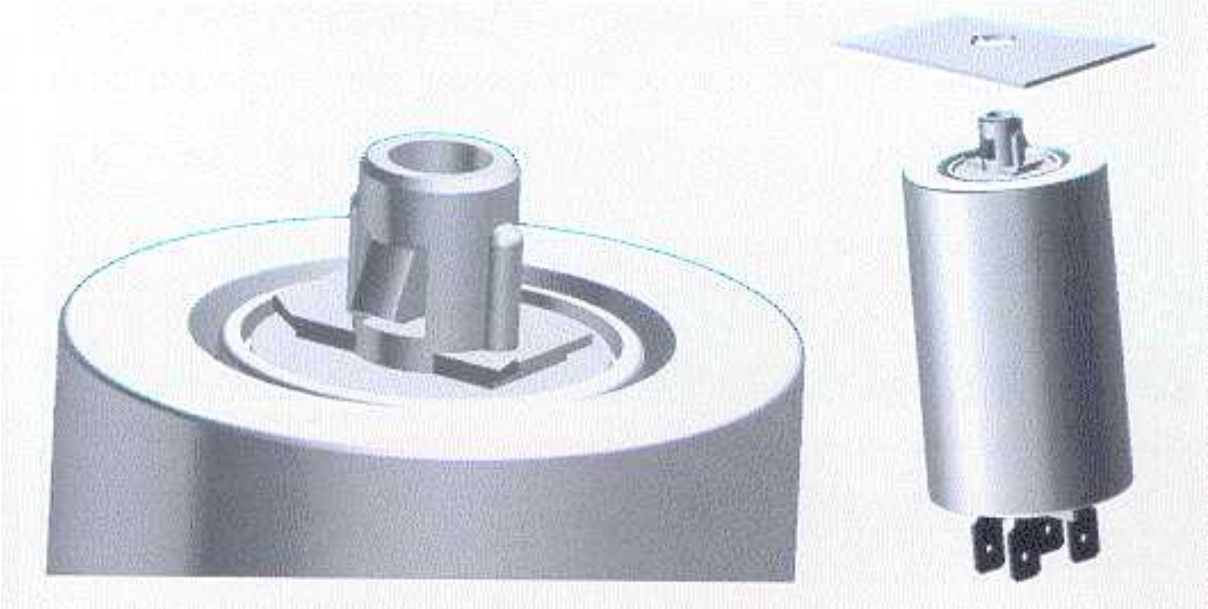

C.27/6

TYPICAL APPLICATIONS: the capacitor is used in series to the start-winding of the single-phase electric motor, allowing its starting and increasing the torque during work. C.27/6 series is particularly suitable for low voltage applications and medium expected life. Main application fields: air-fans, pumps, circulators, low power electric motor.

PRODUCT MARKING: TYPE C – EXAMPLE:

ARCOTRONICS

1.27.6CC2 MKP
5 µF ± 5 %

420V~ 10000h/CLASS B
470V~ 3000h/CLASS C

25/85/21

P0

EN 60252-1

CE 5

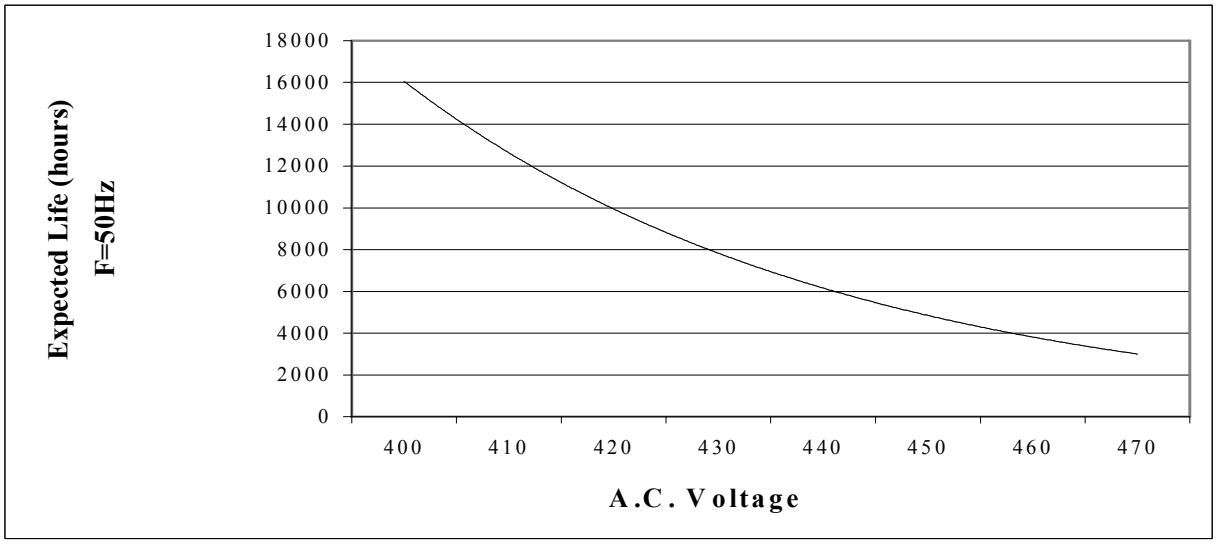

GENERAL DATA	SIZES TABLES	FAST-ON	BIPOLAR CABLE	FLEXIBLE CABLE	STIFF UNIPOLAR CABLE	DRAWINGS
18	19	27	29	33	34	57

General technical data:

Reference standards	**IEC 252: 1993 EN 60252: 1994 CEI EN 60252: 1994**
EN 60 252-1 approval	**IMQ Testing and Certification Institute**
UL810 "*construction only*"	**Approved up 500 Vac** Standard Marking: 250Vac Please contact us for other types of marking
Great Wall approval (China)	
Type of Service:	Continuous
Working class:	**CLASS B – 10.000 hours, 420 Volt a.c.** **CLASS C – 3.000 hours, 470 Volt a.c.**
Min. / Max. Operating Temperature:	- 25 / 85 °C
Storage Temperature:	- 40 / 90 °C
Rated voltage Vn (a.c.):	470 Volt a.c.
Rated frequency (Hz):	50 - 60 Hz
Voltage rise/fall time (max):	15 Volt / µs
Maximum Permissible Voltage:	1.10 x Rated Voltage
Maximum Permissible Current:	1.30 x Rated Current
Dissipation factor, Tgδ:	20×10^{-4} at 20°C, 50 Hz
Safety class:	P0
Maximum Altitude:	2000 m
Capacitance tolerance (standard):	± 5 %
Mounting:	Any position
Can:	Polypropylene with self-extinguishing features V2 (UL94). Noryl with self-extinguishing features VI (UL94) for diameters ≥50 mm
Disk:	Nylon PA66 with self-extinguishing features V0: fast-on execution. PC-A with self-extinguishing features V0: cable execution Noryl PPO with self-extinguishing features VI: for diameters ≥40mm cable execution
Filling Resin:	Polyurethane
Dielectric:	Polypropylene
Plates:	Self-healing metal layer
Test voltage terminal to terminal:	2 Vn for 2 s
Test voltage terminal to can:	2.000 Volt for 2 s
Leakage – Clearance in air between parts under voltage:	≥ 5mm
Leakage – Clearance in air between parts under voltage and accessible metal parts:	≥ 6mm
Vibration test:	IEC 68-2-6
Max Tightening torque:	5 Nm (M8) - 10 Nm (M12)

CASE WITH FIXING BOLT

Rated Cap.		Rated Current	Max dv/dt	Diameter	Height	Pack.	Diameter	Height	Pack.	Diameter	Height	Pack.	Weight
				FAST-ON			BIPOLAR CABLE			UNIPOLAR			(FAST-ON)
µF		A	V/µs	mm	mm	pcs	mm	mm	pcs	mm	mm	pcs	g
1.0		0.15	15	25	56.5	162	25	57	99	25	55	99	26
1.5		0.22	15	25	56.5	162	25	57	99	25	55	99	26
2.0		0.29	15	25	56.5	162	25	57	99	25	55	99	26
2.5		0.37	15	25	56.5	162	25	57	99	25	55	99	26
3.0		0.44	15	25	56.5	162	25	57	99	25	55	99	26
3.5		0.52	15	25	56.5	162	25	57	99	25	55	99	26
4.0		0.59	15	25	56.5	162	25	57	99	25	55	99	26
4.5		0.66	15	30	56.5	110	30	57	68	30	55	68	38
5.0		0.74	15	30	56.5	110	30	57	68	30	55	68	38
6.0		0.88	15	30	56.5	110	30	57	68	30	55	68	38
6.3		0.93	15	30	56.5	110	30	57	68	30	55	68	38
7.0		1.03	15	30	56.5	110	30	57	68	30	55	68	38
8.0		1.18	15	35	56.5	86	35	57	52	35	55	52	52
9.0		1.33	15	35	56.5	86	35	57	52	35	55	52	52
10.0		1.47	15	35	56.5	86	35	57	52	35	55	52	52
12.0		1.77	15	35	73.5	86	35	71,5	52	35	69.5	52	68
12.5		1.84	15	35	73.5	86	35	71.5	52	35	69.5	52	68
14.0		2.07	15	35	73.5	86	35	71.5	52	35	69.5	52	68
16.0		2.36	15	35	73.5	86	35	71.5	52	35	69.5	52	68
18.0		2.66	15	40	73.5	60	40	71.5	39	40	69.5	39	88
20.0		2.95	15	40	73.5	60	40	71.5	39	40	69.5	39	88
22.0		3.25	15	40	73.5	60	40	71.5	39	40	69.5	39	88
25.0		3.69	15	45	74	50	45	71.5	30	45	69.5	30	112
30.0		4.43	15	45	74	50	45	71.5	30	45	69.5	30	112
31.5		4.65	15	45	94.5	44	45	95	30	45	93	30	142
35.0		5.16	15	45	94.5	44	45	95	30	45	93	30	142
40.0		5.90	15	45	94.5	44	45	95	30	45	93	30	142
45.0		6.64	15	50	96	40	50	96.5	25	50	94.5	25	178
50.0		7.38	15	50	121	40	50	121.5	25	50	119.5	25	224
55.0		8.12	15	50	121	40	50	121.5	25	50	119.5	25	224
60.0	Θ	8.85	15	50	121	40	50	121.5	25	50	119.5	25	224
65.0	Θ	9.60	15	50	121	40	50	121.5	25	50	119.5	25	224
70.0	Θ	10.30	15	50	121	40	50	121.5	25	50	119.5	25	224

Θ Capacitor produced according to EN60252-1 standard with Arcotronics self-certification

CASE WITHOUT FIXING BOLT

Rated Cap.		Rated Current	Max dv/dt	Diameter	Height	Pack.	Diameter	Height	Pack.	Diameter	Height	Pack.	Weight
				FAST-ON			BIPOLAR CABLE			UNIPOLAR			(FAST-ON)
µF		A	V/µs	mm	mm	pcs	mm	mm	pcs	mm	mm	pcs	g
1.0		0.15	15	25	56.5	162	25	57	99	25	55	99	26
1.5		0.22	15	25	56.5	162	25	57	99	25	55	99	26
2.0		0.29	15	25	56.5	162	25	57	99	25	55	99	26
2.5		0.37	15	25	56.5	162	25	57	99	25	55	99	26
3.0		0.44	15	25	56.5	162	25	57	99	25	55	99	26
3.5		0.52	15	25	56.5	162	25	57	99	25	55	99	26
4.0		0.59	15	25	56.5	162	25	57	99	25	55	99	26
4.5		0.66	15	30	56.5	110	30	57	68	30	55	68	38
5.0		0.74	15	30	56.5	110	30	57	68	30	55	68	38
6.0		0.88	15	30	56.5	110	30	57	68	30	55	68	38
6.3		0.93	15	30	56.5	110	30	57	68	30	55	68	38
7.0		1.03	15	30	56.5	110	30	57	68	30	55	68	38
8.0		1.18	15	35	56.5	86	35	57	52	35	55	52	52
9.0		1.33	15	35	56.5	86	35	57	52	35	55	52	68
10.0		1.47	15	35	56.5	86	35	57	52	35	55	52	68
12.0		1.77	15	35	73.5	86	35	71.5	52	35	69.5	52	68
12.5		1.84	15	35	73.5	86	35	71.5	52	35	69.5	52	68
14.0		2.07	15	35	73.5	86	35	71.5	52	35	69.5	52	68
16.0		2.36	15	35	73.5	86	35	71.5	52	35	69.5	52	68
18.0		2.66	15	40	73.5	60	40	71.5	39	40	69.5	39	88
20.0		2.95	15	40	73.5	60	40	71.5	39	40	69.5	39	88
22.0		3.25	15	40	73.5	60	40	71.5	39	40	69.5	39	88
25.0		3.69	15	45	74	50	45	71.5	30	45	69.5	30	112
30.0		4.43	15	45	74	50	45	71.5	30	45	69.5	30	112
31.5		4.65	15	45	94.5	44	45	95	30	45	93	30	142
35.0		5.16	15	45	94.5	44	45	95	30	45	93	30	142
40.0		5.90	15	45	94.5	44	45	95	30	45	93	30	142
45.0		6.64	15	50	94.5	40	50	95	25	50	93	25	178
50.0		7.38	15	50	118.5	40	50	119	25	50	117	25	224
55.0		8.12	15	50	118.5	40	50	119	25	50	117	25	224
60.0	Θ	8.85	15	50	118.5	40	50	119	25	50	117	25	224
65.0	Θ	9.60	15	50	118.5	40	50	119	25	50	117	25	224
70.0	Θ	10.30	15	50	118.5	40	50	119	25	50	117	25	224

Θ Capacitor produced according EN60252-1 standard with Arcotronics self-certification

CASE WITH QUICK FITTING DEVICE

Rated Cap.	Rated Current	Max dv/dt	Diameter	Height	Pack.	Diameter	Height	Pack.	Diameter	Height	Pack.	Weight
			FAST-ON			BIPOLAR CABLE			UNIPOLAR			(FAST-ON)
µF	A	V/µs	mm	mm	pcs	mm	mm	pcs	mm	mm	pcs	g
1.0	0.15	15	25	56.5	297	25	57	99	25	55	99	26
1.5	0.22	15	25	56.5	297	25	57	99	25	55	99	26
2.0	0.29	15	25	56.5	297	25	57	99	25	55	99	26
2.5	0.37	15	25	56.5	297	25	57	99	25	55	99	26
3.0	0.44	15	25	56.5	297	25	57	99	25	55	99	26
3.5	0.52	15	25	56.5	207	25	57	99	25	55	99	26
4.0	0.59	15	25	56.5	297	25	57	99	25	55	99	26
4.5	0.66	15	30	56.5	204	30	57	68	30	55	68	38
5.0	0.74	15	30	56.5	204	30	57	68	30	55	68	38
6.0	0.88	15	30	56.5	204	30	57	68	30	55	68	38
6.3	0.93	15	30	56.5	204	30	57	68	30	55	68	38
7.0	1.03	15	30	56.5	204	30	57	68	30	55	68	38
8.0	1.18	15	35	56.5	136	35	57	52	35	55	52	52
9.0	1.33	15	35	56.5	136	35	57	52	35	55	52	68
10.0	1.47	15	35	56.5	136	35	57	52	35	55	52	68
12.0	1.77	15	35	73.5	104							68
12.5	1.84	15	35	73.5	104							68
14.0	2.07	15	35	73.5	104							68

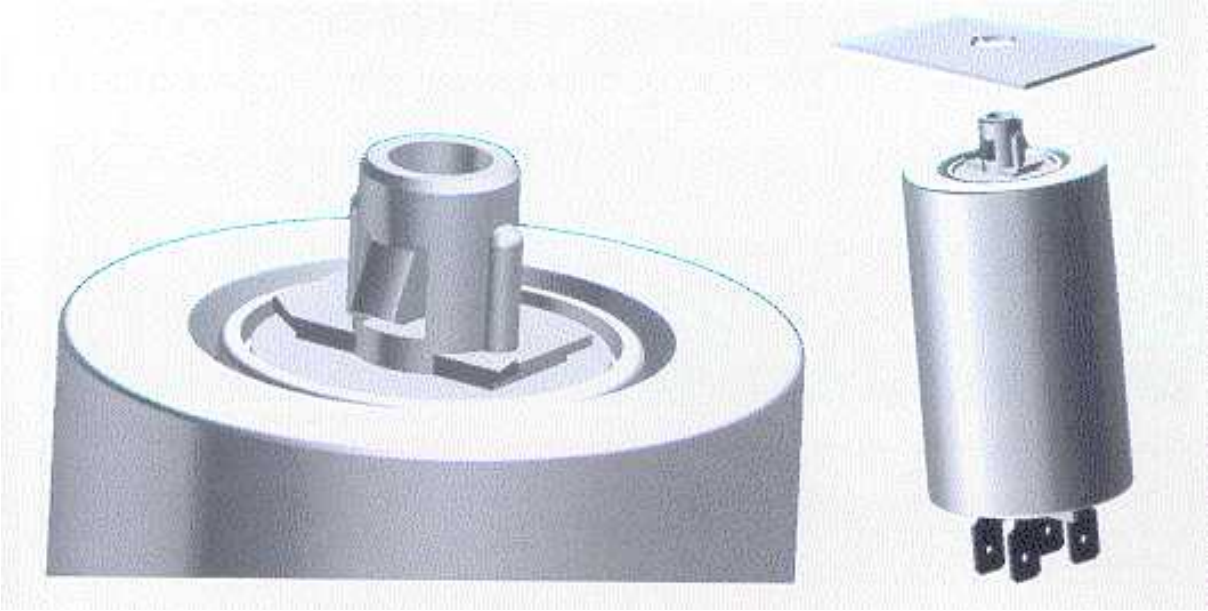

TYPICAL APPLICATIONS: the capacitor is used in series to the start-winding of the single-phase electric motor, allowing its starting and increasing the torque during work. This series is suitable for low voltage application and medium expected life. Main application fields: air-fans, rolling shutters motors, and battery chargers.

MARKING PRODUCT: TYPE L – EXAMPLE:

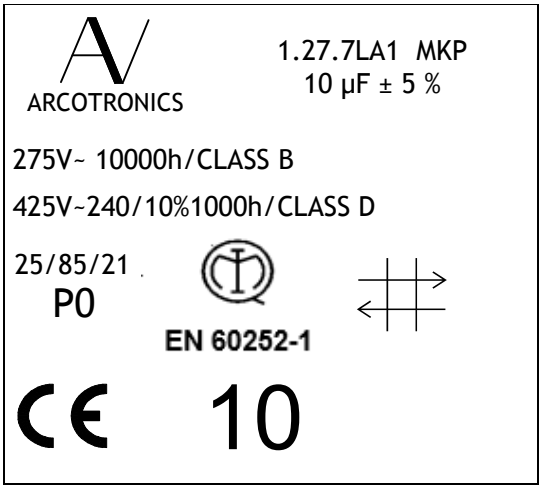

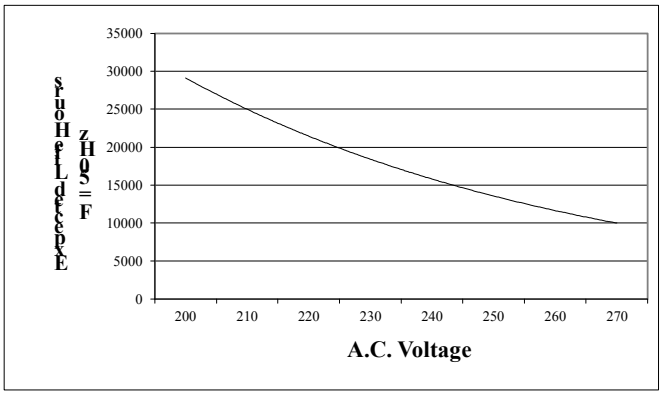

GENERAL DATA	SIZES TABLES	FAST-ON	BIPOLAR CABLE	FLEXIBLE CABLE	STIFF UNIPOLAR CABLE	DRAWINGS
23	**24**	**27**	**29**	**33**	**34**	**57**

General technical data:

Reference standards	**IEC 252: 1993 EN 60252: 1994**
EN 60 252-1 approval	**IMQ standard institute**
UL810 *"construction only"*	**Approved up 500 Vac** Standard Marking: 250Vac Please contact us for other types of marking
Type of working:	Continuous
Working class:	**CLASS B - 10.000 hours, 275 Volt a.c.** **Continuous working**
	CLASS D - 1.000 hours, 425 Volt a.c. **Intermittent Working 24min/240min**
Temperature: Operating Min. / Max.:	- 40 / 85 °C or – 25 / 85 °C
Storage:	- 40 / 90 °C
Rated voltage Vn (a.c.):	275Volt a.c.
Intermittent voltage Vn (ac)	425 Volt – 24 minutes every 4 hours
Rated frequency (Hz):	50 - 60 Hz
Voltage rise/fall time (max):	15 Volt / µs
Maximum Permissible Voltage:	1.10 x Rated Voltage
Maximum Permissible Current:	1.30 x Rated Current
Dissipation factor Tgδ:	20×10^{-4} at 20°C, 50 Hz
Safety class:	P0
Maximum altitude:	2000 m
Capacitance tolerance (standard):	± 5 %
Mounting:	Any position
Case:	Plastic Material with self-extinguishing features V2 (UL94). Noryl with self-extinguishing features V1 (UL94 standard) for diameters ≥ 50 mm
Disk:	Nylon PA66 with self-extinguishing features V0: fast-on execution. PC-A with self-extinguishing features V0: cable execution Noryl PPO with self-extinguishing features V1: for diameters ≥ 40mm cable execution
Dielectric:	Polypropylene
Plates:	Self-healing metal layer
Voltage test terminal to terminal:	2 Vn for 2 s Continuous working / 1.5 Intermittent working
Voltage test terminal to case:	2.000 Volt for 2 s
Leakage – Clearance in air between parts under voltage:	≥ 5mm
Leakage – Clearance in air between parts under voltage and accessible metal parts:	≥ 6mm
Vibration test:	IEC 68-2-6
Max Tightening torque:	5 Nm (M8) - 10 Nm (M12)

CASE WITH FIXING BOLT

Rated Cap.		Rated Current	Max dv/dt	Diameter	Height	Pack.	Diameter	Height	Pack.	Diameter	Height	Pack.	Weight
				FAST-ON			BIPOLAR CABLE			UNIPOLAR			(FAST-ON)
µF		A	V/µs	mm	mm	pcs	mm	mm	pcs	mm	mm	pcs	g
1.0		0.1	15	25	56.5	162	25	57	99	25	55	99	26
1.5		0.1	15	25	56.5	162	25	57	99	25	55	99	26
2.0		0.2	15	25	56.5	162	25	57	99	25	55	99	26
2.5		0.2	15	25	56.5	162	25	57	99	25	55	99	26
3.0		0.3	15	25	56.5	162	25	57	99	25	55	99	26
3.5		0.3	15	25	56.5	162	25	57	99	25	55	99	26
4.0		0.3	15	25	56.5	162	25	57	99	25	55	99	26
4.5		0.3	15	25	56.5	162	25	57	99	25	55	99	26
5.0		0.4	15	25	56.5	162	25	57	99	25	55	99	26
6.0		0.5	15	30	56.5	110	30	57	68	30	55	68	38
6.3		0.5	15	30	56.5	110	30	57	68	30	55	68	38
7.0		0.6	15	30	56.5	110	30	57	68	30	55	68	38
8.0		0.7	15	30	56.5	110	30	57	68	30	55	68	38
9.0		0.8	15	30	56.5	110	30	57	68	30	55	68	38
10.0		0.9	15	30	56.5	110	30	57	68	30	55	68	38
12.0		1.0	15	35	56.5	86	35	57	52	35	55	52	52
14.0		1.2	15	35	56.5	86	35	57	52	35	55	52	52
16.0		1.4	15	35	73.5	86	35	71.5	52	35	69.5	52	68
18.0		1.6	15	35	73.5	86	35	71.5	52	35	69.5	52	68
20.0		1.7	15	35	73.5	86	35	71.5	52	35	69.5	52	68
22.0		1.9	15	35	73.5	86	35	71.5	52	35	69.5	52	68
25.0		2.2	15	40	73.5	60	40	71.5	39	40	69.5	39	88
30.0		2.6	15	40	73.5	60	40	71.5	39	40	69.5	39	88
31.5		2.7	15	45	74	50	45	71.5	30	45	69.5	30	112
35.0		3.0	15	45	74	50	45	71.5	30	45	69.5	30	112
40.0		3.5	15	45	94.5	44	45	95	30	45	93	30	142
45.0	Θ	3.9	15	45	94.5	44	45	95	30	45	93	30	142
50.0	Θ	4.3	15	45	94.5	44	45	95	30	45	93	30	142
55.0	Θ	4.8	15	45	94.5	44	45	95	30	45	93	30	142
60.0	Θ	5.2	15	45	94.5	44	45	95	30	45	93	30	142
65.0	Θ	5.7	15	50	96	40	50	96.5	25	50	94.5	25	178
70.0	Θ	6.1	15	50	96	40	50	96.5	25	50	94.5	25	178
75.0	Θ	6.5	15	50	96	40	50	96.5	25	50	94.5	25	178
80.0	Θ	7.0	15	50	121	40	50	121.5	25	50	119.5	25	224
90.0	Θ	7.8	15	50	121	40	50	121.5	25	50	119.5	25	224
100.0	Θ	8.7	15	50	121	40	50	121.5	25	50	119.5	25	224

Θ Capacitor produced according EN60252-1 standard with Arcotronics self-certification

CASE WITHOUT FIXING BOLT

Rated Cap.		Rated Current	Max dv/dt	Diameter	Height	Pack.	Diameter	Height	Pack.	Diameter	Height	Pack.	Weight
				FAST-ON			BIPOLAR CABLE			UNIPOLAR			(FAST-ON)
µF		A	V/µs	mm	mm	pcs	mm	mm	pcs	mm	mm	pcs	g
1.0		0.1	15	25	56.5	162	25	57	99	25	55	99	26
1.5		0.1	15	25	56.5	162	25	57	99	25	55	99	26
2.0		0.2	15	25	56.5	162	25	57	99	25	55	99	26
2.5		0.2	15	25	56.5	162	25	57	99	25	55	99	26
3.0		0.3	15	25	56.5	162	25	57	99	25	55	99	26
3.5		0.3	15	25	56.5	162	25	57	99	25	55	99	26
4.0		0.3	15	25	56.5	162	25	57	99	25	55	99	26
4.5		0.3	15	25	56.5	162	25	57	99	25	55	99	26
5.0		0.4	15	25	56.5	162	25	57	99	25	55	99	26
6.0		0.5	15	30	56.5	110	30	57	68	30	55	68	38
6.3		0.5	15	30	56.5	110	30	57	68	30	55	68	38
7.0		0.6	15	30	56.5	110	30	57	68	30	55	68	38
8.0		0.7	15	30	56.5	110	30	57	68	30	55	68	38
9.0		0.8	15	30	56.5	110	30	57	68	30	55	68	38
10.0		0.9	15	30	56.5	110	30	57	68	30	55	68	38
12.0		1.0	15	35	56.5	86	35	57	52	35	55	52	52
14.0		1.2	15	35	56.5	86	35	57	52	35	55	52	52
16.0		1.4	15	35	73.5	86	35	71.5	52	35	69.5	52	68
18.0		1.6	15	35	73.5	86	35	71.5	52	35	69.5	52	68
20.0		1.7	15	35	73.5	86	35	71.5	52	35	69.5	52	68
22.0		1.9	15	35	73.5	86	35	71.5	52	35	69.5	52	68
25.0		2.2	15	40	73.5	60	40	71.5	39	40	69.5	39	88
30.0		2.6	15	40	73.5	60	40	71.5	39	40	69.5	39	88
31.5		2.7	15	45	74	50	45	71.5	30	45	69.5	30	112
35.0		3.0	15	45	74	50	45	71.5	30	45	69.5	30	112
40.0		3.5	15	45	94.5	44	45	95	30	45	93	30	142
45.0	Θ	3.9	15	45	94.5	44	45	95	30	45	93	30	142
50.0	Θ	4.3	15	45	94.5	44	45	95	30	45	93	30	142
55.0	Θ	4.8	15	45	94.5	44	45	95	30	45	93	30	142
60.0	Θ	5.2	15	45	94.5	44	45	95	30	45	93	30	142
65.0	Θ	5.7	15	50	94.5	40	50	95	25	50	93	25	178
70.0	Θ	6.1	15	50	94.5	40	50	95	25	50	93	25	178
75.0	Θ	6.5	15	50	94.5	40	50	95	25	50	93	25	178
80.0	Θ	7.0	15	50	118.5	40	50	119	25	50	117	25	224
90.0	Θ	7.8	15	50	118.5	40	50	119	25	50	117	25	224
100.0	Θ	8.7	15	50	118.5	40	50	119	25	50	117	25	224

Θ Capacitor produced according EN60252-1 standard with Arcotronics self-certification

CASE WITH QUICK FITTING DEVICE

Rated Cap.	Rated Current	Max dv/dt	Diameter	Height	Pack.	Diameter	Height	Pack.	Diameter	Height	Pack.	Weight
			FAST-ON			BIPOLAR CABLE			UNIPOLAR			(FAST-ON)
µF	A	V/µs	mm	mm	pcs	mm	mm	pcs	mm	mm	pcs	g
1.0	0.1	15	25	56.5	162	25	57	99	25	55	99	26
1.5	0.1	15	25	56.5	162	25	57	99	25	55	99	26
2.0	0.2	15	25	56.5	162	25	57	99	25	55	99	26
2.5	0.2	15	25	56.5	162	25	57	99	25	55	99	26
3.0	0.3	15	25	56.5	162	25	57	99	25	55	99	26
3.5	0.3	15	25	56.5	162	25	57	99	25	55	99	26
4.0	0.3	15	25	56.5	162	25	57	99	25	55	99	26
4.5	0.3	15	25	56.5	162	25	57	99	25	55	99	26
5.0	0.4	15	25	56.5	162	25	57	99	25	55	99	26
6.0	0.5	15	30	56.5	110	30	57	68	30	55	68	38
6.3	0.5	15	30	56.5	110	30	57	68	30	55	68	38
7.0	0.6	15	30	56.5	110	30	57	68	30	55	68	38
8.0	0.7	15	30	56.5	110	30	57	68	30	55	68	38
9.0	0.8	15	30	56.5	110	30	57	68	30	55	68	38
10.0	0.9	15	30	56.5	110	30	57	68	30	55	68	38
12.0	1.0	15	35	56.5	86	35	57	52	35	55	52	52
14.0	1.2	15	35	56.5	86	35	57	52	35	55	52	52
16.0	1.4	15	35	73.5	86							68
18.0	1.6	15	35	73.5	104							68
20.0	1.7	15	35	73.5	104							68
22.0	1.9	15	35	73.5	104							68

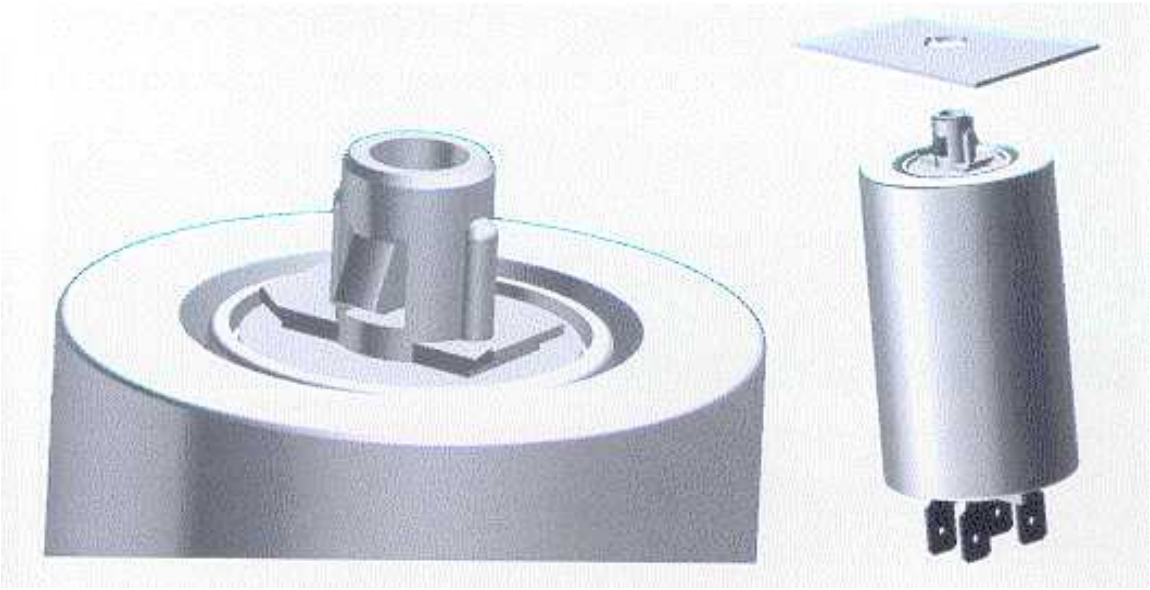

C.27. SERIES Fast-on 2.8 mm with Hole

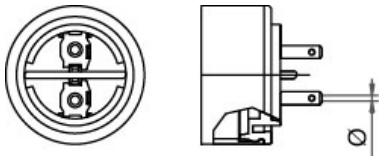

TYPE OF TERMINAL	FAST-ON 2.8 WITH HOLE
Execution:	Standard
Protection degree	IP00
Wire Material	Steel tinned by electrolysis
Length	2.8 mm
Thickness	0.8 mm
Hole Diameter	1.3
Standard	DIN46244
Nut	Steel coated with zinc M8 UNI5589 DIN 936
Washer	Diameter 8.4 White steel coated with zinc DIN 6798

Metal bolt / quick fit execution	C	2	7	-	**-**	**C/D**	**1**	-	-	-	-	A	A	-	-

Basic execution	C	2	7	-	**-**	**A**	**1**	-	-	-	-	A	A	-	-

C.27. SERIES Fast-on 2.8 mm with Slot

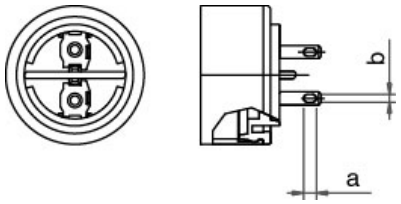

TYPE OF TERMINAL	FAST ON 2.8 WITH SLOT (SOLDERING TERMINALS)
Execution:	On request
Protection degree	IP00
Wire material	Steel tinned by electrolysis
Length	2.8 mm
Thickness	0.8 mm
Slot a x b	2.8 x 1.7
Standard	DIN46244
Nut	Steel coated with zinc M8 UNI5589 DIN 936
Washer	Diameter 8.4 White steel coated with zinc DIN 6798

Metal bolt / quick fit execution	C	2	7	-	-	**C/D**	**4**	-	-	-	-	A	A	-	-

Basic execution	C	2	7	-	-	**A**	**4**	-	-	-	-	A	A	-	-

C.27. SERIES Single Fast-on 6.3 mm

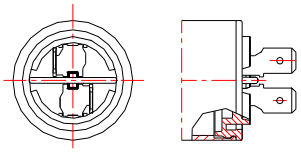

TERMINAL	FAST-ON 6.3 (SINGLE)
Execution:	Standard
Protection degree	IP00
Wire material	Steel tinned by electrolysis
Length	6.3 mm
Thickness	0.8 mm
Standard	DIN46244
Nut	Steel coated with zinc M8 UNI5589 DIN 936
Washer	Diameter 8.4 White steel coated with zinc DIN 6798

Metal bolt / quick fit execution	C	2	7	-	**-**	**C/D**	**2**	-	-	-	-	A	A	-	-

Basic execution	C	2	7	-	**-**	**A**	**2**	-	-	-	-	A	A	-	-

C.27. SERIES Double Fast-on 6.3 mm

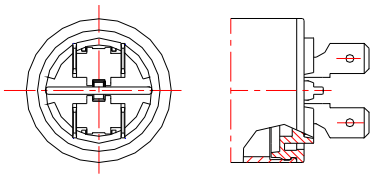

TYPE OF TERMINAL	FAST-ON 6.3MM (DOUBLE)
Execution:	Standard
Protection degree	IP00
Wire material	Steel tinned by electrolysis
Length	6.3 mm
Thickness	0.8 mm
Standard	DIN46244
Nut	Steel coated with zinc M8 UNI5589 DIN 936
Washer	Diameter 8.4 White steel coated with zinc DIN 6798

Metal bolt / quick fit execution	C	2	7	-	**-**	**C/D**	**3**	-	-	-	-	A	A	-	-

Basic execution	C	2	7	-	**-**	**A**	**3**	-	-	-	-	A	A	-	-

C.27. SERIES Bipolar Cable Standard Execution

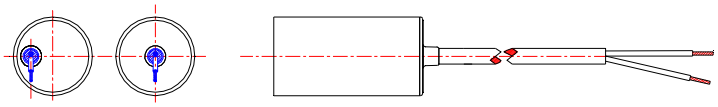

Cable mark : H05 V2 V2-F 90°C

TYPE	FLEXIBLE BIPOLAR CABLE FOR HIGH TEMPERATURE
Execution:	Standard
Protection degree	IP55
Cable	PVC (Polyvinyl chloride)
Designation	H05V2V2-F
Standard	CEI 20 – 20
Operating Temperature	90 °C
Conductor	Flexible soft copper wire 2 x 0.75 sq.mm
Insulating	Polyvinyl chloride TI3
Sleeve	Polyvinyl chloride TM3
Conductors colour	Blue / Brown
Cable stripping. (Sg)	40 mm
Cable peeling (Sp)	8 mm
Finishing	Tinning

Metal bolt / quick fit execution	C	2	7	-	-	**C/D**	**F**	-	-	-	-			-	-
Total length															
S = 150 mm						**C/D**	**F**					**L**	**D**		
S = 200 mm						**C/D**	**F**					**L**	**E**		
S = 250 mm						**C/D**	**F**					**L**	**F**		
S = 300 mm						**C/D**	**F**					**L**	**G**		
S = 350 mm						**C/D**	**F**					**L**	**H**		
S = 400 mm						**C/D**	**F**					**L**	**I**		

Basic execution	C	2	7	-	-	**A**	**F**	-	-	-	-			-	-
Total Length															
S = 150 mm						**A**	**F**					**L**	**D**		
S = 200 mm						**A**	**F**					**L**	**E**		
S = 250 mm						**A**	**F**					**L**	**F**		
S = 300 mm						**A**	**F**					**L**	**G**		
S = 350 mm						**A**	**F**					**L**	**H**		
S = 400 mm						**A**	**F**					**L**	**I**		

For applications requiring a specific termination, Arcotronics supplies a full range of capacitors with a bipolar cable provided with terminal. The material used (Brass – Cu Zn) provided with tinning (Gal Sn) determines the quality and reliability of the connections also in the case of very high temperatures (155°C).

C.27. SERIES Bipolar Cable Pin Terminals

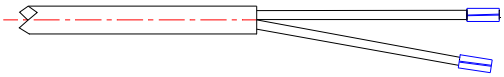

TYPE	BIPOLAR CABLE WITH PIN TERMINAL
Execution:	**Special**
Cable unsheathing	40 mm
Terminations:	
Point material	Cu Zn gal Sn
Material thickness	0.25 mm
Terminal length	7 mm

Metal bolt / quick fit execution	C	2	7	-	-	**C/D**	**J**	-	-	-	-	*	*	-	-
Total length S = 300 mm						**C/D**	**J**					**L**	**G**		

Basic execution	C	2	7	-	-	**A**	**J**	-	-	-	-	*	*	-	-
Total length S = 300mm						**A**	**J**					**L**	**G**		

C.27. SERIES Bipolar Cable Straight Fast-on 6.3 mm

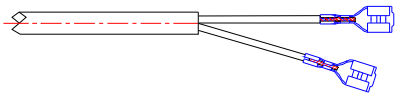

TYPE	BIPOLAR CABLE WITH STRAIGHT FAST-ON 6.3
Execution:	**Special**
Termination:	Straight Female Fast-on – 6.3
Cable stripping	40 mm
Fast – on material	Cu Zn gal Sn
Material thickness	0.42 mm
Terminal length	19.3 mm

Metal bolt / quick fit execution	C	2	7	-	-	**C/D**	**H**	-	-	-	-	*	*	-	-
Total length S = 300 mm					-	**C/D**	**H**					**L**	**G**		

Basic execution	C	2	7	-	-	**A**	**H**	-	-	-	-	*	*	-	-
Total length S = 300 mm					-	**A**	**H**					**L**	**G**		

C.27. SERIES Bipolar Cable Straight Female Fast-on 4.8 mm

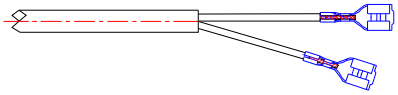

TYPE	BIPOLAR CABLE WITH STRAIGHT FEMALE FAST-ON 4.8
Execution:	**Special**
Termination:	Straight female fast-on – 4.8
Cable unsheathing	40 mm
Fast-on material	Cu Zn gal Sn
Material thickness	0.35 mm
Terminal length	15.6 mm

Metal bolt / quick fit execution	C	2	7	-	-	**C/D**	**G**	-	-	-	-	*	*	-	-
Total length S = 300 mm						**C/D**	**G**					**L**	**G**		

Basic execution	C	2	7	-	-	**A**	**G**	-	-	-	-	*	*	-	-
Total length S = 300 mm						**A**	**G**					**L**	**G**		

C.27. SERIES Bipolar Cable Flag Female Fast-on 4.8 mm

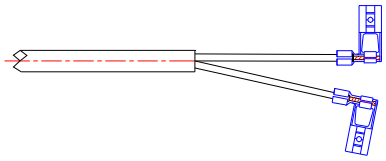

TYPE	BIPOLAR CABLE WITH FEMALE FLAG FAST-ON 4.8
Execution:	**Special**
Fast-on material	Cu Zn gal Sn
Material thickness	0.35 mm
Terminal length	12.5 mm

Metal bolt / quick fit execution	C	2	7	-	-	**C/D**	**L**	-	-	-	-	*	*	-	-
Total length S = 300 mm						**C/D**	**L**					**L**	**G**		

Basic execution	C	2	7	-	-	**A**	**L**	-	-	-	-	*	*	-	-
Total length S = 300 mm						**A**	**L**					**L**	**G**		

C.27. SERIES Bipolar Cable Flag Female Fast-on 6.3 mm

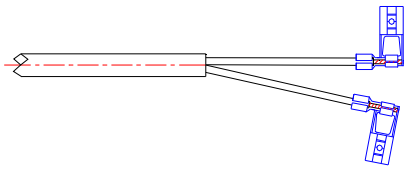

TYPE	**BIPOLAR CABLE WITH FEMALE FLAG FAST-ON A 6.3**
Execution:	**Special**
Fast-on material	Cu Zn gal Sn
Material thickness	0.35 mm
Terminal length	12.5 mm

Metal bolt / quick fit execution	C	2	7	-	-	**C/D**	**K**	-	-	-	-	*	*	-	-
Total length S = 300 mm						**C/D**	**K**					**L**	**G**		

Basic execution	C	2	7	-	-	**A**	**K**	-	-	-	-	*	*	-	-
Total length S = 300 mm						**A**	**K**					**L**	**G**		

C.27. SERIES Bipolar Cable Ring Terminals M4

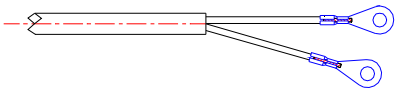

TYPE	**BIPOLAR CABLE WITH RING TERMINAL M4**
Execution:	**Special**
Terminal material	Cu Zn gal Sn
Material thickness	0.40 mm
Ring diameter	4 mm

Metal bolt / quick fit execution	C	2	7	-	-	**C/D**	**I**	-	-	-	-	*	*	-	-
Total length S=300 mm						**C/D**	**I**					**L**	**G**		

Basic execution	C	2	7	-	-	**A**	**I**	-	-	-	-	*	*	-	-
Total length S=300mm						**A**	**I**					**L**	**G**		

The range of capacitors belonging to C.27 series with a PVC unipolar cable has been specifically designed for applications in circulators and pumps fields. The cable is harmonised according to CEI 20-20 standards (CENELEC HD21) for an operating temperature of 90°C, but assures a maximum temperature up to 105°C.

C.27. SERIES Unipolar Cable Flexible

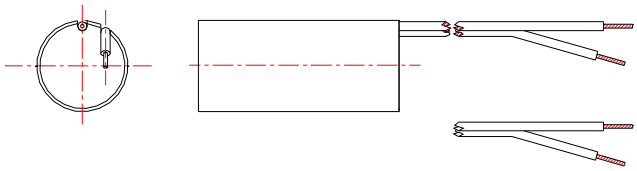

TYPE	PVC INSULATED UNIPOLAR CABLE, WITHOUT SLEEVE FOR HIGH TEMPERATURES
Execution:	Standard
Protection degree	IP55
Cable	PVC (Polyvinyl chloride)
Designation	H05V2-U
Standard	CEI 20 – 20
Operating temperature	90 °C
Conductor	**FLEXIBLE SOFT COPPER WIRE**
Section	0.75 sq.mm
Insulating	Good quality Polyvinyl chloride TI3
Insulating: Ext. diameter	2.4 mm (±0.2)
Sleeve	Absent
Conductor colour	White
Rated voltage	300 / 500 V
Cable unsheathing	8 mm
Finishing	Tinning

Metal bolt / quick fit execution	C	2	7	-	-	**C/D**		-	-	-	-	*	*	-	-
S = 100 mm							**A**					**A**	**C**		
S = 150 mm							**A**					**A**	**D**		
S = 200 mm							**A**					**A**	**E**		

Basic execution	C	2	7	-	-	**A**		-	-	-	-	*	*	-	-
S = 100 mm							**A**					**A**	**C**		
S = 150 mm							**A**					**A**	**D**		
S = 200 mm							**A**					**A**	**E**		

C.27 SERIES. Unipolar Cable Stiff Wires

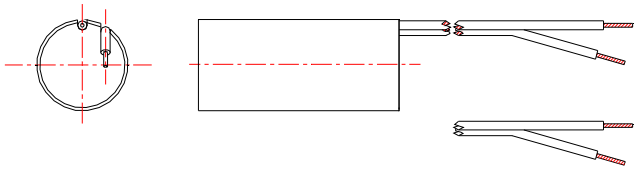

TYPE	PVC INSULATED UNIPOLAR CABLE, WITHOUT SLEEVE FOR HIGH TEMPERATURES
Execution:	Standard
Protection degree	IP55
Cable	PVC (Polyvinyl chloride)
Designation	H05V2-U
Standard	CEI 20 – 20
Operating temperature	90 °C
Conductor	**SINGLE SOFT COPPER WIRE**
Section	0.75 sq.mm
Insulating	Good quality Polyvinyl chloride TI3
Insulating: ext. diameter	2.3 mm (±0.2)
Sleeve	Absent
Conductors colour	White
Rated voltage	300 / 500 V
Cable unsheathing	8 mm
Cable: Minimum length	60 mm
Cable: Maximum length	250mm

Metal bolt / quick fit execution	C	2	7	-	-	**C/D**		-	-	-	-	*	*	-	-
Total length S = 100 mm						**C/D**	**R**					**A**	**C**		
S = 150 mm						**C/D**	**R**					**A**	**D**		

Basic execution	C	2	7	-	-	**A**		-	-	-	-	*	*	-	-
Total length S = 100 mm						**A**	**R**					**A**	**C**		
S = 150 mm						**A**	**R**					**A**	**D**		

Unipolar Cable Flexible High Temperature

The range of high temperature capacitors HT has been specifically designed for applications where a long life must be assured with high temperatures i.e. for circulators pumps. The capacitors have been approved by VDE in compliance with EN60252 standard for a maximum operating temperature up to 100°C, the expected life at 100 °C @ 400 Vac is 10000 H.

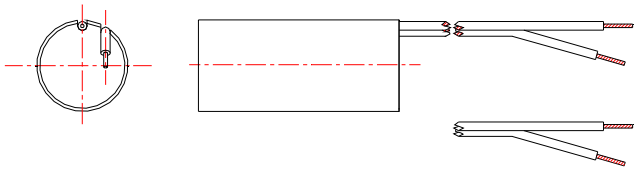

Operating Temperature:	
Minimum / Maximum	-25°C / + 100°C
Expected Life	10000 H (CLASS B) at 400 Vac 100 °C 10000 H (CLASS B) at 470 Vac 85 °C 30000 H (CLASS A) at 420 Vac 85 °C
Approval:	EN60252 (VDE)
Capacitance:	from 1 to 9 μ F
Standard execution:	PVC Stiff Cable
Type of cable	as for

Basic execution	C	2	7	4	E	*	A	-	-	-	-	*	*	-	-
S = 100 mm						A/C/D	**A**					**A**	**C**		
S = 150 mm						A/C/D	**A**					**A**	**D**		
S = 200 mm						A/C/D	**A**					**A**	**E**		

CAP.	dv/dt Max	Diameter	Height
μF	V/μs	ϕ	H
1	20	25	48
1.5	20	25	48
2	20	25	48
2.5	20	25	48
3	20	25	48
3.5	20	30	55
4	20	30	55
4.5	20	30	55
5	20	30	55
6	20	35	55
6.3	20	35	55
7	20	35	55
8	20	35	55

ACCESSORIES PLASTIC PROTECTION CAPACITORS:

Mechanical features

Protection degree	⇒	IP40
Material	⇒	Eva Novex V22 H864 (Polyethylene)
Selfextinguishing	⇒	HB
Colour	⇒	Natural

Mechanical drawing

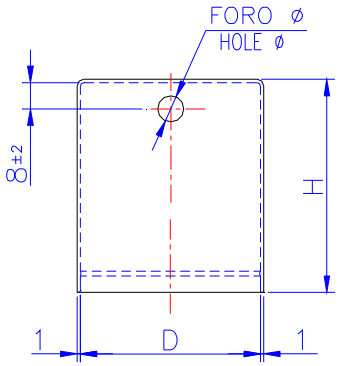

D (mm)	H (mm)	HOLE Φ (mm)	CODE
25	41	6	20.151.0079.00
25	41	8	20.151.0022.00
25	41	9	20.151.0081.00
30	40	6	20.151.0077.00
30	40	8	20.151.0023.00
30	65	8	20.151.0084.00
30	40	9	20.151.0082.00
30	40	10	20.151.0083.00
35	40	6	20.151.0078.00
35	40	8	20.151.0024.00
35	65	8	20.151.0085.00
35	40	10	20.151.0025.00
35	40	12	20.151.0026.00
40	50	6	20.151.0030.00
40	50	8	20.151.0033.00
40	50	10	20.151.0075.00
40	50	12	20.151.0035.00
45	50	6	20.151.0037.00
45	50	8	20.151.0040.00
45	50	10	20.151.0076.00
45	50	12	20.151.0042.00
50	65	8	20.151.0088.00
50	65	8	20.151.0089.00

C.27 SERIES – OPTIONS

Series	Fixing	Execution	Rated Cap. (from, to) µF	Diameter mm	Height mm
C.27/4	Bolt	Bipolar cable (unipolar cable)	3.5 to 5	25	71.5 (69.5)
C.27/4	Bolt	Bipolar cable (unipolar cable)	6 to 8	30	71.5 (69.5)
C.27/4	Bolt	Bipolar cable (unipolar cable)	14 to 16	35	95.5 (93.5)
C.27/4	Bolt	Bipolar cable (unipolar cable)	18 to 22	40	95.5 (93.5)
C.27/4	Bolt	Bipolar cable (unipolar cable)	35	50	95.5 (93.5)
C.27/4	Without bolt	Bipolar cable (unipolar cable)	3.5 to 5	25	71.5 (69.5)
C.27/4	Without bolt	Bipolar cable (unipolar cable)	6 to 8	30	71.5 (69.5)
C.27/4	Without bolt	Bipolar cable (unipolar cable)	14 to 16	35	95.5 (93.5)
C.27/4	Without bolt	Bipolar cable (unipolar cable)	18 to 22	40	95.5 (93.5)
C.27/4	Without bolt	Bipolar cable (unipolar cable)	35	50	120 (119.5)
C.27/6	Bolt	Bipolar cable (unipolar cable)	3.5 to 5	25	71.5 (69.5)
C.27/6	Bolt	Bipolar cable (unipolar cable)	6 to 8	30	71.5 (69.5)
C.27/6	Bolt	Bipolar cable (unipolar cable)	14 to 16	35	95.5 (95.5)
C.27/6	Bolt	Bipolar cable (unipolar cable)	18 to 22	40	95.5 (95.5)
C.27/6	Without bolt	Bipolar cable (unipolar cable)	3.5 to 5	25	71.5 (69.5)
C.27/6	Without bolt	Bipolar cable (unipolar cable)	6 to 8	30	71.5 (69.5)
C.27/6	Without bolt	Bipolar cable (unipolar cable)	14 to 16	35	95.5 (95.5)
C.27/6	Without bolt	Bipolar cable (unipolar cable)	18 to 22	40	95.5 (95.5)
C.27/7	Bolt	Bipolar cable (unipolar cable)	6 to 10	25	71.5 (69.5)
C.27/7	Bolt	Bipolar cable (unipolar cable)	12 to 14	30	71.5 (69.5)
C.27/7	Bolt	Bipolar cable (unipolar cable)	25 to 30	35	95.5 (93.5)
C.27/7	Bolt	Bipolar cable (unipolar cable)	31.5 to 35	40	95.5 (93.5)
C.27/7	Without bolt	Bipolar cable (unipolar cable)	6 to 10	25	71.5 (69.5)
C.27/7	Without bolt	Bipolar cable (unipolar cable)	12 to 14	30	71.5 (69.5)
C.27/7	Without bolt	Bipolar cable (unipolar cable)	25 to 30	35	95.5 (93.5)
C.27/7	Without bolt	Bipolar cable (unipolar cable)	31.5 to 35	40	95.5 (93.5)

Общество с ограниченной ответственностью «МосЧип» ИНН 7719860671 / КПП 771901001
Адрес: 105318, г.Москва, ул.Щербаковская д.3, офис 1107

Данный компонент на территории Российской Федерации

Вы можете приобрести в компании MosChip.

Для оперативного оформления запроса Вам необходимо перейти по данной ссылке:

http://moschip.ru/get-element

Вы можете разместить у нас заказ для любого Вашего проекта, будь то серийное производство или разработка единичного прибора.

В нашем ассортименте представлены ведущие мировые производители активных и пассивных электронных компонентов.

Нашей специализацией является поставка электронной компонентной базы двойного назначения, продукции таких производителей как XILINX, Intel (ex.ALTERA), Vicor, Microchip, Texas Instruments, Analog Devices, Mini-Circuits, Amphenol, Glenair.

Сотрудничество с глобальными дистрибьюторами электронных компонентов, предоставляет возможность заказывать и получать с международных складов практически любой перечень компонентов в оптимальные для Вас сроки.

На всех этапах разработки и производства наши партнеры могут получить квалифицированную поддержку опытных инженеров.

Система менеджмента качества компании отвечает требованиям в соответствии с ГОСТ Р ИСО 9001, ГОСТ РВ 0015-002 и ЭС РД 009

Офис по работе с юридическими лицами:

105318, г.Москва, ул.Щербаковская д.3, офис 1107, 1118, ДЦ «Щербаковский»

Телефон: +7 495 668-12-70 (многоканальный)

Факс: +7 495 668-12-70 (доб.304)

E-mail: info@moschip.ru

Skype отдела продаж:
moschip.ru
moschip.ru_4
moschip.ru_6
moschip.ru_9