Continental Device India Limited

An ISO/TS16949 and ISO 9001 Certified Company

NPN SILICON EPITAXIAL TRANSISTORS

CSC1213
CSC1213A

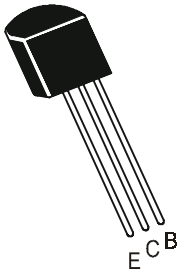

TO-92
Plastic Package

Low Frequency Amplifier.

ABSOLUTE MAXIMUM RATINGS (Ta=25ºC unless specified otherwise)

DESCRIPTION	SYMBOL	CSC1213		CSC1213A	UNIT
Collector Emitter Voltage	V_{CEO}	35		50	V
Collector Base Voltage	V_{CBO}	35		50	V
Emitter Base Voltage	V_{EBO}		4.0	6	V
Collector Current	I_C		500		mA
Collector Power Dissipation	P_C		400		mW
Operating And Storage Junction Temperature Range	T_j, T_{stg}		-55 to +150		ºC

ELECTRICAL CHARACTERISTICS (Ta=25ºC unless specified otherwise)

DESCRIPTION	SYMBOL		MIN	TYP	MAX	UNIT
Collector Base Voltage	V_{CBO}	I_C=10µA,I_E=0				
CSC1213			35			V
CSC1213A			50			V
Collector Emitter Voltage	V_{CEO}	I_C=1mA,I_B=0				
CSC1213			35			V
CSC1213A			50			V
Emitter Base Voltage	V_{EBO}	I_E=10µA, I_C=0	4.0			V
Collector Cut off Current	I_{CBO}	V_{CB}=20V, I_E = 0			500	nA
DC Current Gain	h_{FE}*	V_{CE}=3V,I_C=10mA	60		320	
	h_{FE}**	V_{CE}=3V,I_C=500mA	10			
Collector Emitter Saturation Voltage	$V_{CE(sat)}$* *	I_C=150mA,I_B=15mA			0.6	V
Base Emitter on Voltage	$V_{BE\ (on)}$	I_C=10mA, V_{CE}=3V		0.64		V

* hFE CLASSIFICATION	B	C	D
CSC1213 & CSC1213A	60-120	100-200	160-320

**** Pulse Test**

TO-92 Plastic Package

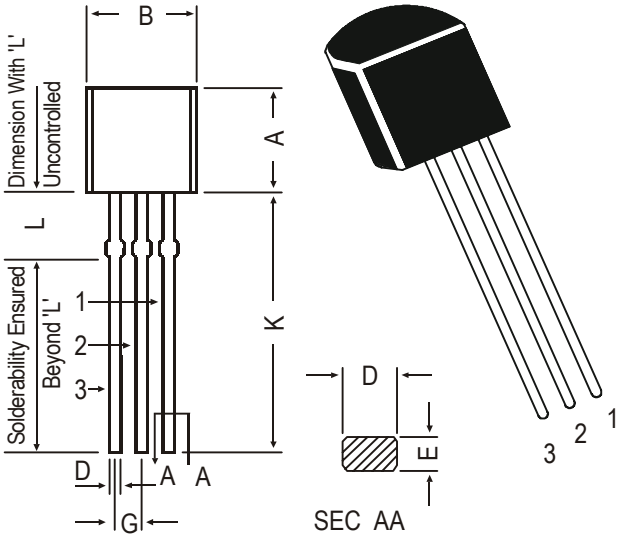

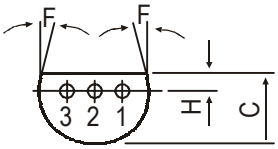

DIM	MIN.	MAX.
A	4.32	5.33
B	4.45	5.20
C	3.18	4.19
D	0.41	0.55
E	0.35	0.50
F	5 DEG	
G	1.14	1.40
H	1.14	1.53
K	12.70	—
L	1.982	2.082

All diminsions in mm.

PIN CONFIGURATION
1. BASE
2. COLLECTOR
3. EMITTER

TO-92 Transistors on Tape and Ammo Pack

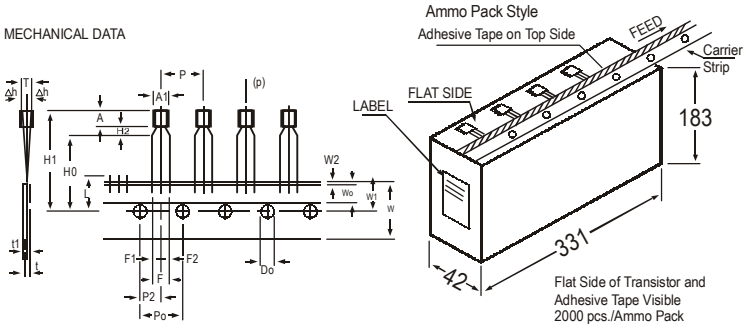

All dimensions in mm unless specified otherwise

ITEM	SYMBOL	SPECIFICATION				REMARKS
		MIN.	NOM.	MAX.	TOL .	
BODY WIDTH	A1	4.0		4.8		
BODY HEIGHT	A	4.8		5.2		
BODY THICKNESS	T	3.9		4.2		
PITCH OF COMPONENT	P		12.7		±1	
FEED HOLE PITCH	Po		12.7		±0.3	CUMULATIVE PITCH ERROR 1.0 mm/20 PITCH
FEED HOLE CENTRE TO COMPONENT CENTRE	P2		6.35		±0.4	TO BE MEASURED AT BOTTOM OF CLINCH
DISTANCE BETWEEN OUTER LEADS	F		5.08		+0.6 -0.2	
COMPONENT ALIGNMENT	△ h		0	1		AT TOP OF BODY
TAPE WIDTH	W		18		±0.5	
HOLD-DOWN TAPE WIDTH	Wo		6		±0.2	
HOLE POSITION	W1		9		+0.7 -0.5	
HOLD-DOWN TAPE POSITION	W2		0.5		±0.2	
LEAD WIRE CLINCH HEIGHT	Ho		16		±0.5	
COMPONENT HEIGHT	H1			23.25		
LENGTH OF SNIPPED LEADS	L			11.0		
FEED HOLE DIAMETER	Do		4		±0.2	
TOTAL TAPE THICKNESS	t			1.2		t1 0.3 - 0.6
LEAD - TO - LEAD DISTANCEF1,	F2		2.54		+0.4 -0.1	
CLINCH HEIGHT	H2			3		
PULL - OUT FORCE	(P)	6N				

NOTES
1. MAXIMUM ALIGNMENT DEVIATION BETWEEN LEADS NOT TO BE GREATER THAN 0.2 mm.
2. MAXIMUM NON-CUMULATIVE VARIATION BETWEEN TAPE FEED HOLES SHALL NOT EXCEED 1 mm IN 20 PITCHES.
3. HOLDDOWN TAPE NOT TO EXCEED BEYOND THE EDGE(S) OF CARRIER TAPE AND THERE SHALL BE NO EXPOSURE OF ADHESIVE.
4. NO MORE THAN 3 CONSECUTIVE MISSING COMPONENTS ARE PERMITTED.
5. A TAPE TRAILER, HAVING AT LEAST THREE FEED HOLES ARE REQUIRED AFTER THE LAST COMPONENT.
6. SPLICES SHALL NOT INTERFERE WITH THE SPROCKET FEED HOLES.

Packing Detail

PACKAGE	STANDARD PACK		INNER CARTON BOX		OUTER CARTON BOX		
	Details	Net Weight/Qty	Size	Qty	Size	Qty	Gr Wt
TO-92 Bulk	1K/polybag	200 gm/1K pcs	3" x 7.5" x 7.5"	5K	17" x 15" x 13.5"	80K	23 kgs
TO-92 T&A	2K/ammo box	645 gm/2K pcs	12.5" x 8" x 1.8"	2K	17" x 15" x 13.5"	32K	12.5 kgs

Disclaimer

The product information and the selection guides facilitate selection of the CDIL's Discrete Semiconductor Device(s) best suited for application in your product(s) as per your requirement. It is recommended that you completely review our Data Sheet(s) so as to confirm that the Device(s) meet functionality parameters for your application. The information furnished in the Data Sheet and on the CDIL Web Site/CD are believed to be accurate and reliable. CDIL however, does not assume responsibility for inaccuracies or incomplete information. Furthermore, CDIL does not assume liability whatsoever, arising out of the application or use of any CDIL product; neither does it convey any license under its patent rights nor rights of others. These products are not designed for use in life saving/support appliances or systems. CDIL customers selling these products (either as individual Discrete Semiconductor Devices or incorporated in their end products), in any life saving/support appliances or systems or applications do so at their own risk and CDIL will not be responsible for any damages resulting from such sale(s).

CDIL strives for continuous improvement and reserves the right to change the specifications of its products without prior notice.

CDIL is a registered Trademark of

Continental Device India Limited
C-120 Naraina Industrial Area, New Delhi 110 028, India.
Telephone + 91-11-2579 6150, 5141 1112 Fax + 91-11-2579 5290, 5141 1119
email@cdil.com www.cdilsemi.com

CSC1213_ARev081001

Общество с ограниченной ответственностью «МосЧип» ИНН 7719860671 / КПП 771901001
Адрес: 105318, г.Москва, ул.Щербаковская д.3, офис 1107

Данный компонент на территории Российской Федерации

Вы можете приобрести в компании MosChip.

Для оперативного оформления запроса Вам необходимо перейти по данной ссылке:

http://moschip.ru/get-element

Вы можете разместить у нас заказ для любого Вашего проекта, будь то серийное производство или разработка единичного прибора.

В нашем ассортименте представлены ведущие мировые производители активных и пассивных электронных компонентов.

Нашей специализацией является поставка электронной компонентной базы двойного назначения, продукции таких производителей как XILINX, Intel (ex.ALTERA), Vicor, Microchip, Texas Instruments, Analog Devices, Mini-Circuits, Amphenol, Glenair.

Сотрудничество с глобальными дистрибьюторами электронных компонентов, предоставляет возможность заказывать и получать с международных складов практически любой перечень компонентов в оптимальные для Вас сроки.

На всех этапах разработки и производства наши партнеры могут получить квалифицированную поддержку опытных инженеров.

Система менеджмента качества компании отвечает требованиям в соответствии с ГОСТ Р ИСО 9001, ГОСТ РВ 0015-002 и ЭС РД 009

Офис по работе с юридическими лицами:

105318, г.Москва, ул.Щербаковская д.3, офис 1107, 1118, ДЦ «Щербаковский»

Телефон: +7 495 668-12-70 (многоканальный)

Факс: +7 495 668-12-70 (доб.304)

E-mail: info@moschip.ru

Skype отдела продаж:
moschip.ru
moschip.ru_4
moschip.ru_6
moschip.ru_9