OMRON

Multi-vendor Network

DeviceNet

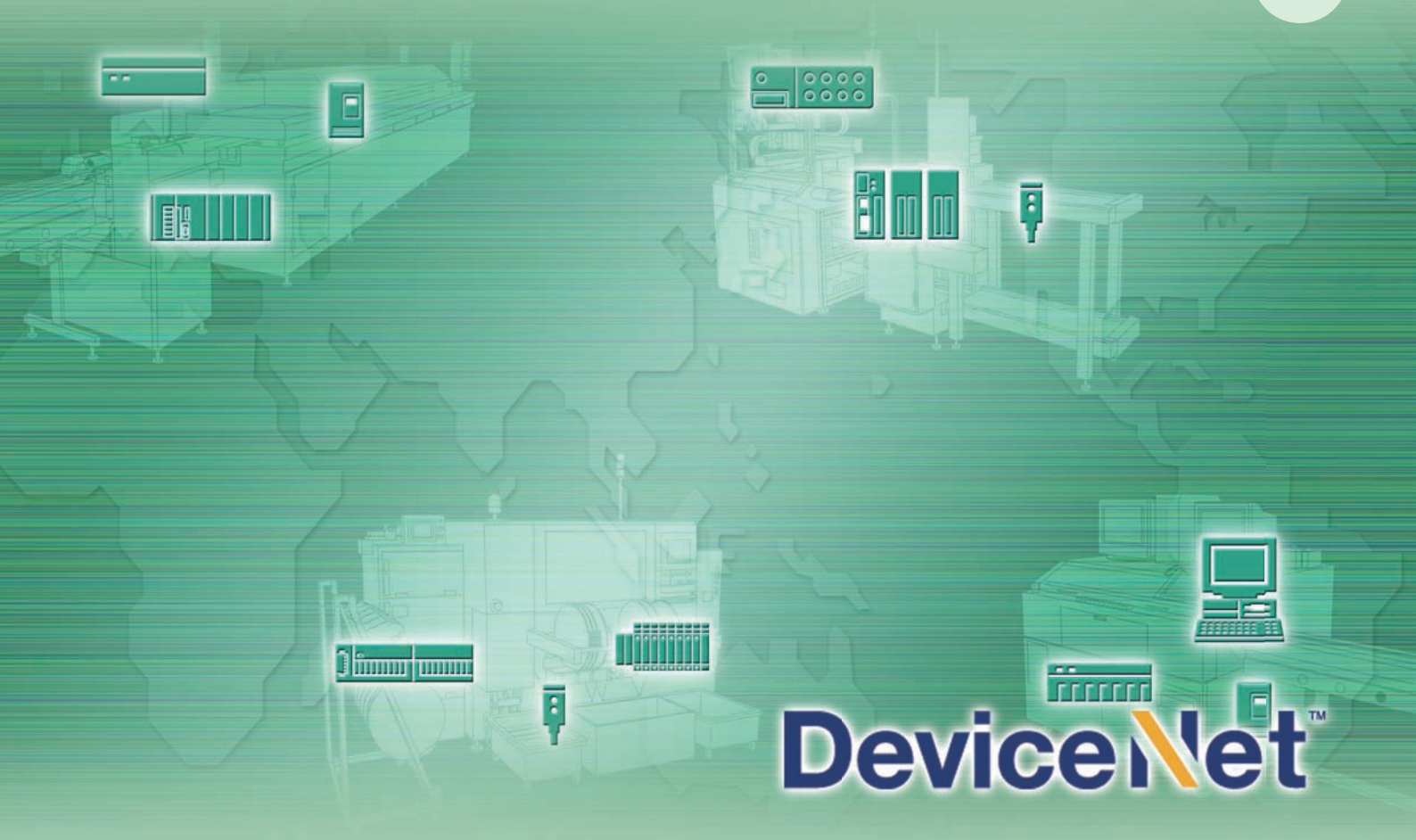

realizing

DeviceNet™

Today More Than Ever, DeviceNet Continues

New Lineup

Support for Machine Automation Controller NJ-Series!

Support for open network

The MX2 series/ MX2 series V1 type/ RX series V1 type* can be connected to DeviceNet by mounting the Communications Unit.

* Supported for the MX2 series Ver.1.1 or higher.
Not Supported for the RX series without V1 type.

8 types of remote I/O higher functions

8 types of remote I/O functions that exchange I/O data automatically without program are provided.
All of the following functions of the inverter can also be used.

- Simple positioning control
- Torque control
- Setting of acceleration/deceleration time etc.

Parameter Edit via DeviceNet

Parameters of the inverter can be edited via DeviceNet communication by using CX-Drive*, support tool of inverter/servo drive. No tool switching required.

* Supported for CX-Drive Ver.2.6 or higher.

MX2 series V1 type DeviceNet Communication Unit

3G3AX-MX2-DRT-E

P. 109

RX series V1 type DeviceNet Communication Unit

3G3AX-RX-DRT-E

P. 110

Selecting a Network Is a Strategic Decision. to Evolve.

INDEX

Overview — F-4
Introducing DeviceNet Products — F-12
Network Specifications — F-19

Master Units 1

CJ-series DeviceNet Unit (CJ1W-DRM21) — 2
CS-series DeviceNet Unit (CS1W-DRM21-V1) — 3
Programmable Controller NSJ Series (NSJ□-T□□1(B)-G5D) — 4
DeviceNet Board (PCI Board) (3G8F7-DRM21) — 7

Smart Slaves DRT2 Series 9

DRT2-series Smart Slaves

Smart Slaves DRT2 Series — 10
Transistor Remote I/O Terminals (DRT2-□D08(-1)/□D16(-1)) — 18
Expansion Units (XWT-ID08(-1)/OD08(-1)/ID16(-1)/OD16(-1)) — 22
Remote I/O Terminal with Relay Outputs (DRT2-ROS16) — 26
Transistor Remote I/O Terminals with 3-tier Terminal Blocks (DRT2-□D16TA(-1)) — 28
e-CON Connector Terminals (DRT2-□D16S(-1)) — 31
MIL Connector Terminals (with Transistor) (DRT2-□D32ML(-1)/□D16ML(-1)) — 34
Board Terminals with MIL Connector (DRT2-□D32B(-1)/□D32BV(-1)) — 39
Screw-less Clamp Terminals with Transistors (DRT2-□D16SL(H)(-1)/□D32SLH(H)(-1)) — 43
Environment-resistive Terminals with Transistors (High-function Type) (DRT2-□D08C(-1)/□D16C(-1)) — 48
Environment-resistive Terminals with Transistors (Standard type) (DRT2-□D04CL(-1)/□D08CL(-1)/□D16CL(-1)) — 51
Analog I/O Terminals (DRT2-AD04(H)/DA02) — 57
Temperature Input Terminals (DRT2-TS04□) — 60

SmartSlice GRT1 Series

SmartSlice GRT1 Series — 64
DeviceNet Communications Unit (GRT1-DRT) — 68
SmartSlice I/O Units — 70

MULTIPLE I/O TERMINAL Series

MULTIPLE I/O TERMINAL Series — 72
Communications Unit (DRT1-COM) — 73
Digital I/O Units (GT1-□D16(-1)/□D16MX(-1)/□D16ML(-1)/□D32ML(-1)/□D16DS(-1)) — 74
Relay Output Units (GT1-ROS16/ROP08/FOP08) — 81
Analog I/O Units (GT1-AD/DA) — 83
Temperature Input Unit (GT1-TS04□) — 85

Intelligent Slaves (PLC Units)

Programmable Slaves (CPM2C-S1□OC-DRT) — 88

Intelligent Slaves

Digital Sensor Communications Unit (E3X-DRT21-S VER.3) — 92
DeviceNet ID Slave (V600-HAM42-DRT) — 94
DeviceNet ID Slave (V680-HAM42-DRT) — 95
DeviceNet-compliant Digital Indicator (K3HB-□-DRT) — 96
DeviceNet -compliant Digital Controllers (E5AR-DRT/E5ER-DRT) — 100
DeviceNet Communications Unit for Modular Temperature Controllers (EJ1-DRT) — 104
Multi-function Compact Inverter MX2-Series V1 type DeviceNet Communication Unit 3G3AX-MX2-DRT-E — 107
High-function General-purpose Inverter RX-Series V1 type DeviceNet Communication Unit 3G3AX-RX-DRT-E — 108

CIP Safety on DeviceNet System 111

Safety Network Controller NE0A-SCPU01 — 112
Safety Network Controller NE1A-SCPU Series — 117
Safety I/O Terminal DST1 Series — 122
Network Configurator WS02-CFSC1-E — 125

Configurator and Software 127

DeviceNet Configurator Ver.2.□ WS02-CFDC1-E — 128
DeviceNet Configurator PC Card (Software Included) 3G8E2-DRM21-V1 — 128
DeviceNet Analyzer WS02-ALDC1 — 130
NX-Server WS02-NX□C1 — 131
Device Inspector WS02-DIPC1 — 132

Peripheral Devices 133

General-purpose Peripheral Devices — 134
Peripheral Devices for Environment-resistive Slaves — 144

Ordering Information 159

Ordering Information — 160

Information 175

Related Manuals — 176
Introduction of the Switch Mode Power Supply — 177

Windows is registered trademarks of Microsoft Corporation in the USA and other countries.
DeviceNet™, EtherNet/IP™, CompoNet™ and CIP Safety™ are the trademarks of ODVA.
Other company names and product names in this document are the trademarks or registered trademarks of their respective companies.

Linking the World. A Global Open Network Greater Wiring Reduction, Standardization, on a Global Scale.

What Is DeviceNet?

DeviceNet is a field network that easily performs mutual connections between control devices, such as PLCs, computers, and sensors, as well as data devices, such as barcode readers and RFID Systems. DeviceNet is a standardized network that enables intelligent control of field devices and improves system productivity.

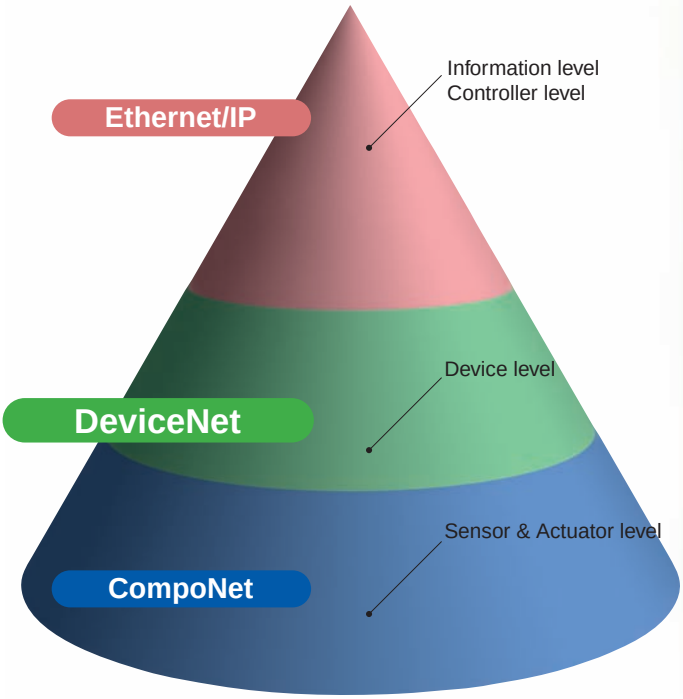

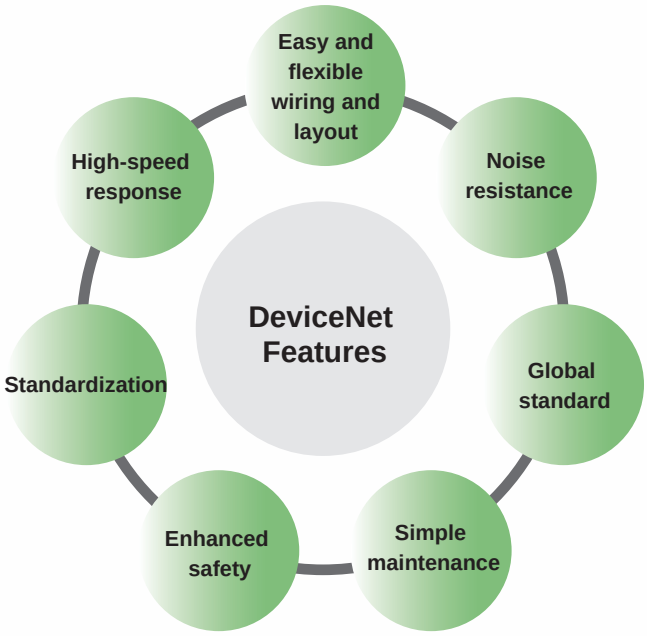

Used Worldwide.
and IT Technology at Manufacturing Sites

Superior installation performance enables easy and flexible wiring and layout.

DeviceNet covers a wide array of FA applications, ranging from the sensor or device level to the controller level. With its superior installation performance, DeviceNet easily achieves mutual connections between sensors and other control devices in one network as well as reducing costs and shortening lead time in many aspects of manufacturing, ranging from design and manufacture of equipment and lines to installation, operation, and maintenance.

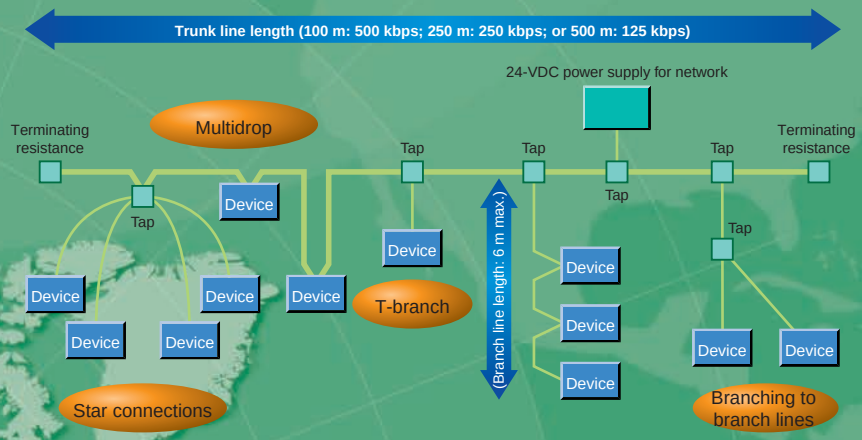

Accelerating the Global Standardizations Required by Industry in This Age of Global Manufacturing

DeviceNet has been the leader in standardization required for this age of borderless manufacturing as a standard for a variety of countries and industrial organizations, such as with standard sensor bus certification by the SEMI industrial association and compliance with IEC, an international global standard. Equipment and lines at manufacturing sites overseas can be constructed and operated in the same way as at sites in Japan without the need for training on wiring rules or detailed explanations.

IEC 62026-3

SEMI E54.4-0997

ISO 11898

CENELEC EN50325-2

GB T18858.2-2002

Support for Creating Maintenance and Safety Systems

Support is provided for creating maintenance systems that provide failure prediction as preventive maintenance to reduce equipment downtime, which is a constant issue at manufacturing sites. Page F-6

Using DeviceNet lets you create safety control networks and program logic. Monitoring with safety controls makes maintenance easier. Page F-8

DRT2-series Smart Slaves are Intelligent for Your Networks from Installation

OMRON DRT2-series Smart Slaves decrease total costs and reduce work when used in a variety of manufacturing site applications, such as maintenance and quality control. The Slave Units monitor the network's power supply voltage and communications errors, which can be easily read using Support Software. In addition, the number of ON/OFF operations and total operating time of the devices wired to the slave are counted at the slave, which enables providing notification when maintenance is required.

Machine Operation Monitored by Slaves

Smart Functions

Smart Measuring

The Slave Unit represents machine operating time and operational changes as data, enabling monitoring without increasing the load between controllers.

Smart Counting

By counting the number of ON/OFF operations and the total operating time, the Slave Unit can provide notification when maintenance is required.

Easy-to-view Display

DeviceNet Configurator

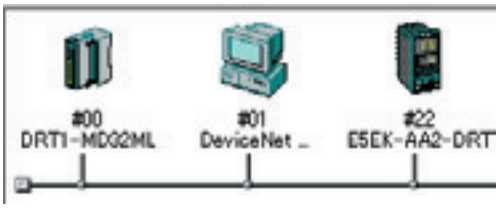

Operating time, contact operation counter

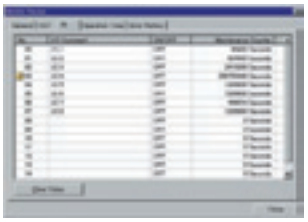

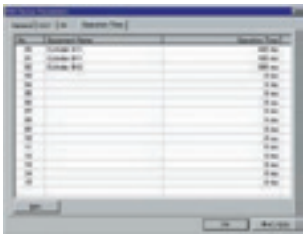

Improve Maintenance Efficiency

The Slave can hold comments, allowing quick identification of fault locations and faulty devices.

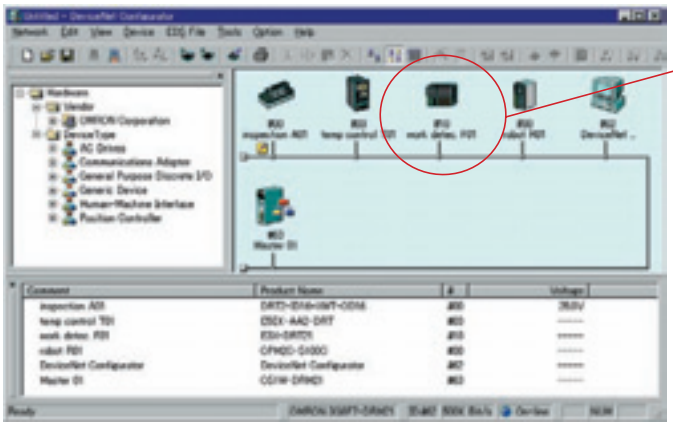

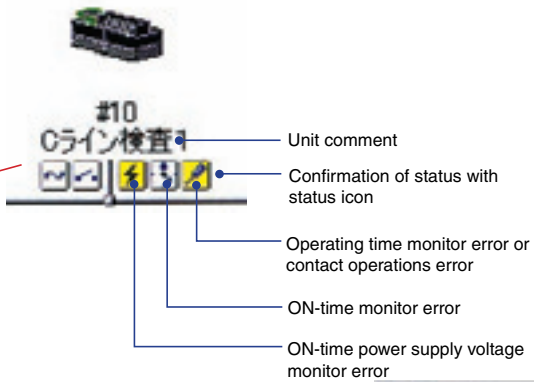

Information monitoring for each Slave

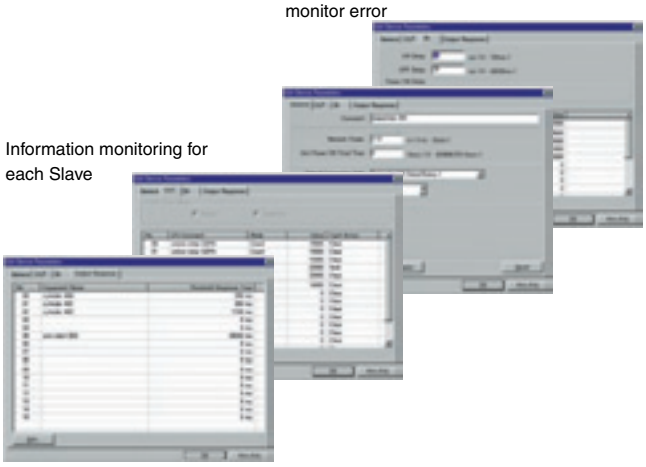

Slaves with Powerful Support to Maintenance

DeviceNet™

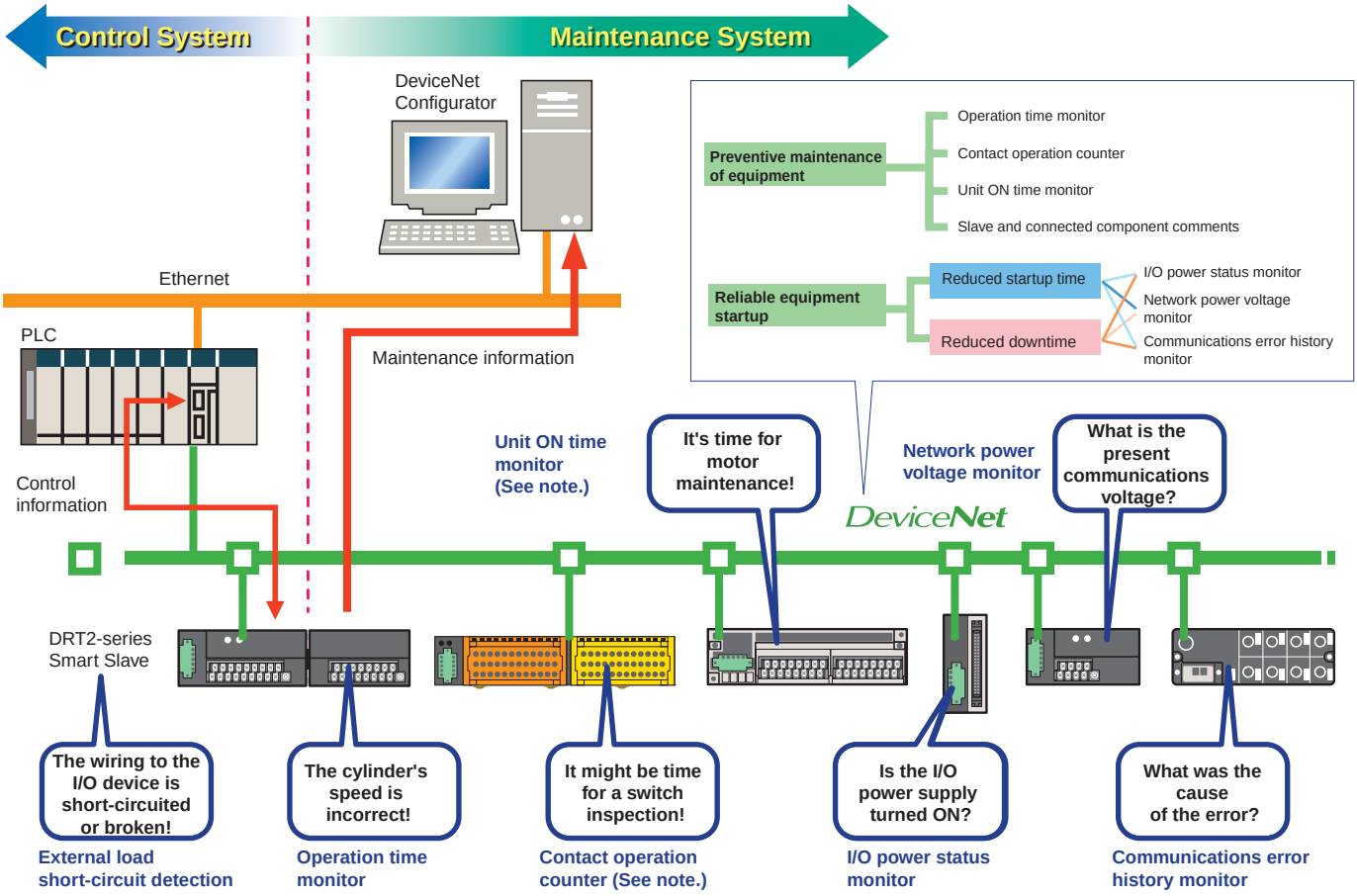

Note: The contact operation counter function and the unit ON time monitor function cannot be used simultaneously.

Using OMRON Temperature Input Terminals for Maintenance

Failure Prediction and Maintenance

If prolonging the time it takes to reach a certain temperature may degrade equipment:

The operating time of a preset temperature range is counted in 1-s units.

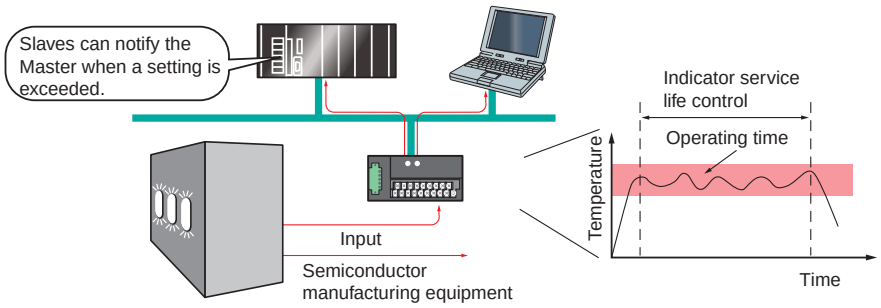

The peaks or valleys of temperature inputs that change in a regular pattern are counted to predict when devices operating with severe temperature swings are due for maintenance.

Short Startup

If it takes too long to modify the ladder program on the Master when a Temperature Sensor is replaced:

Slaves internally convert display values to temperature input values so the Controller program no longer has to be modified to perform this task.

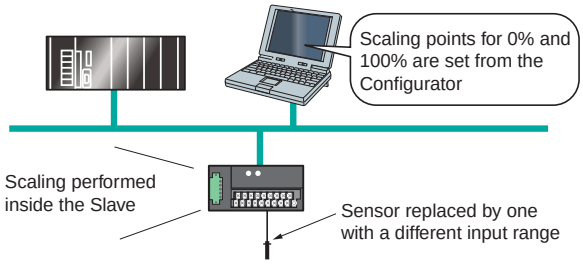

Complies with the Highest Safety Standards in th

The CIP Safety on DeviceNet System conforms to IEC 61508 SIL3 for functional safety, and EN 954-1 Safety Category 4 for machine safety, complying with the world's highest level of safety standards.

IEC 61508 SIL 3

Safety circuits must be able to function to provide safety at anytime. Conversely, the degree of lack of safety is used as the indicator. In IEC 61508, safety is defined as the Probability of Failure per Hour, or PFH. Based on this, the SIL (Safety Level) is classified into four levels. SIL 3 indicates a probability of dangerous failure of once in 1,000 years, which is the highest level in machine safety.

EN 954-1 Safety Category 4

EN standards evaluate the level of machine risk and require the incorporation of risk minimization measures. In EN 954-1, five safety categories have been established, with Safety Category 4 indicating designs that require the highest safety design level. This category is demanded for machines with the highest level of danger, wherein "serious injury (severed limbs, death, etc.) will occur frequently, with little chance of escaping danger." This category demands that a single fault (failure) in any part of the machine, or a series of faults, will not lead to loss of the machine's safety functions.

Programmable Safety Circuits

↓

More efficient designing and modification

Compatible with DeviceNet Open Network

↓

Coordination with standard controls is easy through DeviceNet

CIP Safety™

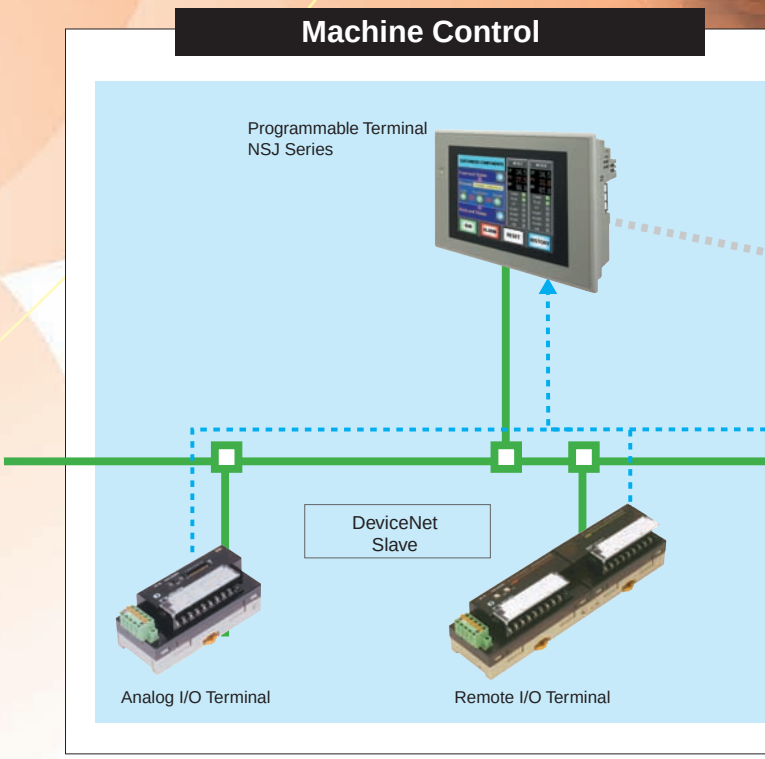

DeviceNet™

Safety Control

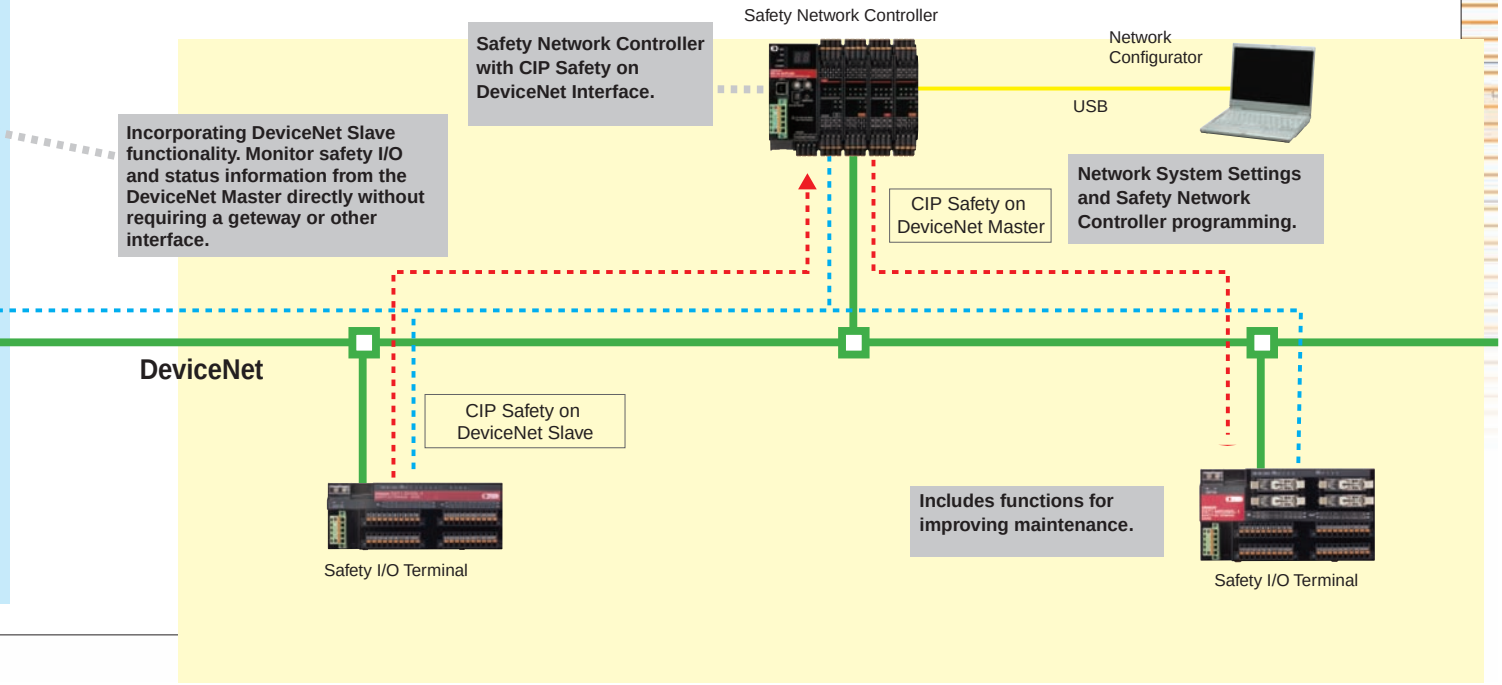

Through Our High Reliability and Application OMRON Provides a Wide Range of DeviceNet Selection for Your Worksite.

DeviceNet is a global open multi-vendor network that is spreading worldwide.
A wide variety of DeviceNet devices are provided by many vendors.
Having recognized the superior flexibility of DeviceNet for FA and its role as a global standard, OMRON provides a broad lineup of compatible devices.
In the future, OMRON will continue to enhance solutions using DeviceNet while further developing information technology and open networks.

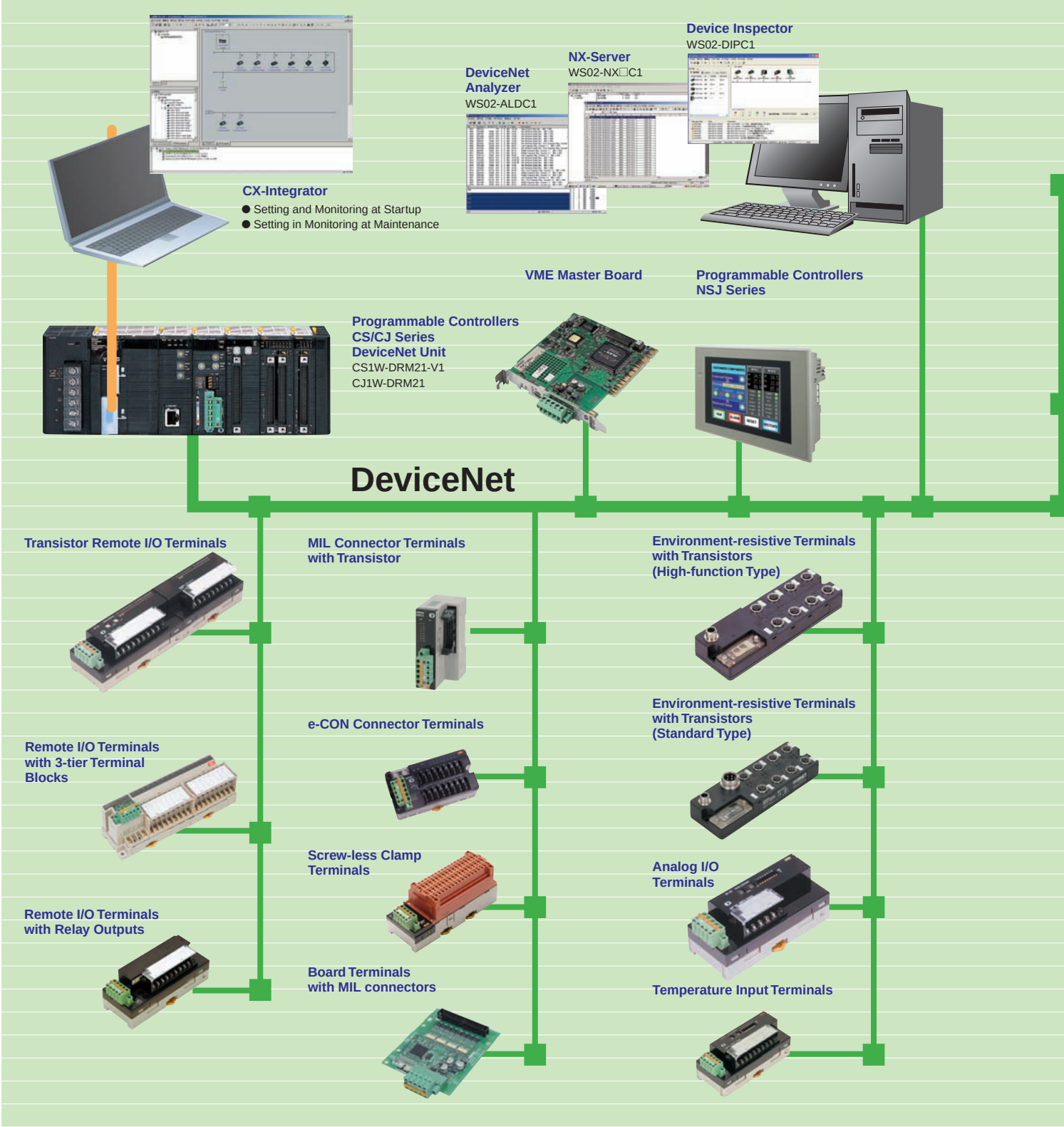

Know-how Refined at FA Sites, Devices to Enable the Ideal DeviceNet™

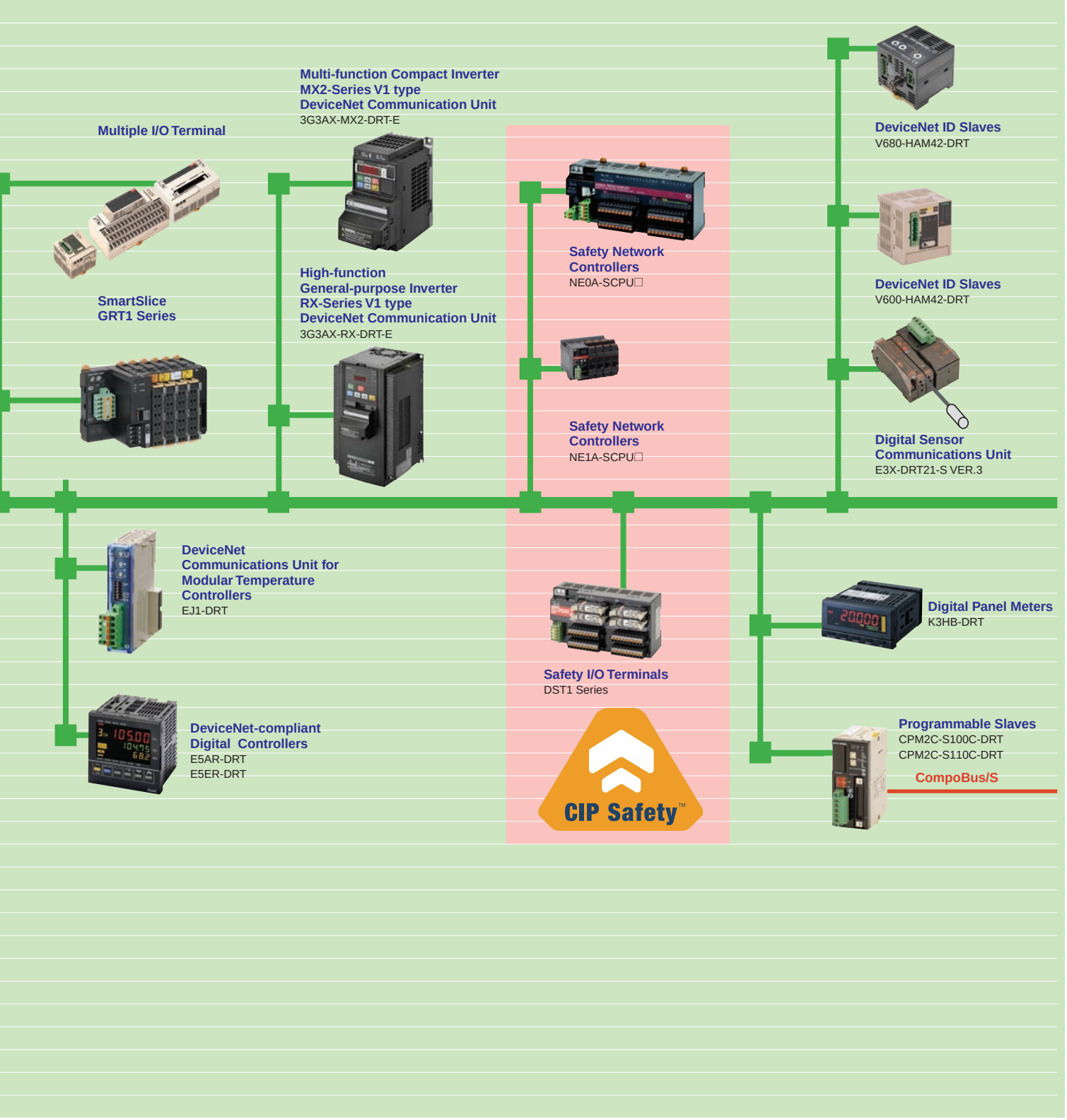

DeviceNet™ Product Lineup

Masters

■ DeviceNet Unit for CJ Series

P. 2

CJ1W-DRM21

■ DeviceNet Unit for CS Series

P. 3

CS1W-DRM21-V1

■ Programmable Controllers NSJ Series

P. 4

NSJ□-T□□1(B)-G5D

■ VME Master Board

P. 7

3G8F7-DRM21

Slaves

DRT2 Smart Slaves

■ Transistor Remote I/O Terminal

P. 18

DRT2-ID16/OD16(-1)
DRT2-MD16(-1)
DRT2-ID08/OD08(-1)
I/O Expansion Unit
XWT-ID16/OD16(-1)
XWT-ID08/OD08(-1)

■ Remote I/O Terminals with 3-tier Terminal Blocks

P. 28

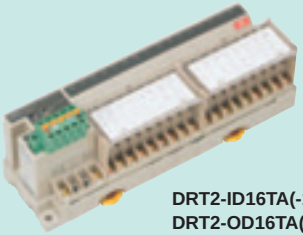

DRT2-ID16TA(-1)
DRT2-OD16TA(-1)
DRT2-MD16TA(-1)

■ Remote I/O Terminals with Relay Outputs

P. 26

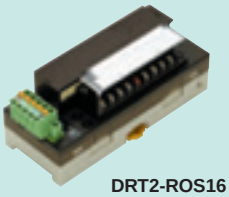

DRT2-ROS16

■ MIL Connector Terminals with Transistor

P. 34

DRT2-ID32ML(-1)
DRT2-OD32ML(-1)
DRT2-MD32ML(-1)
DRT2-ID16ML(-1)
DRT2-ID16MLX(-1)
DRT2-OD16ML(-1)
DRT2-OD16MLX(-1)

■ e-CON connector Terminals

P. 31

DRT2-ID16S(-1)
DRT2-MD16S(-1)

■ Screw-less Clamp Terminals with Transistor

P. 43

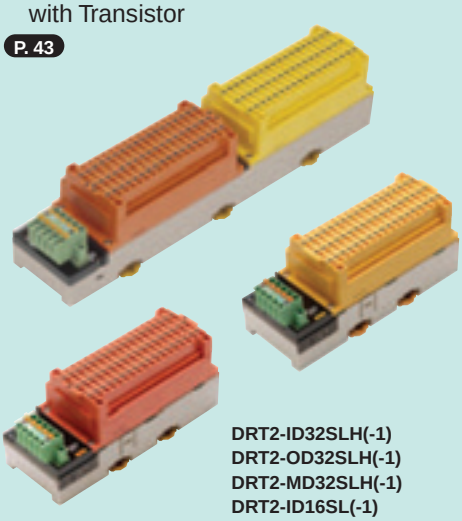

DRT2-ID32SLH(-1)
DRT2-OD32SLH(-1)
DRT2-MD32SLH(-1)
DRT2-ID16SL(-1)
DRT2-ID16SLH(-1)
DRT2-OD16SL(-1)
DRT2-OD16SLH(-1)

■ Board Terminals with MIL connectors

P. 39

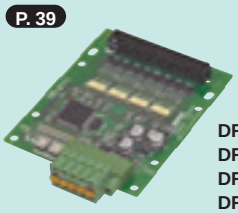

DRT2-ID32B(-1)
DRT2-OD32B(-1)
DRT2-MD32B(-1)
DRT2-ID32BV(-1)
DRT2-OD32BV(-1)
DRT2-MD32BV(-1)

■ Temperature Input Terminals

P. 60

DRT2-TS04T
DRT2-TS04P

■ Analog I/O Terminals

P. 57

DRT2-AD04
DRT2-AD04H

DRT2-DA02

■ Environment-resistive Terminals with Transistors (High-function Type)

P. 48

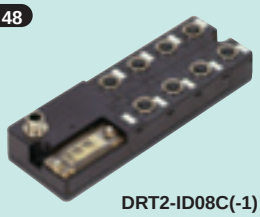

DRT2-ID08C(-1)
DRT2-OD08C(-1)
DRT2-HD16C(-1)

■ Environment-resistive Terminals with Transistors (Standard Type)

P. 51

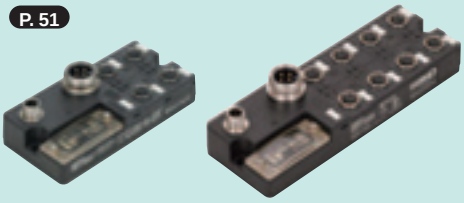

DRT2-ID04CL(-1)
DRT2-OD04CL(-1)
DRT2-ID08CL(-1)
DRT2-OD08CL(-1)

DRT2-MD16CL(-1)
DRT2-HD16CL(-1)
DRT2-WD16CL(-1)

DeviceNet™ Product Lineup

Slaves

GRT1 Smart Slaves

■ DeviceNet Communications Unit

P. 68

GRT1-DRT

■ SmartSlice I/O Units

P. 70

GRT1-ID4(-1)
GRT1-OD4(-1)
GRT1-ID8(-1)
GRT1-OD8(-1)
GRT1-ROS2
GRT1-AD2
GRT1-DA2C
GRT1-DA2V
GRT1-TS2P
GRT1-TS2PK
GRT1-CT1

MULTIPLE I/O TERMINAL Series

■ Communications Unit

P. 73

DRT1-COM

■ Digital I/O Units

P. 74

GT1-ID16(-1)
GT1-OD16(-1)

GT1-ID32ML(-1)
GT1-OD32ML(-1)

GT1-ID16MX(-1)
GT1-OD16MX(-1)

GT1-ID16ML(-1)
GT1-ID16DS(-1)
GT1-OD16ML(-1)
GT1-OD16DS(-1)

■ Relay Output Units

P. 81

GT1-ROP08
GT1-FOP08

GT1-ROS16

■ Analog I/O Units

P. 83

GT1-AD08MX
(connector)

GT1-DA04MX
(connector)

GT1-AD04
(terminal
block)

GT1-DA04
(terminal
block)

■ Temperature Input Units

P. 85

GT1-TS04T

GT1-TS04P

PLC Intelligent Slaves

■ Programmable Slaves

P. 88

CPM2C-S100C-DRT
CPM2C-S110C-DRT

Slaves

Intelligent Slaves

■ Digital Sensor Communications Unit

P. 92

E3X-DRT21-S VER.3

■ DeviceNet ID Slave

P. 94

V600-HAM42-DRT

■ DeviceNet ID Slave

P. 95

V680-HAM42-DRT

■ DeviceNet-compliant Digital Indicator

P. 96

K3HB-□-DRT

■ DeviceNet Communications Unit for Modular Temperature Controllers

P. 104

EJ1-DRT

■ DeviceNet-compliant Digital Controllers

P. 100

E5AR-DRT

E5ER-DRT

■ Multi-function Compact Inverter MX2-Series V1 type DeviceNet Communication Unit

P. 107

3G3AX-MX2-DRT-E

■ High-function General-purpose Inverter RX-Series V1 type DeviceNet Communication Unit

P. 108

3G3AX-RX-DRT-E

DeviceNet™ Product Lineup

Configurators and Software

Configurators

■ DeviceNet Configurator Ver.2.□

P. 128

WS02-CFDC1-E

■ PC Card DeviceNet Configurator (with software)

P. 128

3G8E2-DRM21-V1

Analysis Software

■ DeviceNet Analyzer

P. 130

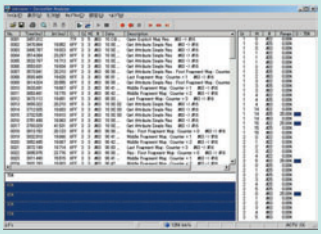

WS02-ALDC1

Monitor Software

■ NX-Server

P. 131

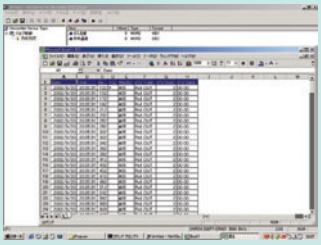

WS02-NX□C1

Diagnostic Tools

■ Device Inspector

P. 132

WS02-DIPC1

Safety

■Safety Network Controllers

P. 112

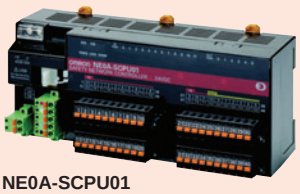

NE0A-SCPU01

P. 117

NE1A-SCPU02

NE1A-SCPU01(-V1)

■ Safety Network Configurator

P. 125

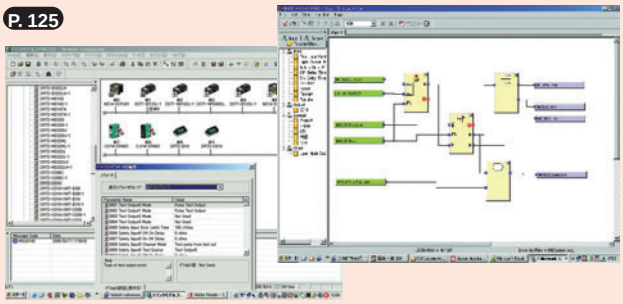

WS02-CFSC1-E

■ Safety I/O Terminals

P. 122

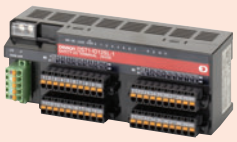

DST1-ID12SL-1
DST1-MD16SL-1
DST1-XD0808SL-1

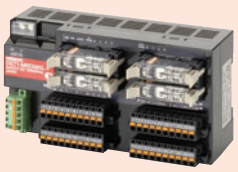

DST1-MRD08SL

CIP Safety™

Peripheral Devices

Standard Cables P. 134

■ T-branch Taps

Parallel Connectors with Screws DCN1-1C

Parallel Connectors with Screws DCN1-2C

Orthogonal Connectors with Screws DCN1-2R

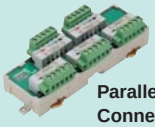

Parallel Connectors with Screws DCN1-3C

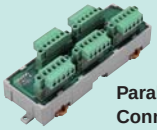

Parallel Connectors with Screws DCN1-4C

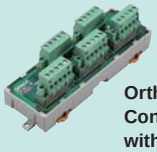

Orthogonal Connectors with Screws DCN1-4R

Parallel Connectors with Clamps DCN1-1NC

Parallel Connectors with Clamps DCN1-3NC

■ Connectors

Parallel Connector with Screws XW4B-05C1-H1-D

Multi-branch Parallel Connector with Screws XW4B-05C4-TF-D

Multi-branch Parallel Connector without Screws XW4B-05C4-T-D

Orthogonal Connector with Screws XW4B-05C1-V1R-D

Parallel Connector with Screw-less Clamps XW4G-05C1-H1-D

Multi-branch Parallel Connector with Screw-less Clamps XW4G-05C4-TF-D

■ Power Supply Tap

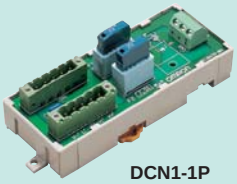

DCN1-1P

■ Terminal-block Terminator

DRS1-T

■ DeviceNet Standard Cables

Thin Cable DCA1-5C10(-B)

Thick Cable DCA2-5C10(-B)

DeviceNet™ Product Lineup

Peripheral Devices

Environment-resistive Peripheral Devices (M12 Thin Cable with Micro Connectors) P. 144

■ Shielded T-branch Tap Connector

DCN2-1

■ Shielded Connector Cables

DCA1-5CN□□W1

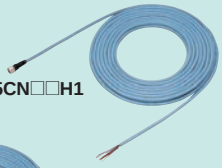

DCA1-5CN□□H1

DCA1-5CN□□F1

■ Shielded Assembly Connectors

XS2G-D5S7

XS2C-D5S7

■ Shielded Terminating Resistor

DRS2-1
DRS2-2

■ Shielded Panel-mounting Connectors

XS2P-D522-2

XS2M-D524-4

Environment-resistive Peripheral Devices (Smartclick Thin Cable with Micro Connectors) P. 145 Smartclick

■ Shielded T-branch Tap Connector

DCN2-1S

■ Shielded Connector Cables

DCA1-5CS□□W1

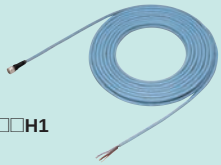

DCA1-5CS□□H1

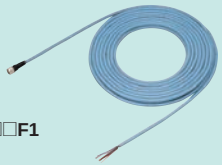

DCA1-5CS□□F1

■ Shielded Branching Relay Box

DCN2-S4C5H1

DCN2-S8C5H1

■ Shielded Terminating Resistor

DRS2-1S
DRS2-2S

Environment-resistive Peripheral Devices (7/8-16 UN Thick Cable with Mini Connectors) P. 146

■ Shielded T-branch Tap Connector

DCN3-11

DCN3-12

■ Shielded Connector Cables

DCA2-5CN□□W1

DCA2-5CN□□H1

DCA2-5CN□□F1

■ Panel-mounting Connectors

DCA2-5CNC5P1

DCA2-5CNC5M1

XS4M-D521-1

■ Shielded Terminating Resistor

DRS3-1

Network Specifications

DeviceNet Network Specifications

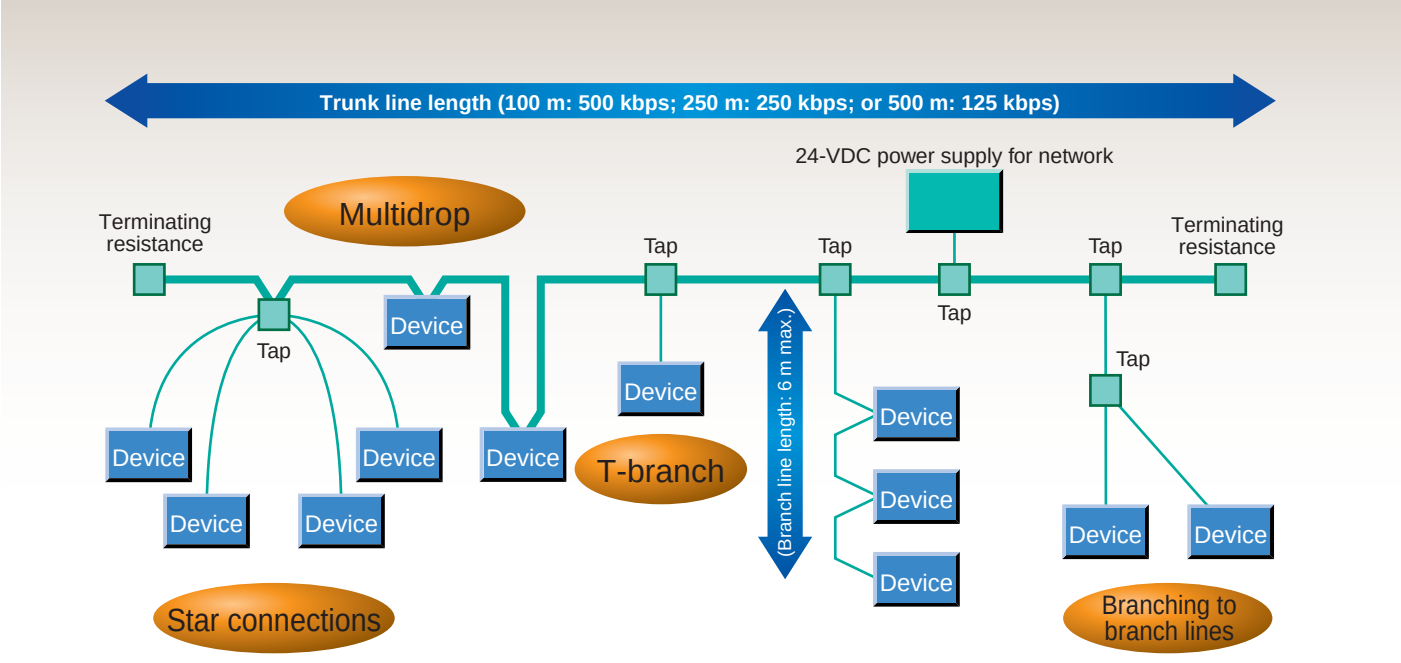

Communications Specifications

Item	Specification
Communication protocol	DeviceNet
Connection method (See note1.)	Multidrop and T-branch connections can be combined (for trunk lines and branch lines).
Baud rate	125, 250, or 500 kbps
Communication media	Special cable: 5-conductor cable (2 signal lines, 2 power lines and 1 shield) Special Flat cable: 4-conductor cable (2 signal lines, 2 power lines)
Communication distance	• Using a Special 5-wire Cable

Baud rate	Max. network length	Branch line length	Total branch line length
500 kbps	100 m max.	6 m max.	39 m max.
250 kbps	250 m max. (See note2.)	6 m max.	78 m max.
125 kbps	500m max. (See note2.)	6 m max.	156 m max.

• Using a Special 4-wire Cable

Baud rate	Max. network length	Branch line length	Total branch line length
500 kbps	75 m max.	6 m max.	35 m max.
250 kbps	150 m max.	6 m max.	48 m max.
125 kbps	265 m max.	6 m max.	135 m max.

Communications power supply	24 VDC (external)
Max. number of connectable nodes	64 Units (including Master Units, Slave Units and Configurator)

Note 1: Terminating resistance required on both ends of the trunk line.
2: These values apply to using Thick Cable on the trunk line. If Thin Cable is used, the value will be 100 m max.

MEMO

Master Unit

CJ-series DeviceNet Unit..... 2
CJ1W-DRM21

CS-series DeviceNet Unit..... 3
CS1W-DRM21-V1

Programmable Controllers NSJ Series..... 4
NSJ□-T□□1(B)-G5D

DeviceNet Board (PCI Board)..... 7
3G8F7-DRM21-E

CJ-series DeviceNet Unit

CJ1W-DRM21

A DeviceNet Unit for the NJ/CJ Series

- Allows control of up to 32,000 points (2,000 words) per master, and ensures a high degree of simultaneity between data.
- Can be used as both a master and a slave at the same time.
- Equipped with settings and monitor functions aimed at improving both design and startup efficiency. Achieve maximum performance by using in combination with a Configurator.
- Files of master and slave settings can be uploaded and downloaded using memory cards, allowing effective debugging and easier setup.

Ordering Information

Unit classification	Product name	Specifications	Communications	No. of unit numbers allocated	Current consumption (A)		Model
					5 V	24V	
CJ1 CPU Bus Unit	DeviceNet Unit 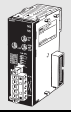	Equipped with Master and Slave functionality. Controls for up to 32,000 points per Master.	• Remote I/O Communications Master (fixed allocations or user-set allocations) • Remote I/O Communications Slave (fixed allocations or user-set allocations) • Message communications	1	0.29	-	CJ1W-DRM21

Master/Slave Specifications

Communications power supply voltage				11 to 25 VDC ✻1
Current consumption				Communications: 18 mA max. Internal circuit: 290 mA max.
Max. number of connectable slaves	Remote I/O, explicit message service			63 ✻2
Max. number of I/O points	Fixed allocations		When used as a master	2,048 points
			When used as a slave	32 points
	User-set allocations	Using allocated DM Area words	When used as a master	16,000 points
			When used as a slave	3,200 points
		Using Configurator	When used as a master	32,000 points
			When used as a slave	4,800 points
Number of allocated words	Fixed allocations		When used as a master	64 input and 64 output words Software switch/status area: 25 words
			When used as a slave	1 input word, 1 output word ✻3
	User-set allocations	Using allocated DM Area words	When used as a master	500 input and 500 output words Software switch/status area: 25 words
			When used as a slave	100 input and 100 output words ✻3 Software switch/status area: 25 words
		Using Configurator	When used as a master	500 input words x 2 blocks, 500 output words x 2 blocks Software switch/Status area: 25 words
			When used as a slave	100 input words x 1 blocks, 100 output words x 2 blocks ✻3 Software switch/Status area: 25 words
Message communications	Max. message length			542 bytes ✻4
Max. number of Units mountable to PLC	Fixed allocations			3
	User-set allocations			16
Weight				118 g

✻1. Refer to the *DeviceNet Operation Manual* (W267) for the communications power supply specifications.
✻2. The Device Unit uses a node, and so connection is possible to 63 slaves only.
✻3. When the DeviceNet is used as a slave, “input” and “output” respectively refer to input from the slave to the master and output from the master to the slave.
✻4. The maximum message length includes the command code when using the CMND instruction. (SendCmd instruction with NJ-series controller)
Note: When using with the Machine Automation Controller NJ Series, note the following points:
- Simple backup function cannot be used.
- DeviceNet configurator cannot be used. Use CX-Integrator.

General Specifications

The specifications conform to the CJ Series. Refer to the *CJ Series Catalog* (P052) for details on CJ-series specifications.
CJ2 Series Catalog (P059) for details on CJ2-series specifications.

Dimensions

31 x 90 x 65 mm (W x H x D)

CS-series DeviceNet Unit

CS1W-DRM21-V1

A DeviceNet Unit for the CS Series

- Allows control of up to 32,000 points (2,000 words) per master, and ensures a high degree of simultaneity between data.
- Can be used as both a master and a slave at the same time.
- Equipped with settings and monitor functions aimed at improving both design and startup efficiency. Achieve maximum performance by using in combination with a Configurator.
- Files of master and slave settings can be uploaded and downloaded using memory cards, allowing effective debugging and easier setup.

Ordering Information

Unit classification	Product name	Specifications				No. of unit numbers allocated	Current consumption (A)		Model
		Communications Cable	Communications	Redundant communications	Max. No. of Units mounted to 1 CPU Unit		5V	26V	
CS1 CPU Bus Unit	DeviceNet Unit	DeviceNet Cable	• Remote I/O Communications Master (fixed allocations or user-set allocation) • Remote I/O Communications Slave (fixed allocation or user-set allocation) • Message communications	Not supported.	16	1	0.29	-	CS1W-DRM21-V1

Master/Slave Specifications

Communications power supply voltage				11 to 25 VDC ✻1
Current consumption				Communications: 30 mA max. Internal circuit: 290 mA max.
Max. number of connectable slaves	Remote I/O, explicit message service			63 ✻2
Maximum I/O points	Fixed allocations		When used as a master	2,048 points
			When used as a slave	32 points
	User-set allocations	Using allocated DM Area words	When used as a master	16,000 points
			When used as a slave	3,200 points
		Using Configurator	When used as a master	32,000 points
			When used as a slave	4,800 points
Number of allocated words	Fixed allocations		When used as a master	64 input and 64 output words Software switch/status area: 25 words
			When used as a slave	input word, 1 output word ✻3
	User-set allocations	Using allocated DM Area words	When used as a master	500 input and 500 output words Software switch/status area: 25 words
			When used as a slave	100 input and 100 output words ✻3 Software switch/status area: 25 words
		Using Configurator	When used as a master	500 input words x 2 blocks, 500 output words x 2 blocks Software switch/Status area: 25 words
			When used as a slave	100 input words x 1 blocks, 100 output words x 2 blocks Software switch/Status area: 25 words
Max. message length				542 bytes ✻4
Max. number of Units mountable to PLC	Fixed allocations			3
	User-set allocations			16
Weight				169 g

✻1. Refer to the *DeviceNet Operation Manual* (W267) for the communications power supply specifications.
✻2. The Device Unit uses a node, and so connection is possible to 63 slaves only.
✻3. When the DeviceNet is used as a slave, “input” and “output” respectively refer to input from the slave to the master and output from the master to the slave.
✻4. The maximum message length includes the command code when using the CMND instruction.

General Specifications

The specifications conform to the CS Series. Refer to the *CS Series Catalog* (P047) for details on CS-series specifications.

Dimensions

34.5 X 130 X 111.2 mm (W X H X D)

Programmable Controllers NSJ Series

NSJ□-T□□1(B)-G5D

The NSJ-series Controller Completely Integrates a PT and Controller into One Package

- A PT, Controller CPU Unit, and DeviceNet Master Unit are completely integrated.
- Super space-saving design.
- Easily transfer screens and ladder programming using a commercially available USB cable.
- No cable connections or complicated communications settings required. Start operation simply by turning ON the power supply.
- Equipped with troubleshooter for the Controller and DeviceNet Master as a standard feature.

Ordering Information

■ Controllers

Name	Controller Section	Display Section		Ethernet port	Model ✻
		Display device	Resolution		
NSJ Series	No. of I/O points: 1,280 Program capacity: 60K steps Data memory capacity: 128K words (DM: 32K words, EM: 32K words x 3 banks)	5.7-inch color High-luminance TFT LCD	320 X 240 (QVGA)	10/100Base-T	**NSJ5-TQ11(B)-G5D**
		8.4-inch color TFT LCD	640 X 480 (VGA)		**NSJ8-TV01(B)-G5D**
		10.4-inch color TFT LCD			**NSJ10-TV01(B)-G5D**
		12.1-inch color TFT LCD	800 X 600 (SVGA)		**NSJ12-TS01(B)-G5D**

✻ (B) in the model number indicates that the color of the Controller frame is black.

■ Accessories and Expansion Units

Name		Specifications	Model
Expansion Units	**NSJ Controller Link Unit**	For increasing the number of Controller Link ports Same as the CJ1W-CLK21-V1 Controller Link Unit for the CJ Series.	**NSJW-CLK21-V1**
	NSJ Ethernet Unit	For increasing the number of Ethernet ports Same as the CJ1W-ETN21 Ethernet Unit for the CJ Series.	**NSJW-ETN21**
	NSJ I/O Control Unit	For adding CJ-series Expansion Racks. Same as the CJ1W-IC101 I/O Control Unit for the CJ Series.	**NSJW-IC101**
Options	**Memory Cards (for both Controller Section and Display Section)**	Flash memory: 128 MB	**HMC-EF183**
		Flash memory: 256 MB	**HMC-EF283**
		Flash memory: 512 MB	**HMC-EF583**
		Memory Card Adapter	**HMC-AP001**

■ Support Software

Product name	Specifications			Model	Standards
		Number of licenses	Media		
CX-One FA Integrated Tool Package Ver. 4.□	The CX-One is a package that integrates the Support Software for OMRON PLCs and components. CX-One runs on the following OS. Windows XP (Service Pack 3 or higher, 32-bit version) / Windows Vista (32-bit/64-bit version) / Windows 7 (32-bit/64-bit version) / Windows 8 (32-bit/64-bit version) / Windows 8.1 (32-bit/64-bit version) **Note:** Except for Windows XP 64-bit version. CX-One Ver.4.□ includes CX-Designer Ver.3.□ For details, refer to the CX-One catalog (Cat. No. R134).	1 licence ✻	DVD	**CXONE-AL01D-V4**	---

✻ Multi licenses are available for the CX-One (3, 10, 30, or 50 licenses).

Specifications

Model	Built-in ports					Display Section			
	USB port (Slave: For Support Software)	RS-232C port	DeviceNet port	Ethernet port	USB port (Host: For printer)	Display color	Field of view	Language	Standard screen data capacity
NSJ5-TQ11-G5D	1 port	3 ports • Display Section: Serial ports A, B • Controller Section: Serial port	1 port	10/100Base-T	None	256 colors (BMP/JPEG, 32,768 colors for images)	Right/left: ±70°, Top: 70°, Bottom: 50°	Eight languages ✻	60 MB
NSJ5-TQ11B-G5D									
NSJ8-TV01-G5D					1 port		Right/left: ±65°, Top: 50°, Bottom: 60°		
NSJ8-TV01B-G5D									
NSJ10-TV01-G5D							Right/left: ±60°, Top: 35°, Bottom: 65°		
NSJ10-TV01B-G5D									
NSJ12-TS01-G5D							Right/left: ±60°, Top: 45°, Bottom: 75°		
NSJ12-TS01B-G5D									

✻ Japanese, English, Chinese (traditional and simplified), Spanish, Italian, German, and French.

Dimensions

(Unit: mm)

NSJ12-TS01(B)-G5D
NSJ10-TV01(B)-G5D

With NSJW-CLK21-V1 Mounted

No Expansion Unit

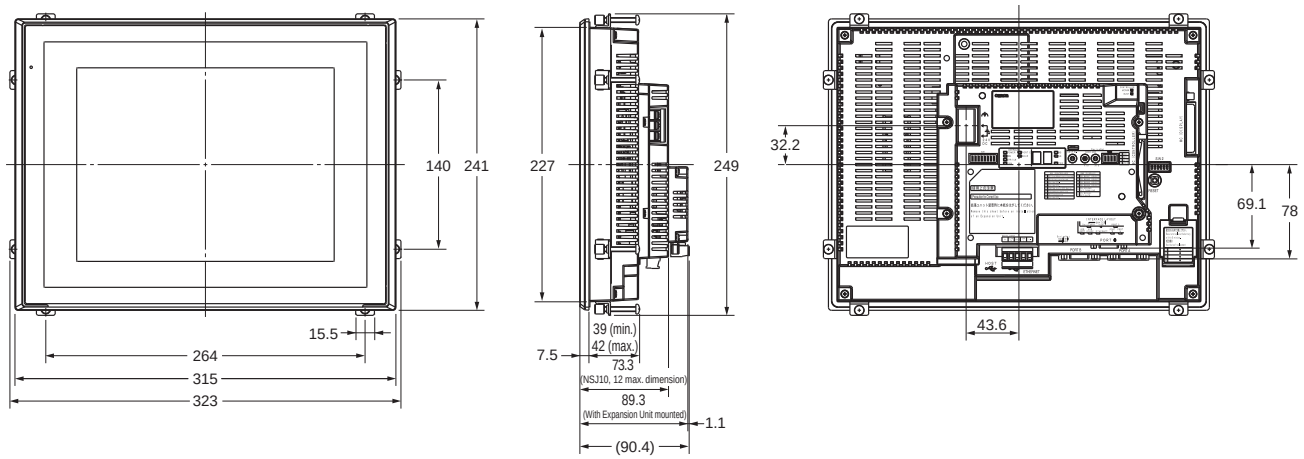

NSJ8-TV01(B)-G5D

With NSJW-CLK21-V1 Mounted

No Expansion Unit

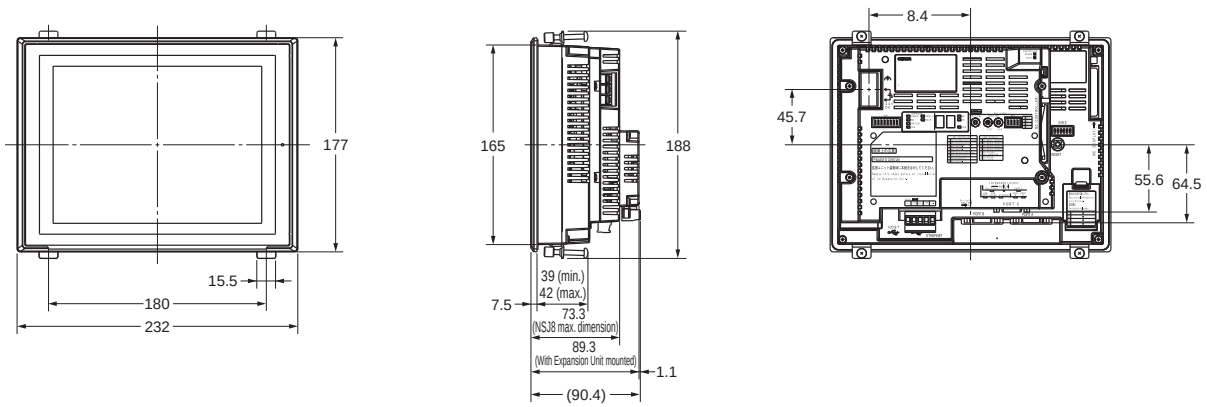

NSJ5-TQ11(B)-G5D

With NSJW-CLK21-V1 Mounted

No Expansion Unit

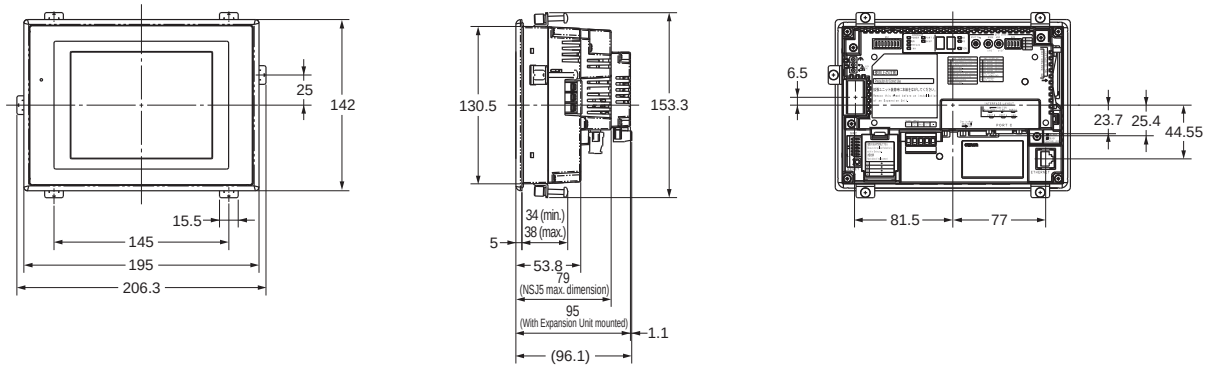

DeviceNet Board (PCI Board)

3G8F7-DRM21-E

PCI Bus DeviceNet Board

- Perform control using up to 25,200 bytes per master.
  Up to 400 bytes of I/O points per slave (Inputs: 200 bytes, Outputs: 200 bytes)
- Master and slave functions are included to enable simultaneous operation.
- DeviceNet Slave Data I/O
  I/O can be performed with slaves simply by reading from and writing to the corresponding memory for each slave.
- The Board can be operated in combination with DeviceNet Configurator software and NX-Server Analyzer software.

Ordering Information

Unit	I/O allocation	Model
PCI Board	25,200 bytes	3G8F7-DRM21-E

Master/Slave Specifications

Item		Product
Master Specifications	Max. I/O points	IN : 12,600 bytes (100,800 points) OUT : 12,600 bytes (100,800 points)
	Max. I/O points per Slave	IN : 200 bytes (1,600 points) OUT : 200 bytes (1,600 points)
	I/O connections	Up to two Poll, Bitstrobe, or COS/Cyclic connections can be used.
	Explicit messages	Up to 552 bytes
	Max. No. of connected slaves	63
Slave Specifications	Max. I/O points	IN : 200 bytes (1,600 points) OUT : 200 bytes (1,600 points)
	I/O connections	Up to two Poll, Bitstrobe, or COS/Cyclic connections can be used.

System Requirements

Item	Specifications
Computer	IBM PC/AT or compatible with PCI bus
OS	Windows 95, 98, NT4.0, 2000, XP, and 7
Available hard disk space	5 MB min.
Memory	32 MB min.
MPU	Pentium 166-MHz processor or better
Language	Microsoft Visual C++ Ver.6.0 (Include Service Pack3)

Note: At least one CD-ROM drive is required to install the drivers and software.

MEMO

Smart Slaves DRT2 Series

Smart Slaves DRT2 Series 10

- DRT2-series Smart Slave Features
- Configurator (Ver. 2.20 or Later) Maintenance Window
- Functions Supported by Smart Slaves
- Smart Slave Functions

Transistor Remote I/O Terminals 18

DRT2-□D08(-1)/□D16(-1)

Expansion Units 22

XWT-ID08(-1)/OD08(-1)/ID16(-1)/OD16(-1)

Remote I/O Terminal with Relay Outputs 26

DRT2-ROS16

Transistor Remote I/O Terminals with 3-tier Terminal Blocks 28

DRT2-□D16TA(-1)

e-CON Connector Terminals 31

DRT2-□D16S(-1)

MIL Connector Terminals with Transistors 34

DRT2-□D32ML(-1)/□D16ML(-1)

Board Terminals with MIL Connector 39

DRT2-□D32B(-1)/□D32BV(-1)

Screw-less Clamp Terminals with Transistors 43

DRT2-□D16SL(H)(-1)/□D32SLH(-1)

Environment-resistive Terminals with Transistors (High-function Type) 48

DRT2-□D08C(-1)/□D16C(-1)

Environment-resistive Terminals with Transistors (Standard Type) 51

DRT2-□D04CL(-1)/□D08CL(-1)/□D16CL(-1)

Analog I/O Terminals 57

DRT2-AD04(H)/DA02

Temperature Input Terminals 60

DRT2-TS04□

Smart Slaves DRT2 Series

In addition to the standard control functions, the DRT2-series Smart Slaves can collect a wide variety of manufacturing plant information and serve as key components in maintenance and quality control systems.

DRT2-series Smart Slave Features

The DRT2-series Smart Slaves do not just handle the ON/OFF signals of I/O devices; they can accumulate a variety of information to improve the operating efficiency of the equipment. A maintenance system can be constructed that is separate from the control system. The side-by-side control system/maintenance system configuration allows the existing DeviceNet wiring to be used, reduces the customer's equipment setup time, reduces the downtime in the event of a problem, and provides preventative maintenance capabilities.

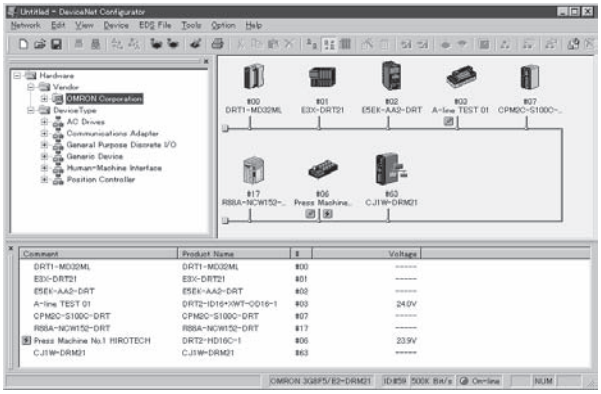

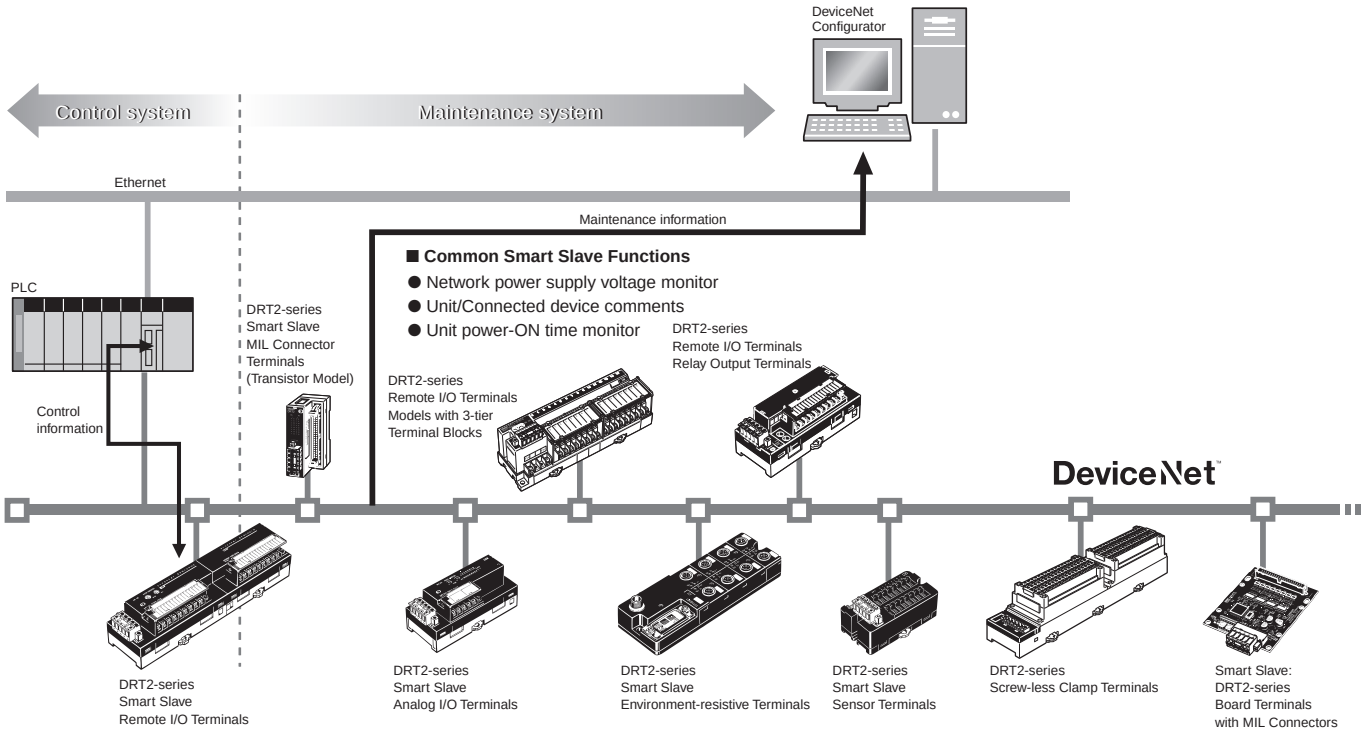

Reduce Setup Time

- Network power supply monitor function
- Input filter function
- Power-ON inrush current protection function
- Communications speed auto-detect function
- Scaling function
- User compensation function
- Cumulative counter
- Moving average processing function
- Number of A/D conversion points (conversion cycle) setting
- Peak/bottom hold function
- Top/valley hold function
- Percentage change calculation function

Reduce Downtime

- Unit comments function
- Connected device comments function
- I/O power supply monitor function
- Sensor power supply short-circuit detection function
- External load short-circuit detection function
- Disconnected sensor detection function

Improve Maintenance

- Operation time monitor function
- Contact operations counter *
- Unit conduction time monitor function
- Total ON time monitor function *
- Network power supply voltage monitor function
- Communications error log function
- Last maintenance date
- Comparator function
- Selectable output value after error

✻ The number of contact operations monitor function and the cumulative ON time monitor function cannot be used simultaneously for the same contact.

Configurator (Ver. 2.20 or Later) Maintenance Window

Various equipment information can be monitored from the following Configurator window (Ver. 2.20 or later) through DRT2-series Smart Slaves.

● Maintenance Mode Window

Maintenance information refresh icon
Reads the current maintenance information.

Alarm indicator icon

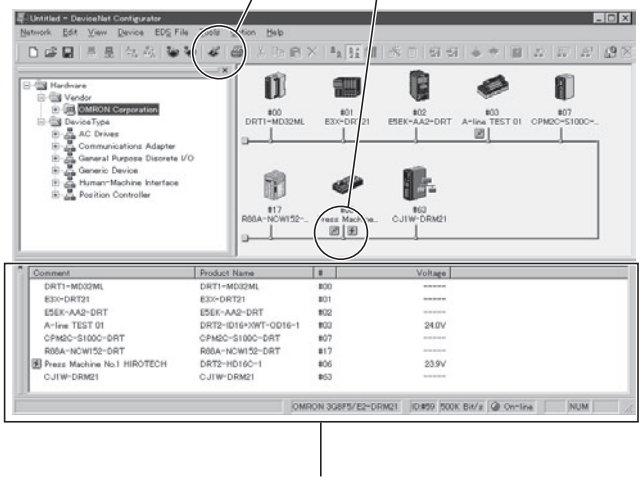

Maintenance information window

● Individual Slave's Maintenance Information Window

A DRT2-series Smart Slave's maintenance information window can be displayed by double-clicking the Slave's icon if an alarm indicator appears next to the Slave's icon.

Maintenance information
Displays current maintenance information.

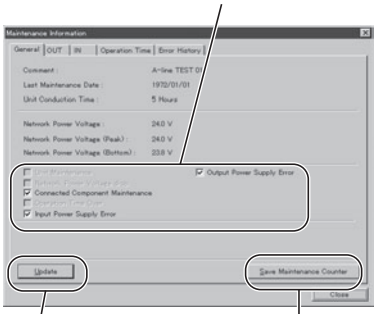

Refreshes the current Slave's maintenance information

A Smart Slave's maintenance counters can be stored in flash memory. The "number of contact operations" count is normally stored every 6 minutes, so up to 6 minutes of data may be lost depending on when the power is turned OFF.

Depending on the maintenance information that has been generated, more details can be viewed by clicking the **OUT** tab, **IN** tab, or **Operation Time** tab.

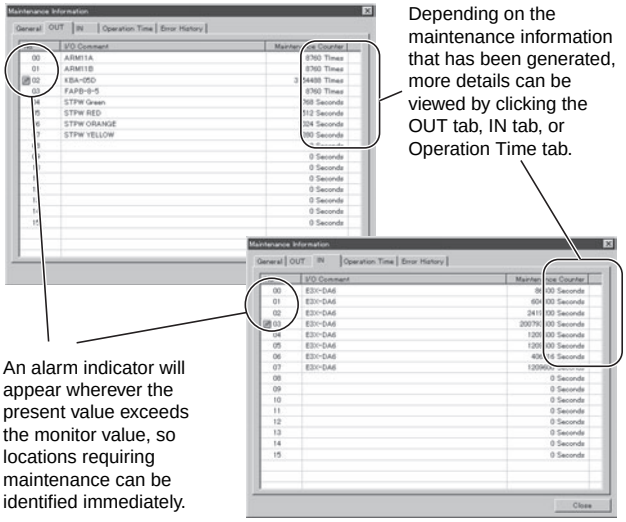

Depending on the maintenance information that has been generated, more details can be viewed by clicking the OUT tab, IN tab, or Operation Time tab.

An alarm indicator will appear wherever the present value exceeds the monitor value, so locations requiring maintenance can be identified immediately.

Functions Supported by Smart Slaves

OK: Function supported, ---: Function not supported.

Function	General Slaves						
	Remote I/O Terminals						
	Transistors			Relays	Transistors with 3-tier terminal block		
	Input	Output	I/O	Output	Input	Output	I/O
Operation time monitor	OK (Input+Output only) ✻1				OK		
Contact operation counter	OK						
Unit conduction time monitor	OK						
Total ON time monitor	OK						
Unit comments	OK						
Connected device comments	OK						
Network power supply voltage monitor	OK						
I/O power supply monitor	OK			---	OK		
Communications error log monitor	OK						
Input filter	OK	---	OK	---	OK	---	OK
Power-ON inrush current protection	OK	---	OK	---	OK	---	OK
Sensor power supply short-circuit detection	---						
Disconnected sensor detection	---						
External load short-circuit detection	---						
Disconnected sensor detection	---						
Removable terminal block	OK						
Communications speed auto-detect	OK						
No need to wire Unit power supply	OK						
No need to wire input device power supply	---						
Expansion via Expansion I/O Units	OK ✻2				---	---	---
Scaling	---						
User compensation	---						
Last maintenance date	OK						
Cumulative counter	---						
Moving average processing	---						
Number of A/D conversion points (conversion cycle) setting	---						
Peak/bottom hold	---						
Top/valley hold	---						
Percentage change calculation	---						
Comparator	---						
Selectable output value after error	---						

✻1. The operation time monitor cannot be used with the DRT2-□D08(-1).
✻2. Expansion Units cannot be added with the DRT2-□D08(-1) or DRT2-MD16(-1).

Notice: The contact operation counter function and the total ON time monitor function cannot be used simultaneously for the same contact.

OK: Function supported, ---: Function not supported.

Function	General Slaves				
	Connector Terminals				
	e-CON Connector		Board Terminals with MIL Connector		
	Input	I/O	Input	Output	I/O
Operation time monitor	---	OK	OK		
Contact operation counter	OK				
Unit conduction time monitor	OK				
Total ON time monitor	OK				
Unit comments	OK				
Connected device comments	OK				
Network power supply voltage monitor	OK				
I/O power supply monitor	---		OK		
Communications error log monitor	OK				
Input filter	OK		OK	---	OK
Power-ON inrush current protection	OK		OK	---	OK
Sensor power supply short-circuit detection	OK		---		
External load disconnection detection	---				
External load short-circuit detection	---	OK	---		
Disconnected sensor detection	---				
Removable terminal block	---				
Communications speed auto-detect	OK				
No need to wire Unit power supply	OK				
No need to wire input device power supply	OK		---		
Expansion via Expansion I/O Units	---				
Scaling	---				
User compensation	---				
Last maintenance date	OK				
Cumulative counter	---				
Moving average processing	---				
Number of A/D conversion points (conversion cycle) setting	---				
Peak/bottom hold	---				
Top/valley hold	---				
Percentage change calculation	---				
Comparator	---				
Selectable output value after error	---				

Notice: The contact operation counter function and the total ON time monitor function cannot be used simultaneously for the same contact.

OK: Function supported, ---: Function not supported.

Function	General Slaves						
	Screw-less clamp terminals						
	DRT2-□D16SLH (Detection function)		DRT2-□D16SL (No detection function)		DRT2-□D32SLH (Detection function)		
	Input	Output	Input	Output	Input	Output	I/O
Operation time monitor	OK						
Contact operation counter	OK						
Unit conduction time monitor	OK						
Total ON time monitor	OK						
Unit comments	OK						
Connected device comments	OK						
Network power supply voltage monitor	OK						
I/O power supply monitor	OK						
Communications error log	OK						
Input filter	OK	---	OK	---	OK	---	OK
Power-ON inrush current protection	OK	---	OK	---	OK	---	OK
Sensor power supply short-circuit detection	OK	---	---		OK	---	OK
External load disconnection detection	OK	---	---		OK	---	OK
External load short-circuit detection	---	OK	---		---	OK (See Note.)	OK (See Note.)
Disconnected sensor detection	---	OK	---		---	OK	OK
Removable terminal block	OK						
Communications speed auto-detect	OK						
No need to wire Unit power supply	OK						
No need to wire input device power supply	---						
Expansion via Expansion I/O Units	---						
Scaling	---						
User compensation	---						
Last maintenance date	OK						
Cumulative counter	---						
Moving average processing	---						
Number of A/D conversion points (conversion cycle) setting	---						
Peak/bottom hold	---						
Top/valley hold	---						
Percentage change calculation	---						
Comparator	---						
Selectable output value after error	---						

Notice: The contact operation counter function and the total ON time monitor function cannot be used simultaneously for the same contact.
Note: The DRT2-OD32SLH-1/MD32SLH-1 of unit version 2.0 or higher support External load short-circuit detection function.

OK: Function supported, ---: Function not supported.

Function	Environment-resistive Slaves					Analog Slaves			
						Analog I/O Terminals			Temperature Input Terminals
	Advanced Model		Standard Model			DRT2-AD04	DRT2-AD04H	DRT2-DA02	
	Input	Output	Input	Output	I/O	Input		Output	Input
Operation time monitor	---		--- ✻		OK	---			---
Contact operation counter	OK					---			---
Unit conduction time monitor	OK					OK			OK
Total ON time monitor	OK					---			---
Unit comments	OK					OK			OK
Connected device comments	OK					OK			OK
Network power supply voltage monitor	OK					OK			OK
I/O power supply monitor	---	OK	OK			---			---
Communications error log	---	OK	OK			OK			OK
Input filter	OK	---	OK	---	OK	---			---
Power-ON inrush current protection	OK	---	OK	---	OK	---			---
Sensor power supply short-circuit detection	OK	---	---			---			---
External load disconnection detection	OK	---	---			---			---
External load short-circuit detection	---	OK	---			---			---
Disconnected sensor detection	---					---			---
Removable terminal block	---					OK			OK
Communications speed auto-detect	OK					OK			OK
No need to wire Unit power supply	OK					OK			OK
No need to wire input device power supply	OK	---	---			---			---
Expansion via Expansion I/O Units	---					---			---
Scaling	---					OK			OK
User compensation	---					OK			OK
Last maintenance date	OK					OK			OK
Cumulative counter	---					OK			OK
Moving average processing	---					OK	OK	---	OK
Number of A/D conversion points (conversion cycle) setting	---					OK	---	---	---
Peak/bottom hold	---					OK	OK	---	OK
Top/valley hold	---					OK	OK	---	OK
Percentage change calculation	---					OK	OK	---	OK
Comparator	---					OK	OK	---	OK
Selectable output value after error	---					---	---	OK	---
Top/valley count	---					---			OK
Operating time in preset temperature	---					---			OK
Temperature difference detection between input channels	---					---			OK

✻ The operation time monitor can be used with the DRT2-□D04CL(-1).

Notice: The contact operation counter function and the total ON time monitor function cannot be used simultaneously for the same contact.

Smart Slave Functions

● Network Power Voltage Monitor

The present, bottom, and peak values of the Network power voltage can be recorded in the Slave. Also, the monitor voltage can be set using the CX-Integrator to maintain the monitor voltage in the slave (default setting: 14 V), and a Status Area in the Unit will turn ON if the voltage falls below the monitor voltage.

● Unit Conduction Time Monitor

The total ON time of the Slave's internal circuit power can be calculated and recorded. (The CX-Integrator or explicit messages can be used to read the information.)
Also, the monitor value can be maintained in the Slave, and a Status Area will turn ON in the Unit when the total time reaches the set value.

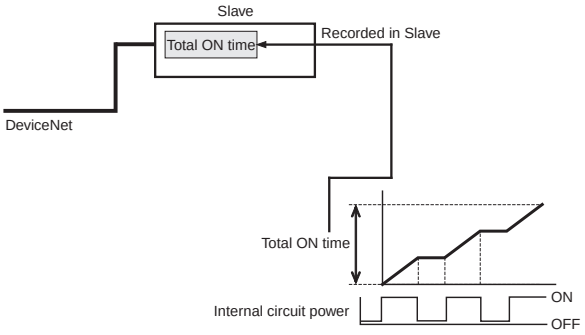

● Unit Comment Function

The user can assign and record a name or comment for every Unit (up to 32 characters).

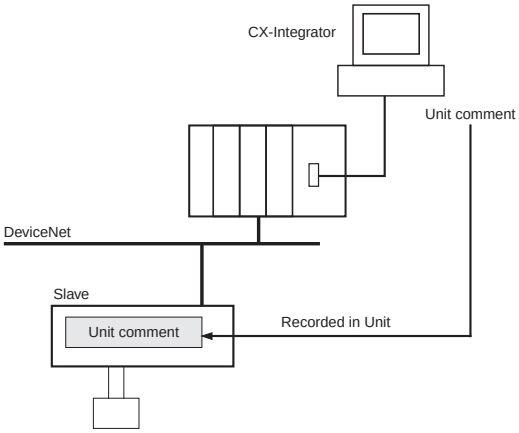

● Connected Device Comment Function

The user can assign a name for each of the Unit's I/O contacts (up to 32 characters) and record it in the Unit. The connected device can be checked for each I/O contact, allowing faulty devices to be identified during remote maintenance.

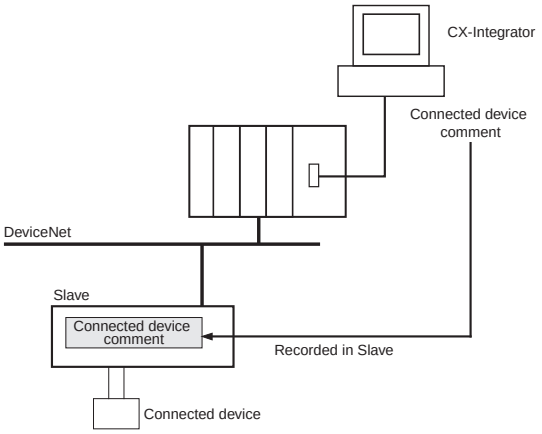

● Communication Error History Monitor

The error status information (communications error code and communications power voltage when the error occurred) for the last four communications errors that occurred can be recorded in the Slave.

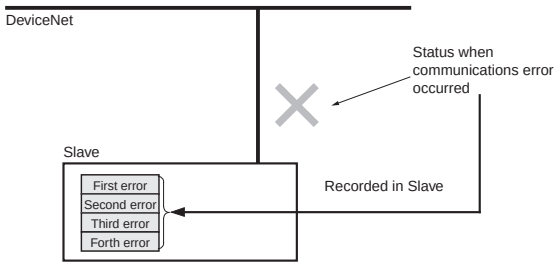

● Last Maintenance Date

This function enables writing to the Unit the date on which maintenance was last performed. This means that the timing for future maintenance can be judged more easily.

● Contact Operation Count Monitor Function

The Contact Operation Counter is used to count the number of times each input or output contact changes from OFF to ON (maximum sampling cycle: 50 Hz) and record the total value calculated in the slave. (The CX-Integrator or explicit messages can be used to read the information.)
The monitor value can be set in the slave, and when the set number of operations is reached, a bit in the Status Area in the Unit will be turned ON. (The CX-Integrator or explicit messages can be used to read the details of the notification.)

- Counted operations: 0 to 4,294,967,295 operations
  (Stored data: 0000 0000 to FFFF FFFF hex)
- Counting unit: One operation

Note 1: The Contact Operation Counter and Total ON Time Monitor cannot be used at the same time for the same contact. Select the function to be used under the Detection Mode heading.
Note 2: The Contact Operation Counter will operate only when the I/O power is ON.

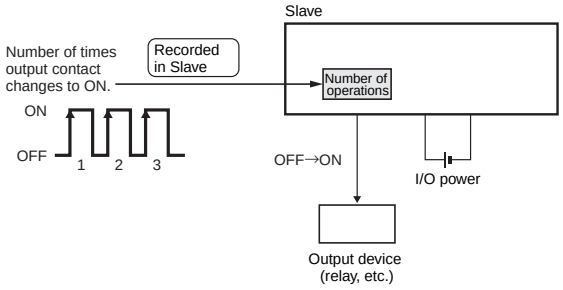

● Total ON Time Monitor Function

The total ON time for each I/O contact can be calculated (unit: s) and recorded in the Slave. (The CX-Integrator or explicit messages can be used to read the information.)
The monitor value can be set in the Slave, and when the set total time is reached, a bit in the Status Area in the Unit will be turned ON. (The CX-Integrator or explicit messages can be used to read the details of the notification.)

- Counted time: 0 to 4,294,967,295 seconds
  (stored data: 0000 0000 to FFFF FFFF hex)
- Counting unit: One second

Note 1: The Contact Operation Counter and Total ON Time Monitor cannot be used at the same time for the same contact. Select the function to be used under the Detection Mode heading.
2: The Total ON Time Monitor operates only when the I/O power is ON.
3: The Total ON Time Monitor checks approximately every second whether the connected devices are ON.
If the total ON time is calculated for ON times of less than a second, the measurement may not be accurate.

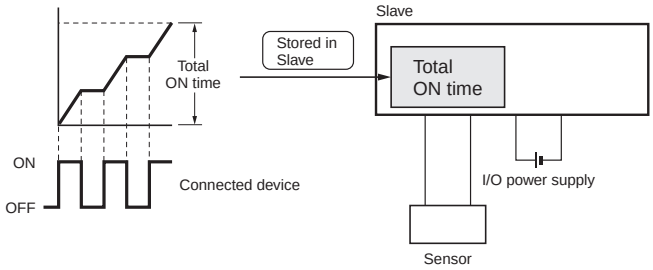

● Input Filter Function

This function can read the input value several times within a preset period and reduce the influence of incorrect signals due to switch chattering or data corrupted by noise. The input filter function can also be used for ON delay operation and OFF delay operation.

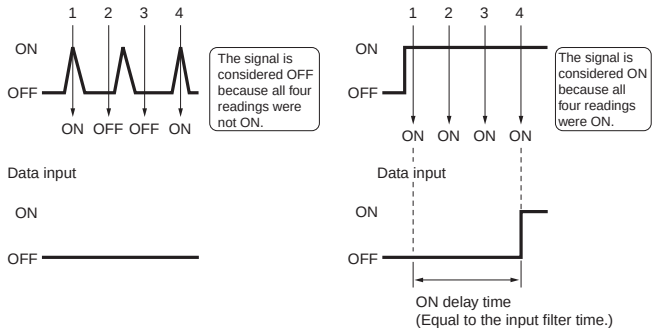

● Function to Prevent Incorrect Inputs Caused by Inrush Current when Power Is Turned ON (input only)

The I/O power supply can be monitored to stop any input when the I/O power is OFF and for 100 ms after it is turned ON. This function reduces incorrect inputs caused by inrush current for 100ms after the I/O power is turned ON.

● I/O Power Status Monitor Function

This function is used to detect whether the I/O power is ON.
When the I/O power supply is turned OFF, a bit in the Status Area in the Unit is turned ON. (The CX-Integrator or explicit messages can be used to read the content of the notification.)

Note: The value for detecting a low voltage for the I/O power cannot be set.

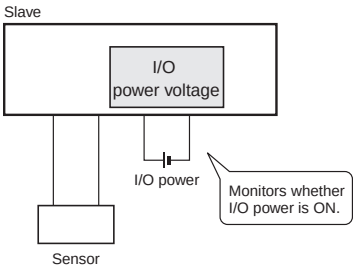

● Sensor Power Short-circuit Detection Function (input only)

The sensor power supply current can be monitored, and when the current reaches or exceeds 100 mA per input contact, a sensor power short-circuit is detected.
Check whether a sensor power short-circuit has been detected using the indicators on the slave. When a sensor power short-circuit is detected, a bit in the Status Area in the Unit will turn ON. (The CX-Integrator or explicit messages can be used to read the details of the notification.) The sensor will automatically recover when the cause of the short-circuit is removed, and the power output to the connector where the short-circuit was detected will turn ON.

Note: Use a Power Supply Unit with a rated power supply of 50 W or higher for the communications power supply. A short-circuit is detected when the Unit's sensor power output current reaches or exceeds 100 mA per input connector. When a short-circuit occurs, the communications power supply may be temporarily interrupted. After a short-circuit has been detected, the power will be automatically restored, but during the power interruption use an external circuit in the configuration to make sure the system is operating safely.
Use the following equations to calculate the sensor's current consumption.

- Total network current = Total Unit current consumption + Total sensor current consumption
- Communications power supply capacity ≥ (Total network current + Short-circuit detection current) x (=100 mA) x (DeviceNet network voltage)

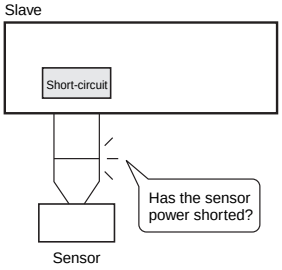

● External Load Short-circuit Detection Function (output only)

The load current of the Output Unit can be monitored, and an external load short-circuit can be detected when the current exceeds a set value per contact (or per common). When an external load short-circuit is detected, the output is turned OFF to prevent damage to the Unit's output circuit. The LED indicators on the Slave Unit can be used to check which contact has been detected as having an external load short-circuit. When an external load short-circuit is detected, a bit in the Status Area in the Unit will turn ON. (The CX-Integrator or explicit messages can be used to read the details of the notification.)
Manual recovery is the only way to remove the cause of the short-circuit.

Note: The OMRON S8□□ Power Supply Unit is recommended for the I/O power supply.
If a Power Supply Unit with a dropping overcurrent protection characteristic is used, the load short-circuit may not be detected. Always use a Power Supply Unit with a rating of 100 W or higher if it uses a dropping overcurrent protection characteristic.

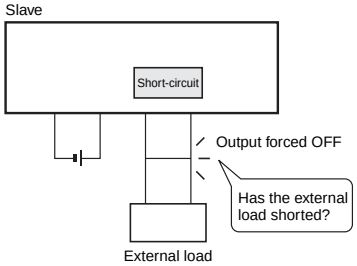

Transistor Remote I/O Terminals

DRT2-□D08(-1)/□D16(-1)

Allows I/O Expansion with Transistor Terminals

- Wide variety of data, such as maintenance system data, can be collected without affecting the productivity of the control system.
- Valuable information can be collected and managed through the network, including information on the communications power supply voltage levels, Unit wear and tear, and equipment operating information.
- Expansion via Expansion I/O Units
- With no communications baud rate settings required and detachable terminal blocks, maintenance is easier.

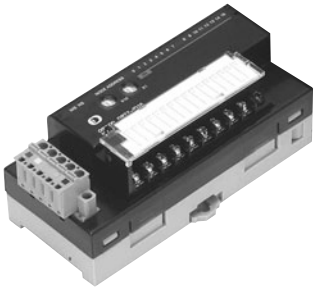

Smart Slave Functions

- Operation time monitor (input and output only) *1
- Contact operation counter
- Unit conduction time monitor
- Total ON time monitor
- Unit comments
- Connected device comments
- Network power supply voltage monitor
- I/O power supply monitor function
- Communications error log monitor
- Input filter (input or I/O only)
- Power-ON inrush current protection (input or I/O only)
- Removable terminal block
- Communications speed auto-detection
- No need to wire Unit power supply
- Expansion via Expansion I/O Units *2
- Last maintenance date

*1. The operation time monitor cannot be used with the DRT2-□D08(-1).
*2. Expansion Units cannot be added with the DRT2-□D08(-1)or DRT2-MD16(-1).

Ordering Information

Specifications			I/O connections	Rated internal circuit power supply voltage	Rated I/O power supply voltage	Model
Inputs	NPN (+ common)	16 points	M3 Screw terminals	Supplied from the communications connector	24 VDC	**DRT2-ID16**
	PNP (- common)					**DRT2-ID16-1**
Outputs	NPN (- common)					**DRT2-OD16**
	PNP (+ common)					**DRT2-OD16-1**
I/O	NPN (input: + common, output: - common)	Input: 8 points/ Output: 8 points				**DRT2-MD16**
	PNP (input: - common, output: + common)					**DRT2-MD16-1**
Inputs	NPN (+ common)	8 points				**DRT2-ID08**
	PNP (- common)					**DRT2-ID08-1**
Outputs	NPN (- common)	8 points				**DRT2-OD08**
	PNP (+ common)					**DRT2-OD08-1**

Expansion Units

One Expansion Unit can be added to each DRT2-ID16(-1)/-OD16(-1) or DRT2-ROS16 I/O Slave.
The following Expansion Units are available to enable flexible expansion with combinations for the required number of points.

Model	Number of I/O points
XWT-ID08	8-point inputs (NPN)
XWT-ID08-1	8-point inputs (PNP)
XWT-OD08	8-point outputs (NPN)
XWT-OD08-1	8-point outputs (PNP)
XWT-ID16	16-point inputs (NPN)
XWT-ID16-1	16-point inputs (PNP)
XWT-OD16	16-point outputs (NPN)
XWT-OD16-1	16-point outputs (PNP)

General Specifications

Communications power supply voltage	11 to 25 VDC
Unit power supply voltage	Not required (Supplied from the communications connector.)
I/O power supply voltage	20.4 to 26.4 VDC (24 VDC -15%/+10%)
Communications power supply current consumption	DRT2-ID08(-1) : 40 mA max. (24 VDC), 70 mA max. (11 VDC) DRT2-OD08 : 40 mA max. (24 VDC), 60 mA max. (11 VDC) DRT2-OD08-1 : 35 mA max. (24 VDC), 55 mA max. (11 VDC) DRT2-ID16(-1) : 40 mA max. (24 VDC), 65 mA max. (11 VDC) DRT2-OD16(-1) : 35 mA max. (24 VDC), 60 mA max. (11 VDC) DRT2-MD16(-1) : 40 mA max. (24 VDC), 65 mA max. (11 VDC)
Dielectric strength	500 VAC (between isolated circuits)
Noise immunity	Conforms to IEC61000-4-4, 2 kV (power line)
Vibration resistance	10 to 60 Hz, 0.7-mm double amplitude, 60 to 150 Hz, 50 m/s^2 for 80 min each in the X, Y, and Z directions
Shock resistance	150m/s^2, 6 directions, 3 times each
Mounting method	DIN 35 mm-track mounting
Screw tightening torque	M3 (power, I/O terminal): 0.5 N•m
Ambient operating temperature	–10°C to 55°C
Ambient operating humidity	25 to 85% (with no condensation)
Ambient storage temperature	-25°C to 65°C
Weight	DRT2-ID08(-1)/OD08(-1) : 135 g max. DRT2-MD16(-1) : 145 g max. DRT2-ID16(-1)/OD16(-1) : 140 g max.

Input Specifications

● 8-point Inputs Terminals with Transistors

Item / Model	DRT2-ID08	DRT2-ID08-1
Internal I/O common	NPN	PNP
Number of I/O points	8 inputs	
ON voltage	15 VDC min. (between each input terminal and V)	15 VDC min. (between each input terminal and G)
OFF voltage	5 VDC max. (between each input terminal and V)	5 VDC min. (between each input terminal and G)
OFF current	1.0 mA max.	
Input current	6.0 mA max. per point at 24 VDC 3.0 mA max. per point at 17 VDC	
ON delay time	1.5 ms max.	
OFF delay time	1.5 ms max.	
Number of points per common	8 per common	

● 16-point Inputs Terminals with Transistors

Item / Model	DRT2-ID16	DRT2-ID16-1
Internal I/O common	NPN	PNP
Number of I/O points	16 inputs	
ON voltage	15 VDC min. (between each input terminal and V)	15 VDC min. (between each input terminal and G)
OFF voltage	5 VDC max. (between each input terminal and V)	5 VDC min. (between each input terminal and G)
OFF current	1.0 mA max.	
Input current	6.0 mA max. per point at 24 VDC 3.0 mA max. per point at 17 VDC	
ON delay time	1.5 ms max.	
OFF delay time	1.5 ms max.	
Number of points per common	16 per common	

● 8-point Inputs/8-point Outputs Terminals with Transistors

Item / Model	DRT2-MD16	DRT2-MD16-1
Internal I/O common	NPN	PNP
Number of I/O points	8 inputs	
ON voltage	15 VDC min. (between each input terminal and V)	15 VDC min. (between each input terminal and G)
OFF voltage	5 VDC max. (between each input terminal and V)	5 VDC min. (between each input terminal and G)
OFF current	1.0 mA max.	
Input current	6.0 mA max. per point at 24 VDC 3.0 mA max. per point at 17 VDC	
ON delay time	1.5 ms max.	
OFF delay time	1.5 ms max.	
Number of points per common	8 per common	

Output Specifications

● 8-point Outputs Terminals with Transistors

Item / Model	DRT2-OD08	DRT2-OD08-1
Internal I/O common	NPN	PNP
Number of I/O points	8 outputs	
Rated output current	0.5 A per point, 4 A per common	
Residual voltage	1.2 V max. (0.5 A DC between each output terminal and G)	1.2 V max. (0.5 A DC between each output terminal and V)
Leakage current	0.1 ms max.	
ON delay time	0.5 ms max.	
OFF delay time	1.5 ms max.	
Number of points per common	8 per common	

● 16-point Outputs Terminals with Transistors

Item / Model	DRT2-OD16	DRT2-OD16-1
Internal I/O common	NPN	PNP
Number of I/O points	16 outputs	
Rated output current	0.5 A per point, 4 A per common	
Residual voltage	1.2 V max. (0.5 A DC between each output terminal and G)	1.2 V max. (0.5 A DC between each output terminal and V)
Leakage current	0.1 ms max.	
ON delay time	0.5 ms max.	
OFF delay time	1.5 ms max.	
Number of points per common	16 per common	

● 8-point Inputs/8-point Outputs Terminals with Transistors

Item / Model	DRT2-MD16	DRT2-MD16-1
Internal I/O common	NPN	PNP
Number of I/O points	8 outputs	
Rated output current	0.5 A per point, 4 A per common	
Residual voltage	1.2 V max. (0.5 A DC between each output terminal and G)	1.2 V max. (0.5 A DC between each output terminal and V)
Leakage current	0.1 ms max.	
ON delay time	0.5 ms max.	
OFF delay time	1.5 ms max.	
Number of points per common	8 per common	

Dimensions

(Unit: mm)

DRT2-ID16(-1)
DRT2-OD16(-1)
DRT2-ID08(-1)
DRT2-OD08(-1)
DRT2-MD16(-1)

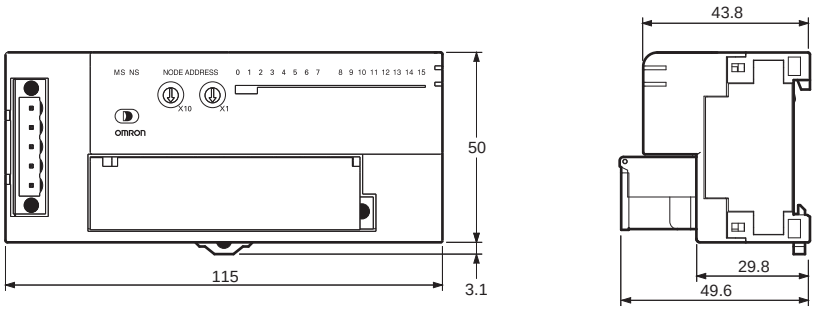

Wiring Diagrams

DRT2-ID08 (NPN)

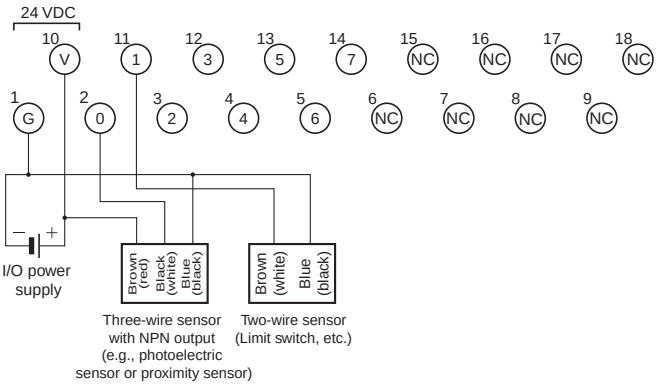

DRT2-ID08-1 (PNP)

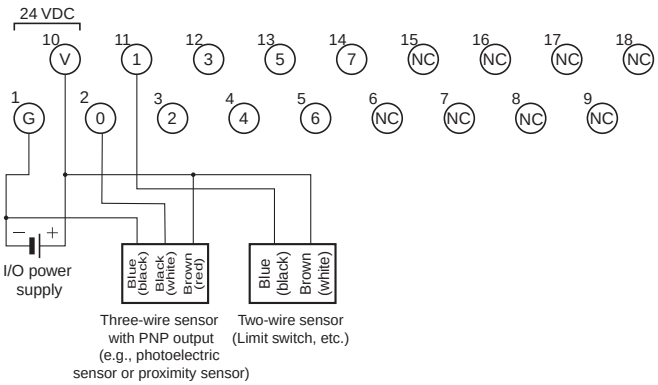

DRT2-OD08 (NPN)

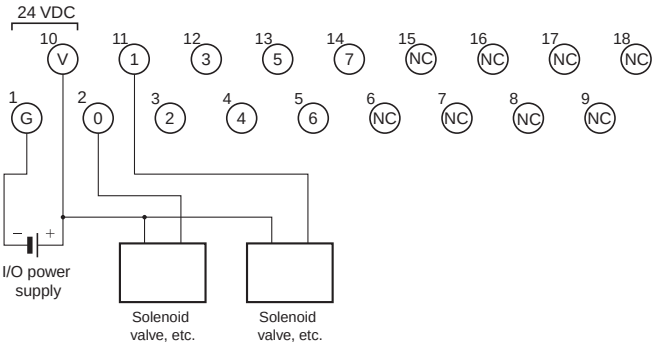

DRT2-OD08-1 (PNP)

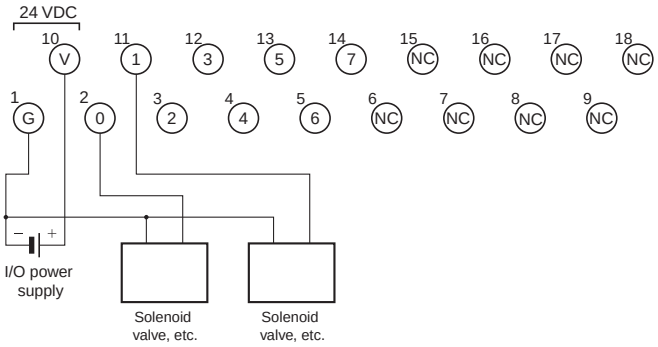

DRT2-ID16 (NPN)

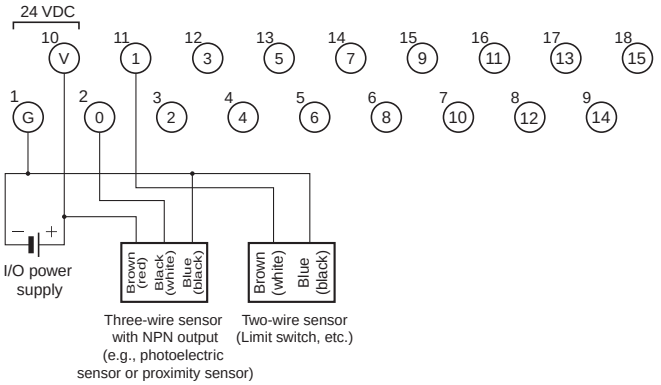

DRT2-ID16-1 (PNP)

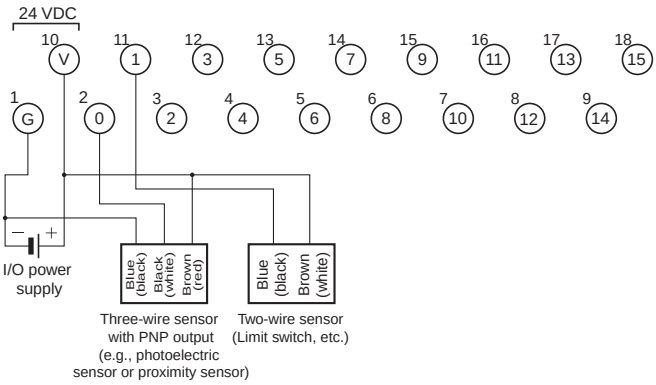

DRT2-OD16 (NPN)

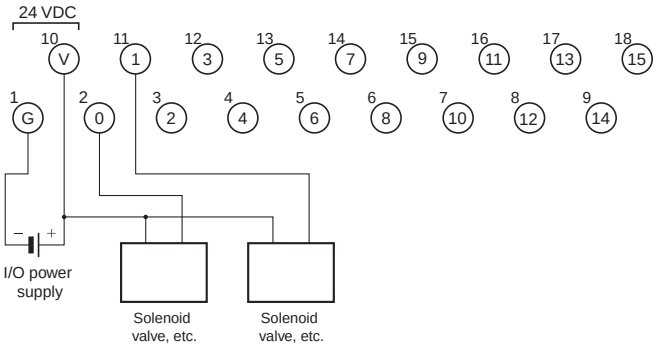

DRT2-OD16-1 (PNP)

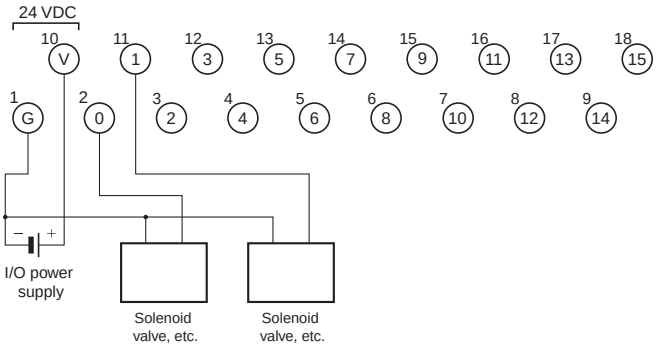

DRT2-MD16 (NPN)

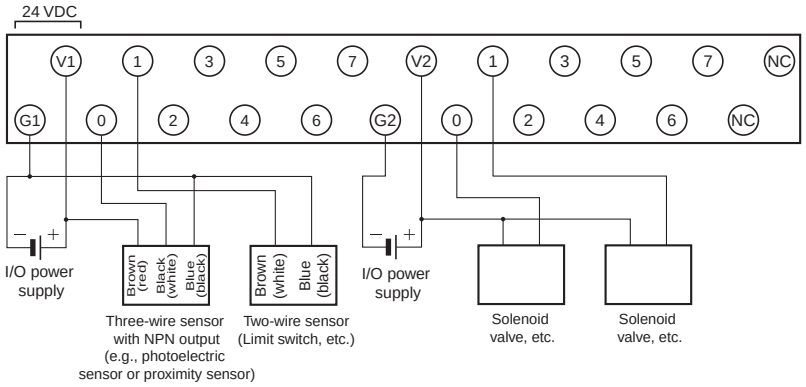

DRT2-MD16-1 (PNP)

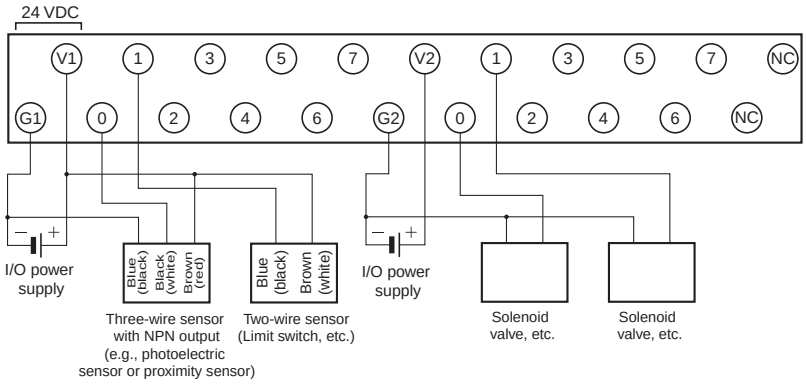

Expansion Units

XWT-ID08(-1)/OD08(-1)/ID16(-1)/OD16(-1)

Expansion I/O Units make expansion easy!

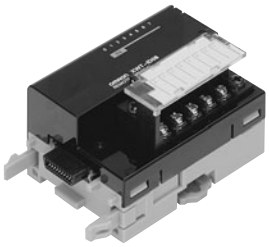

One Expansion Unit can be added to each Digital I/O Slave Unit. This makes a variety of I/O combinations possible, such as 16 inputs + 8 outputs, extending the range of possible system configurations.

- Flexible expansion with many different combinations.
- Detachable I/O terminal block enables faster startup time and improved maintainability.
- Collect various preventive maintenance data required to improve productivity, as information on equipment deterioration due to aging and equipment operating time data.

Ordering Information

Name	Specifications				Model
Expansion Units	Inputs	8 points	NPN	One Expansion Unit can be mounted per DRT2-ID16(-1)/-OD16(-1) or DRT2-ROS16 Remote I/O Terminal.	**XWT-ID08**
			PNP		**XWT-ID08-1**
	Outputs		NPN		**XWT-OD08**
			PNP		**XWT-OD08-1**
	Inputs	16 points	NPN		**XWT-ID16**
			PNP		**XWT-ID16-1**
	Outputs		NPN		**XWT-OD16**
			PNP		**XWT-OD16-1**

General Specifications

I/O power supply voltage	20.4 to 26.4 VDC (24 VDC -15%/+10%)
Noise immunity	Conforms to IEC 61000-4-4 2 kV (power line).
Vibration resistance	10 to 60 Hz with double-amplitude of 0.7 mm, 60 to 150 Hz and 50 m/s² in X, Y, and Z directions for 80 min each
Shock resistance	150 m/s² (3 times each in 6 directions on 3 axes)
Dielectric strength	500 VAC (between isolated circuits)
Insulation resistance	20 MΩ min. (between isolated circuits)
Ambient operating temperature	-10°C to 55°C
Ambient operating humidity	25% to 85% (with no condensation)
Ambient operating atmosphere	No corrosive gases
Storage temperature	-25°C to 65°C
Storage humidity	25% to 85% (with no condensation)
Tightening torque for the terminal block screws	M3 terminal screws: 0.5 N•m M3 mounting screws: 0.5 N•m
Mounting method	Mounted on 35-mm DIN Track

Input Specifications

Item / Model	XWT-ID08	XWT-ID08-1	XWT-ID16	XWT-ID16-1
Internal I/O common	NPN	PNP	NPN	PNP
I/O points	8 inputs		16 inputs	
ON voltage	15 VDC min. (between each input terminal and the V terminal)	15 VDC min. (between each input terminal and the G terminal)	15 VDC min. (between each input terminal and the V terminal)	15 VDC min. (between each input terminal and the G terminal)
OFF voltage	5 VDC max. (between each input terminal and the V terminal)	5 VDC max. (between each input terminal and the G terminal)	5 VDC max. (between each input terminal and the V terminal)	5 VDC max. (between each input terminal and the G terminal)
OFF current	1.0 mA max.			
Input current	At 24 VDC: 6.0 mA max./input At 17 VDC: 3.0 mA max./input			
ON delay time	1.5 ms max.			
OFF delay time	1.5 ms max.			
Number of circuits per common	8 per common		16 per common	
Communications power supply current consumption	5 mA max. (24 VDC), 5 mA max. (11 VDC)		10 mA max. (24 VDC), 15 mA max. (11 VDC)	
Weight	80 g max.		120 g max.	

Output Specifications

Item / Model	XWT-OD08	XWT-OD08-1	XWT-OD16	XWT-OD16-1
Internal I/O common	NPN	PNP	NPN	PNP
I/O points	8 outputs		16 outputs	
Rated output current	0.5 A/output, 2.0 A/common		0.5 A/output, 4.0 A/common	
Residual voltage	1.2 V max. (0.5 A DC, between each output terminal and the G terminal)	1.2 V max. (0.5 A DC, between each output terminal and the V terminal)	1.2 V max. (0.5 A DC, between each output terminal and the G terminal)	1.2 V max. (0.5 A DC, between each output terminal and the V terminal)
Leakage current	0.1 mA max.			
ON delay time	0.5 ms max.			
OFF delay time	1.5 ms max.			
Number of circuits per common	8 per common		16 per common	
Communications power supply current consumption	5 mA max. (24 VDC), 5 mA max. (11 VDC)		10 mA max. (24 VDC), 15 mA max. (11 VDC)	
Weight	80 g max.		120 g max.	

Nomenclature and Functions

XWT-ID08/XWT-ID08-1

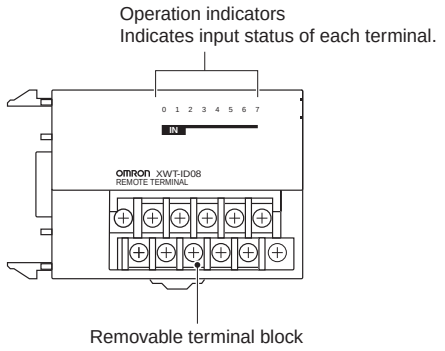

XWT-OD08/XWT-OD08-1

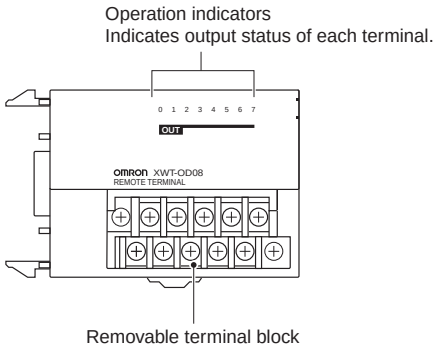

XWT-ID16/XWT-ID16-1

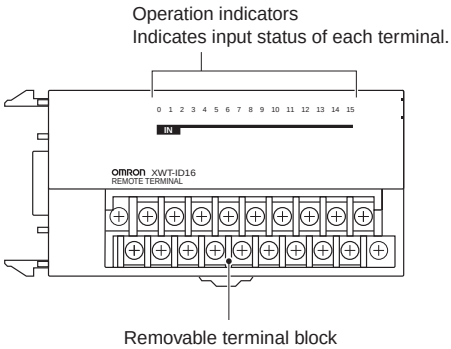

XWT-OD16/XWT-OD16-1

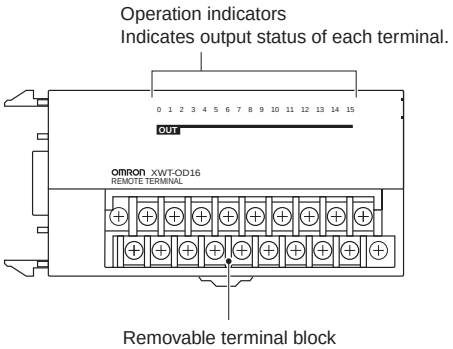

Wiring Diagrams

XWT-ID08 (NPN)

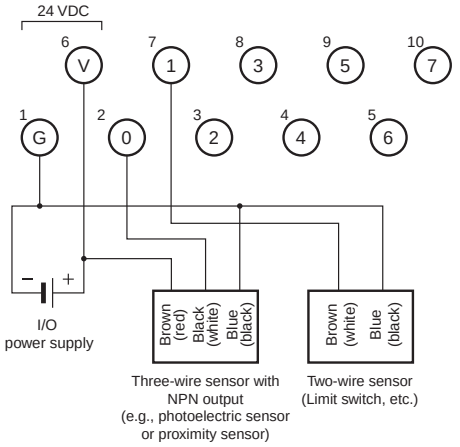

XWT-ID08-1 (PNP)

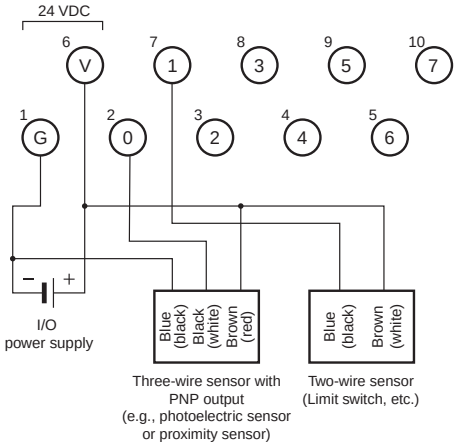

XWT-OD08 (NPN)

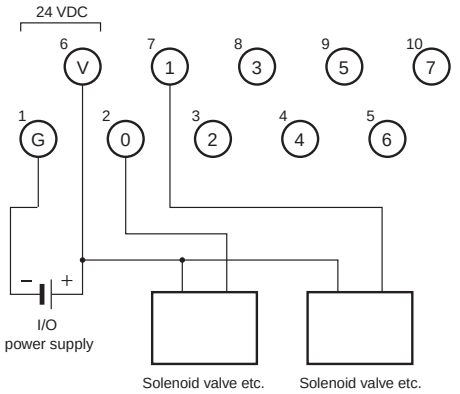

XWT-OD08-1 (PNP)

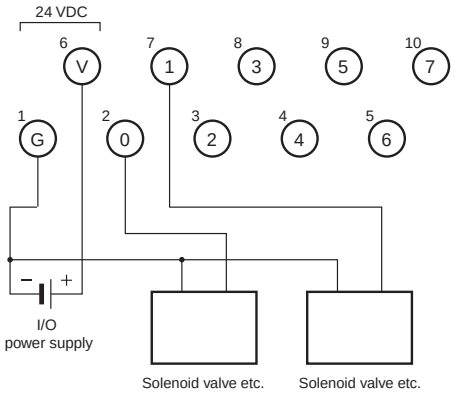

XWT-ID16 (NPN)

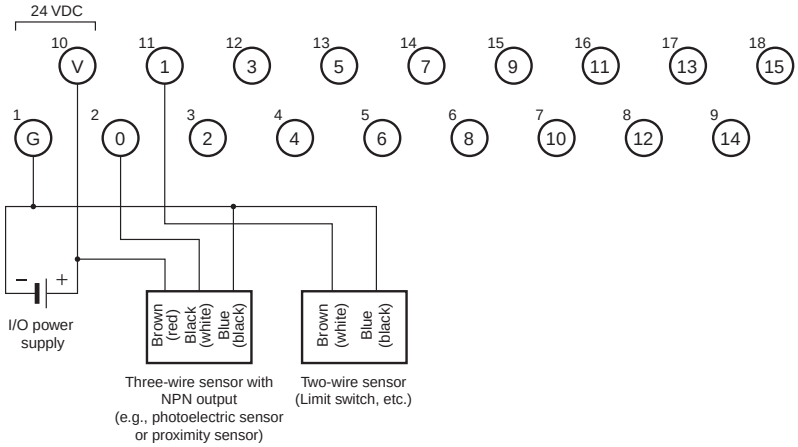

XWT-ID16-1 (PNP)

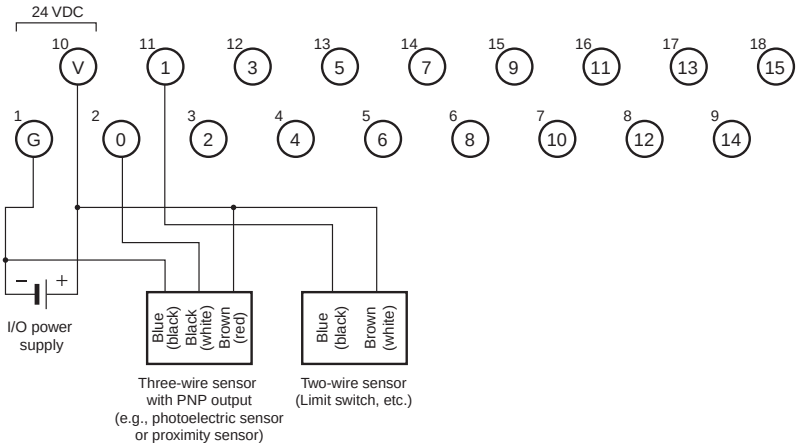

XWT-OD16 (NPN)

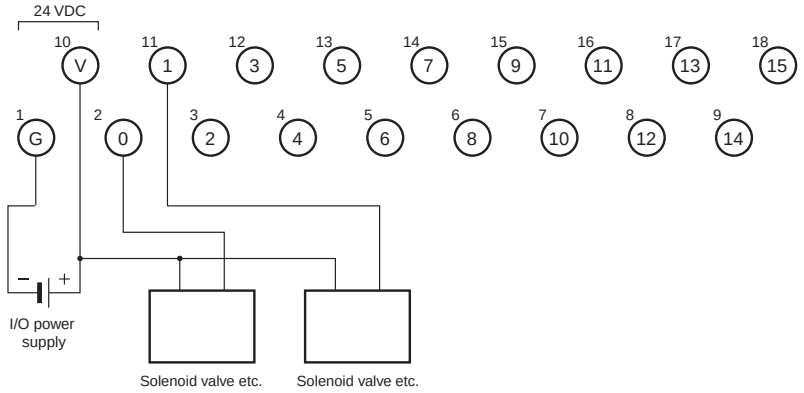

XWT-OD16-1 (PNP)

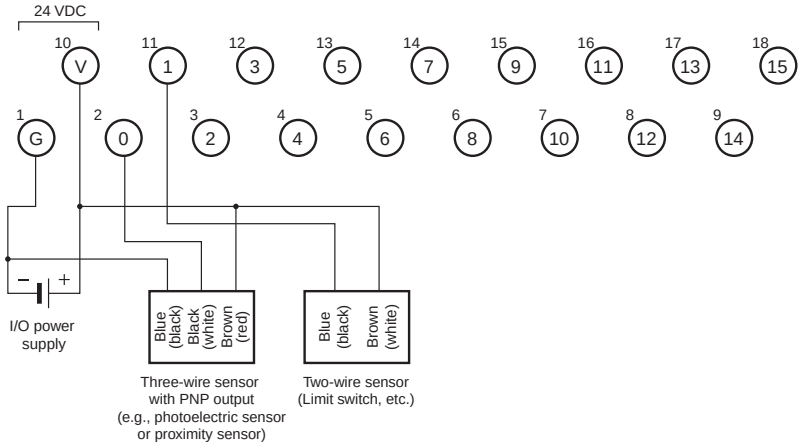

Dimensions

(Unit: mm)

● 8-point Model
XWT-ID08
XWT-ID08-1
XWT-OD08
XWT-OD08-1

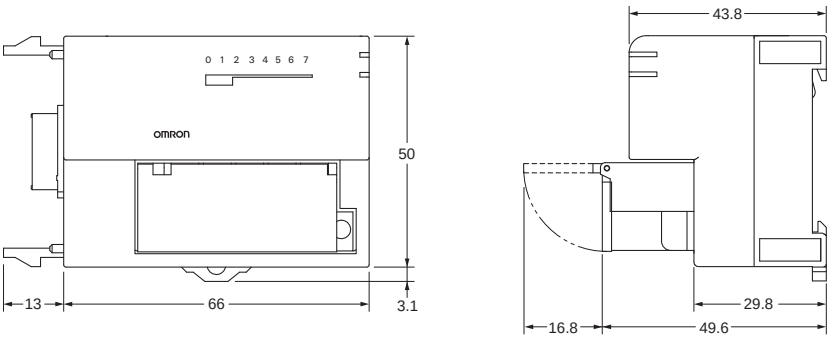

● 16-point Model
XWT-ID16
XWT-ID16-1
XWT-OD16
XWT-OD16-1

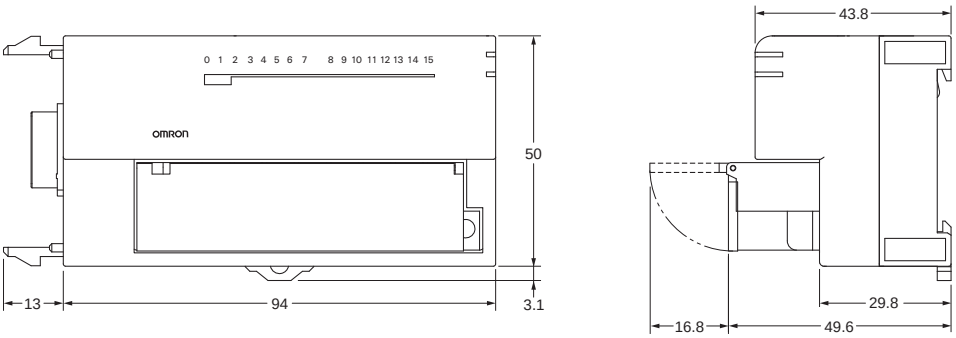

Remote I/O Terminal with Relay Outputs

DRT2-ROS16

A Smart Slave with Relay Outputs and One-step Relay Replacement for Remote Maintenance.

- Capable of handling large-capacity output devices (3 A max.)
- Easy relay replacement.

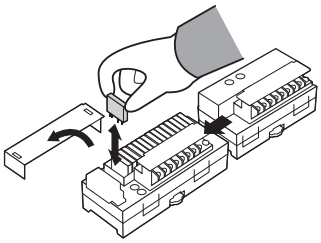

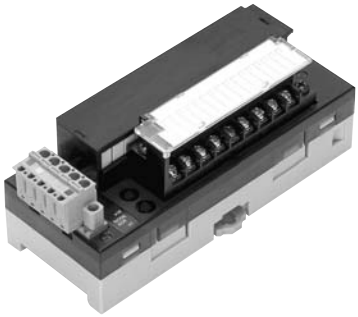

- I/O expansion possible to transistor I/O devices with terminal blocks (XWT Series).

Smart Slave Functions

Operation time monitor *	Contact operation counter	Unit conduction time monitor
Total ON time monitor	Unit comments	Connected device comments
Network power supply voltage monitor	Communications error log function	Removable terminal block
Communications speed auto-detection	No need to wire Unit power supply	Last maintenance date

✻ Applicable only when an Expansion Unit (XWT Series) is used.

Ordering Information

Specifications		I/O connections	Rated internal circuit power supply voltage	I/O power supply voltage	Model
Relay output	16 points	M3 terminal block	Supplied from the communications connector	Supplied from communications connector	**DRT2-ROS16**

General Specifications

Communications power supply voltage	11 to 25 VDC (Supplied from communications connector)
Communications power supply current consumption	215 mA max. (24 VDC), 395 mA max. (11 VDC)
Noise immunity	Conforms to IEC61000-4-4, 2 kV (power line)
Vibration resistance	10 to 55 Hz, 0.7-mm double amplitude, 80 min each in the X, Y, and Z directions
Shock resistance	100 m/s²
Dielectric strength	500 VAC (between isolated circuits)
Insulation resistance	20 MΩ min.
Ambient operating temperature	-10°C to 55°C
Ambient operating humidity	25% to 85% (with no condensation)
Ambient atmosphere	No corrosive gases
Ambient storage temperature	-25°C to 65°C
Mounting method	35-mm DIN rail mounting
Screw tightening torque	M2 (communications connector screws): 0.2 to 0.3 N·m M3 (screw terminals): 0.5 N·m M3 (mounting screws): 0.5 N·m
Weight	260 g max.

Output Specifications per Relay

Mounted relays	DRTA-NY5W-K ✻1
Rated load	Resistive load: 2 A at 250 VAC, 8 A per common 2 A at 30 VDC, 8 A per common
Rated current	3A ✻2
Max. contact voltage	250 VAC, 125 VDC
Max. contact current	3A
Max. switching capacity	750 VA AC, 90 VDC
Min. applicable load (reference value)	1 mA at 5 VDC

✻1. Order replacement relays using the following model number.

Model
DRTA-NY5W-K

The maximum number of ON contacts per common is four, and 3 A (10 A per common) will flow at an ambient temperature of 45°C max.

Expansion Units

One Expansion Unit can be added to each DRT2-ID16(-1)/-OD16(-1) or DRT2-ROS16 I/O Slave.
The following Expansion Units are available to enable flexible expansion with combinations for the required number of points.

Model	Number of I/O points
XWT-ID08	8-point inputs (NPN)
XWT-ID08-1	8-point inputs (PNP)
XWT-OD08	8-point outputs (NPN)
XWT-OD08-1	8-point outputs (PNP)
XWT-ID16	16-point inputs (NPN)
XWT-ID16-1	16-point inputs (PNP)
XWT-OD16	16-point outputs (NPN)
XWT-OD16-1	16-point outputs (PNP)

Dimensions

(Unit: mm)

DRT2-ROS16

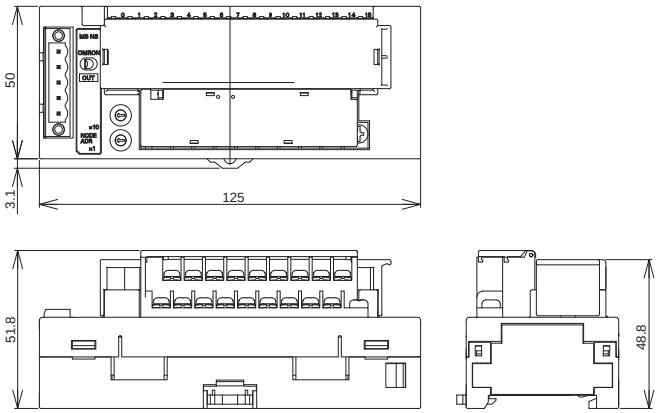

Wiring Diagrams

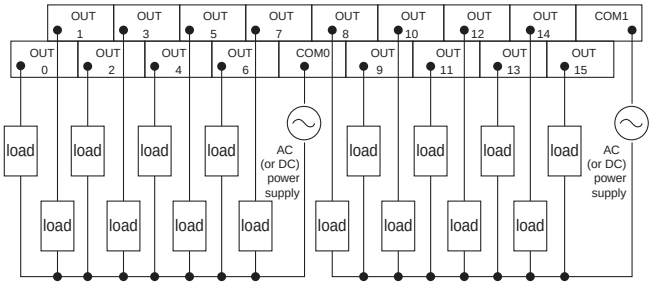

Transistor Remote I/O Terminals with 3-tier Terminal Blocks

DRT2-□D16TA(-1)

A Smart Slave with a 3-tier Terminal Block That Means Wiring Locations Are Easy to Understand with No Sharing of Terminals.

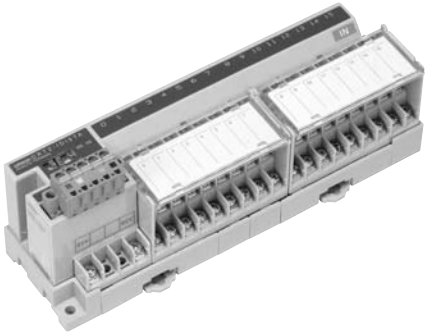

- Easy wiring with no sharing of terminals. Easy-to-understand wiring locations.
- No relay terminal block terminals required.
- Detachable cassette-type circuit sections.

Smart Slave Functions

- Operation time monitor
- Contact operation counter
- Unit conduction time monitor
- Total ON time monitor
- Unit comments
- Connected device comments
- Network power supply voltage monitor
- I/O power supply monitor function
- Communications error log function
- Input filter (input or I/O only)
- Power-ON inrush current protection (input or I/O only)
- Removable terminal block
- Communications speed auto-detection
- No need to wire Unit power supply
- Last maintenance date

Ordering Information

Specifications			I/O connections	Rated internal circuit power supply voltage	I/O power supply voltage	Model
Inputs	NPN (+ common)	16 points	M3 screw terminals	Supplied from Basic Unit.	24 VDC	**DRT2-ID16TA**
	PNP (- common)					**DRT2-ID16TA-1**
Outputs	NPN (- common)					**DRT2-OD16TA**
	PNP (+ common)					**DRT2-OD16TA-1**
I/O	NPN (input: + common, output: - common)	Input: 8 points/ Output: 8 points				**DRT2-MD16TA**
	PNP (input: - common, output: + common)					**DRT2-MD16TA-1**

General Specifications

Communications power supply voltage	11 to 25 VDC (Supplied from communications connector)
Communications power supply current consumption	45 mA max. (24 VDC), 80 mA max. (11 VDC)
Noise immunity	Conforms to IEC61000-4-4, 2 kV (power line)
Vibration resistance	10 to 60 Hz, 0.7-mm double amplitude, 60 to 150 Hz, 50 m/s² for 80 min each in the X, Y, and Z directions
Shock resistance	150 m/s² (3 times each in 6 directions on 3 axes)
Dielectric strength	500 VAC (between isolated circuits)
Insulation resistance	20 MΩ min. (between isolated circuits)
Ambient operating temperature	-10°C to 55°C
Ambient operating humidity	25% to 85% (with no condensation)
Ambient atmosphere	No corrosive gases
Ambient storage temperature	-25°C to 65°C
Mounting method	DIN 35 mm-track mounting, M4 screw mounting
Screw tightening torque	M2 (communications connector screws): 0.26 to 0.3 N·m M3 (screw terminals): 0.5 N·m M3 (screw terminals): 0.5 N·m M4 (unit mounting): 0.6 to 0.98 N·m
Weight	300 g max.

Input Specifications

● 16-point Inputs Terminals with Transistors

Item / Model	DRT2-ID16TA	DRT2-ID16TA-1
Internal I/O common	NPN	PNP
I/O points	16 inputs	
ON voltage	15 VDC min. (between input and V terminal)	15 VDC min. (between input and G terminal)
OFF voltage	5 VDC max. (between input and V terminal)	5 VDC max. (between input and G terminal)
OFF current	1.0 mA max.	
Input current	24 VDC: 6.0 mA max./point 17 VDC: 3.0 mA max./point	
ON delay time	1.5 ms max.	
OFF delay time	1.5 ms max.	
Number of circuits per common	8 per common	

● 8-point Inputs/8-point Outputs Terminals with Transistors

Item / Model	DRT2-MD16TA	DRT2-MD16TA-1
Internal I/O common	NPN	PNP
I/O points	8 inputs	
ON voltage	15 VDC min. (between input and V terminal)	15 VDC min. (between input and G terminal)
OFF voltage	5 VDC max. (between input and V terminal)	5 VDC max. (between input and G terminal)
OFF current	1.0 mA max.	
Input current	24 VDC: 6.0 mA max./point 17 VDC: 3.0 mA max./point	
ON delay time	1.5 ms max.	
OFF delay time	1.5 ms max.	
Number of circuits per common	8 per common	

Output Specifications

● 16-point Outputs Terminals with Transistors

Item / Model	DRT2-OD16TA	DRT2-OD16TA-1
Internal I/O common	NPN	PNP
I/O points	16 outputs	
Rated output current	0.5 A/point	
Residual voltage	1.2 VDC max. (0.5 A DC between output and G terminal)	1.2 VDC max. (0.5 A DC between output and V terminal)
Leakage current	0.1 mA max.	
ON delay time	0.5 ms max.	
OFF delay time	1.5 ms max.	
Number of circuits per common	8 per common	

● 8-point Inputs/8-point Outputs Terminals with Transistors

Item / Model	DRT2-MD16TA	DRT2-MD16TA-1
Internal I/O common	NPN	PNP
I/O points	8 outputs	
Rated output current	0.5 A/point	
Residual voltage	1.2 VDC max. (0.5 A DC between output and G terminal)	1.2 VDC max. (0.5 A DC between output and V terminal)
Leakage current	0.1 mA max.	
ON delay time	0.5 ms max.	
OFF delay time	1.5 ms max.	
Number of circuits per common	8 per common	

Dimensions

(Unit: mm)

DRT2-ID16TA(-1)
DRT2-OD16TA(-1)
DRT2-MD16TA(-1)

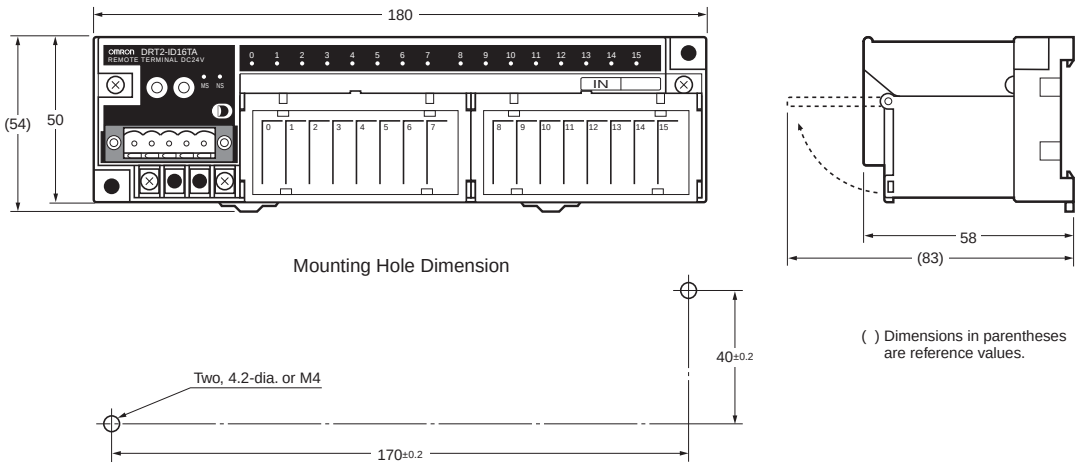

( ) Dimensions in parentheses are reference values.

Wiring Diagrams

DRT2-ID16TA (NPN)

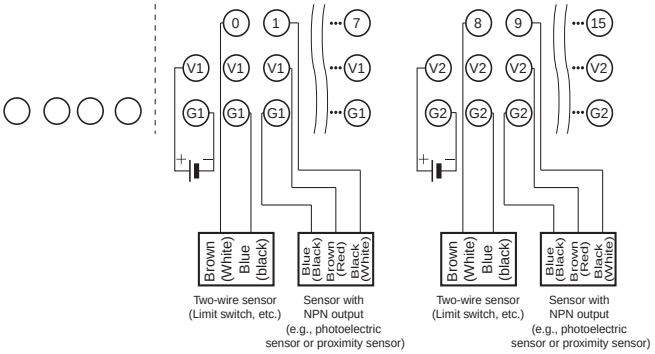

DRT2-ID16TA-1 (PNP)

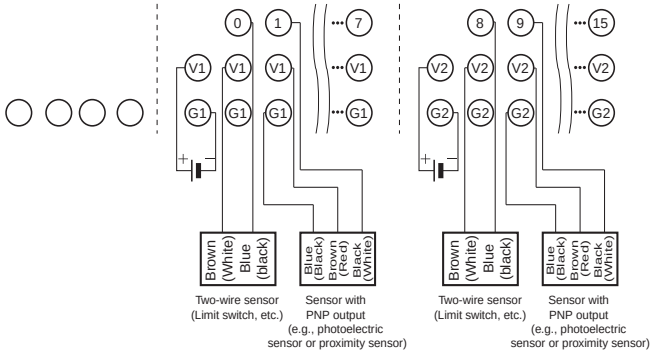

DRT2-OD16TA (NPN)

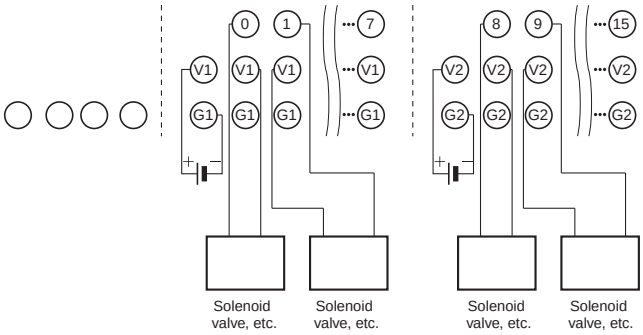

DRT2-OD16TA-1 (PNP)

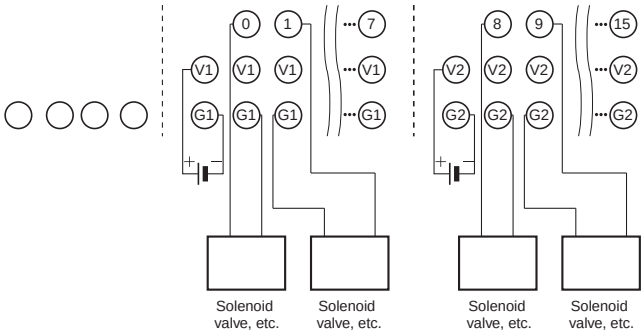

DRT2-MD16TA (NPN)

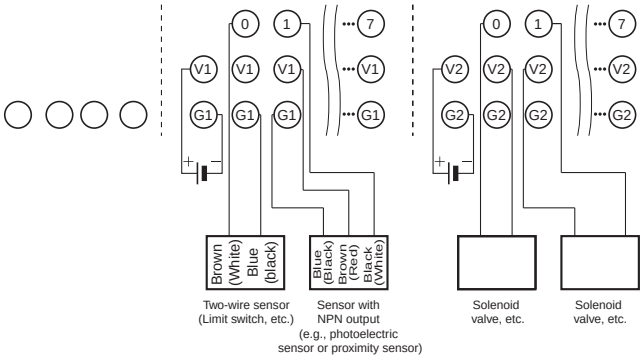

DRT2-MD16TA-1 (PNP)

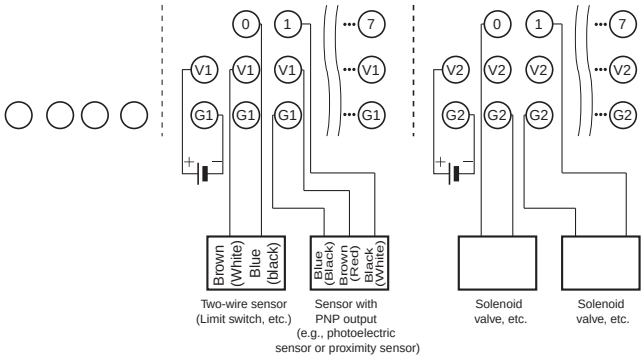

e-CON Connector Terminals

DRT2-□D16S(-1)

Includes Sensor Connector That Conforms to Industry Standards And Can Be Used to Connect Sensors with Pre-wired Cables without Using Special Tools.

- Equipped with the standard Smart Slave functions that provide powerful preventative maintenance and troubleshooting capabilities.
- Digital I/O Terminal compatible with industry-standard sensor connectors
- Connect sensors easily without special tools. Reduce time required for wiring.
- Load short-circuit detection.

Smart Slave Functions

- Operation time monitor (I/O only)
- Total ON time monitor
- Network power supply voltage monitor
- Power-ON inrush current protection
- Communications speed auto-detection
- Last maintenance date
- Contact operation counter
- Unit comments
- Communications error log function
- Sensor power supply short-circuit detection
- No need to wire Unit power supply
- Unit conduction time monitor
- Connected device comments
- Input filter
- External load short-circuit detection function
- No need to wire input device power supply

Ordering Information

Specifications			I/O connections	Rated internal circuit power supply voltage	Rated I/O power supply voltage	Model
Inputs	NPN (+ common)	16 inputs	Sensor connector	Supplied from the communications connector	Supplied from the communications connector	**DRT2-ID16S**
	PNP (- common)					**DRT2-ID16S-1**
I/O	NPN (input: + common, output: - common)	8 inputs/ 8 outputs			Supplied from external source for outputs	**DRT2-MD16S**
	PNP (input: - common, output: + common)					**DRT2-MD16S-1**

General Specifications

Item / Model	DRT2-ID16S(-1)	DRT2-MD16S(-1)
Communications power supply voltage	11 to 25 VDC	
Communications power supply current consumption	45 mA max. (24 VDC), 80 mA max. (11 VDC)	
Unit power supply voltage	Not required (Supplied from the communications connector.)	
I/O power supply voltage	20.4 to 26.4 VDC (24 VDC -15%/+10%)	
Current consumption	Communications power supply: 230 mA max.	Communications power supply: 135 mA max.
Dielectric strength	500 VAC between isolated circuits	
Noise immunity	Conforms to IEC61000-4-4, 2 kV (power line)	
Vibration resistance	10 to 60 Hz, 0.7-mm double amplitude, 60 to 150 Hz, 50 m/s² for 80 min each in the X, Y, and Z directions	
Shock resistance	150m/s², 6 directions, 3 times each	
Mounting method	DIN 35 mm-track mounting or M4 screw mounting	
Screw tightening torque	M2 (communications connector screws): 0.26 to 0.3 N•m M4 (unit mounting): 0.6 to 0.98 N•m	
Ambient operating temperature	-10°C to 55°C	

Item / Model	DRT2-ID16S(-1)	DRT2-MD16S(-1)
Ambient operating humidity	25 to 85% (with no condensation)	
Ambient storage temperature	-25°C to 65°C	
Weight	90 g max.	95 g max.

Output Specifications

● Terminals with 8 Inputs and 8 Outputs

Item / Model	DRT2-MD16S	DRT2-MD16S-1
Internal I/O common	NPN	PNP
I/O points	8 outputs	
Rated output current	0.3 A/point, 2.4 A/common	0.3 A/point, 1.6 A/common
Residual voltage	1.2 VDC max. (0.3 A DC between output and G terminal)	1.2 VDC max. (0.3 A DC between output and V terminal)
Leakage current	0.1 mA max.	
ON delay time	1.5 ms max.	
OFF delay time	1.5 ms max.	
Number of circuits per common	8 per common	
Load short-circuit detection current	2.4 A min./common	1.6 A min./common

Input Specifications

● Terminals with 16 Inputs

Item / Model	DRT2-ID16S	DRT2-ID16S-1
Internal I/O common	NPN	PNP
I/O points	16 inputs	
ON voltage	9 VDC min. (between each input terminal and V)	9 VDC min. (between each input terminal and G)
OFF voltage	5 VDC max. (between each input terminal and V)	5 VDC max. (between each input terminal and G)
OFF current	1 mA max.	
Input current	11 mA max./point (at 24 VDC) 3.0 mA min./point (at 11 VDC)	
ON delay time	1.5 ms max.	
OFF delay time	1.5 ms max.	
Number of circuits per common	16 per common	
Sensor short-circuit detection current	The total current for all of the following input points is monitored to detect sensor short-circuits. IN0/IN1, IN2/IN3, IN4/IN5, IN6/IN7, IN8/IN9, IN10/IN11, IN12/IN13, IN14/IN15	

● Terminal with 8 Inputs/8 Outputs

Item / Model	DRT2-MD16S	DRT2-MD16S-1
Internal I/O common	NPN	PNP
I/O points	8 inputs	
ON voltage	9 VDC min. (between each input terminal and V)	9 VDC min. (between each input terminal and G)
OFF voltage	5 VDC max. (between each input terminal and V)	5 VDC max. (between each input terminal and G)
OFF current	1 mA max.	
Input current	11 mA max./point (at 24 VDC) 3.0 mA min./point (at 11 VDC)	
ON delay time	1.5 ms max.	
OFF delay time	1.5 ms max.	
Number of circuits per common	8 per common	
Sensor short-circuit detection current	The total current for all of the following input points is monitored to detect sensor short-circuits. IN0/IN1, IN2/IN3, IN4/IN5, IN6/IN7	

Applicable Connectors (sold separately)

● OMRON Connectors

Model	Specifications	Compatible wire size
XN2A-1470	Spring-clamp style	Stranded wire 28 to 20 AWG (0.08 to 0.5 mm²) wire, 1.5 mm max. outer diameter including insulation

● Tyco Electronics Connectors

Model	Color of housing	Compatible wire size	
3-1473562-4	Orange	0.6 to 0.9 mm max. outer diameter including insulation	Wire size: 0.08 to 0.5 mm²
1-1473562-4	Red	0.9 to 1.0 mm max. outer diameter including insulation	
1473562-4	Yellow	1.0 to 1.15 mm max. outer diameter including insulation	
2-1473562-4	Blue	1.15 to 1.35 mm max. outer diameter including insulation	
4-1473562-4	Green	1.35 to 1.60 mm max. outer diameter including insulation	

● Sumitomo 3M Connectors

Model	Specifications/color of housing	Compatible wire size
37104-3101-000FL	Red	26 to 24 AWG (0.14 to 0.2 mm²) wire, 0.8 to 1.0 mm max. outer diameter including insulation
37104-3122-000FL	Yellow	26 to 24 AWG (0.14 to 0.2 mm²) wire, 1.0 to 1.2 mm max. outer diameter including insulation
37104-3163-000FL	Orange	26 to 24 AWG (0.14 to 0.2 mm²) wire, 1.2 to 1.6 mm max. outer diameter including insulation
37104-2124-000FL	Green	22 to 20 AWG (0.3 to 0.5 mm²) wire, 1.0 to 1.2 mm max. outer diameter including insulation
37104-2165-000FL	Blue	22 to 20 AWG (0.3 to 0.5 mm²) wire, 1.2 to 1.6 mm max. outer diameter including insulation
37104-2206-000FL	Gray	22 to 20 AWG (0.3 to 0.5 mm²) wire, 1.6 to 2.0 mm max. outer diameter including insulation

Dimensions

(Unit: mm)

DRT2-ID16S(-1)

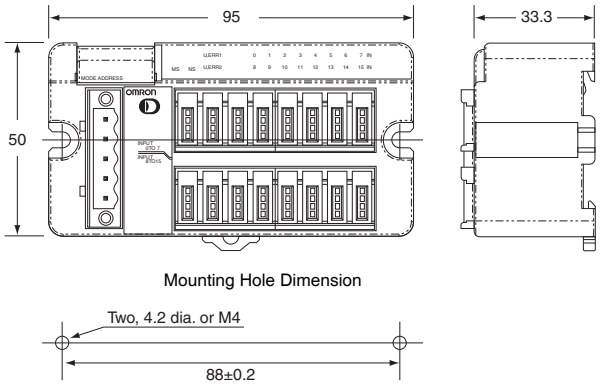

DRT2-MD16S(-1)

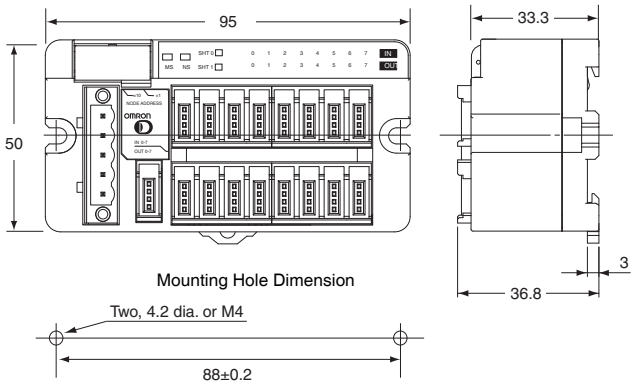

Wiring Diagrams

DRT2-ID16S (NPN)

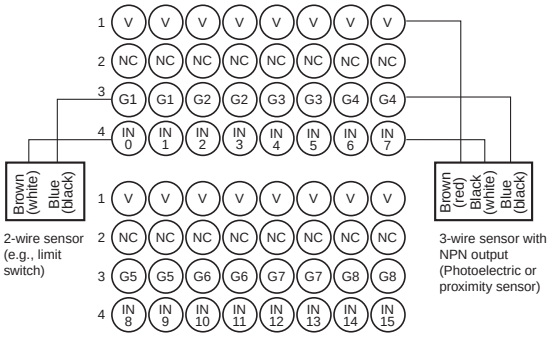

DRT2-ID16S-1 (PNP)

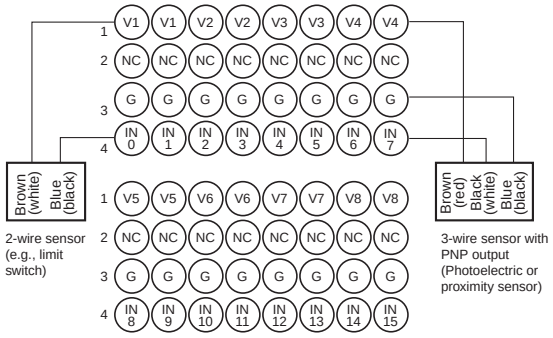

DRT2-MD16S (NPN)

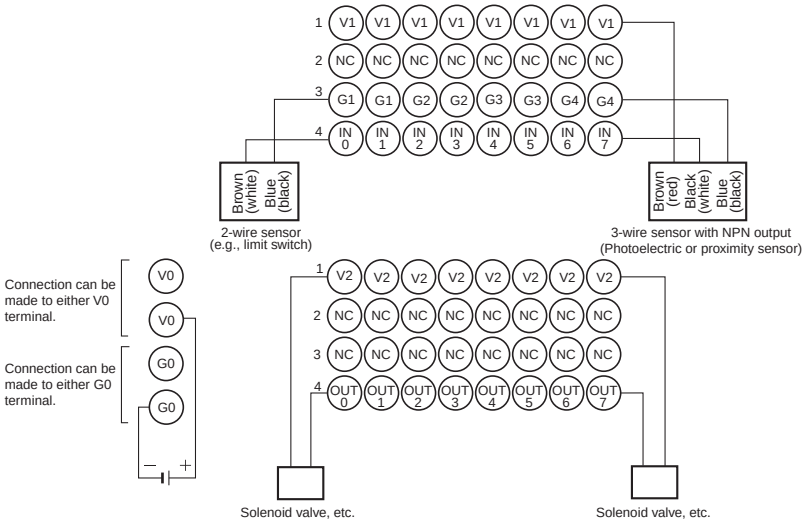

DRT2-MD16S-1 (PNP)

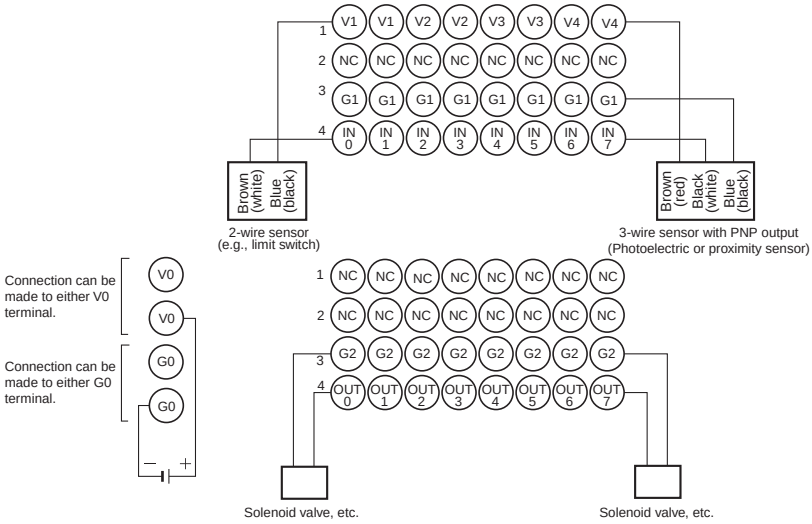

MIL Connector Terminals with Transistors

DRT2-□D32ML(-1)/□D16ML(-1)

Very Compact 16-/32-point Remote Terminals

- Used in combination with Interface Conversion Boards (e.g., D-Sub) to connect to a wide range of interfaces.
- 35 x 60 x 80 mm (W x D x H)

Smart Slave Functions

- Operation time monitor
- Contact operation counter
- Unit conduction time monitor
- Total ON time monitor
- Unit comments
- Connected device comments
- Network power supply voltage monitor
- I/O power supply monitor function
- Communications error log function
- Input filter (input or I/O only)
- Power-ON inrush current protection (input or I/O only)
- Communications speed auto-detection
- No need to wire Unit power supply
- Last maintenance date

Ordering Information

Specifications			I/O connections	Rated internal circuit power supply voltage	Rated I/O power supply voltage	Model
Inputs	NPN (+ common)	32 points	MIL connector	Supplied from the communications connector	24 VDC	**DRT2-ID32ML**
	PNP (- common)					**DRT2-ID32ML-1**
Outputs	NPN (- common)					**DRT2-OD32ML**
	PNP (+ common)					**DRT2-OD32ML-1**
I/O	NPN (input: + common, output: - common)	16 inputs/ 16 outputs				**DRT2-MD32ML**
	PNP (input: - common, output: + common)					**DRT2-MD32ML-1**
Inputs	NPN (+ common)	16 points	MIL connector			**DRT2-ID16ML**
	PNP (- common)					**DRT2-ID16ML-1**
Outputs	NPN (- common)					**DRT2-OD16ML**
	PNP (+ common)					**DRT2-OD16ML-1**
Inputs	NPN (+ common)		MIL connector (Connector with 10-cm cable)			**DRT2-ID16MLX**
	PNP (- common)					**DRT2-ID16MLX-1**
Outputs	NPN (- common)					**DRT2-OD16MLX**
	PNP (+ common)					**DRT2-OD16MLX-1**
Mounting Bracket						**SRT2-ATT02**

General Specifications

Communications power supply voltage	11 to 25 VDC (Supplied from the communications connector.)
Communications power supply current consumption	DRT2-ID16ML(-1) : 40 mA max. (24 VDC), 60 mA max. (11 VDC) DRT2-ID16MLX(-1) : 40 mA max. (24 VDC), 60 mA max. (11 VDC) DRT2-OD16ML(-1) : 45 mA max. (24 VDC), 75 mA max. (11 VDC) DRT2-OD16MLX(-1) : 45 mA max. (24 VDC), 75 mA max. (11 VDC) DRT2-ID32ML(-1) : 55 mA max. (24 VDC), 100 mA max. (11 VDC) DRT2-OD32ML(-1) : 70 mA max. (24 VDC), 120 mA max. (11 VDC) DRT2-MD32ML(-1) : 60 mA max. (24 VDC), 110 mA max. (11 VDC)
Noise immunity	Conforms to IEC61000-4-4, 2 kV (power line)
Vibration resistance	10 to 60 Hz, 0.7-mm double amplitude, 60 to 150 Hz, 50 m/s^2
Shock resistance	150m/s^2
Dielectric strength	500 VAC (between isolated circuits)
Insulation resistance	20 MΩ min.
Ambient operating temperature	-10°C to 55°C
Ambient operating humidity	25% to 85% (with no condensation)
Ambient operating atmosphere	No corrosive gases
Ambient storage temperature	-25°C to 65°C
Mounting method	DIN 35 mm-track mounting
Weight	120 g max. ✻

✻ The Connector Cable provided with the DRT2-ID16MLX(-1) and DRT2-OD16MLX(-1) is 10 g max.

Input Specifications

● 32-point Inputs Terminals with Connectors

Item / Model	DRT2-ID32ML	DRT2-ID32ML-1
Internal I/O common	NPN	PNP
I/O points	32 inputs	
ON voltage	17 VDC min. (between each input terminal and V)	17 VDC min. (between each input terminal and G)
OFF voltage	5 VDC max. (between each input terminal and V)	5 VDC max. (between each input terminal and G)
OFF current	1.0 mA max.	
Input current	24 VDC: 6.0 mA max./point 17 VDC: 3.0 mA max./point	
ON delay time	1.5 ms max.	
OFF delay time	1.5 ms max.	
Number of circuits per common	32 per common	

● 16-point Inputs/16-point Outputs Terminals with Connectors
● 16-point Inputs Terminals with Connectors

Model / Item	DRT2-MD32ML DRT2-ID16ML DRT2-ID16MLX	DRT2-MD32ML-1 DRT2-ID16ML-1 DRT2-ID16MLX-1
Internal I/O common	NPN	PNP
I/O points	16 inputs	
ON voltage	17 VDC min. (between each input terminal and V)	17 VDC min. (between each input terminal and G)
OFF voltage	5 VDC max. (between each input terminal and V)	5 VDC max. (between each input terminal and G)
OFF current	1.0 mA max.	
Input current	24 VDC: 6.0 mA max./point 17 VDC: 3.0 mA max./point	
ON delay time	1.5 ms max.	
OFF delay time	1.5 ms max.	
Number of simultaneously inputs	16	
Number of circuits per common	16 per common	

Output Specifications

● 32-point Outputs Terminals with Connectors

Item / Model	DRT2-OD32ML	DRT2-OD32ML-1
Internal I/O common	NPN	PNP
I/O points	32 outputs	
Rated output current	0.3 A/point, 4 A/common ✻	
Residual voltage	1.2 VDC max. (0.3 A DC between output and G terminal)	1.2 VDC max. (0.3 A DC between output and V terminal)
Leakage current	0.1 mA max.	
ON delay time	0.5 ms max.	
OFF delay time	1.5 ms max.	
Number of circuits per common	32 per common	

✻ The maximum total load current is 4 A.
The maximum current for the V and G terminals is 1 A per terminal.

● 16-point Inputs/16-point Outputs Terminals with Connectors
● 16-point Outputs Terminals with Connectors

Model / Item	DRT2-MD32ML DRT2-OD16ML DRT2-OD16MLX	DRT2-MD32ML-1 DRT2-OD16ML-1 DRT2-OD16MLX-1
Internal I/O common	NPN	PNP
I/O points	16 outputs	
Rated output current	0.3 A/point, 4 A/common ✻	
Residual voltage	1.2 VDC max. (0.3 A DC between output and G terminal)	1.2 VDC max. (0.3 A DC between output and V terminal)
Leakage current	0.1 mA max.	
ON delay time	0.5 ms max.	
OFF delay time	1.5 ms max.	
Number of circuits per common	16 per common	

✻ The maximum total load current is 2 A.
The maximum current for the V and G terminals is 1 A per terminal.

Applicable Connectors

● 32-point Models

Product		Model	Remarks
Flat Cable, crimp terminals		XG4M-4030-T	
Stranded-wire cable, crimp terminals	Socket	XG5M-4032-N	For AWG24 wire
		XG5M-4035-N	For AWG26 to AWG28 wire
	Partial Cover	XG5S-2001	
	Hood Cover ✻	XG5S-4022	

✻ DeviceNet connectors for multi-drop wiring cannot be used with the Hood Cover.

● 16-point Models

Product		Model	Remarks
Flat Cable, crimp terminals		XG4M-2030-T	
Stranded-wire cable, crimp terminals	Socket	XG5M-2032-N	For AWG24 wire
		XG5M-2035-N	For AWG26 to AWG28 wire
	Partial Cover	XG5S-1001	
	Hood Cover ✻	XG5S-2012	

Applicable Cables

● Cables for Connector Terminal Conversion Units (16 Points)

Cables with Connectors (1-to-1 Connection)

Model	Applicable cable	Connectable model	Remarks
DRT2-ID16ML DRT2-ID16ML-1 DRT2-OD16ML DRT2-OD16ML-1	XW2Z-RO□C	XW2R-J20G-T XW2R-E20G-T XW2R-P20G-T XW2C-20G6-IO16	Connector Terminal Conversion Unit

● Cables for I/O Relay Terminals (16 Points)

Cables with Connectors (1-to-1 Connection)

Model	Applicable cable	Connectable model	Remarks
DRT2-ID16ML	XW2Z-RI□C	G7TC-ID16 G7TC-IA16	For I/O Relay Terminal inputs
DRT2-ID16ML-1	--	--	(No applicable model)
DRT2-OD16ML	XW2Z-RO□C	G7TC-OC16/OC08 G70D-SOC16/VSOC16 G70D-FOM16/VFOM16 G70A-ZOC16-3 G70D-SOC08 G70R-SOC08	For I/O Relay Terminal outputs
DRT2-OD16ML-1	XW2Z-RI□C	G7TC-OC16-1	For I/O Relay Terminal outputs
	XW2Z-RO□C	G70D-SOC16-1 G70D-FOM16-1 G70A-Z0C16-4	For I/O Relay Terminal outputs

● Cables for Connector Terminal Conversion Units (32 Points)

Cables with Connectors (1-to-2 Connection)

Model	Applicable cable	Connectable model	Remarks
DRT2-ID32ML DRT2-ID32ML-1 DRT2-OD32ML DRT2-OD32ML-1 DRT2-MD32ML DRT2-MD32ML-1	XW2Z-□□□N	XW2R-J20G-T (two units) XW2R-E20G-T (two units) XW2R-P20G-T (two units) XW2C-20G6-IO16 (two units)	Connector Terminal Conversion Unit (20 pins)

Cables with Connectors (1-to-1 Connection)

Model	Applicable cable	Connectable model	Remarks
DRT2-ID32ML DRT2-ID32ML-1 DRT2-OD32ML DRT2-OD32ML-1 DRT2-MD32ML DRT2-MD32ML-1	XW2Z-□□□K	XW2R-J40G-T XW2R-E40G-T XW2R-P40G-T	Connector Terminal Conversion Unit (40 pins)

● Cables for I/O Relay Terminals (32 Points)

Cables with Connectors (1-to-2 Connection)

Model	Applicable cable	Connectable model	Remarks
DRT2-ID32ML	XW2Z-RI□-□-D1	G7TC-ID16 G7TC-IA16	For I/O Relay Terminal inputs
DRT2-ID32ML-1	--	--	(No applicable model)
DRT2-OD32ML	XW2Z-RO□-□-D1	G7TC-OC16/OC08 G70D-SOC16/VSOC16 G70D-FOM16/VFOM16 G70A-ZOC16-3 G70D-SOC08 G70R-SOC08	For I/O Relay Terminal outputs
DRT2-OD32ML-1	XW2Z-RI□-□-D1	G7TC-OC16-1	For I/O Relay Terminal outputs
	XW2Z-RO□-□-D1	G70D-SOC16-1 G70D-FOM16-1 G70A-ZOC16-4	
DRT2-MD32ML	XW2Z-RM□-□-D1	[For input] G7TC-ID16 G7TC-IA16 [For output] G7TC-OC16/OC08 G70D-SOC16/VSOC16 G70D-FOM16/VFOM16 G70A-ZOC16-3 G70D-SOC08 G70R-SOC08	For I/O Relay Terminal inputs For I/O Relay Terminal outputs
DRT2-MD32ML-1	XW2Z-RM□-□-D1	[For input] -- [For output] G70D-SOC16-1 G70D-FOM16-1 G70A-ZOC16-4	For I/O Relay Terminal inputs For I/O Relay Terminal outputs

● Stranded-wire Cables with Crimp Terminals

Model	Applicable cable	Remarks
DRT2-ID16ML (-1) DRT2-OD16ML (-1)	XW2Z-RY□C	20-pin connector
DRT2-ID16ML (-1) DRT2-OD16ML (-1) DRT2-MD16ML (-1)	XW2Z-RY□C-D1	40-pin connector

● Stranded-wire Cables

Model	Applicable cable	Remarks
DRT2-ID16ML (-1) DRT2-OD16ML (-1)	XW2Z-RA□C	20-pin connector
DRT2-ID16ML (-1) DRT2-OD16ML (-1) DRT2-MD16ML (-1)	XW2Z-RA□C-D1	40-pin connector

Dimensions

(Unit: mm)

DRT2-ID32ML(-1)
DRT2-OD32ML(-1)
DRT2-MD32ML(-1)

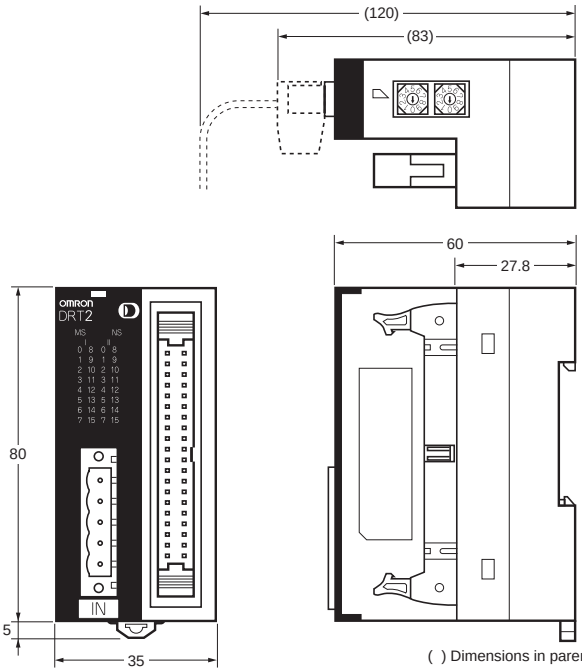

( ) Dimensions in parentheses are reference values.

DRT2-ID16ML(-1)
DRT2-OD16ML(-1)
DRT2-ID16MLX(-1)
DRT2-OD16MLX(-1)

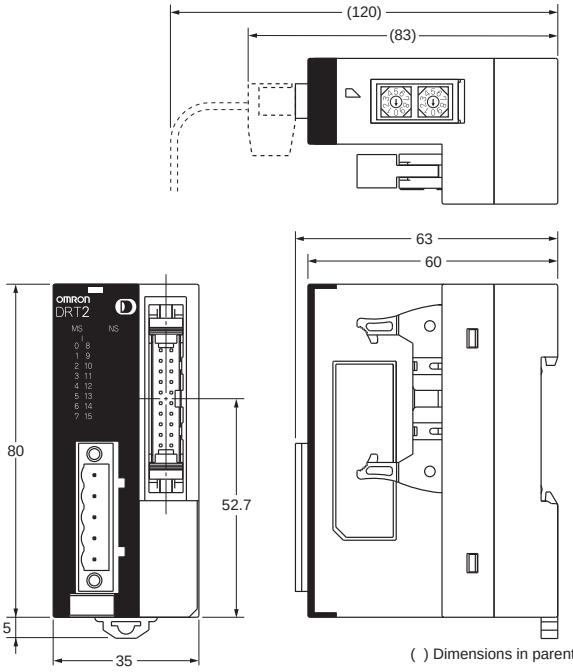

( ) Dimensions in parentheses are reference values.

● Mounting Bracket B (Accessory)

SRT2-ATT02

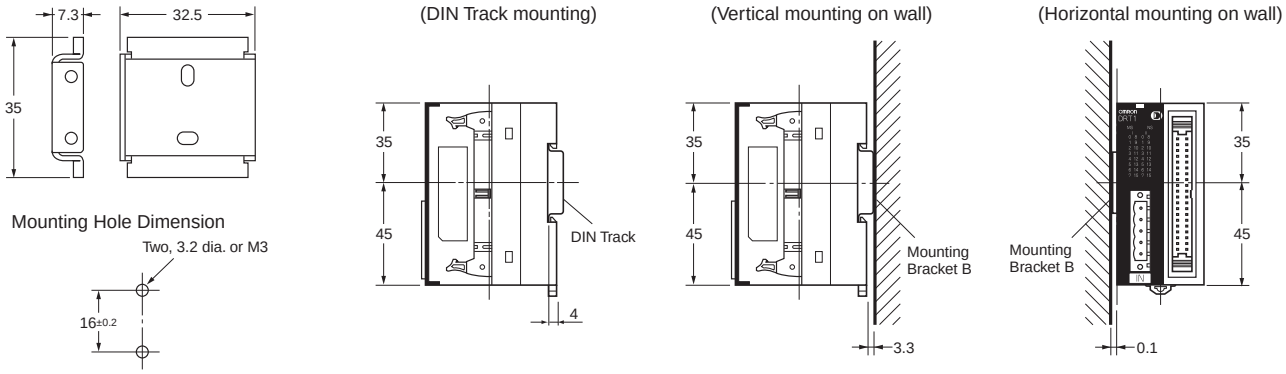

Wiring Diagrams

DRT2-ID32ML

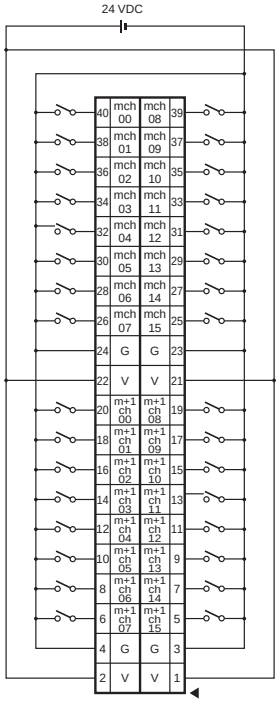

DRT2-ID32ML-1

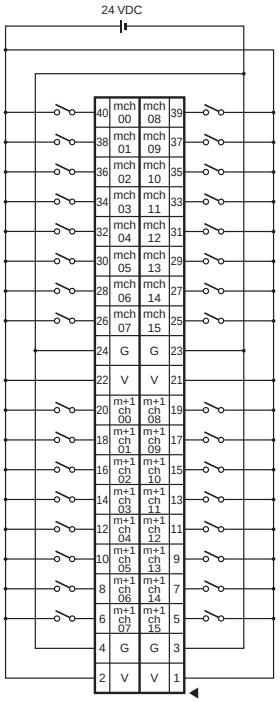

DRT2-OD32ML

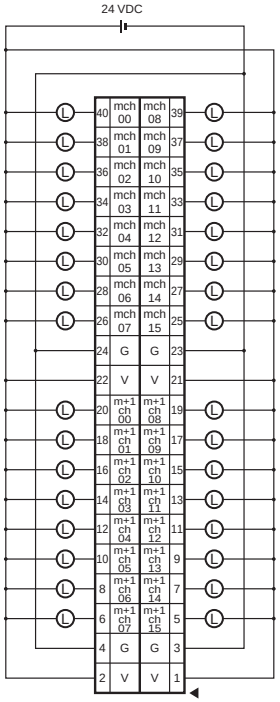

DRT2-OD32ML-1

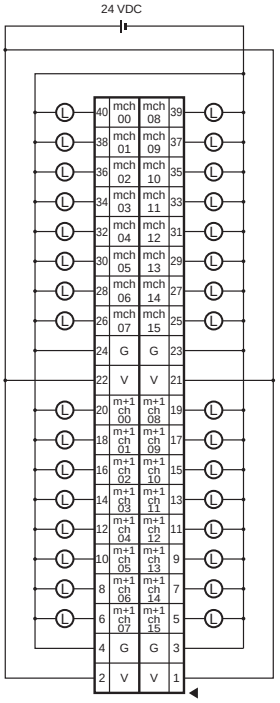

DRT2-MD32ML

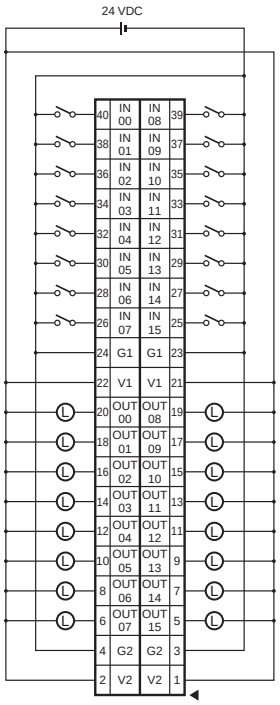

DRT2-MD32ML-1

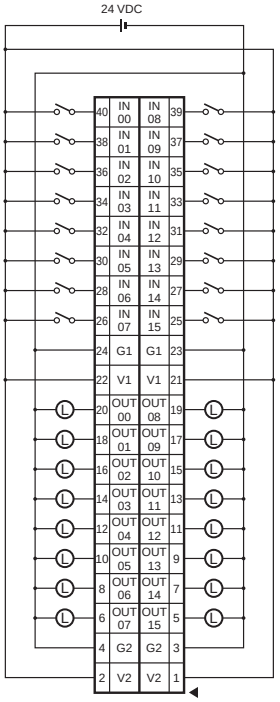

DRT2-ID16ML(X) (NPN)

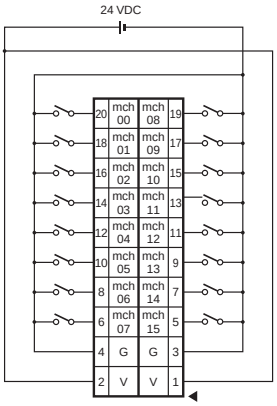

DRT2-ID16ML(X)-1 (PNP)

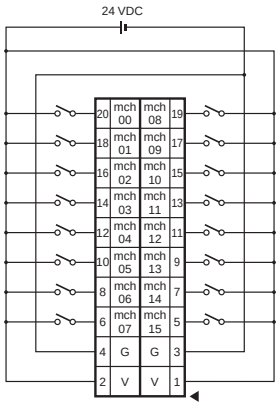

DRT2-OD16ML(X) (NPN)

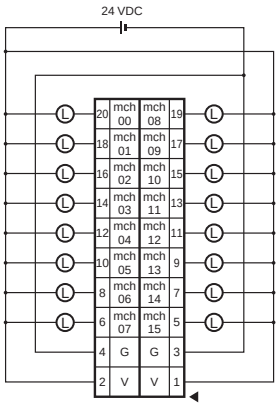

DRT2-OD16ML(X)-1 (PNP)

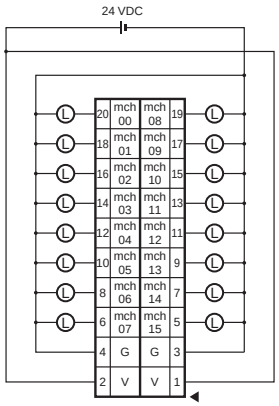

Wiring Diagram of Connector Cable Provided with the DRT2-ID16MLX(-1) and DRT2-OD16MLX(-1)

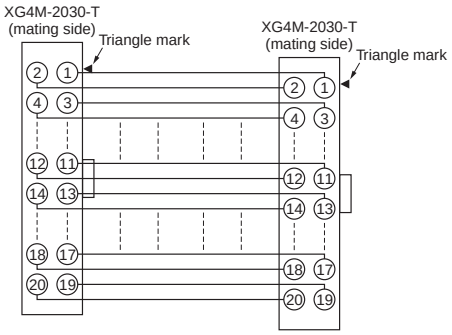

Board Terminals with MIL Connector

DRT2-□D32B(-1)/□D32BV(-1)

First Board-type Terminals for Smart Slaves!

- Easily modified to handle an array of I/O interfaces and eliminates much on-site wiring.
- User boards attach easily to the DRT2-□D32BV(-1) using screws.

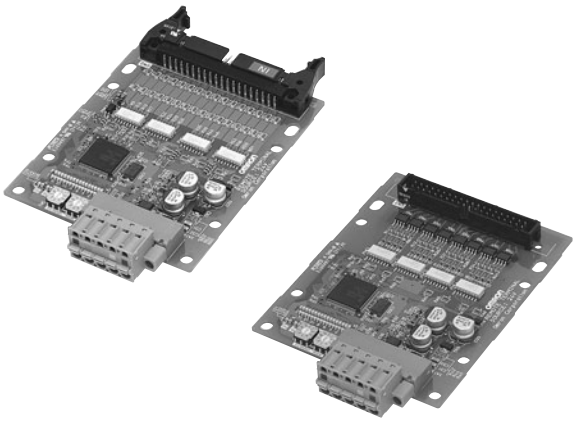

Smart Slave Functions

Operation time monitor	Contact operation counter	Unit conduction time monitor
Total ON time monitor	Unit comments	Connected device comments
Network power supply voltage monitor	I/O power supply monitor function	Communications error log function
Input filter (input or I/O only)	Power-ON inrush current protection (input or I/O only)	
Communications speed auto-detection	No need to wire Unit power supply	Last maintenance date

Ordering Information

● Parallel Mounting MIL Connector

Specifications			I/O connections	Rated internal circuit power supply voltage	Rated I/O power supply voltage	Model
Inputs	NPN (+ common)	32 inputs	MIL connector	Supplied from communications connector.	24 VDC	DRT2-ID32B
	PNP (- common)					DRT2-ID32B-1
Outputs	NPN (- common)	32 outputs				DRT2-OD32B
	PNP (+ common)					DRT2-OD32B-1
I/O	NPN (input: + common, output: - common)	16 inputs/ 16 outputs				DRT2-MD32B
	PNP (input: - common, output: + common)					DRT2-MD32B-1

● Perpendicular Mounting MIL Connector

Specifications			I/O connections	Rated internal circuit power supply voltage	Rated I/O power supply voltage	Model
Inputs	NPN (+ common)	32 inputs	MIL connector	Supplied from communications connector.	24 VDC	DRT2-ID32BV
	PNP (- common)					DRT2-ID32BV-1
Outputs	NPN (- common)	32 outputs				DRT2-OD32BV
	PNP (+ common)					DRT2-OD32BV-1
I/O	NPN (input: + common, output: - common)	16 inputs/ 16 outputs				DRT2-MD32BV
	PNP (input: - common, output: + common)					DRT2-MD32BV-1

General Specifications

Communications power supply voltage	11 to 25 VDC (Supplied from the communications connector.)
Communications power supply current consumption	DRT2-ID32B(-1) : 45 mA max. (24 VDC), 100 mA max. (11 VDC) DRT2-OD32B(-1) : 55 mA max. (24 VDC), 120 mA max. (11 VDC) DRT2-MD32B(-1) : 50 mA max. (24 VDC), 110 mA max. (11 VDC) DRT2-ID32BV(-1) : 45 mA max. (24 VDC), 100 mA max. (11 VDC) DRT2-OD32BV(-1) : 55 mA max. (24 VDC), 120 mA max. (11 VDC) DRT2-MD32BV(-1) : 50 mA max. (24 VDC), 110 mA max. (11 VDC)
Noise immunity	Conforms to IEC61000-4-4, 2 kV (power line)
Vibration resistance	10 to 60 Hz, 0.7-mm double amplitude, 60 to 150 Hz, 50 m/s² for 80 min each in the X, Y, and Z directions
Shock resistance	150m/s², 6 directions, 3 times each
Dielectric strength	500 VAC (between isolated circuits)
Insulation resistance	20 MΩ min. (between isolated circuits)
Ambient operating temperature	-10°C to 55°C
Ambient operating humidity	25% to 85% (with no condensation)
Ambient operating atmosphere	No corrosive gases
Ambient storage temperature	-25°C to 65°C
Mounting method	M4 screw mounting
Weight	50 g max.

Input Specifications

● 32-point Inputs Terminals with Connectors

Item / Model	DRT2-ID32B DRT2-ID32BV	DRT2-ID32B-1 DRT2-ID32BV-1
Internal I/O common	NPN	PNP
I/O points	32 inputs	
ON voltage	17 VDC min. (between each input terminal and V)	17 VDC min. (between each input terminal and G)
OFF voltage	5 VDC max. (between each input terminal and V)	5 VDC max. (between each input terminal and G)
OFF current	1.0 mA max.	
Input current	24 VDC: 6.0 mA max./point 17 VDC: 3.0 mA max./point	
ON delay time	1.5 ms max.	
OFF delay time	1.5 ms max.	
Number of circuits per common	32 per common	

● 16-point Inputs/16-point Outputs Terminals with Connectors

Item / Model	DRT2-MD32B DRT2-MD32BV	DRT2-MD32B-1 DRT2-MD32BV-1
Internal I/O common	NPN	PNP
I/O points	16 inputs	
ON voltage	17 VDC min. (between each input terminal and V)	17 VDC min. (between each input terminal and G)
OFF voltage	5 VDC max. (between each input terminal and V)	5 VDC max. (between each input terminal and G)
OFF current	1.0 mA max.	
Input current	24 VDC: 6.0 mA max./point 17 VDC: 3.0 mA max./point	
ON delay time	1.5 ms max.	
OFF delay time	1.5 ms max.	
Number of simultaneously inputs	16	
Number of circuits per common	16 per common	

Output Specifications

● 32-point Outputs Terminals with Connectors

Item / Model	DRT2-OD32B DRT2-OD32BV	DRT2-OD32B-1 DRT2-OD32BV-1
Internal I/O common	NPN	PNP
I/O points	32 outputs	
Rated output current	0.3 A/point, 4 A/common ✻	
Residual voltage	1.2 VDC max. (0.3 A DC between output and G terminal)	1.2 VDC max. (0.3 A DC between output and V terminal)
Leakage current	0.1 mA max.	
ON delay time	0.5 ms max.	
OFF delay time	1.5 ms max.	
Number of circuits per common	32 per common	

✻ The maximum total load current is 4 A.
The maximum current for the V and G terminals is 1 A per terminal. Do not exceed these values.

● 16-point Inputs/16-point Outputs Terminals with Connectors

Item / Model	DRT2-MD32B DRT2-MD32BV	DRT2-MD32B-1 DRT2-MD32BV-1
Internal I/O common	NPN	PNP
I/O points	16 outputs	
Rated output current	0.3 A/point, 2 A/common ✻	
Residual voltage	1.2 VDC max. (0.3 A DC between output and G terminal)	1.2 VDC max. (0.3 A DC between output and V terminal)
Leakage current	0.1 mA max.	
ON delay time	0.5 ms max.	
OFF delay time	1.5 ms max.	
Number of circuits per common	16 per common	

✻ The maximum total load current is 2 A.
The maximum current for the V and G terminals is 1 A per terminal. Do not exceed these values.

Dimensions

(Unit: mm)

DRT2-ID32B(-1)
DRT2-OD32B(-1)
DRT2-MD32B(-1)

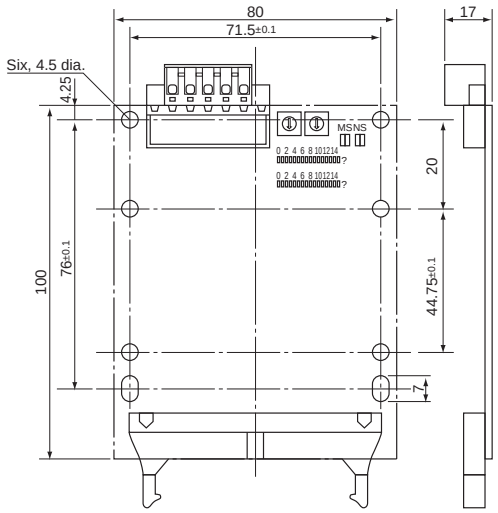

DRT2-ID32BV(-1)
DRT2-OD32BV(-1)
DRT2-MD32BV(-1)

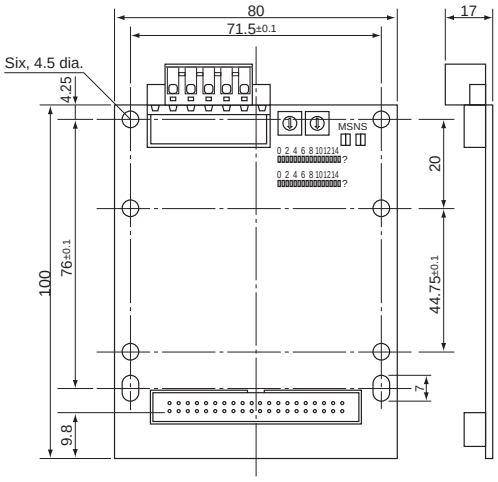

Wiring Diagrams

DRT2-ID32B
DRT2-ID32BV
(NPN)

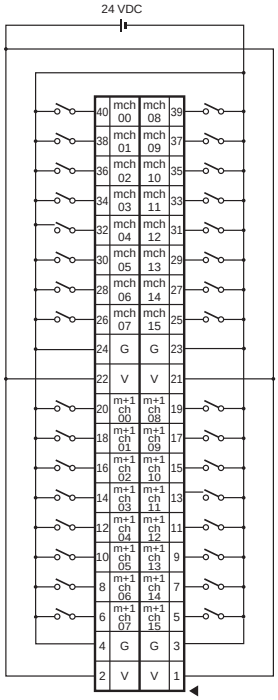

DRT2-ID32B-1
DRT2-ID32BV-1
(PNP)

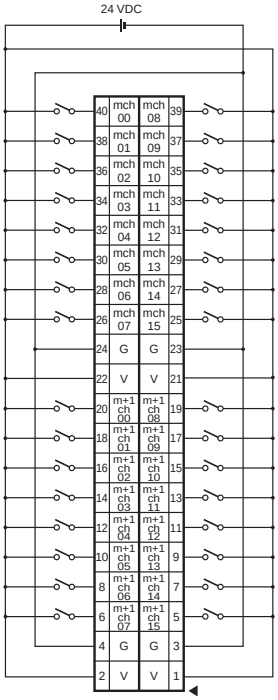

DRT2-OD32B
DRT2-OD32BV
(NPN)

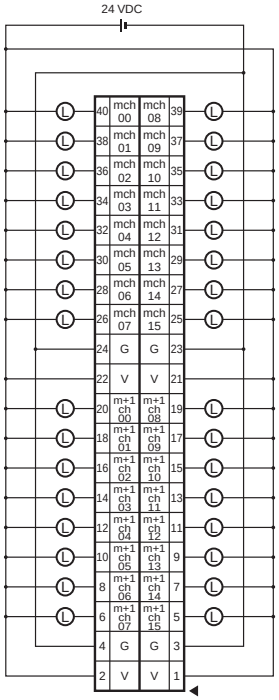

DRT2-OD32B-1
DRT2-OD32BV-1
(PNP)

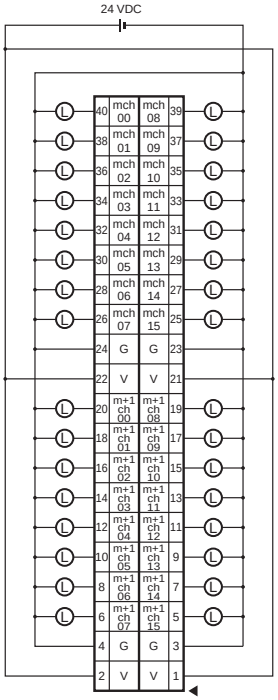

DRT2-MD32B
DRT2-MD32BV
(NPN)

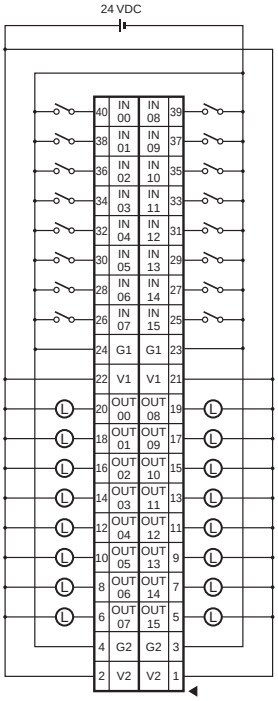

DRT2-MD32B-1
DRT2-MD32BV-1
(PNP)

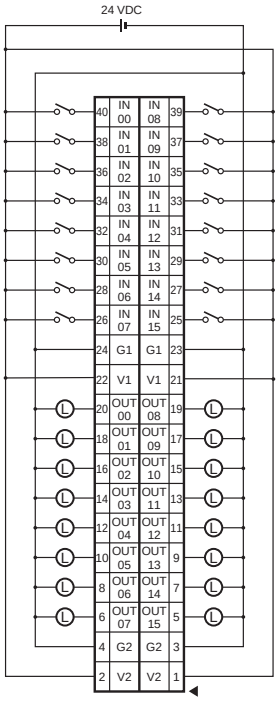

Screw-less Clamp Terminals with Transistors

DRT2-□D16SL(H)(-1)/□D32SLH(-1)

Reduced Wiring and Labor on Factory Sites with Screw-less Terminal Wiring

- Screw-less structure eliminates tightening work.
- Detachable terminal blocks for easier maintenance.
- Single-step wiring by simply inserting pole terminals.

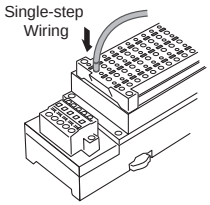

- Applicable wire sizes range from AWG24 to AWG16 (0.2 to 1.25 mm^2 dia.)

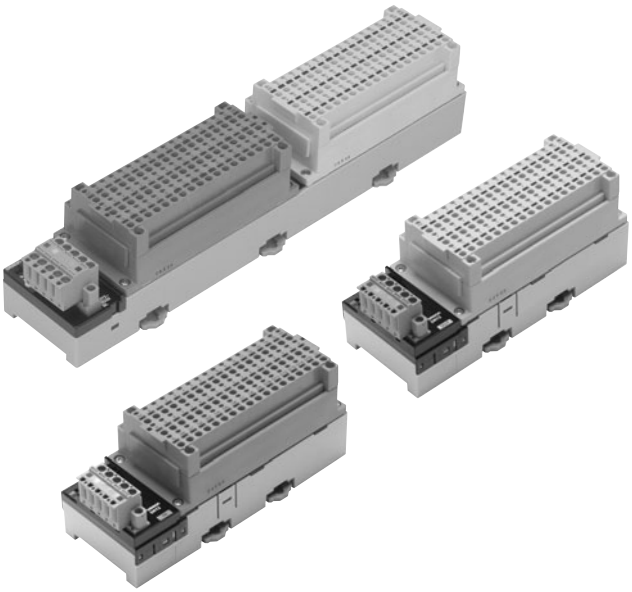

Smart Slave Functions

Operation time monitor	Contact operation counter	Unit conduction time monitor	Total ON time monitor
Unit comments	Connected device comments	Network power supply voltage monitor	I/O power supply monitor function
Communications error log function	Input filter (input or I/O only)	Power-ON inrush current protection (input or I/O only)	
Sensor power supply short-circuit detection (input or I/O only)	Disconnected sensor detection (input or I/O only)	External load short-circuit detection (output only)	Disconnection detection (output or I/O only)
Removable terminal block	Communications speed auto-detection	No need to wire Unit power supply	Last maintenance date

Ordering Information

Short/disconnection detection	Specifications				I/O connections	Rated internal circuit power supply voltage	Rated I/O power supply voltage	Model
Supported	Inputs	NPN (+ common)	16 points		Clamp terminals	Supplied from communications connector.	24 VDC	DRT2-ID16SLH
		PNP (- common)						DRT2-ID16SLH-1
	Outputs	NPN (- common)						DRT2-OD16SLH
		PNP (+ common)						DRT2-OD16SLH-1
Not supported	Inputs	NPN (+ common)						DRT2-ID16SL
		PNP (- common)						DRT2-ID16SL-1
	Outputs	NPN (- common)						DRT2-OD16SL
		PNP (+ common)						DRT2-OD16SL-1
Supported	Inputs	NPN (+ common)	32 points					DRT2-ID32SLH
		PNP (- common)						DRT2-ID32SLH-1
	Outputs	NPN (- common)						DRT2-OD32SLH
		PNP (+ common)						DRT2-OD32SLH-1
	I/O	NPN (input: + common, output: - common)	16 inputs/ 16 outputs					DRT2-MD32SLH
		PNP (input: - common, output: + common)						DRT2-MD32SLH-1

General Specifications

Communications power supply voltage	11 to 25 VDC (Supplied from the communications connector.)
Communications power supply current consumption	DRT2-ID16SL(-1) : 30 mA max. (24 VDC), 55 mA max. (11 VDC) DRT2-OD16SL(-1) : 35 mA max. (24 VDC), 65 mA max. (11 VDC) DRT2-ID16SLH(-1) : 35 mA max. (24 VDC), 65 mA max. (11 VDC) DRT2-OD16SLH(-1) : 35 mA max. (24 VDC), 70 mA max. (11 VDC) DRT2-ID32SL : 55 mA max. (24 VDC), 100 mA max. (11 VDC) DRT2-ID32SL-1 : 55 mA max. (24 VDC), 90 mA max. (11 VDC) DRT2-OD32SL : 50 mA max. (24 VDC), 80 mA max. (11 V DC) DRT2-OD32SL-1 : 50 mA max. (24 VDC), 75 mA max. (11 VDC) DRT2-MD32SL(-1) : 50 mA max. (24 VDC), 80 mA max. (11 VDC) DRT2-ID32SLH : 65 mA max. (24 VDC), 100 mA max. (11 VDC) DRT2-ID32SLH-1 : 65 mA max. (24 VDC), 105 mA max. (11 VDC) DRT2-OD32SLH : 55 mA max. (24 VDC), 80 mA max. (11 VDC) DRT2-OD32SLH-1 : 55 mA max. (24 VDC), 85 mA max. (11 VDC) DRT2-MD32SLH(-1) : 60 mA max. (24 VDC), 90 mA max. (11 VDC)
Noise immunity	Conforms to IEC61000-4-4, 2 kV (power line)
Vibration resistance	10 to 60 Hz, 0.7-mm double amplitude, 60 to 150 Hz, 50 m/s^2 for 80 min each in the X, Y, and Z directions
Shock resistance	150m/s^2, 6 directions, 3 times each
Dielectric strength	500 VAC (between isolated circuits)
Insulation resistance	20 MΩ min. (between isolated circuits)
Ambient operating temperature	-10°C to 55°C
Ambient operating humidity	25% to 85% (with no condensation)
Ambient operating atmosphere	No corrosive gases
Ambient storage temperature	-20°C to 65°C
Mounting method	DIN 35 mm-track mounting
Weight	480 g max.

I/O Specifications

● 16-point Inputs Terminals with Transistors (Input Specifications)

Item / Model	DRT2-ID16SL	DRT2-ID16SL-1	DRT2-ID16SLH	DRT2-ID16SLH-1
Internal I/O common	NPN	PNP	NPN	PNP
Input points	16 inputs			
I/O power supply voltage	20.4 to 26.4 VDC (24 VDC -15%/+10%)			
Input current	24 VDC: 6.0 mA max./point 17 VDC: 3.0 mA max./point			
Input resistance	4 kΩ			
ON delay time	1.5 ms max.			
OFF delay time	1.5 ms max.			
ON voltage	15 VDC min. (between each input terminal and V)	15 VDC min. (between each input terminal and G)	15 VDC min. (between each input terminal and V)	15 VDC min. (between each input terminal and G)
OFF voltage	5 VDC max. (between each input terminal and V)	5 VDC max. (between each input terminal and G)	5 VDC max. (between each input terminal and V)	5 VDC max. (between each input terminal and G)
ON current	3.0 mA max.			
OFF current	1.0 mA max.			
Number of circuits per common	16 per common			
Power short-circuit protection	--		Operates at 50 mA/point min.	
Disconnection detection	--		Operates at 0.3 mA/point max.	
Input power supply current	100 mA per point		50 mA per point	

● 32-point Inputs Terminals with Transistors (Input Specifications)

Item / Model	DRT2-ID32SLH	DRT2-ID32SLH-1
Internal I/O common	NPN	PNP
Input points	32 inputs	
I/O power supply voltage	20.4 to 26.4 VDC (24 VDC -15%/+10%)	
Input current	6.0 mA6.0 mA max. per point at 24 VDC 3.0 mA max. per point at 17 VDC	
Input resistance	4 kΩ	
ON delay time	1.5 ms max.	
OFF delay time	1.5 ms max.	
ON voltage	15 VDC min. (between each input terminal and V)	15 VDC min. (between each input terminal and G)
OFF voltage	5 VDC max. (between each input terminal and V)	5 VDC max. (between each input terminal and G)
ON current	3 mA min.	
OFF current	1.0 mA max.	
Number of circuits per common	16 per common	
Power short-circuit protection	Operates at 50 mA/point min.	
Disconnection detection	Operates at 0.3 mA/point max.	

●16-point Outputs Terminals with Transistors (Output Specifications)

Item / Model	DRT2-OD16SL	DRT2-OD16SL-1	DRT2-OD16SLH	DRT2-OD16SLH-1
Internal I/O common	NPN	PNP	NPN	PNP
I/O points	16 outputs			
I/O power supply voltage	20.4 to 26.4 VDC (24 VDC -15%/+10%)			
Output current	0.5 A per point, 4 A per common			
Residual voltage	1.2 V max.			
Leakage current	0.1 mA max.		0.1 mA max. (See Note: 1.)	
ON delay time	0.5 ms max.			
OFF delay time	1.5 ms max.			
Disconnection detection	--		(See Note: 2.)	
Output power supply current	100 mA per point			
Output for errors	According to hold/clear setting for errors (default: clear)			

Note 1: To enable detection of external load disconnections, a current of 0.1 mA or less is output to the load even when the output is OFF. Make sure that the load will not operate for this current.
Note 2: Disconnection detection can be used when the load current is 3 mA or higher. If the load current is less than 3 mA, disconnections may be falsely detected.

●32-point Outputs Terminals with Transistors (Output Specifications)

Item / Model	DRT2-OD32SLH	DRT2-OD32SLH-1
Internal I/O common	NPN	PNP
I/O points	32 outputs	
I/O power supply voltage	20.4 to 26.4 VDC (24 VDC -15%/+10%)	
Output current	0.5 A per point, 4 A per common	
Residual voltage	1.2 V max.	
Leakage current	0.1 mA max. (See Note: 1.)	
ON delay time	0.5 ms max.	
OFF delay time	1.5 ms max.	
Disconnection detection	(See Note: 2.)	
Output for errors	According to hold/clear setting for errors (default: clear)	

Note 1: To enable detection of external load disconnections, a current of 0.1 mA or less is output to the load even when the output is OFF. Make sure that the load will not operate for this current.
Note 2: Disconnection detection can be used when the load current is 3 mA or higher. If the load current is less than 3 mA, disconnections may be falsely detected.

●16-point Inputs/16-point Outputs Terminals with Transistors (Input Specifications)

Item / Model	DRT2-MD32SLH	DRT2-MD32SLH-1
Internal I/O common	NPN	PNP
Input points	16 inputs	
I/O power supply voltage	20.4 to 26.4 VDC (24 VDC -15%/+10%)	
Input current	6.0 mA max. per point at 24 VDC 3.0 mA max. per point at 17 VDC	
Input resistance	4 kΩ	
ON delay time	1.5 ms max.	
OFF delay time	1.5 ms max.	
ON voltage	15 VDC min. (between each input terminal and V)	15 VDC min. (between each input terminal and G)
OFF voltage	5 VDC max. (between each input terminal and V)	5 VDC max. (between each input terminal and G)
ON current	3 mA min.	
OFF current	1.0 mA max.	
Number of circuits per common	16 per common	
Power short-circuit protection	Operates at 50 mA/point min.	
Disconnection detection	Operates at 0.3 mA/point max	

●16-point Inputs/16-point Outputs Terminals with Transistors (Output Specifications)

Item / Model	DRT2-MD32SLH	DRT2-MD32SLH-1
Internal I/O common	NPN	PNP
I/O points	16 outputs	
I/O power supply voltage	20.4 to 26.4 VDC (24 VDC -15%/+10%)	
Output current	0.5 A per point, 4 A per common	
Residual voltage	1.2 V max.	
Leakage current	0.1 mA max. (See Note: 1.)	
ON delay time	0.5 ms max.	
OFF delay time	1.5 ms max.	
Disconnection detection	(See Note: 2.)	
Output for errors	According to hold/clear setting for errors (default: clear)	

Note 1: To enable detection of external load disconnections, a current of 0.1 mA or less is output to the load even when the output is OFF. Make sure that the load will not operate for this current.
Note 2: Disconnection detection can be used when the load current is 3 mA or higher. If the load current is less than 3 mA, disconnections may be falsely detected.

Dimensions

(Unit: mm)

DRT2-ID16SLH(-1)
DRT2-OD16SLH(-1)
DRT2-ID16SL(-1)
DRT2-OD16SL(-1)

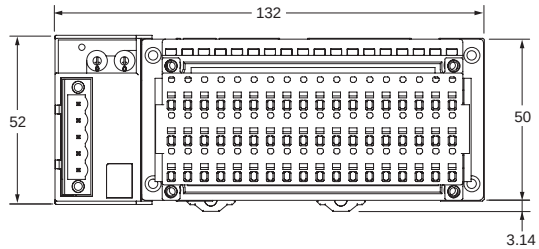

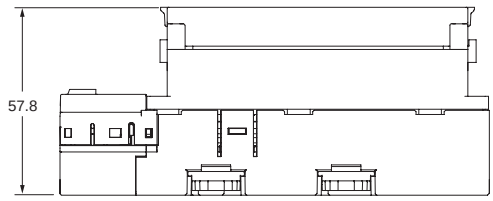

DRT2-ID32SLH(-1)
DRT2-OD32SLH(-1)
DRT2-MD32SLH(-1)

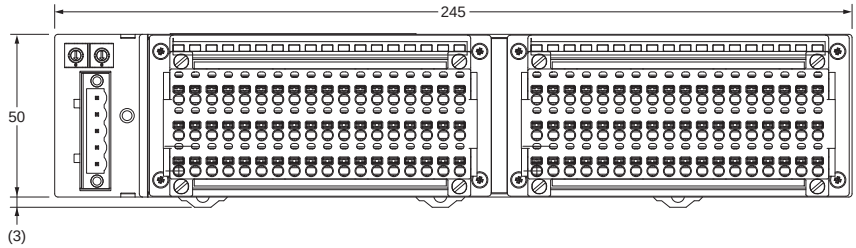

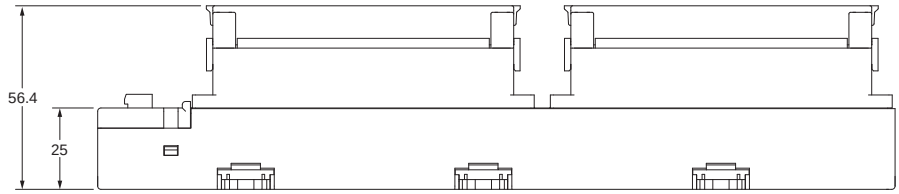

Wiring Diagrams

DRT2-ID16SL
(NPN)

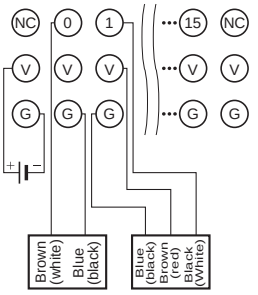

Two-wire sensor (Limit switch, etc.)
Three-wire sensor with NPN output (e.g., photoelectric sensor or proximity sensor)

DRT2-ID16SL-1
(PNP)

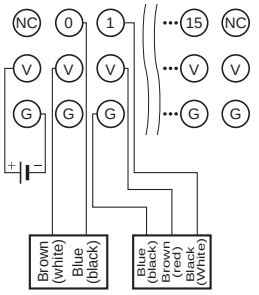

Two-wire sensor (Limit switch, etc.)
Three-wire sensor with PNP output (e.g., photoelectric sensor or proximity sensor)

DRT2-ID16SLH
(NPN)

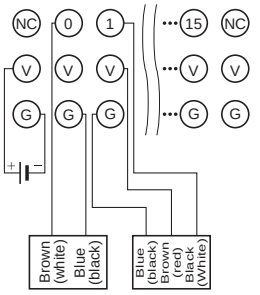

Two-wire sensor (Limit switch, etc.)
Three-wire sensor with NPN output (e.g., photoelectric sensor or proximity sensor)

DRT2-ID16SLH-1
(PNP)

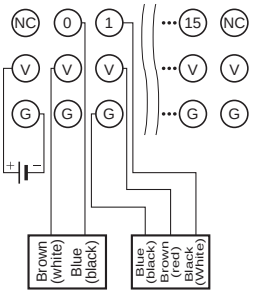

Two-wire sensor (Limit switch, etc.)
Three-wire sensor with PNP output (e.g., photoelectric sensor or proximity sensor)

DRT2-ID32SLH (NPN)

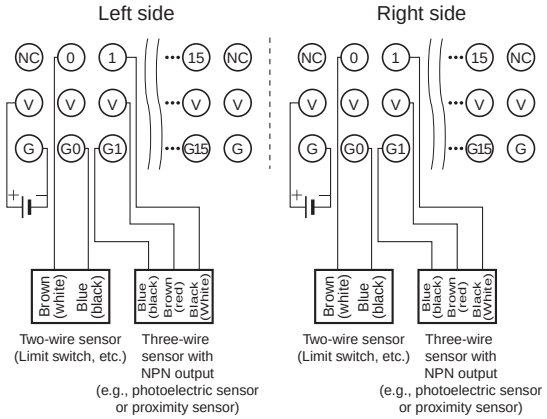

DRT2-ID32SLH-1 (PNP)

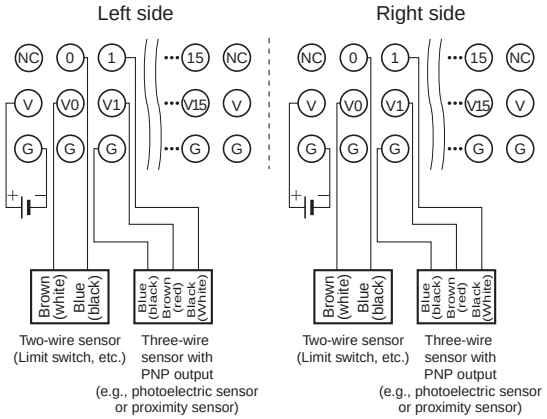

DRT2-OD16SL (NPN)

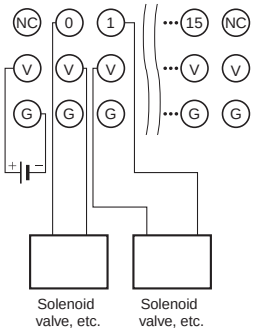

DRT2-OD16SL-1 (PNP)

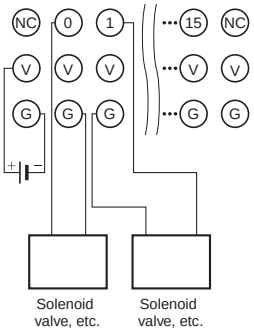

DRT2-OD16SLH (NPN)

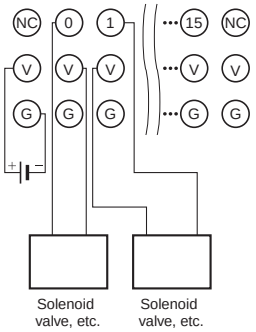

DRT2-OD16SLH-1 (PNP)

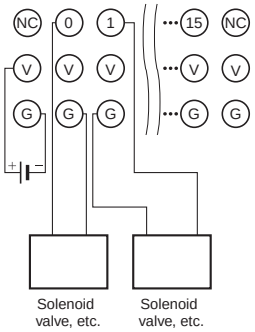

DRT2-OD32SLH (NPN)

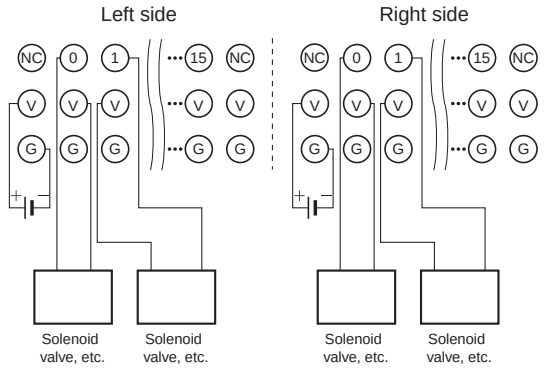

DRT2-OD32SLH-1 (PNP)

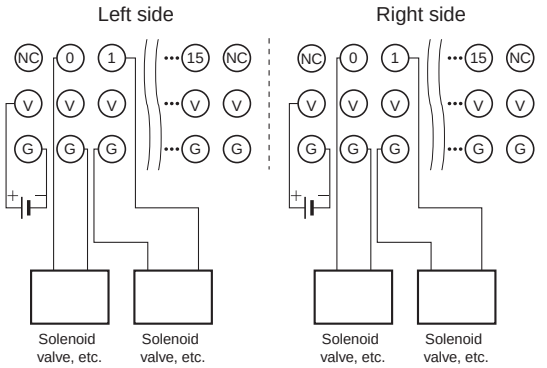

DRT2-MD32SLH (NPN)

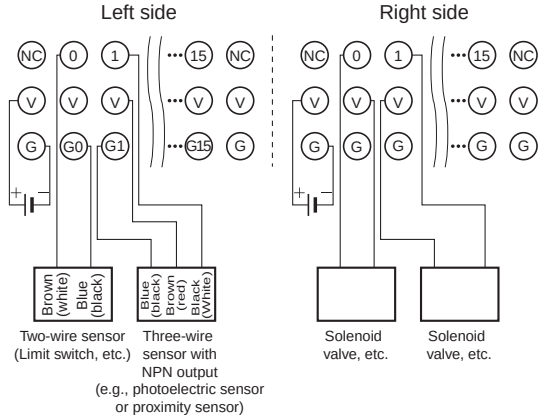

DRT2-MD32SLH-1 (PNP)

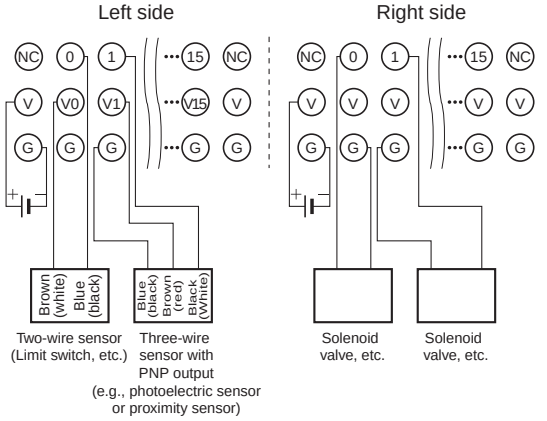

Environment-resistive Terminals with Transistors (High-function Type)

DRT2-□D08C(-1)/□D16C(-1)

Environment-resistive (IP67) I/O Terminals with Troubleshooting Functions such as Sensor Power Supply Short-circuit Detection

- Equipped with the standard Smart Slave functions that provide powerful preventative maintenance and troubleshooting capabilities.
- High degree of environmental resistance with dust-proof and drip-proof construction.
- Power supply wiring is not required for input devices.
- Connect heavy-load devices (up to 1.5 A).
- Power supply wiring is not required for input devices such as sensors. (Power supply wiring is required for output devices.)
- Detects ground faults or disconnects and notifies the Master.

Smart Slave Functions

- Contact operation counter
- Unit conduction time monitor
- Total ON time monitor
- Unit comments
- Connected device comments
- Network power supply voltage monitor
- I/O power supply monitor function (output only)
- Communications error log function (output only)
- Input filter (input only)
- Power-ON inrush current protection (input only)
- Sensor power supply short-circuit detection (input only)
- Disconnected sensor detection (input only)
- External load short-circuit detection (output only)
- Communications speed auto-detection
- No need to wire Unit power supply
- No need to wire input device power supply (input only)
- Last maintenance date

Ordering Information

Specifications			I/O connections	Rated internal circuit power supply voltage	Rated I/O power supply voltage	Model
Input	NPN (+ common)	8 points	Sensor I/O connector	Supplied from the communications connector	Supplied from the communications connector	**DRT2-ID08C**
	PNP (- common)					**DRT2-ID08C-1**
Output	NPN (- common)				24 VDC	**DRT2-OD08C**
	PNP (+ common)					**DRT2-OD08C-1**
Input	NPN (+ common)	16 points			Supplied from the communications connector	**DRT2-HD16C**
	PNP (- common)					**DRT2-HD16C-1**

General Specifications

Item / Model	DRT2-ID08C(-1)	DRT2-HD16C(-1)	DRT2-OD08C(-1)
Communications power supply voltage	11 to 25 VDC (Supplied from the communications connector)		
I/O power supply voltage	20.4 to 26.4 VDC (24 VDC -15%/+10%)		
Noise immunity	Conforms to IEC 61000-4-4 2 kV (power line)		
Communications power supply current consumption	115mA max. (24 VDC) 90mA max. (11 VDC)	200mA max. (24 VDC) 130mA max. (11 VDC)	35mA max. (24 VDC) 60mA max. (11 VDC)
Vibration resistance	10 to 60 Hz, 0.7-mm double amplitude, 60 to 150 Hz, 50 m/s² for 80 min each in the X, Y, and Z directions		
Shock resistance	150 m/s², 6 directions, 3 times each		
Dielectric strength	500 VAC between isolated circuits		
Insulation resistance	20 MΩ min. (between isolated circuits)		
Ambient operating temperature	-10°C to 55°C		
Ambient operating humidity	25% to 85% (with no condensation)		
Ambient operating atmosphere	No corrosive gases		
Ambient storage temperature	-20°C to 65°C		
Degree of protection	IP67		
Mounting method	M5 screw mounting (front and back)		
Mounting strength	100 N		
Connector strength	30 N		
Screw tightening torque	Round connectors (communications, supply voltage, and I/O): 0.39 to 0.49 N·m M5 (Unit mounting from front): 1.47 to 1.96 N·m		
Weight	340 g max.		390 g max.
I/O power supply connector	--		7/8-16UN
Communications connector	M12		

Input Specifications

● 8-point Inputs Terminals with Transistors

Item / Model	DRT2-ID08C	DRT2-ID08C-1
Internal I/O common	NPN	PNP
I/O points	8 inputs	
ON voltage	9 VDC min. (between input and V terminal)	9 VDC min. (between input and G terminal)
OFF voltage	5 VDC max. (between input and V terminal)	5 VDC max. (between input and G terminal)
OFF current	1.0 mA max.	
Input current	3.0 mA min./point (at 11 VDC) 11.0 mA max./point (at 24 VDC)	
Power supply voltage for sensor	Communications power supply voltage +0 V max. Communications power supply voltage -1.5 V min.	
ON delay time	1.5 ms max.	
OFF delay time	1.5 ms max.	
Number of circuits per common	8 per common	

● 16-point Inputs Terminals with Transistors

Item / Model	DRT2-HD16C	DRT2-HD16C-1
Internal I/O common	NPN	PNP
I/O points	16 inputs	
ON voltage	9 VDC min. (between input and V terminal)	9 VDC min. (between input and G terminal)
OFF voltage	5 VDC max. (between input and V terminal)	5 VDC max. (between input and G terminal)
OFF current	1.0 mA max.	
Input current	3.0 mA min./point (at 17 VDC) 11.0 mA max./point (at 24 VDC)	
Power supply voltage for sensor	Communications power supply voltage +0 V max. Communications power supply voltage -1.5 V min.	
ON delay time	1.5 ms max.	
OFF delay time	1.5 ms max.	
Number of circuits per common	16 per common	

Output Specifications

● 8-point Outputs Terminals with Transistors

Item / Model	DRT2-OD08C	DRT2-OD08C-1
Internal I/O common	NPN	PNP
I/O points	8 inputs	
Rated output current	1.5 A per point, 8.0 A per common	
Residual voltage	1.2 V max. (1.5 A DC between each output terminal and G)	1.2 V max. (1.5 A DC between each output terminal and V)
Leakage current	0.1 mA max.	
I/O power supply voltage	20.4 to 26.4 VDC (24 VDC -15%/+10%)	
ON delay time	0.5 ms max.	
OFF delay time	1.5 ms max.	
Number of circuits per common	8 per common	

Note: Refer to Peripheral Devices on page 169 for information on applicable connectors.

Dimensions

(Unit: mm)

● Environment-resistive Terminals (8 or 16 Inputs)

DRT2-ID08C
DRT2-ID08C-1
DRT2-HD16C
DRT2-HD16C-1

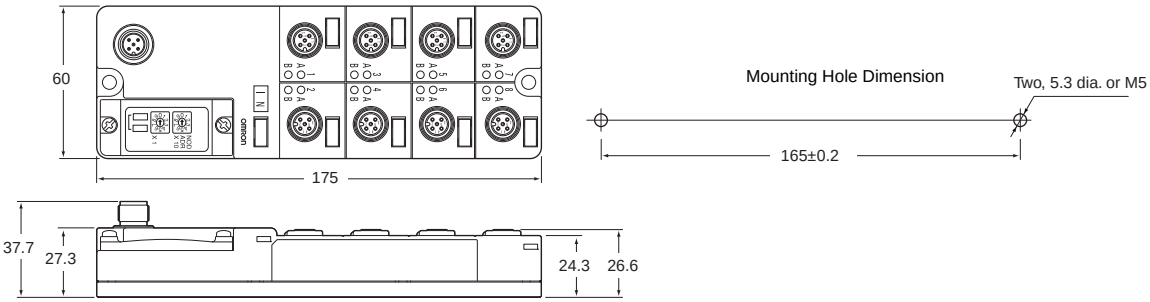

● Environment-resistive Terminals (8 Outputs)

DRT2-OD08C
DRT2-OD08C-1

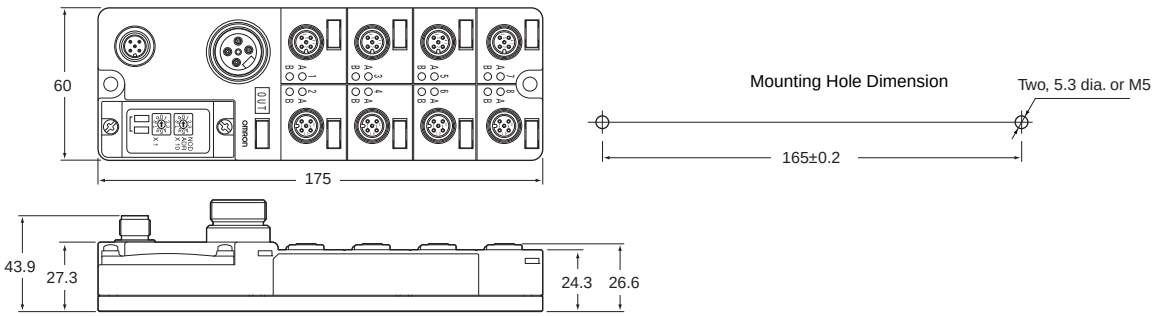

Wiring Diagrams

DRT2-ID08C (NPN)

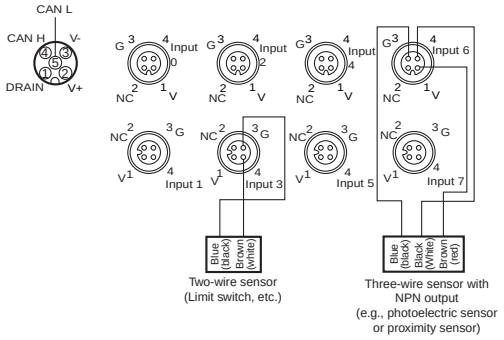

DRT2-ID08C-1 (PNP)

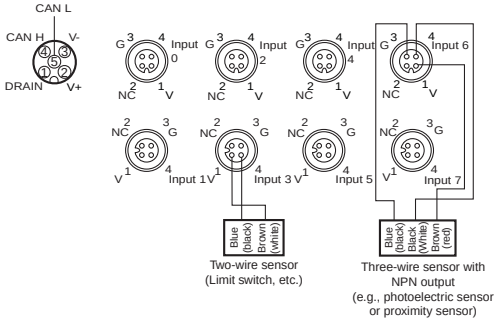

DRT2-OD08C (NPN)

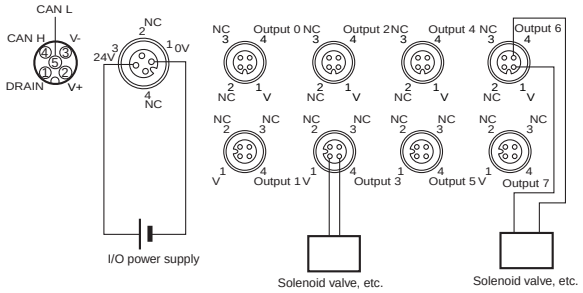

DRT2-OD08C-1 (PNP)

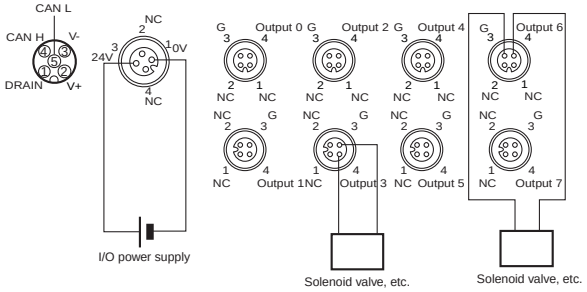

DRT2-HD16C (NPN)

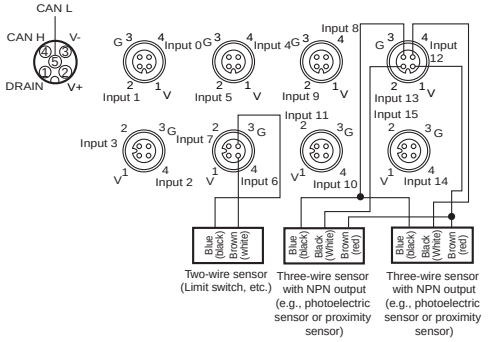

DRT2-HD16C-1 (PNP)

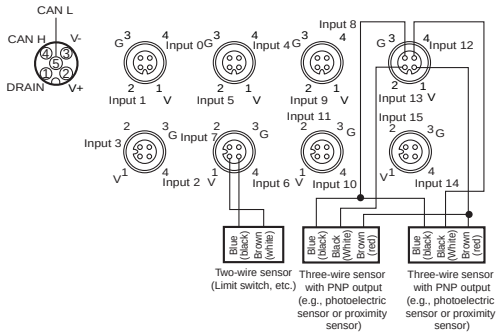

Environment-resistive Terminals with Transistors (Standard Type)

DRT2-□D04CL(-1)/□D08CL(-1)/□D16CL(-1)

Remote I/O Terminals with High Degree of Environmental Resistance (IP67) in Product Lineup Including Economical Input, Output, and Mixed I/O Models

- Common Smart Slave functionality provides strong support for equipment operation status monitoring and effective maintenance.
- High degree of environmental resistance with dust-proof and drip-proof construction. (IP67)
- Models with one connector for two outputs are available to make easier connection with hydraulic valve devices. (Models with 16 outputs and models with 16 mixed I/O)

Smart Slave Functions

- Operation time monitor (I/O only) ✻
- Contact operation counter
- Unit conduction time monitor
- Total ON time monitor
- Unit comments
- Connected device comments
- Network power supply voltage monitor
- I/O power supply monitor function
- Communications error log function
- Input filter (input or I/O only)
- Power-ON inrush current protection (input or I/O only)
- Communications speed auto-detection
- No need to wire Unit power supply
- Last maintenance date

✻ The operation time monitor can be used with the DRT2-□D04CL(-1).

Ordering Information

Specifications			I/O connections	Rated internal circuit power supply voltage	Rated I/O power supply voltage	Model
Inputs	NPN (+ common)	4 points	Sensor I/O connector	Supplied from the communications connector	24 VDC	**DRT2-ID04CL**
	PNP (- common)					**DRT2-ID04CL-1**
Outputs	NPN (- common)					**DRT2-OD04CL**
	PNP (+ common)					**DRT2-OD04CL-1**
Inputs	NPN (+ common)	8 points				**DRT2-ID08CL**
	PNP (- common)					**DRT2-ID08CL-1**
Outputs	NPN (- common)					**DRT2-OD08CL**
	PNP (+ common)					**DRT2-OD08CL-1**
Inputs	NPN (+ common)	16 points				**DRT2-HD16CL**
	PNP (- common)					**DRT2-HD16CL-1**
Outputs	NPN (- common)					**DRT2-WD16CL**
	PNP (+ common)					**DRT2-WD16CL-1**
I/O	NPN (input: + common, output: - common)	8 inputs/ 8 outputs				**DRT2-MD16CL**
	PNP (input: - common, output: + common)					**DRT2-MD16CL-1**

General Specifications

Item / Model	DRT2-ID04CL(-1)	DRT2-OD04CL(-1)	DRT2-ID08CL(-1)	DRT2-OD08CL(-1)	DRT2-HD16CL(-1)	DRT2-WD16CL(-1)	DRT2-MD16CL(-1)
Communications power supply voltage	11 to 25 VDC (Supplied from the communications connector)						
I/O power supply voltage	20.4 to 26.4 VDC (24 VDC -15%/+10%)						
Noise immunity	Conforms to IEC 61000-4-4 2 kV (power line)						
Communications power supply current consumption	35mA max. (24 VDC) 55mA max. (11 VDC)		35mA max. (24 VDC) 50mA max. (11 VDC)		40mA max. (24 VDC) 55mA max. (11 VDC)	35mA max. (24 VDC) 55mA max. (11 VDC)	40mA max. (24 VDC) 55mA max. (11 VDC)
Vibration resistance	10 to 60 Hz with double-amplitude of 0.7 mm, 60 to 150 Hz and 50 m/s² in X, Y, and Z directions for 80 min each						
Shock resistance	150m/s², 6 directions, 3 times each						
Dielectric strength	500 VAC between isolated circuits						
Insulation resistance	20 MΩ min. (between isolated circuits)						
Ambient operating temperature	-10°C to 55°C						
Ambient operating humidity	25% to 85% (with no condensation)						
Ambient operating atmosphere	No corrosive gases						
Ambient storage temperature	-20°C to 65°C						
Degree of protection	IP67						
Mounting method	M5 screw mounting (front and back)						
Mounting strength	100 N						
Connector strength	30 N						
Screw tightening torque	Round connectors (communications, supply voltage, and I/O): 0.39 to 0.49 N•m M5 (Unit mounting from front): 1.47 to 1.96 N•m						
Weight	275 g max.		390 g max.				
I/O power supply connector	7/8-16UN						
Communications connector	M12						

Input Specifications

● 4-input Models

Item / Model	DRT2-ID04CL	DRT2-ID04CL-1
Internal I/O common	NPN	PNP
I/O points	4 inputs	
ON voltage	15 VDC min. (between each input terminal and V)	15 VDC min. (between each input terminal and G)
OFF voltage	5 VDC max. (between each input terminal and V)	5 VDC max. (between each input terminal and G)
OFF current	1.0 mA max.	
Input current	6.0 mA max. per point at 24 VDC 3.0 mA max. per point at 17 VDC	
I/O power supply voltage	20.4 to 26.4 VDC (24 VDC -15%/+10%)	
ON delay time	1.5 ms max.	
OFF delay time	1.5 ms max.	
Number of circuits per common	4 per common	

● 16-input Models

Item / Model	DRT2-HD16CL	DRT2-HD16CL-1
Internal I/O common	NPN	PNP
I/O points	16 inputs	
ON voltage	15 VDC min. (between each input terminal and V)	15 VDC min. (between each input terminal and G)
OFF voltage	5 VDC max. (between each input terminal and V)	5 VDC max. (between each input terminal and G)
OFF current	1.0 mA max.	
Input current	6.0 mA max. per point at 24 VDC 3.0 mA max. per point at 17 VDC	
I/O power supply voltage	20.4 to 26.4 VDC (24 VDC -15%/+10%)	
ON delay time	1.5 ms max.	
OFF delay time	1.5 ms max.	
Number of circuits per common	16 per common	

● 8-input Models

Item / Model	DRT2-ID08CL	DRT2-ID08CL-1
Internal I/O common	NPN	PNP
I/O points	8 inputs	
ON voltage	15 VDC min. (between each input terminal and V)	15 VDC min. (between each input terminal and G)
OFF voltage	5 VDC max. (between each input terminal and V)	5 VDC max. (between each input terminal and G)
OFF current	1.0 mA max.	
Input current	6.0 mA max. per point at 24 VDC 3.0 mA max. per point at 17 VDC	
I/O power supply voltage	20.4 to 26.4 VDC (24 VDC -15%/+10%)	
ON delay time	1.5 ms max.	
OFF delay time	1.5 ms max.	
Number of circuits per common	8 per common	

● 8-input/8-output Models

Item / Model	DRT2-MD16CL	DRT2-MD16CL-1
Internal I/O common	NPN	PNP
I/O points	8 inputs	
ON voltage	15 VDC min. (between each input terminal and V)	15 VDC min. (between each input terminal and G)
OFF voltage	5 VDC max. (between each input terminal and V)	5 VDC max. (between each input terminal and G)
OFF current	1.0 mA max.	
Input current	6.0 mA max. per point at 24 VDC 3.0 mA max. per point at 17 VDC	
I/O power supply voltage	20.4 to 26.4 VDC (24 VDC -15%/+10%)	
ON delay time	1.5 ms max.	
OFF delay time	1.5 ms max.	
Number of circuits per common	8 per common	

Output Specifications

● 4-output Models

Item / Model	DRT2-OD04CL	DRT2-OD04CL-1
Internal I/O common	NPN	PNP
I/O points	4 outputs	
Rated output current	0.5 A per point, 2.0 A per common	
Residual voltage	1.2 V max. (0.5 A DC between each output terminal and G)	1.2 V max. (0.5 A DC between each output terminal and V)
Leakage current	0.1 mA max.	
I/O power supply voltage	20.4 to 26.4 VDC (24 VDC -15%/+10%)	
ON delay time	0.5 ms max.	
OFF delay time	1.5 ms max.	
Number of circuits per common	4 per common	

● 16-output Models

Item / Model	DRT2-WD16CL	DRT2-WD16CL-1
Internal I/O common	NPN	PNP
I/O points	16 outputs	
Rated output current	0.5 A per point, 4 A per common	
I/O power supply voltage	20.4 to 26.4 VDC (24 VDC -15%/+10%)	
Residual voltage	1.2 V max. (0.5 A DC between each output terminal and G)	1.2 V max. (0.5 A DC between each output terminal and V)
Leakage current	0.1 mA max.	
I/O power supply voltage	20.4 to 26.4 VDC (24 VDC -15%/+10%)	
ON delay time	0.5 ms max.	
OFF delay time	1.5 ms max.	
Number of circuits per common	16 per common	

● 8-output Models

Item / Model	DRT2-OD08CL	DRT2-OD08CL-1
Internal I/O common	NPN	PNP
I/O points	8 outputs	
Rated output current	0.5 A per point, 4 A per common	
I/O power supply voltage	20.4 to 26.4 VDC (24 VDC -15%/+10%)	
Residual voltage	1.2 V max. (0.5 A DC between each output terminal and G)	1.2 V max. (0.5 A DC between each output terminal and V)
Leakage current	0.1 mA max.	
I/O power supply voltage	20.4 to 26.4 VDC (24 VDC -15%/+10%)	
ON delay time	0.5 ms max.	
OFF delay time	1.5 ms max.	
Number of circuits per common	8 per common	

● 8-input/8-output Models

Item / Model	DRT2-MD16CL	DRT2-MD16CL-1
Internal I/O common	NPN	PNP
I/O points	8 outputs	
Rated output current	0.5 A per point, 4 A per common	
I/O power supply voltage	20.4 to 26.4 VDC (24 VDC -15%/+10%)	
Residual voltage	1.2 V max. (0.5 A DC between each output terminal and G)	1.2 V max. (0.5 A DC between each output terminal and V)
Leakage current	0.1 mA max.	
I/O power supply voltage	20.4 to 26.4 VDC (24 VDC -15%/+10%)	
ON delay time	0.5 ms max.	
OFF delay time	1.5 ms max.	
Number of circuits per common	8 per common	

Note: Refer to Peripheral Devices on page 169 for information on applicable connectors.

Dimensions

(Unit: mm)

DRT2-ID04CL(-1)
DRT2-OD04CL(-1)

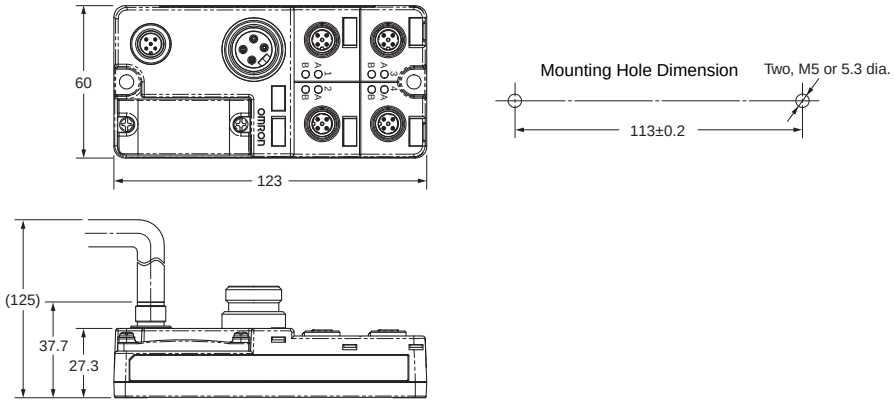

DRT2-ID08CL(-1)
DRT2-OD08CL(-1)
DRT2-HD16CL(-1)
DRT2-WD16CL(-1)
DRT2-MD16CL(-1)

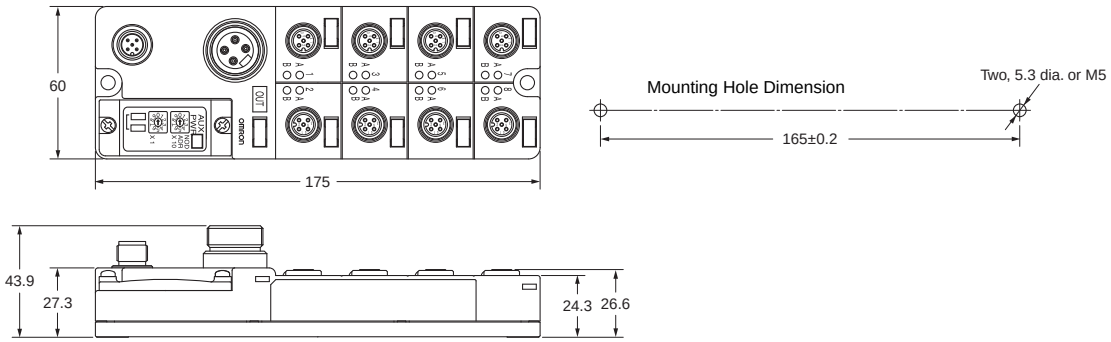

Wiring Diagrams

DRT2-ID04CL (NPN)

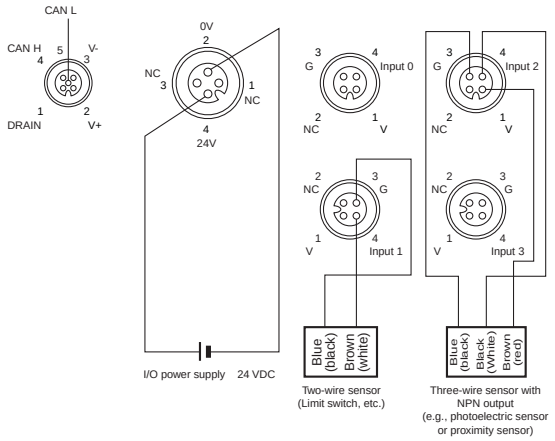

DRT2-ID04CL-1 (PNP)

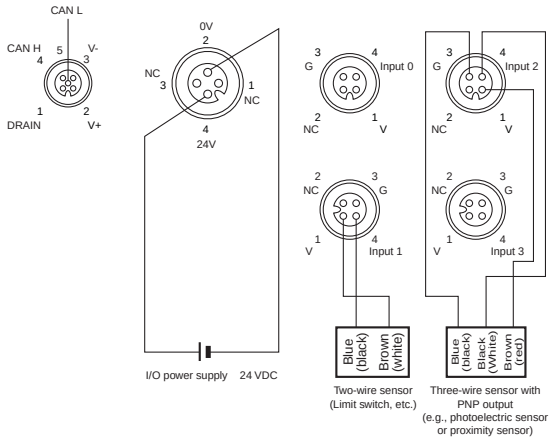

DRT2-OD04CL (NPN)

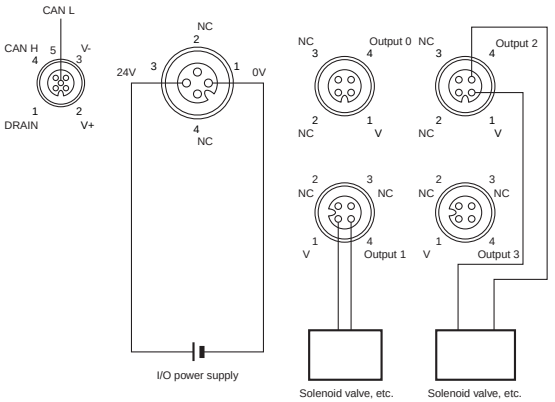

DRT2-OD04CL-1 (PNP)

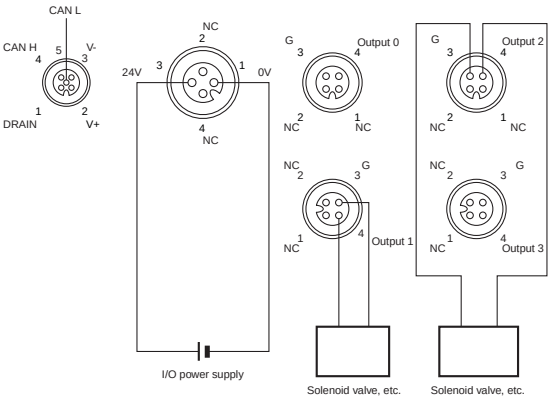

DRT2-ID08CL (NPN)

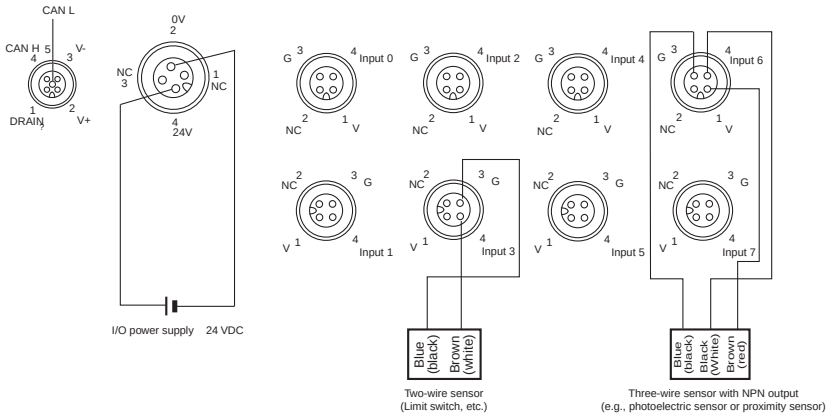

DRT2-ID08CL-1 (PNP)

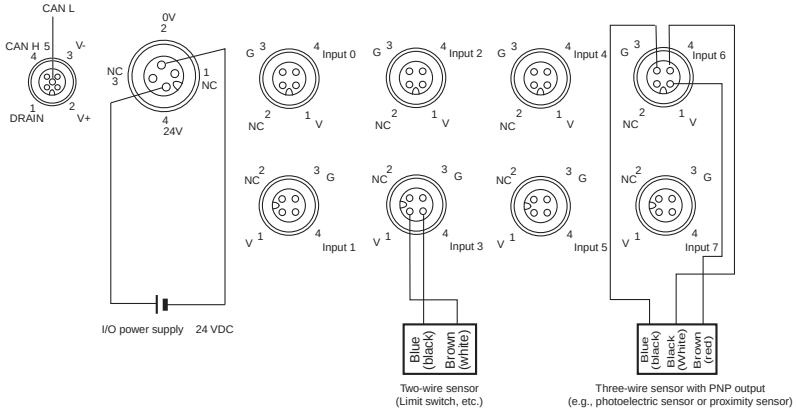

DRT2-OD08CL (NPN)

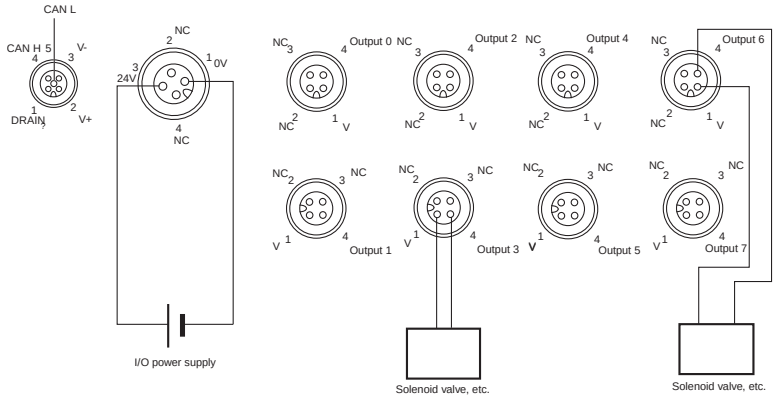

DRT2-OD08CL-1 (PNP)

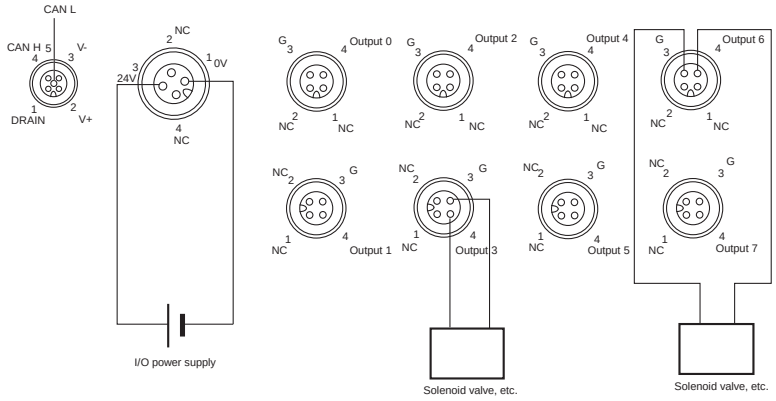

DRT2-HD16CL (NPN)

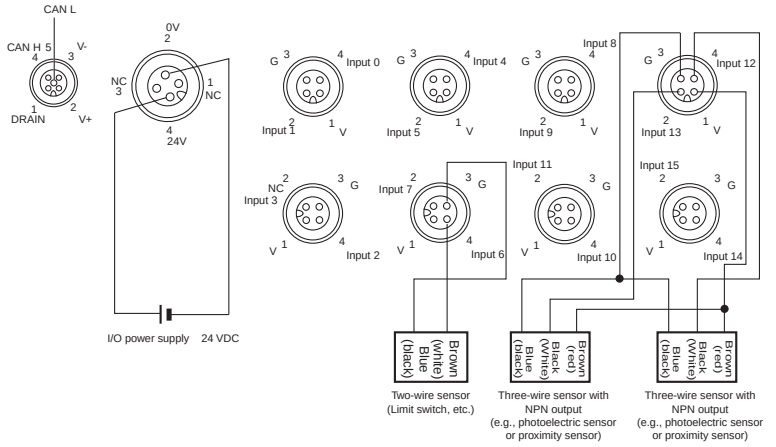

DRT2-HD16CL-1 (PNP)

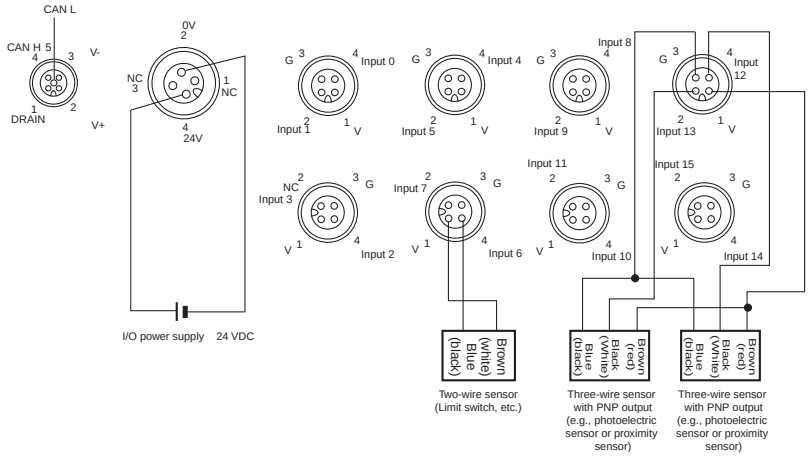

DRT2-WD16CL (NPN)

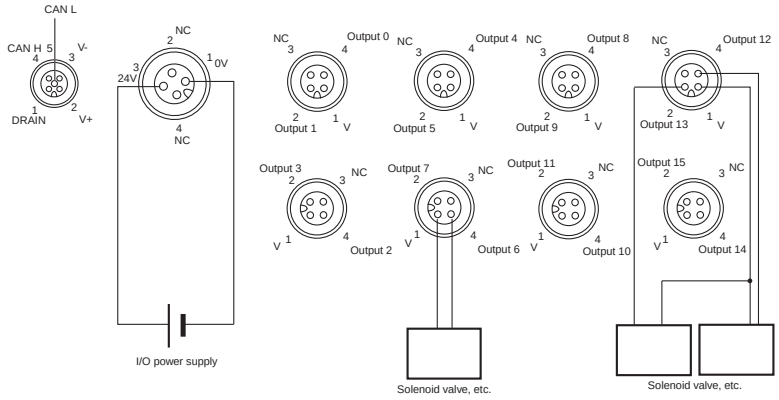

DRT2-WD16CL-1 (PNP)

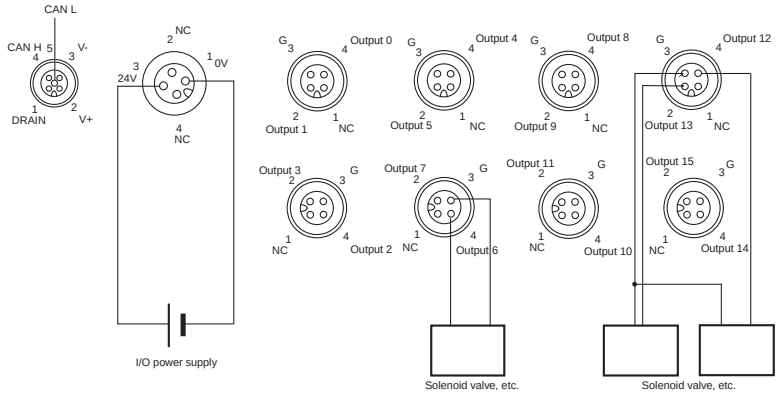

DRT2-MD16CL (NPN)

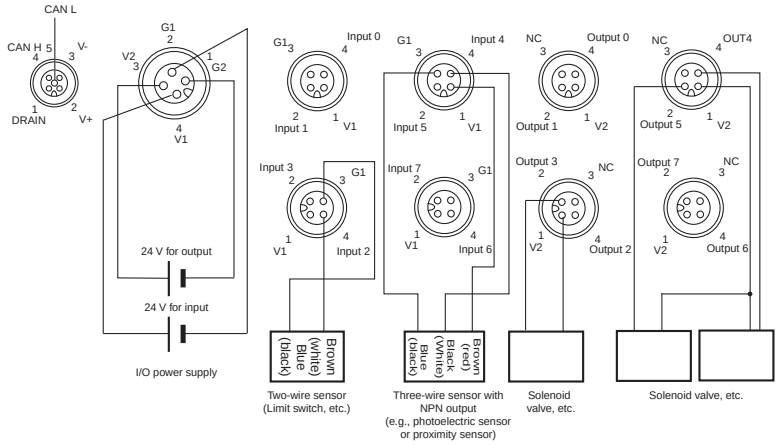

DRT2-MD16CL-1 (PNP)

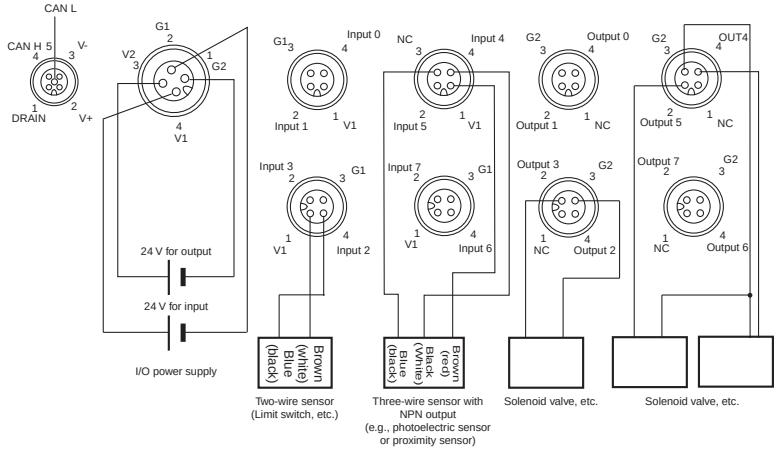

Analog I/O Terminals

DRT2-AD04(H)/DA02

Performs Calculations on Analog Values within the Slave Itself. Also Provides High Resolution at 1/30,000 (Full Scale) and Support for a Wide Variety of Data Sampling.

- Equipped with the standard Smart Slave functions that provide powerful preventative maintenance and troubleshooting capabilities.
- Sampling data can be analyzed internally to provide a low-cost scheduler function.
- Equipped with functions such as the scaling function, peak/bottom hold; top/valley hold; comparator function, cumulative counter, and derivative calculation function.
- Two I/O points can be allocated to any two of the following values: analog input, peak/bottom, top, valley, or rate-of-change. Values without an allocated I/O point can be read with message communications.

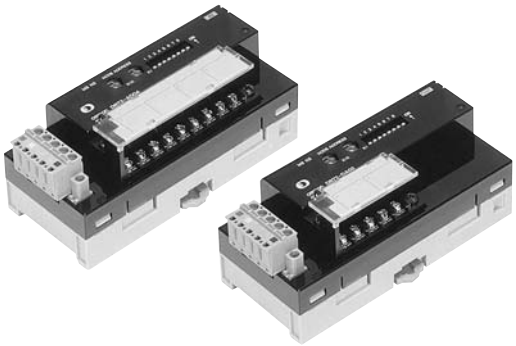

Smart Slave Functions

- Unit conduction time monitor
- Unit comments
- Connected device comments
- Network power supply voltage monitor
- Communications error log function
- Removable terminal block
- Automatic baud rate detection. No wiring required.
- No need to wire Unit power supply
- Scaling
- User calibration
- Last maintenance date
- Integration
- Moving averaging (inputs only)
- Peak/bottom hold
- Top/valley hold
- Rate of change calculation
- Comparator
- AD conversion points (conversion cycle) setting (inputs only)
- Error output value setting (outputs only)

Ordering Information

Classification	I/O points	Model
Analog input	4 inputs (Resolution: 6, 000)	**DRT2-AD04**
	4 inputs (Resolution: 30, 000)	**DRT2-AD04H**
Analog output	2 outputs	**DRT2-DA02**

General Specifications

Item / Model	DRT2-AD04	DRT2-AD04H	DRT2-DA02
Communications power supply voltage	11 to 25 VDC (Supplied from the communications connector)		
Current consumption	90 mA max. (24 VDC) 150 mA max. (11V DC)	70 mA max. (24 VDC) 110 mA max. (11 VDC)	120 mA max. (24 VDC) 220 mA max. (11 VDC)
Noise immunity	Conforms to IEC61000-4-4, 2 kV (power line)		
Vibration resistance	10 to 150 Hz, 0.7-mm double amplitude		
Shock resistance	150 m/s^2		
Dielectric strength	500 VAC for 1 min between the communications circuit and analog circuit (1 mA sensing current)		
Ambient operating temperature	-10°C to 55°C (with no icing or condensation)		
Ambient operating humidity	25% to 85%		
Ambient operating atmosphere	No corrosive gases		
Ambient storage temperature	-20°C to 65°C		
Mounting method	DIN 35 mm-track mounting		
Mounting strength	50 N 10 N (in the DIN Track direction)		
Screw tightening torque	M3 (power, I/O terminal): 0.5 N·m		
Weight	170 g max.	160 g max.	150 g max.

Input Specifications

Item / Model	Specifications	DRT2-AD04 Voltage input	DRT2-AD04 Current input	DRT2-AD04H Voltage input	DRT2-AD04H Current input
Input points		4 points (inputs 0 to 3)			
Input type		0 to 5 V 1 to 5 V 0 to 10 V -10 to +10 V	0 to 20 mA 4 to 20 mA	0 to 5 V 1 to 5 V 0 to 10 V	0 to 20 mA 4 to 20 mA
Input range setting method		• Set using DIP switches: Shared by inputs 0 and 1, shared by inputs 2 and 3 • Set using the Configurator: Possible to set inputs 0 to 3 independently			
Maximum signal input		±15 V	±30 mA	±15 V	±30 mA
Input impedance		1 MΩ min.	Approx. 250 Ω	1 MΩ min.	Approx. 250 Ω
Resolution		1/6,000 (FS)		1/30,000 FS (full scale)	
Overall accuracy	**25°C**	±0.3% FS	±0.4% FS	±0.3% FS	±0.4% FS
	-10°C to 55°C	±0.6% FS	±0.8% FS	±0.6% FS	±0.8% FS
Conversion time		4 ms max. for 4 inputs **Note:** When calculation functions are not used and the DeviceNet communications cycle is 4 ms.		250 ms max. for 4 inputs	
Converted data		Input ranges other than -10 to 10 V: Full scale is 0000 to 1770 hexadecimal (0 to 6,000) -10 to 10 V input range: Full scale is F448 to 0BB8 hexadecimal (-3,000 to 3,000) A/D conversion range: ±5% FS		Full scale is 0000 to 7530 hexadecimal A/D conversion range: ±5% FS	
Insulation method		Photocoupler isolation between inputs and communications lines (There is no isolation between input signals)		Photocoupler isolation (between inputs and communications lines and between temperature input signals)	
I/O connections		Terminal block			
Accessories		Four shorting bars for use with current inputs.			

Output Specifications

Item / Model	Specifications	DRT2-DA02 Voltage output	DRT2-DA02 Current output
Output points		2 points (output 0 and1)	
Output type		0 to 5 V 1 to 5 V 0 to 10 V -10 to 10 V	0 to 20 mA 4 to 20 mA
Input range setting method		• Set using DIP switches: Independent for outputs 0 and 1 • Set using the Configurator: Independent for outputs 0 and 1	
Allowable output load resistance		1 KΩ min.	600 Ω max.
Resolution		1/6,000 (FS)	
Overall accuracy	**25°C**	±0.4% full scale	
	-10°C to 55°C	±0.8% full scale	
Conversion time		2 ms/2 points	
Converted data		Output ranges other than -10 to 10 V: Full scale is 0000 to 1770 hexadecimal (0 to 6,000) -10 to 10 V output range: Full scale is F448 to 0BB8 hexadecimal (-3,000 to 3,000) D/A conversion range: ±5% FS	
Insulation method		Photocoupler isolation between outputs and communications lines (There is no isolation between output signals)	
I/O connections		Terminal block	
Accessories		None	

Dimensions

(Unit: mm)

DRT2-AD04
DRT2-AD04H

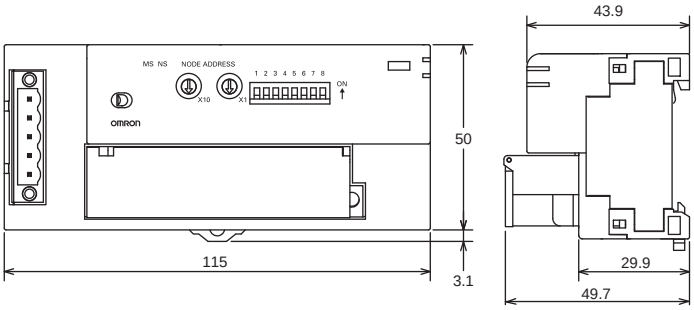

DRT2-DA02

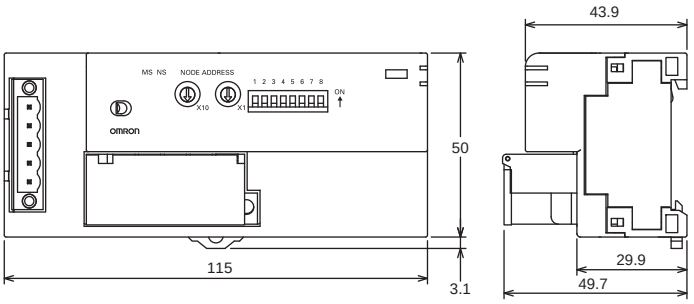

Wiring Diagrams

DRT2-AD04

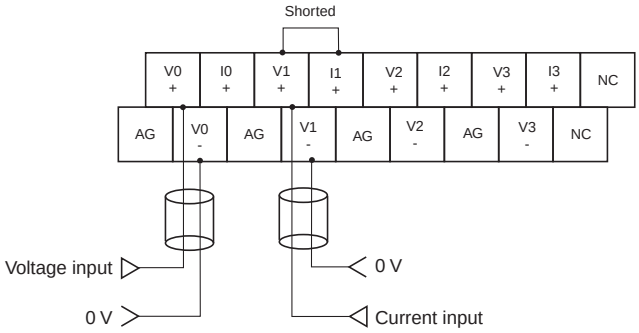

Note: With using a current input, always short the V+ and I+ terminals. (Use the shorting bar provided with the Unit.)

DRT2-AD04H

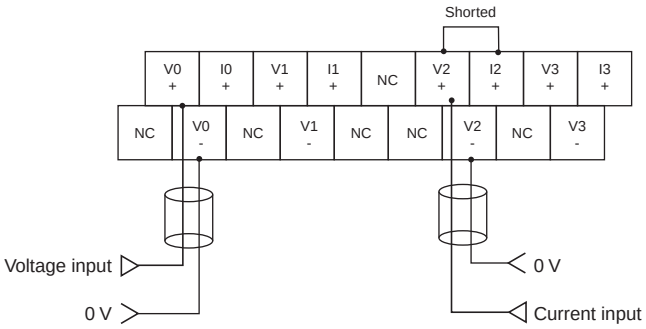

Note: With using a current input, always short the V+ and I+ terminals. (Use the shorting bar provided with the Unit.)

DRT2-DA02

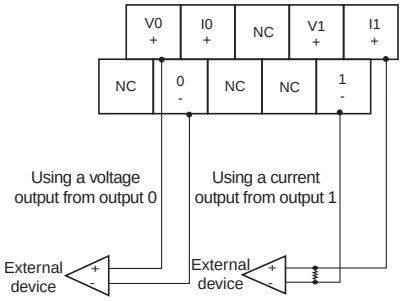

Note: The voltage and current output ranges (signals) are set with either the DIP switch or the Configurator settings.

Temperature Input Terminals

DRT2-TS04□

Temperature Input Terminal with Smart Functionality

- The Temperature Input Terminal can be used with almost the same functionality as a Analog Input Terminal, such as with scaling and comparator functions.
- Enhanced performance is provided with functionality specific to the Temperature Input Terminal, such as the recording the operating time in a preset temperature range and temperature difference detection between input channels.

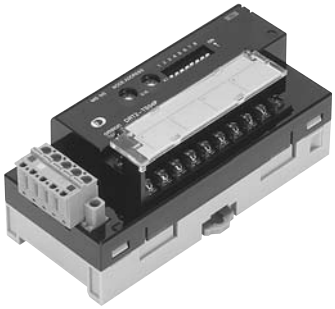

Smart Slave Functions

Unit conduction time monitor	Unit comments	Connected device comments	Network power supply voltage monitor
Communications error log function	Removable terminal block	Communications speed auto-detection	No need to wire Unit power supply
Scaling	User calibration	Last maintenance date	Integration
Moving averaging	Peak/bottom hold	Top/valley hold	Rate of change calculation
Comparator	Top/valley count	Operating time in preset temperature range	Temperature difference detection between input channels

Ordering Information

Input type	I/O points	Model
Thermocouple input	4 inputs allocated 4 input words at the Master Unit (8 input words allocated when 1/100 display mode is selected).	**DRT2-TS04T**
Platinum-resistance thermometer input		**DRT2-TS04P**

General Specifications

Item / Model	DRT2-TS04T	DRT2-TS04P
Input type	Thermocouple input	Platinum-resistance thermometer input
I/O points	4 inputs allocated 4 input words at the Master Unit (8 input words allocated when 1/100 display mode is selected)	
Communications power supply voltage	11 to 25 VDC (Supplied from the communications connector)	
Current consumption	70 mA max. (24 VDC), 110 mA max. (11 VDC)	
Noise immunity	Conforms to IEC61000-4-4, 2.0 kV	
Vibration resistance	10 to 150 Hz, 0.7-mm single amplitude	
Shock resistance	150 m/s²	
Dielectric strength	500 VAC (between isolated circuits)	
Insulation resistance	20 MΩ min. (initial value) at 100 VDC	
Ambient operating temperature	-10°C to 55°C (with no icing or condensation)	
Ambient operating humidity	25% to 85%	
Ambient operating atmosphere	No corrosive gases	
Ambient storage temperature	-25°C to 65°C	
Mounting method	DIN 35 mm-track mounting	
Mounting strength	50 N 10 N (in the DIN Track direction)	
Screw tightening torque	M3: 0.5 N·m	
Terminal strength	No damage when 50 N pull load was applied.	
Weight	160 g max.	

Performance Specifications

Item / Model	DRT2-TS04T	DRT2-TS04P ✻1
Input types	Switchable between R, S, K1, K2, J1, J2, T, B, L1, L2, E, U, N, W, and PLII When set with Configurator: Input types can be set individually for each input. When set with DIP switch: The same input type setting applies to all 4 inputs.	Switchable between PT, JPT, PT2, and JPT2 When set with Configurator: Input types can be set individually for each input. When set with DIP switch: The same input type setting applies to all 4 inputs.
Indicator accuracy	(±0.3% of indication value or ±1°C, whichever is larger) ±1 digit max. ✻2	-200 to 850°C input range: (±0.3% of indication value or ±0.8°C, whichever is larger) ±1 digit max. -200 to 200°C input range: (±0.3% of indication value or ±0.5°C, whichever is larger) ±1 digit max.
Conversion cycle	250 ms/4 points	
Temperature conversion data	Binary data (4-digit hexadecimal when normal display mode is selected or 8-digit hexadecimal when 1/100 display mode is selected.)	
Insulation method	Between input and communication lines: Photocoupler insulation Between temperature input signals: Photocoupler insulation	

Input type	Input accuracy
K1, K2, T, and N below -100°C	±2°C ±1 digit max.
U, L1, and L2	±2°C ±1 digit max.
R and S below 200°C	±3°C ±1 digit max.
B below 400°C	Not specified.
W	±0.3% of indication value or ±3°C (whichever is larger) ±1 digit max.
PLII	±0.3% of indication value or ±2°C (whichever is larger) ±1 digit max.

✻1. A current of 0.35 mA flows to sensors connected to the DRT2-TS04P.
✻2. The indicator accuracy specifications differ depending on the mounting direction. Refer to the above table for details.

● Indicator accuracy when only the Unit or the Terminal Block is replaced

In the DRT2-TS04T, a cold junction compensator is included in the Terminal Block. The indicator accuracy will be reduced depending on the mounting direction if only the Terminal Unit is replaced and the Lot No. and serial No. of the Terminal Block and Terminal Unit do not match. The Lot No. and serial No. of the Terminal Block and Terminal Unit can be found on the labels affixed to the products as shown below.

Terminal Unit Label

Remove the terminal block. The label is affixed to the top of the unit.

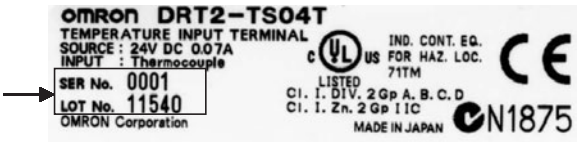

Terminal Block Label

The label is affixed to the left side of the terminal block.

SER No.
0001
LOT No.
11540

If the Lot No. and serial No. of the terminal block and Unit are the same, basic performance specifications apply regardless of the mounting direction. If the numbers are different, the following indication accuracies apply.

Mounting direction	Indication accuracies
Mounted normally (1)	As specified in the Performance Specifications.
Mounted in any other direction other than (1)	(±0.3% of indication value or ±2°C, whichever is greater) ±1 digit max.

Input type	Indication accuracies
K1, K2, T, and N below -100°C	±3°C ±1 digit max.
U, L1, and L2	±3°C ±1 digit max.
R and S below 200°C	±4°C ±1 digit max.
B below 400°C	Not specified.
W	±0.3% of indication value or ±4°C (whichever is larger) ±1 digit max.
PLII	±0.3% of indication value or ±3°C (whichever is larger) ±1 digit max.

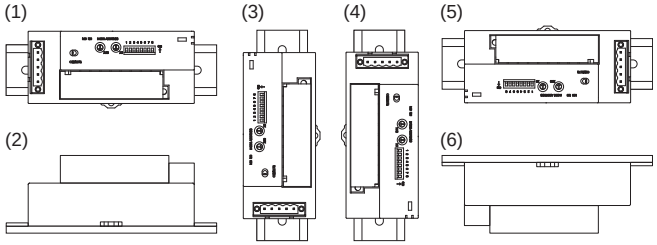

Dimensions

(Unit: mm)

DRT2-TS04T
DRT2-TS04P

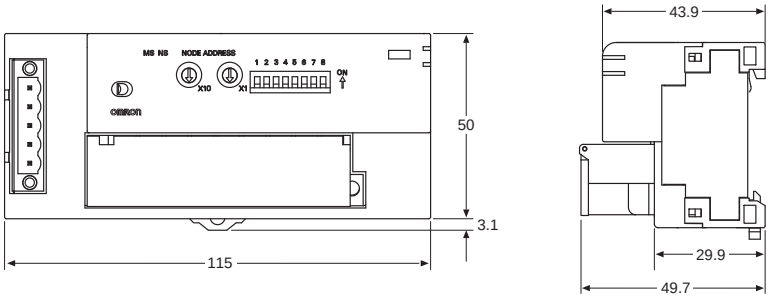

Terminal Arrangement

DRT2-TS04T

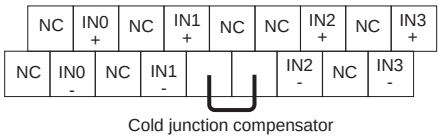

Do not touch or remove the cold junction compensator.
Otherwise temperature data will not display properly.

DRT2-TS04P

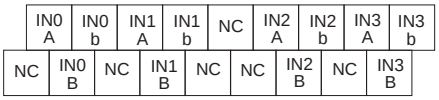

Wiring Diagrams

DRT2-TS04T (Thermocouple input)

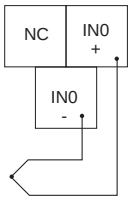

DRT2-TS04P (Platinum resistance thermometer input)

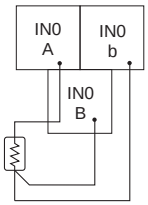

SmartSlice GRT1 Series

SmartSlice GRT1 Series 64
■ What Is the SmartSlice GRT1 Series
■ System Configuration
■ Internal Circuit Configuration
DeviceNet Communications Unit 68
GRT1-DRT
SmartSlice I/O Units 70

SmartSlice GRT1 Series

DeviceNet-compliant Building-block I/O Terminals to Save Space, Cut Costs, and Reduce Work.

What Is the SmartSlice GRT1 Series?

This SmartSlice GRT1 Series consists of building-block I/O Terminals that enable building flexible systems to match the customer's applications with features such as I/O expansion using small numbers of points.

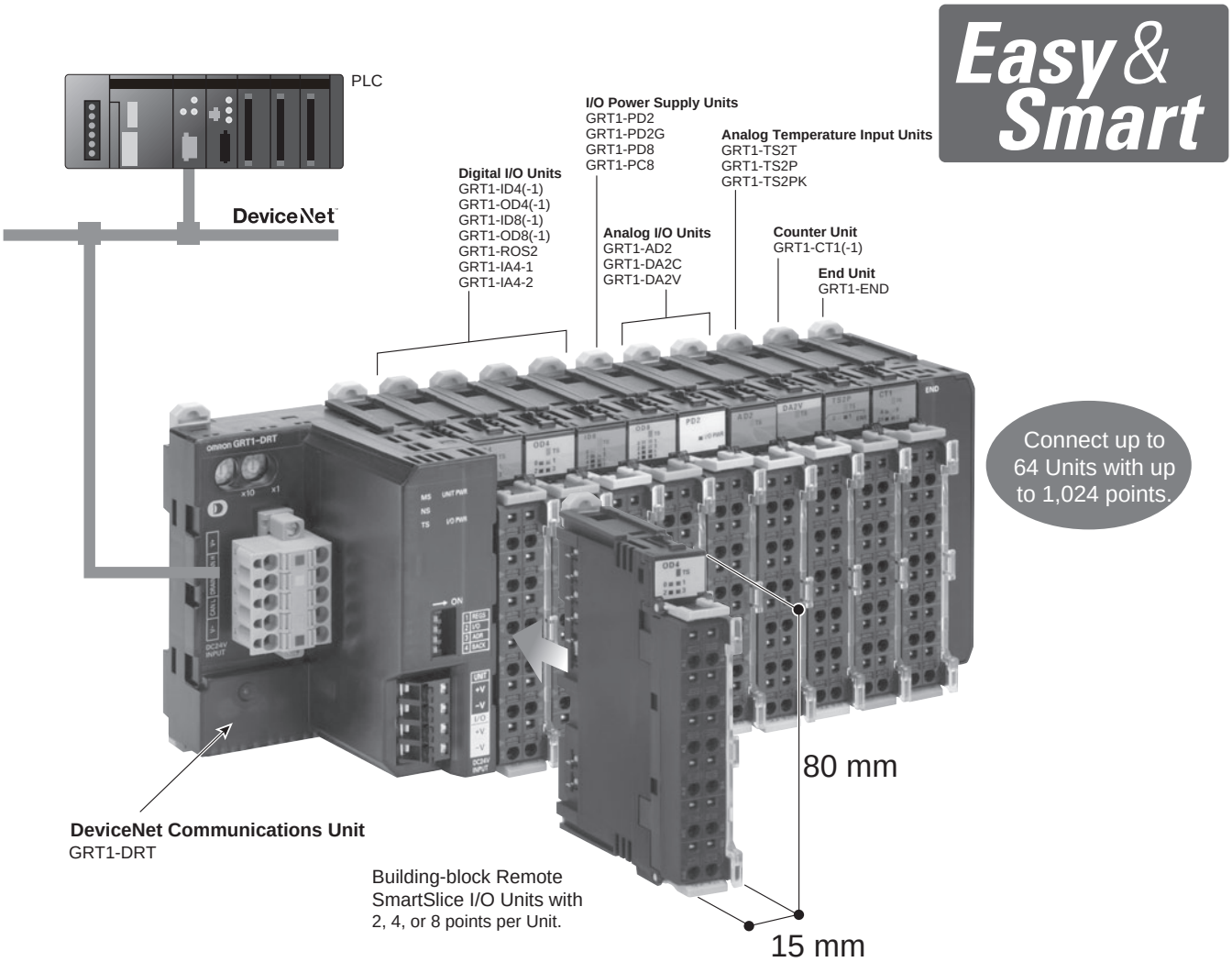

Easily save space and reduce costs.

Required number of points		Number of redundant points	
		Previous slaves	SmartSlice
Inputs	20	12	0
Outputs	10	6	2
Analog inputs	2	2	0
Number of nodes		**4**	**1**

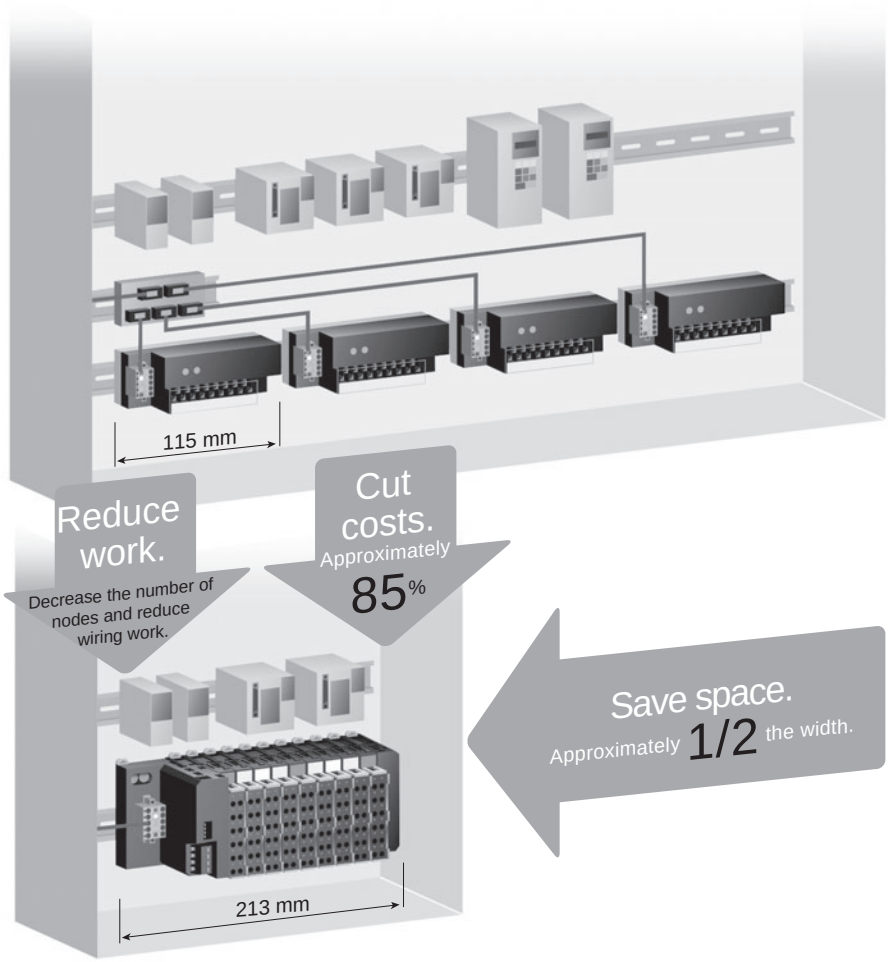

One-touch Wiring

The terminal block with screwless clamp terminals greatly reduces work. Also, additional tightening is not required because vibration does not cause loosening.

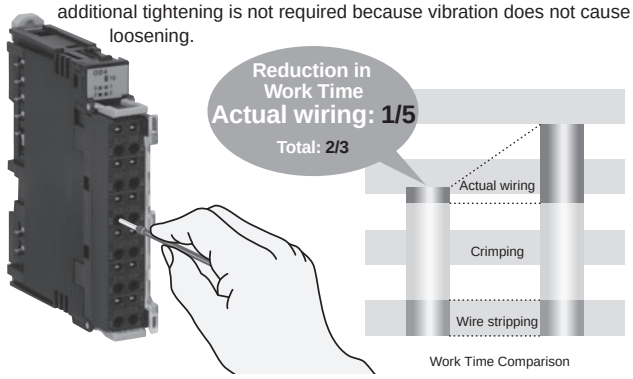

Work Time Comparison

Also Save Space in the Control Panel

V and G terminals are provided for each input signal. Relay terminals are no longer required, which helps save space in the control panel.

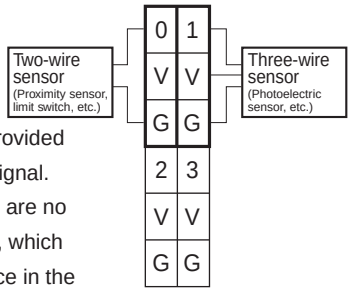

Terminal Arrangement

Set Only the Node Addresses

Automatic baud rate detection and automatic I/O allocations enable immediate use with no Support Software.

Online replacement makes maintenance easy

The terminal block, main block, and power supply block of the I/O Unit are detachable.
Replacement can be performed online without changing the I/O wiring and while maintaining communications for the remaining Units.
This is ideal for applications such as furnaces, where heaters must be remain turned ON as much as possible.

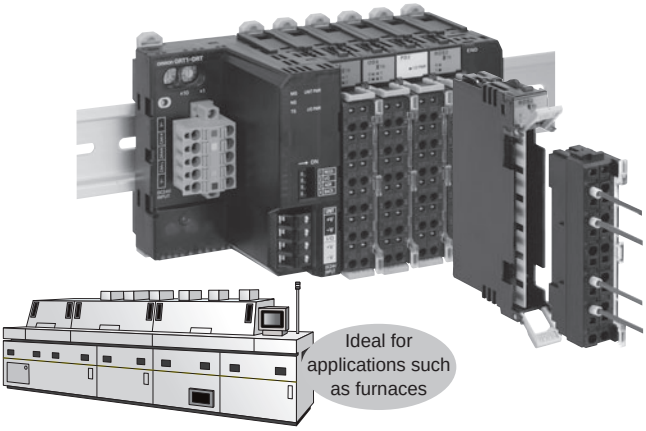

Equipped with Smart Functions

The highly acclaimed Smart Functions of the DRT2 Series are used.
This helps monitor the operation status of the equipment and improves capacity utilization.

Smart Timing

The Slave Unit stores the equipment operating time and amount of change in operation as data to enable monitoring without increasing the load between Controllers.

Smart Counting

The number of ON/OFF operations of the equipment and the total operating time are counted by the Slave Unit to provide notification when maintenance is required.

Recover Unit Parameters without Support Software

Unit data can be backed up by manipulating a DIP switch.
Automatically restoring data after Unit replacement improves maintenance efficiency.

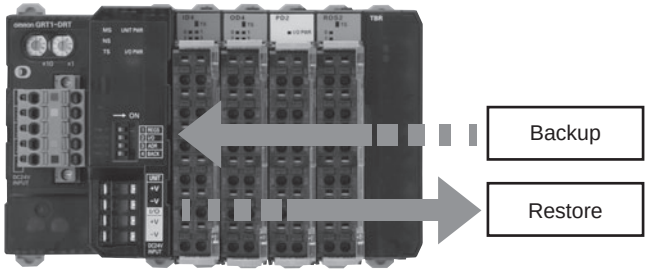

I/O Allocation Software Settings

New Function

- This function enables registering the I/O configuration data of a non-mounted SmartSlice I/O Unit as a dummy.
- Securing the required capacity for expansion in the I/O map in advance when I/O Units must be added in the future prevents discrepancies in the I/O map when actual expansion is performed and eliminates the need for significant changes in programming.

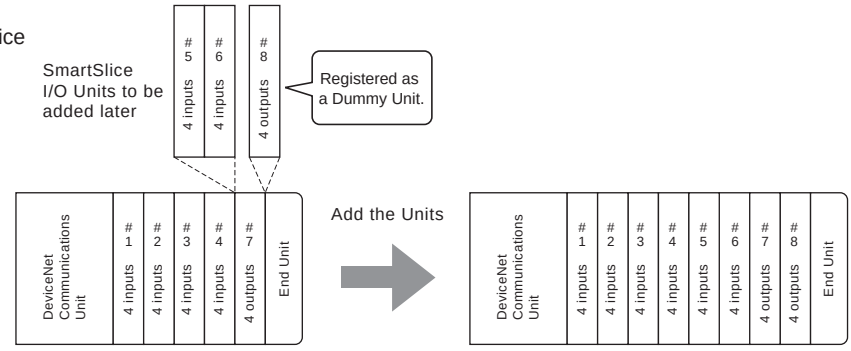

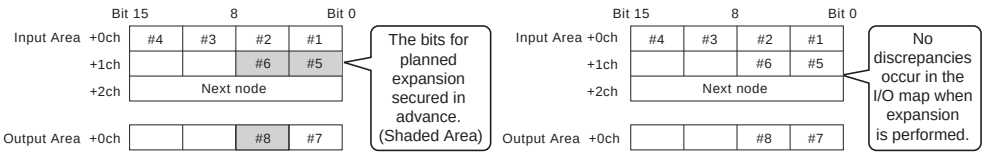

Support for flexible I/O configurations to match the application help downsize the control panel, cut costs, and decrease wiring work.

System Configuration

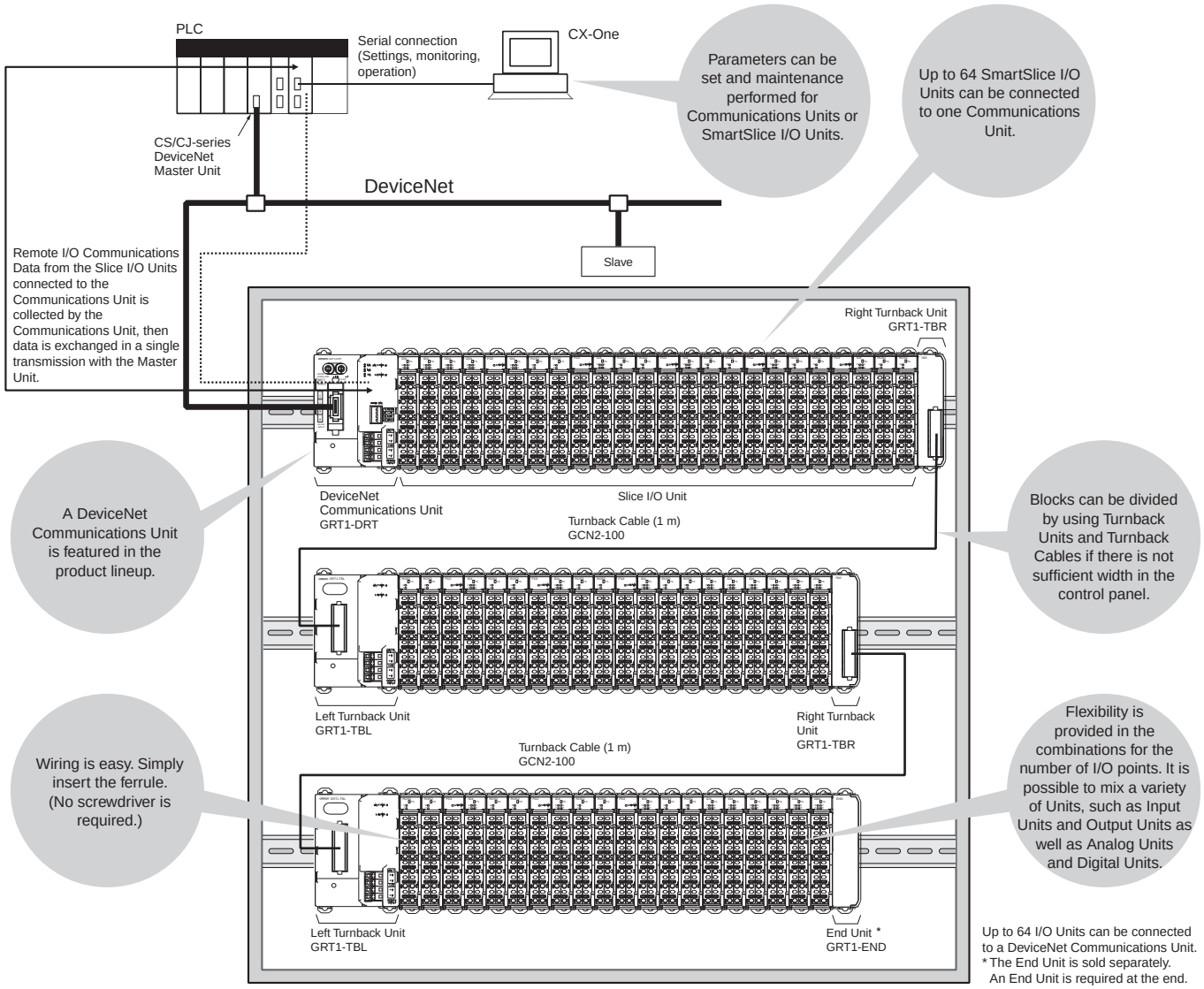

Internal Circuit Configuration

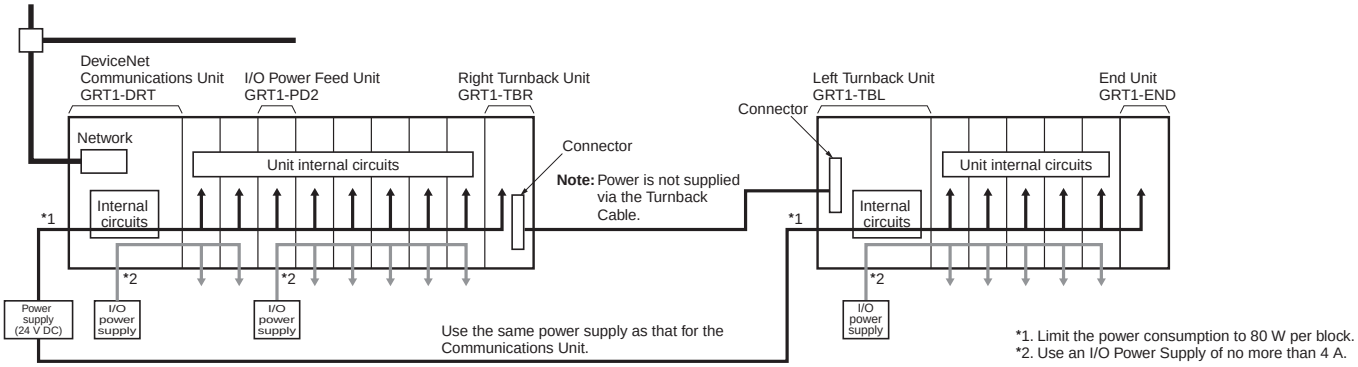

DeviceNet Communications Unit

GRT1-DRT

DeviceNet-compliant Interface Unit with up to 1,024 I/O Points at One Node

- Connect up to 64 SmartSlice I/O Units.
- Consolidate a large capacity of I/O points into one Slave (up to 1,024 I/O points).
- Save space by configuring different I/O types using one Slave Unit.
- Easily get the system started simply by setting the node addresses.
- Replace SmartSlice I/O Units online while maintaining communications. This helps minimize equipment downtime.
- Smart functions for monitoring equipment operating status. This helps improve preventive maintenance and the utilization rate.
- Registering SmartSlice I/O for planned future expansion decreases design work when changes are made. (Supported for unit version 2.0 or higher.)

Ordering Information

Name	Specifications	Model
DeviceNet Communications Unit	Up to 64 Slice I/O Units can be connected. (1,024 I/O points max.)	**GRT1-DRT**

General Specifications

Item / Model	GRT1-DRT
Network power supply voltage	11 to 25 V DC (Supplied from the communications connector)
Unit power supply voltage	20.4 to 26.4 VDC (24 VDC -15%/+10%)
I/O power supply voltage	20.4 to 26.4 VDC ✻ (24 V +10%/-15%)
Noise immunity	Conforms to IEC 61000-4-4, 2 kV (power line)
Vibration resistance	10 to 60 Hz, 0.7-mm double amplitude 60 to 150 Hz: 50 m/s^2
Shock resistance	150 m/s^2
Dielectric strength	500 V AC between isolated circuits
Insulation resistance	20 MΩ min. between isolated circuits
Ambient operating temperature	-10°C to 55°C (with no icing or condensation)
Ambient operating humidity	25% to 85%
Ambient operating atmosphere	No corrosive gases
Ambient storage temperature	-25°C to 65°C (with no icing or condensation)
Mounting method	DIN 35 mm-track mounting

✻ For power supply input to the Slice I/O Units.

DeviceNet Communications Unit Specifications

Item / Model	GRT1-DRT
I/O points	1,024 max. (128 bytes), including inputs and outputs
Connectable Slice I/O Units	64 max.
Communications with Slice I/O Units	64 Units max. in a horizontal connection configuration (for an extension of approx. 2 m max.) Power consumption is limited to 80 W per block, and the extension must be done using Turnback Cables (two 1-m cables max., for a distance of 2 m max.)
Slice I/O Unit data capacity	(1) 0, 2, or 4 bits (2) 0 to 16 words (in word increments)
Status flags	One word is allocated (Communications Unit Status Flags)
Parameter back-up and restore functions	2 KB of data can be backed up and restored per Unit
Message communications function	Supported
Automatic baud rate detection	Supported
Connector	1 DeviceNet open connector with screws Connectable with multi-drop connector
Terminals	2 terminals for I/O power supply, 2 terminals for Unit power supply
Power supply per 1 block	80 W max. (Unit power supply)
I/O power supply consumption current	4 A max.
Weight	137 g

Nomenclature and Functions

GRT1-DRT

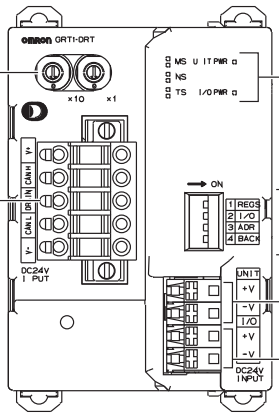

Rotary Switches
Used to set the node address for the DeviceNet Slave. (Set in decimal.)
Node addresses from 0 to 63 can be set.

DeviceNet Communications Connector
Connects to the communications cable for a DeviceNet network.

Indicators
Indicate the condition of the DeviceNet Communications Unit and DeviceNet network, and the communications condition with the Slice I/O Units.

DIP Switch
Used to set the I/O allocation method, and to read and write configuration data from and to Slice I/O Units connected to the Communications Unit.
SW1 (REGS): Create/Enable registered table
SW2 (I/O): Enable/Disable I/O allocation mode ✻
SW3 (ADR): Automatic restore
SW4 (BACK): Backup trigger
✻ Unit version 2.0 or later.

Unit Power Supply Terminals
Supply power to the internal circuits of the Unit, and to the internal circuits of connected Slice I/O Units.

I/O Power Supply Terminals
Supply power to external inputs and outputs connected to the Slice I/O Units.

Dimensions

(Unit: mm)

GRT1-DRT

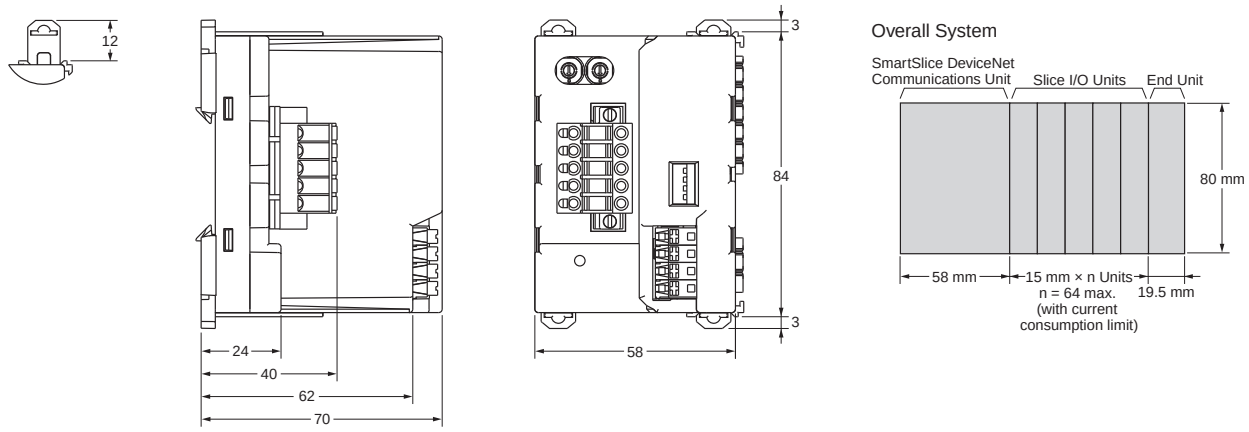

Ordering Information

Name		Appearance	Specifications	Model
DeviceNet Communications Unit			Up to 64 SmartSlice I/O Units can be connected (1,024 I/O points).	**GRT1-DRT**
SmartSlice I/O Units	Digital I/O Units		4 inputs, NPN	**GRT1-ID4**
			4 inputs, PNP	**GRT1-ID4-1**
			4 outputs, NPN	**GRT1-OD4**
			4 outputs, PNP	**GRT1-OD4-1**
			8 inputs, NPN	**GRT1-ID8**
			8 inputs, PNP	**GRT1-ID8-1**
			8 outputs, NPN	**GRT1-OD8**
			8 outputs, PNP	**GRT1-OD8-1**
			2 relay outputs	**GRT1-ROS2**
			4 AC inputs	**GRT1-IA4-1**
				GRT1-IA4-2
	Analog I/O Units		2 inputs (current or voltage)	**GRT1-AD2**
			2 outputs (current)	**GRT1-DA2C**
			2 outputs (voltage)	**GRT1-DA2V**
	Temperature Input Unit (resistance thermometer)		2 temperature inputs (Pt100 resistance thermometer)	**GRT1-TS2P**
			2 temperature inputs (Pt1000 resistance thermometer)	**GRT1-TS2PK**
			2 thermocouple inputs	**GRT1-TS2T**
	Counter Units		1 counter input, 1 external output, NPN	**GRT1-CT1**
			1 counter input, 1 external output, PNP	**GRT1-CT1-1**
System Units	Turnback Units		For right-side turnback (Used to divide a SmartSlice I/O Terminal into blocks)	**GRT1-TBR**
			For left-side turnback (Used to divide a SmartSlice I/O Terminal into blocks)	**GRT1-TBL**
	Turnback Cable	--	Length: 1 m	**GCN2-100**
	I/O Power Feed Unit		Used if the total current consumption of the I/O Power Supply exceeds 4 A or to use a separate I/O power supply.	**GRT1-PD2**
				GRT1-PD2G
				GRT1-PD8
				GRT1-PD8-1
			Used to add V and G terminals for the I/O power supply.	**GRT1-PC8**
				GRT1-PC8-1
	End Unit ✻1		Required at the end of SmartSlice I/O Terminals.	**GRT1-END**
Option	Terminal blocks	--	Terminal blocks (5 blocks)	**GRT1-BT1-5**

✻1. The End Unit is sold separately. (End Units are not included with Communications Units.)
✻2. Use the GCN2-100 as a set with the GRT1-TBR and GRT1-TBL.

MULTIPLE I/O TERMINAL Series

MULTIPLE I/O TERMINAL Series 72
■ MULTIPLE I/O TERMINAL Configuration Example
Communications Unit..... 73
DRT1-COM
Digital I/O Units..... 74
GT1-□D16(-1)/□D16MX(-1)/□D16ML(-1)/□D32ML(-1)/□D16DS(-1)
Relay Output Units..... 81
GT1-ROS16/ROP08/FOP08
Analog I/O Units..... 83
GT1-AD/DA
Temperature Input Units..... 85
GT1-TS04□

MULTIPLE I/O TERMINAL Series

A MULTIPLE I/O TERMINAL with a flexible combination of numerous versatile I/O Units handles digital I/O, analog I/O, counter inputs, or relay outputs and boosts on-site productivity higher than ever. Using a MULTIPLE I/O TERMINAL, one Slave (Communications Unit) can connect to a maximum of eight I/O Units to achieve control of a maximum of 1,024 I/O points. (see Note below.)

MULTIPLE I/O TERMINAL Configuration Example

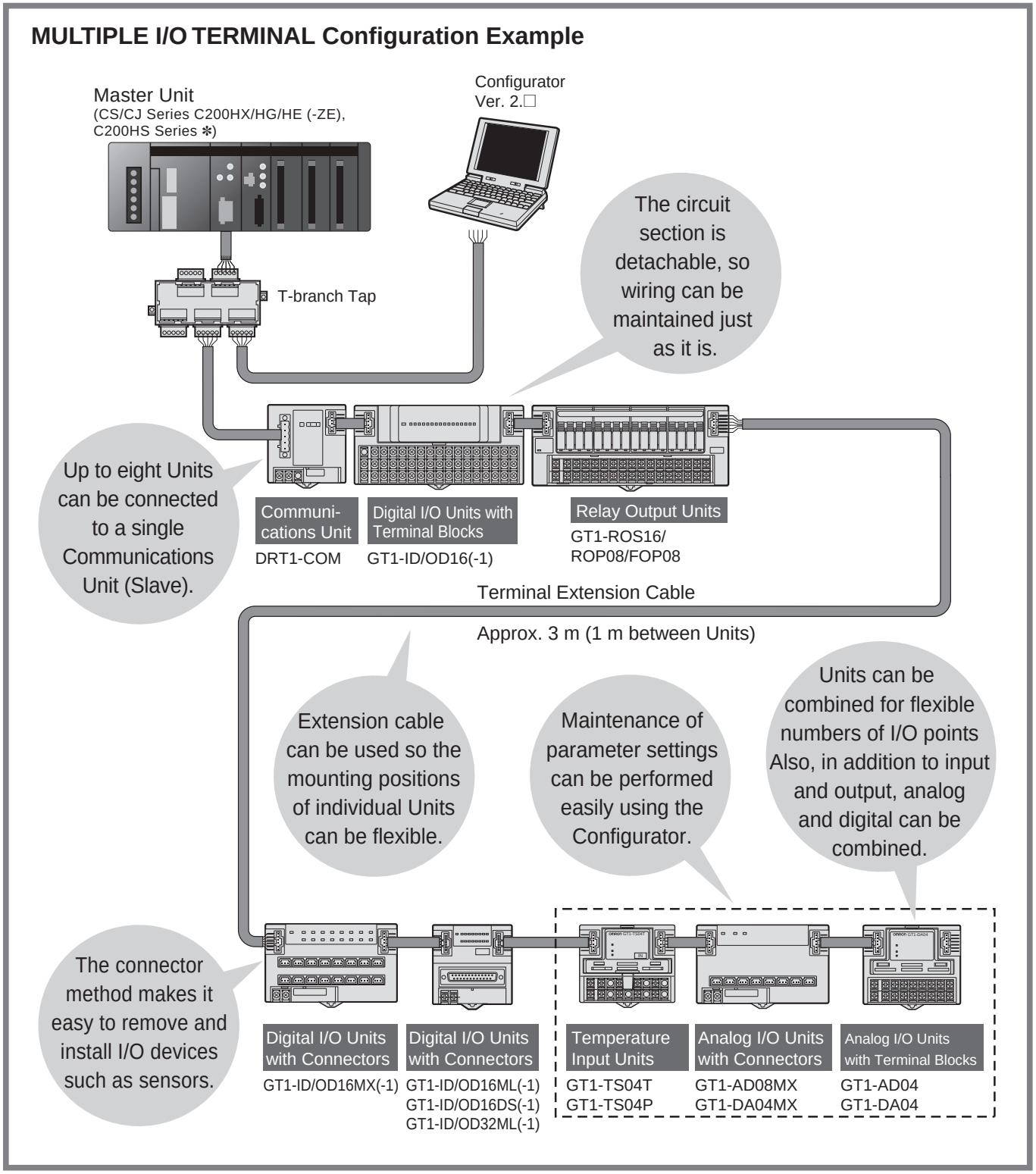

✻ By using the DeviceNet Configurator (sold separately), control can be performed for up to 32,000 points for CJ1W-DRM21 and CS1W-DRM21-V1 DeviceNet Units, and 4,800 points for C200HX/HG/HE Master Units.

Note: The number of I/O points under control may be restricted by the application. Refer to the *DeviceNet MULTIPLE I/O TERMINAL Operation Manual* (W348) for details.

Communications Unit

DRT1-COM

Connects to a Total Maximum of Eight Digital I/O, Analog I/O, and Relay Output Units Compatible with MULTIPLE I/O TERMINAL.

- Allows flexible combinations of I/O points.
- Covering a total cable length of 3 m.
- DIN track mounting.

Ordering Information

Power supply voltage	Model
24 VDC	**DRT1-COM**

General Specifications

Communications power supply voltage	11 to 25 VDC (supplied from the communications connector)
Internal power supply voltage	20.4 to 26.4 VDC (24 VDC +10%/-15%)
I/O power supply voltage	
Current consumption	Communications: 30 mA max. Internal circuit: 0.6 A at 24 VDC (with max. I/O load)
Dielectric strength	500 VAC
Noise immunity	Conforms to IEC61000-4-4, 2 kV (Power line)
Vibration resistance	10 to 150 Hz, 1.0-mm double amplitude or 70 m/s²
Shock resistance	200 m/s²
Mounting strength	No damage when 100 N pull load was applied in all directions (10 N min. in the DIN track direction)
Terminal strength	No damage when 100 N pull load was applied
Screw tightening torque	0.3 to 0.5 N•m Phoenix connector: 0.25 to 0.3 N•m
Ambient operating temperature	-10°C to 55°C (with no icing or condensation)
Ambient operating humidity	25% to 85%
Ambient storage temperature	-25°C to 65°C (with no icing or condensation)
Accessories	End connector (one)

Specifications

Connectable Units		8
Unit I/O points		1,024 max. (including inputs and outputs)
Communications distance	**Total extension**	3 m max.
	Between Units	1 m max. (40 mm max. with the standard cable provided with the Unit) ✻
Dielectric strength		500 VAC for 1 min.
Mounting method		DIN 35 mm-track mounting
Unit output power supply		0.4 A max. (see **Note**.)

✻ One cable is provided with each I/O Unit.
Note: The total current consumption for I/O Unit interfaces must not exceed 0.4 A.

Dimensions

(Unit: mm)

DRT1-COM

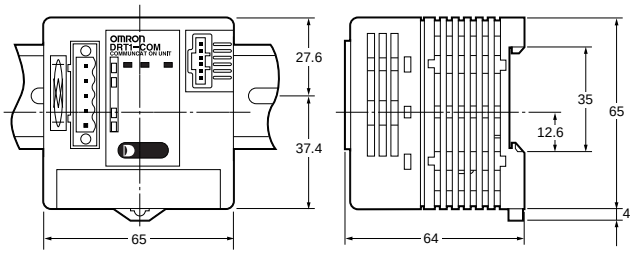

Note: The Unit is shown with the end connector mounted in the above diagram.

Mounting and Connecting Units

● Mounting to DIN Track and Connecting I/O Unit Connecting Cable

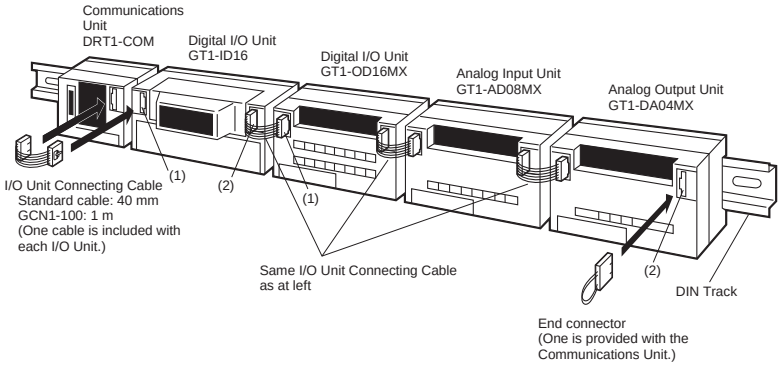

Note: The connecting cable for the I/O Unit is shown below.

Accessory Cable

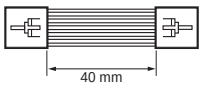

GCN1-100 (Sold Separately)

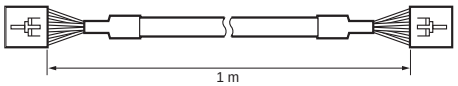

Digital I/O Units

GT1-□D16(-1)/□D16MX(-1)/□D16ML(-1)/□D32ML(-1)/□D16DS(-1)

Digital I/O Units Compatible with MULTIPLE I/O TERMINAL

- Terminal block, connector, and high-density connector models are available.
- The circuit block of the terminal block model can be mounted or dismounted for ease of maintenance without disconnecting the wires.
- DIN track mounting.

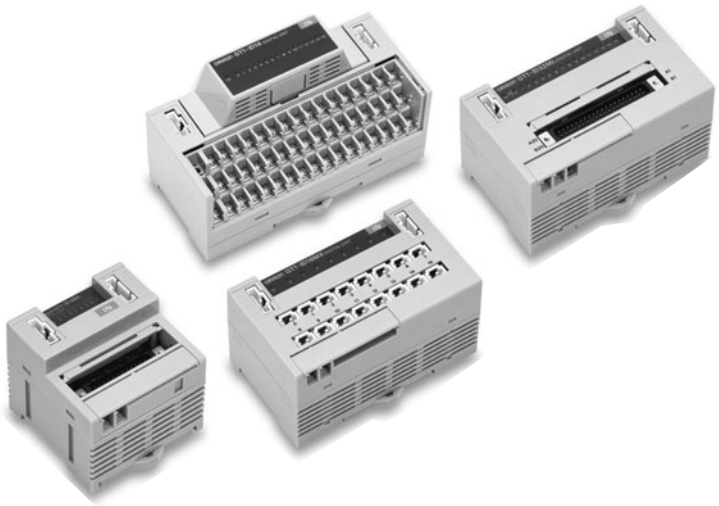

Ordering Information

Unit	I/O classification	Internal I/O common	I/O points	I/O connections	Power supply voltage	I/O specification	Model
Terminal block model	Digital input	NPN (+ common)	16	M3 terminal board	24 VDC	DC/transistor	**GT1-ID16**
		PNP (- common)					**GT1-ID16-1**
	Digital output	NPN (- common)				0.5 A, DC/transistor	**GT1-OD16**
		PNP (+ common)					**GT1-OD16-1**
Connector model	Digital input	NPN (+ common)		Molex connector		DC/transistor	**GT1-ID16MX**
		PNP (- common)					**GT1-ID16MX-1**
	Digital output	NPN (- common)				0.5 A, DC/transistor	**GT1-OD16MX**
		PNP (+ common)					**GT1-OD16MX-1**
	Digital input	NPN (+ common)		Fujitsu connector		DC/transistor	**GT1-ID16ML**
		PNP (- common)					**GT1-ID16ML-1**
	Digital output	NPN (- common)				0.5 A, DC/transistor	**GT1-OD16ML**
		PNP (+ common)					**GT1-OD16ML-1**
	Digital input	NPN (+ common)		D-sub 25-pin connector		DC/transistor	**GT1-ID16DS**
		PNP (- common)					**GT1-ID16DS-1**
	Digital output	NPN (- common)				0.5 A, DC/transistor	**GT1-OD16DS**
		PNP (+ common)					**GT1-OD16DS-1**
High-density connector model	Digital input	NPN (+ common)	32	Fujitsu connector		DC/transistor	**GT1-ID32ML**
		PNP (- common)					**GT1-ID32ML-1**
	Digital output	NPN (- common)				0.5 A, DC/transistor	**GT1-OD32ML**
		PNP (+ common)					**GT1-OD32ML-1**

General Specifications

I/O power supply voltage	20.4 to 26.4 VDC (24 VDC -15%/+10%)		
Current consumption ✻	Model	I/O Interface	Internal circuit
	GT1-ID16(-1)	35 mA max.	--
	GT1-OD16(-1)	35 mA max.	9 mA max.
	GT1-ID16MX(-1)	35 mA max.	--
	GT1-OD16MX(-1)	35 mA max.	9 mA max.
	GT1-ID16ML(-1)	35 mA max.	--
	GT1-OD16ML(-1)	35 mA max.	9 mA max.
	GT1-ID16DS(-1)	35 mA max.	--
	GT1-OD16DS(-1)	35 mA max.	9 mA max.
	GT1-ID32ML(-1)	55 mA max.	--
	GT1-OD32ML(-1)	65 mA max.	11 mA max.
Dielectric strength	500 VAC		
Noise immunity	Conforms to IEC61000-4-4 2 kV (power line)		
Vibration resistance	10 to 150 Hz, 1.0-mm double amplitude or 70 m/s^2		
Shock resistance	200 m/s^2		
Mounting method	DIN 35 mm-track mounting		
Mounting strength	No damage when 100 N pull load was applied in all directions (10 N min. in the DIN track direction)		
Terminal strength	No damage when 100 N pull load was applied		
Screw tightening torque	0.3 to 0.5 N•m		
Ambient operating temperature	-10°C to 55°C (with no icing or condensation)		
Ambient operating humidity	25% to 85% (with no icing or condensation)		
Ambient storage temperature	-25°C to 65°C		
Accessories	I/O Unit Connecting Cable (40 mm)		

✻ The above current consumption is a value with all 16 and 32 points turned ON excluding the current consumption of the external sensor connected to the Input Unit and the current consumption of the load connected to the Output Unit.

Applicable Connectors

Note: Refer to page 144 for Peripheral Devices.

Input Specifications

Item / Model	GT1-ID□□
ON delay	1.5 ms max.
OFF delay	1.5 ms max.
ON voltage	15 V min. (between each input terminal and V or G)
OFF voltage	5 V max. (between each input terminal and V or G)
OFF current	1 mA max.
Insulation method	Photocoupler
Input indicators	LED (yellow)

Output Specifications

Item / Model	GT1-OD□□
Rated output current	0.5 A/point ✻
ON delay	0.5 ms max.
OFF delay	1.0 ms max.
Residual voltage	1.2 V max.
Leakage current	0.1 mA max.
Insulation method	Photocoupler
Output indicators	LED (yellow)

✻ Ensure that the total external load current does not exceed the values given in the following table.

Model	Total external load current
GT1-OD16/16MX/32ML(-1)	4 A
GT1-OD16ML/16DS(-1)	2.5 A

Cables for I/O Connector

Cables for Connector Terminal Conversion Units (16 Points)

I/O classification	Model	Applicable cable	Connectable model	Connector Products (Connector-Terminal Block Conversion Units) Connecting method
Digital input (16 points)	GT1-ID16ML(-1)	XW2Z-□□□A	XW2R-J20G-T	Phillips screw M3
			XW2R-E20G-T	Slotted screw M3
			XW2R-P20G-T	Push-in spring
			XW2E-20G5-IN16	Phillips screw Common terminal (3-tier input type) M3.5
Digital output (16 points)	GT1-OD16ML(-1)		XW2R-J20G-T	Phillips screw M3
			XW2R-E20G-T	Slotted screw M3
			XW2R-P20G-T	Push-in spring

Cables for Connector Terminal Conversion Units (32 Points)

I/O classification	Model	Applicable cable	Connectable model	Connector Products (Connector-Terminal Block Conversion Units) Connecting method
Digital input (32 points)	GT1-ID32ML(-1)	XW2Z-□□□B	XW2R-J40G-T	Phillips screw M3
Digital output (32 points)	GT1-OD32ML(-1)		XW2R-E40G-T	Slotted screw M3
			XW2R-P40G-T	Push-in spring

Cables for I/O Blocks (16 Points)

I/O classification	Model	Applicable cable	Connectable model	Remarks
Digital input (16 points) NPN	GT1-ID16ML	XW2Z-R□C	G7TC-ID16 G7TC-IA16	For I/O Block input
Digital input (16 points) PNP	GT1-ID16ML-1		G7TC-ID16-1 G7TC-IA16-1	For I/O Block output
Digital output (16 points) NPN	GT1-OD16ML		G7TC-OC16 G7TC-OC08 G70D-SOC16 G70D-FOM16 G70D-VSOC16 G70D-VFOM16 G70A-ZOC16-3	For I/O Block output
			M7E Series	Digital Display Unit
Digital output (16 points) PNP	GT1-OD16ML-1		G7TC-OC16-1 G70D-SOC16-1 G70A-ZOC16-4	For I/O Block output
			M7E-01MB□-□□	Digital Display Unit

Cables for I/O Blocks (32 Points)

I/O classification	Model	Applicable cable	Connectable model	Remarks
Digital input (32 points) NPN	GT1-ID32ML	XW2Z-RI□C-□	G7TC-ID16 G7TC-IA16	For I/O Block input
Digital input (32 points) PNP	GT1-ID32ML-1		G7TC-ID16-1 G7TC-IA16-1	For I/O Block input
Digital output (32 points) NPN	GT1-OD32ML	XW2Z-RO□C-□	G7TC-OC16 G7TC-OC08 G70D-SOC16 G70D-FOM16 G70D-VSOC16 G70D-VFOM16 G70A-ZOC16-3	For I/O Block output
Digital output (32 points) PNP	GT1-OD32ML-1		G7TC-OC16-1 G70D-SOC16-1 G70D-FOM16-1 G70A-ZOC16-4	For I/O Block output

Note: For details of applicable cables and connectors, refer to Peripheral Devices.

Dimensions

(Unit: mm)

● Terminal Block Model
GT1-ID16
GT1-ID16-1
GT1-OD16
GT1-OD16-1

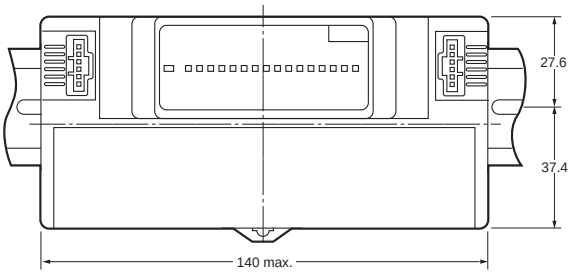

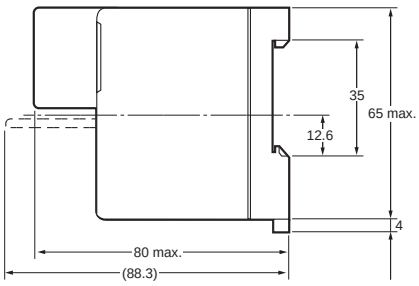

Note: Accessory cable included.

● Connector Model
GT1-ID16MX
GT1-ID16MX-1
GT1-OD16MX
GT1-OD16MX-1

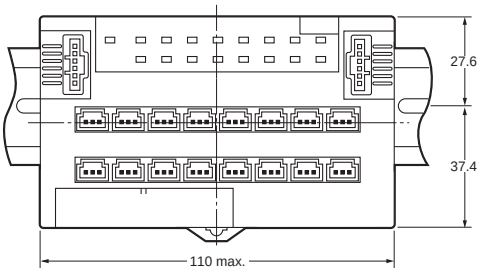

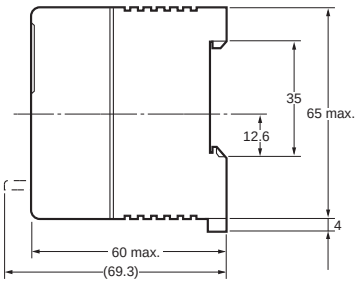

Note: Accessory cable included.

● Connector Model
GT1-ID16ML
GT1-ID16ML-1
GT1-OD16ML
GT1-OD16ML-1

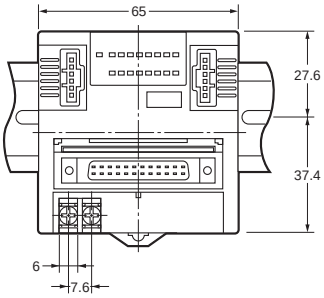

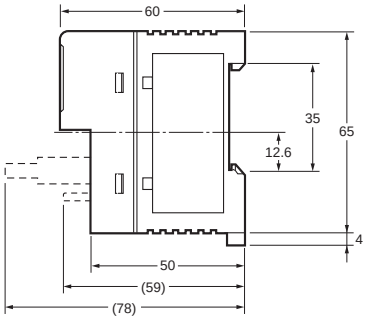

Note: Accessory cable included.

● Connector Model
GT1-ID16DS
GT1-ID16DS-1
GT1-OD16DS
GT1-OD16DS-1

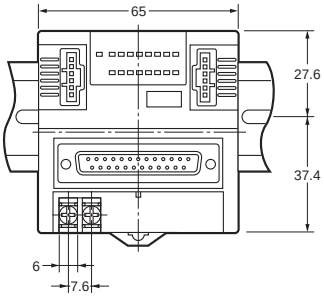

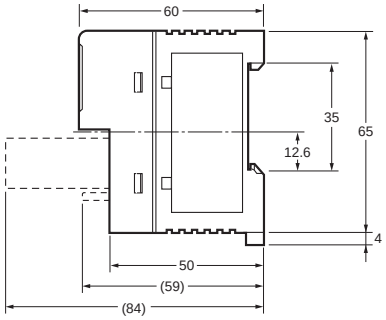

Note: Accessory cable included.

● High-density Connector Model
GT1-ID32ML
GT1-ID32ML-1
GT1-OD32ML
GT1-OD32ML-1

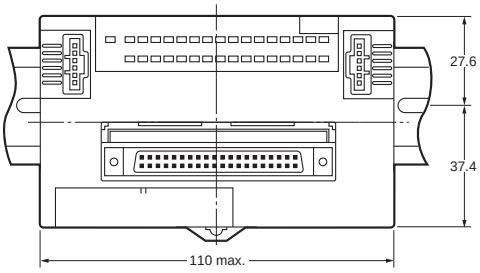

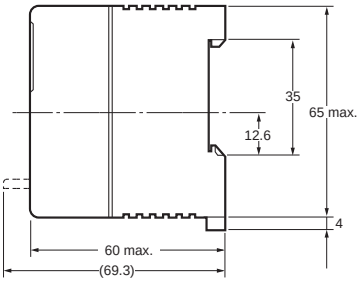

Note: Accessory cable included.

Wiring Diagrams

GT1-ID16

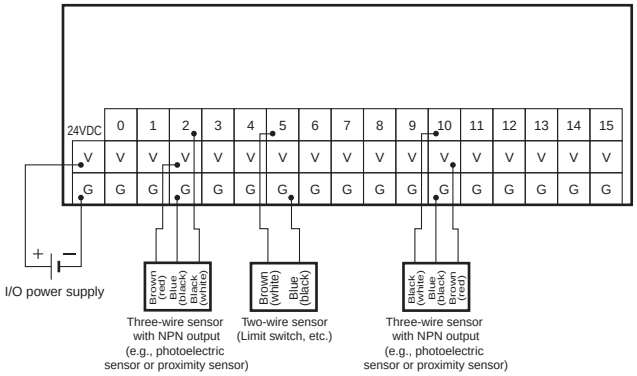

GT1-ID16-1

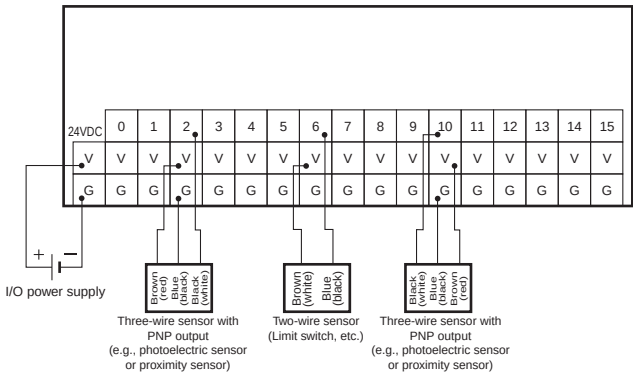

GT1-OD16

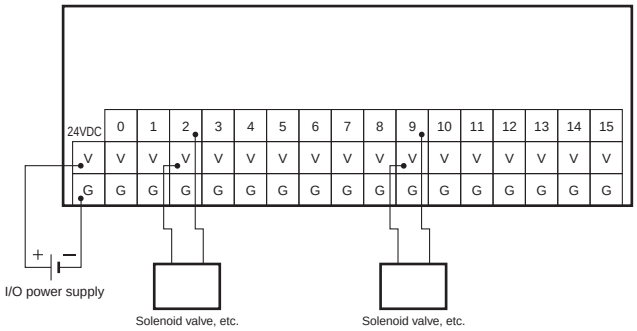

GT1-OD16-1

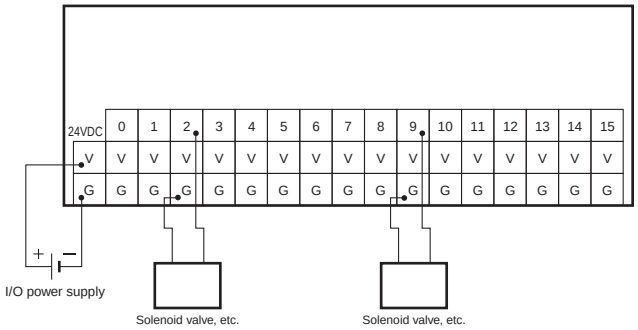

GT1-ID16MX

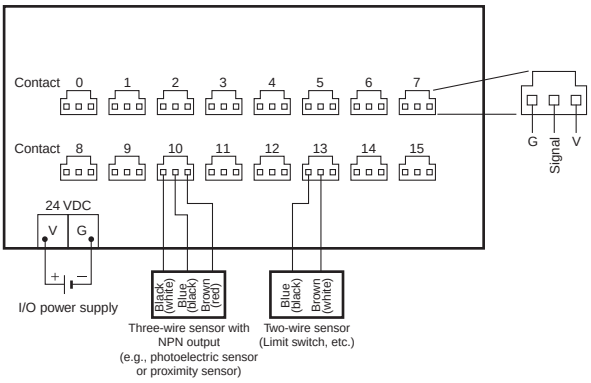

GT1-ID16MX-1

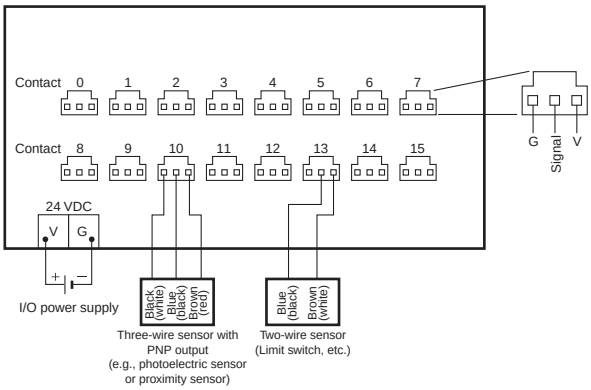

GT1-OD16MX

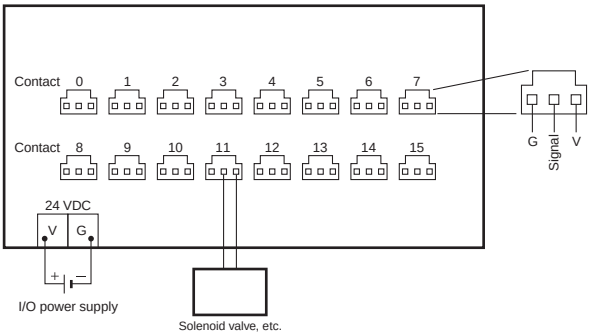

GT1-OD16MX-1

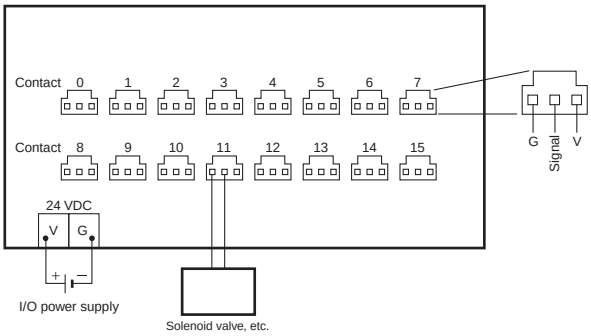

GT1-ID16ML

Connector Pin Arrangement

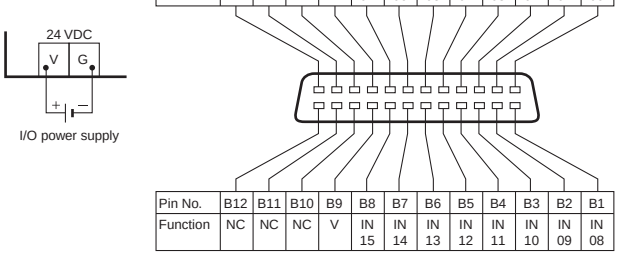

Pin No.	A12	A11	A10	A9	A8	A7	A6	A5	A4	A3	A2	A1
Function	NC	NC	NC	V	IN 07	IN 06	IN 05	IN 04	IN 03	IN 02	IN 01	IN 00

Pin No.	B12	B11	B10	B9	B8	B7	B6	B5	B4	B3	B2	B1
Function	NC	NC	NC	V	IN 15	IN 14	IN 13	IN 12	IN 11	IN 10	IN 09	IN 08

GT1-ID16ML-1

Connector Pin Arrangement

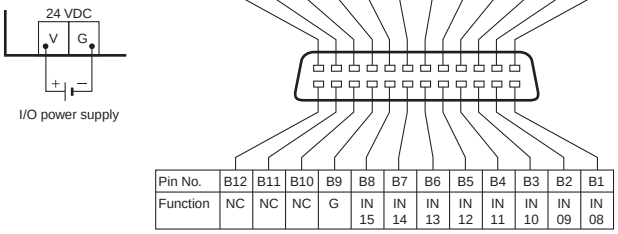

Pin No.	A12	A11	A10	A9	A8	A7	A6	A5	A4	A3	A2	A1
Function	NC	NC	NC	G	IN 07	IN 06	IN 05	IN 04	IN 03	IN 02	IN 01	IN 00

Pin No.	B12	B11	B10	B9	B8	B7	B6	B5	B4	B3	B2	B1
Function	NC	NC	NC	G	IN 15	IN 14	IN 13	IN 12	IN 11	IN 10	IN 09	IN 08

GT1-OD16ML

Connector Pin Arrangement

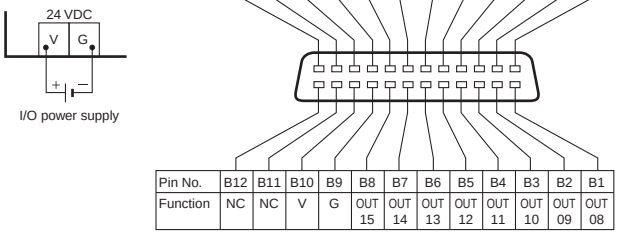

Pin No.	A12	A11	A10	A9	A8	A7	A6	A5	A4	A3	A2	A1
Function	NC	NC	V	G	OUT 07	OUT 06	OUT 05	OUT 04	OUT 03	OUT 02	OUT 01	OUT 00

Pin No.	B12	B11	B10	B9	B8	B7	B6	B5	B4	B3	B2	B1
Function	NC	NC	V	G	OUT 15	OUT 14	OUT 13	OUT 12	OUT 11	OUT 10	OUT 09	OUT 08

GT1-OD16ML-1

Connector Pin Arrangement

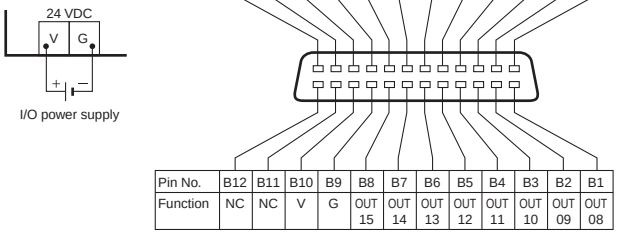

Pin No.	A12	A11	A10	A9	A8	A7	A6	A5	A4	A3	A2	A1
Function	NC	NC	V	G	OUT 07	OUT 06	OUT 05	OUT 04	OUT 03	OUT 02	OUT 01	OUT 00

Pin No.	B12	B11	B10	B9	B8	B7	B6	B5	B4	B3	B2	B1
Function	NC	NC	V	G	OUT 15	OUT 14	OUT 13	OUT 12	OUT 11	OUT 10	OUT 09	OUT 08

GT1-ID16DS

Connector Pin Arrangement

Pin No.	13	12	11	10	9	8	7	6	5	4	3	2	1
Function	NC	NC	NC	V	G	IN 07	IN 06	IN 05	IN 04	IN 03	IN 02	IN 01	IN 00

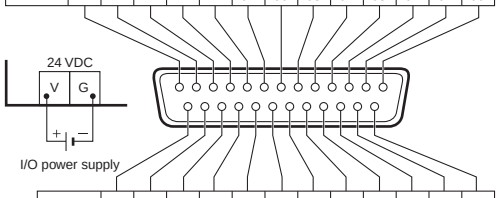

Pin No.	25	24	23	22	21	20	19	18	17	16	15	14
Function	NC	NC	V	G	IN 15	IN 14	IN 13	IN 12	IN 11	IN 10	IN 09	IN 08

GT1-ID32ML

Connector Pin Arrangement

	Pin No.	A20	A19	A18	A17	A16	A15	A14	A13	A12	A11	A10	A9	A8	A7	A6	A5	A4	A3	A2	A1
Wd m	Function	NC	NC	V	IN 15	IN 14	IN 13	IN 12	IN 11	IN 10	IN 09	IN 08	V	IN 07	IN 06	IN 05	IN 04	IN 03	IN 02	IN 01	IN 00

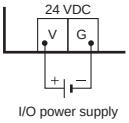

	Pin No.	B20	B19	B18	B17	B16	B15	B14	B13	B12	B11	B10	B9	B8	B7	B6	B5	B4	B3	B2	B1
Wd m+1	Function	NC	NC	V	IN 15	IN 14	IN 13	IN 12	IN 11	IN 10	IN 09	IN 08	V	IN 07	IN 06	IN 05	IN 04	IN 03	IN 02	IN 01	IN 00

GT1-ID16DS-1

Connector Pin Arrangement

Pin No.	13	12	11	10	9	8	7	6	5	4	3	2	1
Function	NC	NC	NC	V	G	IN 07	IN 06	IN 05	IN 04	IN 03	IN 02	IN 01	IN 00

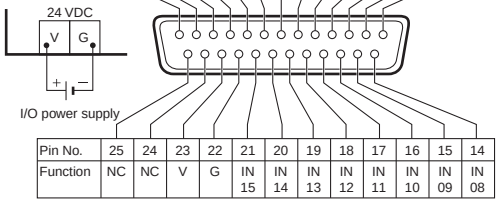

Pin No.	25	24	23	22	21	20	19	18	17	16	15	14
Function	NC	NC	V	G	IN 15	IN 14	IN 13	IN 12	IN 11	IN 10	IN 09	IN 08

GT1-ID32ML-1

Connector Pin Arrangement

	Pin No.	A20	A19	A18	A17	A16	A15	A14	A13	A12	A11	A10	A9	A8	A7	A6	A5	A4	A3	A2	A1
Wd m	Function	NC	NC	G	IN 15	IN 14	IN 13	IN 12	IN 11	IN 10	IN 09	IN 08	G	IN 07	IN 06	IN 05	IN 04	IN 03	IN 02	IN 01	IN 00

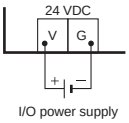

	Pin No.	B20	B19	B18	B17	B16	B15	B14	B13	B12	B11	B10	B9	B8	B7	B6	B5	B4	B3	B2	B1
Wd m+1	Function	NC	NC	G	IN 15	IN 14	IN 13	IN 12	IN 11	IN 10	IN 09	IN 08	G	IN 07	IN 06	IN 05	IN 04	IN 03	IN 02	IN 01	IN 00

GT1-OD16DS

Connector Pin Arrangement

Pin No.	13	12	11	10	9	8	7	6	5	4	3	2	1
Function	NC	NC	NC	V	G	OUT 07	OUT 06	OUT 05	OUT 04	OUT 03	OUT 02	OUT 01	OUT 00

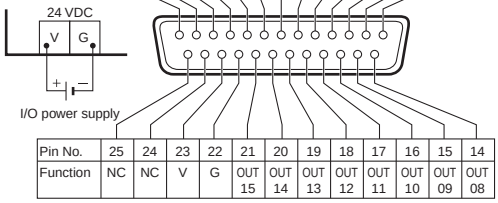

Pin No.	25	24	23	22	21	20	19	18	17	16	15	14
Function	NC	NC	V	G	OUT 15	OUT 14	OUT 13	OUT 12	OUT 11	OUT 10	OUT 09	OUT 08

GT1-OD32ML

Connector Pin Arrangement

	Pin No.	A20	A19	A18	A17	A16	A15	A14	A13	A12	A11	A10	A9	A8	A7	A6	A5	A4	A3	A2	A1
Wd m	Function	V	G	OUT 15	OUT 14	OUT 13	OUT 12	OUT 11	OUT 10	OUT 09	OUT 08	V	G	OUT 07	OUT 06	OUT 05	OUT 04	OUT 03	OUT 02	OUT 01	OUT 00

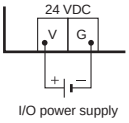

	Pin No.	B20	B19	B18	B17	B16	B15	B14	B13	B12	B11	B10	B9	B8	B7	B6	B5	B4	B3	B2	B1
Wd m+1	Function	V	G	OUT 15	OUT 14	OUT 13	OUT 12	OUT 11	OUT 10	OUT 09	OUT 08	V	G	OUT 07	OUT 06	OUT 05	OUT 04	OUT 03	OUT 02	OUT 01	OUT 00

GT1-OD16DS-1

Connector Pin Arrangement

Pin No.	13	12	11	10	9	8	7	6	5	4	3	2	1
Function	NC	NC	NC	V	G	OUT 07	OUT 06	OUT 05	OUT 04	OUT 03	OUT 02	OUT 01	OUT 00

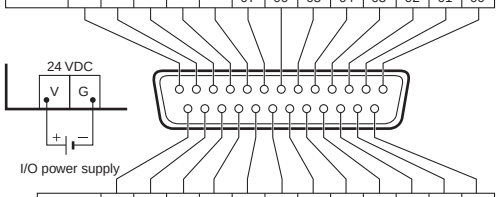

Pin No.	25	24	23	22	21	20	19	18	17	16	15	14
Function	NC	NC	V	G	OUT 15	OUT 14	OUT 13	OUT 12	OUT 11	OUT 10	OUT 09	OUT 08

GT1-OD32ML-1

Connector Pin Arrangement

	Pin No.	A20	A19	A18	A17	A16	A15	A14	A13	A12	A11	A10	A9	A8	A7	A6	A5	A4	A3	A2	A1
Wd m	Function	V	G	OUT 15	OUT 14	OUT 13	OUT 12	OUT 11	OUT 10	OUT 09	OUT 08	V	G	OUT 07	OUT 06	OUT 05	OUT 04	OUT 03	OUT 02	OUT 01	OUT 00

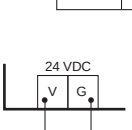

	Pin No.	B20	B19	B18	B17	B16	B15	B14	B13	B12	B11	B10	B9	B8	B7	B6	B5	B4	B3	B2	B1
Wd m+1	Function	V	G	OUT 15	OUT 14	OUT 13	OUT 12	OUT 11	OUT 10	OUT 09	OUT 08	V	G	OUT 07	OUT 06	OUT 05	OUT 04	OUT 03	OUT 02	OUT 01	OUT 00

Relay Output Units

GT1-ROS16/ROP08/FOP08

Relay Output Unit Compatible with MULTIPLE I/O TERMINAL

- 8- and 16-point relay output models are available.
- Equipped with 8-point SSRs.
- DIN track mounting.

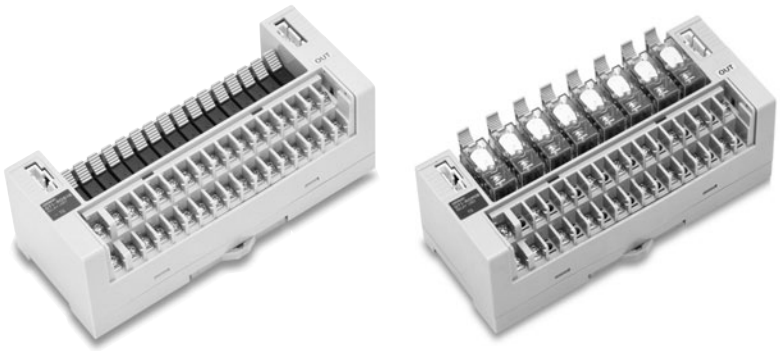

Ordering Information

I/O classification	I/O points	I/O connections	Power supply voltage	I/O specification	Model
Relay output	16	M3 terminal block	24 VDC	2 A, SPST-NO	**GT1-ROS16**
	8			5 A, SPST-NO	**GT1-ROP08**
SSR	8			--	**GT1-FOP08**

General Specifications

I/O power supply voltage	20.4 to 26.4 VDC (24 VDC -15%/+10%)			
Current consumption ✻	I/O Unit interface		I/O power supply	
	GT1-ROP08	40 mA max.	**GT1-ROP08**	350 mA max.
	GT1-FOP08		**GT1-FOP08**	
	GT1-ROS16	50 mA max.	**GT1-ROS16**	250 mA max.
Connectable Units	8			
Dielectric strength	500 VAC (between isolated circuits)			
Noise immunity	Conforms to IEC 61000-4-4, 2 kV (power line)			
Vibration resistance	10 to 55 Hz, 1.0-mm double amplitude or 70 m/s²			
Shock resistance	200 m/s²			
Mounting method	DIN 35 mm-track mounting			
Mounting strength	No damage when 100 N pull load was applied in all directions			
Terminal strength	No damage when 100 N pull load was applied			
Screw tightening torque	0.3 to 0.5 N•m			
Ambient operating temperature	-10°C to 55°C			
Ambient operating humidity	25% to 85% (with no icing or condensation)			
Ambient storage temperature	-25°C to 65°C			
Accessories	I/O Unit Connecting Cable (40 mm)			

✻ The above current consumption is a value with all the points turned ON including the current consumption of the relay coils.

Relay Output Specifications

Item / Model	GT1-ROS16	GT1-ROP08	GT1-FOP08
Relay model	G6D-1A-ASI (24 VDC)	G2R-1-SN (24 VDC)	G3R-ODX02SH-UTU (5 to 24 VDC)
Maximum contact current	2 A	5 A	0.01 to 1.5 A
Minimum applicable load (reference values)	5 VDC, 10 mA	5 VDC, 100 mA	4 to 48 VDC
Electrical life expectancy	100,000 operations min. with switching frequency of 1,800 operations per hour (at ambient temperature of 23°C with rated load)		--
Mechanical life expectancy	20,000,000 operations min. with switching frequency of 18,000 operations per hour (at ambient temperature of 23°C with rated load)		--

Internal Circuit Configuration

GT1-ROS16

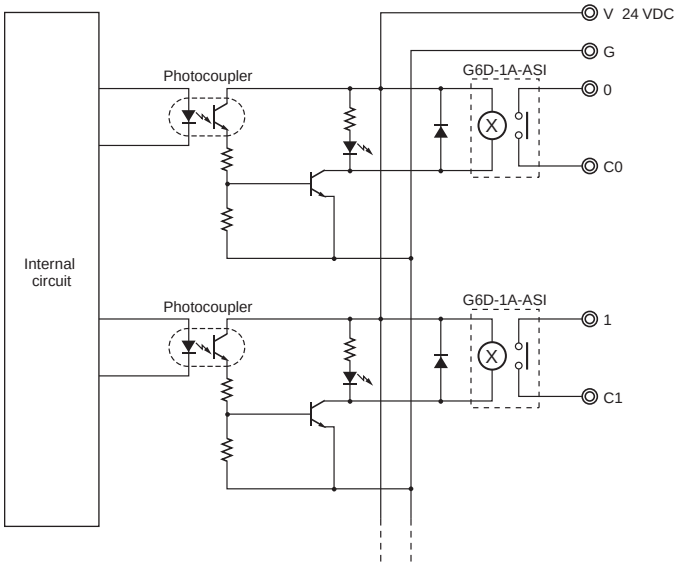

GT1-ROP08

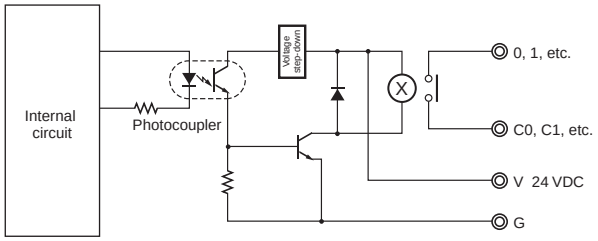

GT1-FOP08

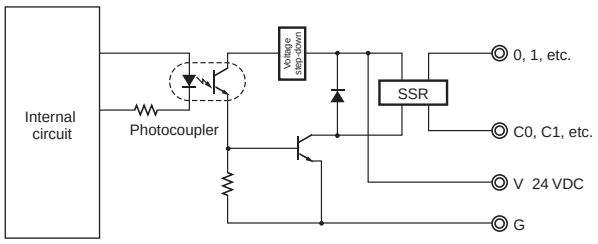

Dimensions

(Unit: mm)

GT1-ROS16

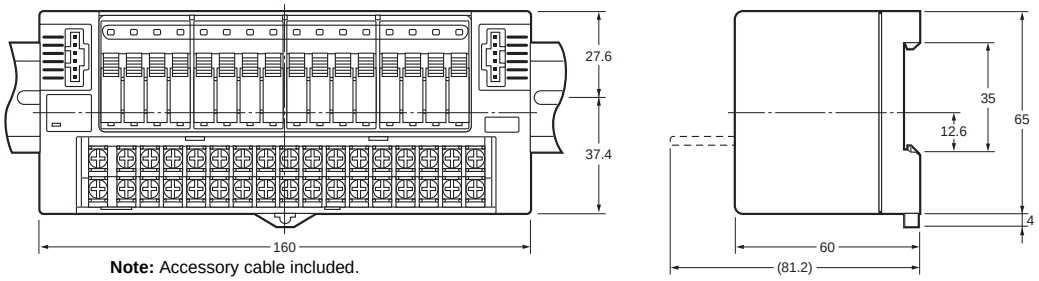

Note: Accessory cable included.

GT1-ROP08
GT1-FOP08

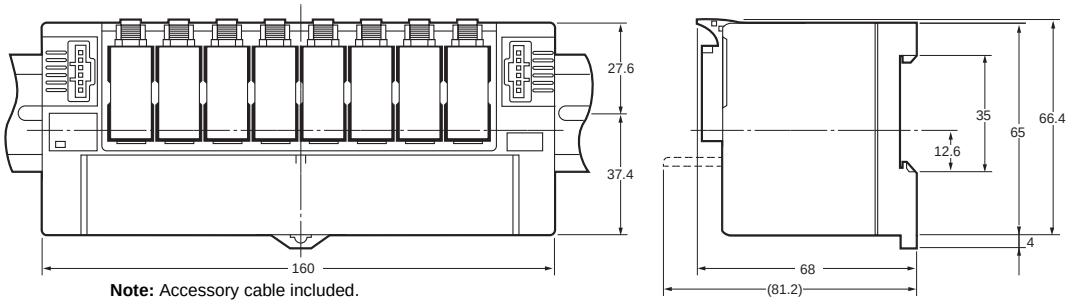

Note: Accessory cable included.

Wiring Diagrams

GT1-ROS16

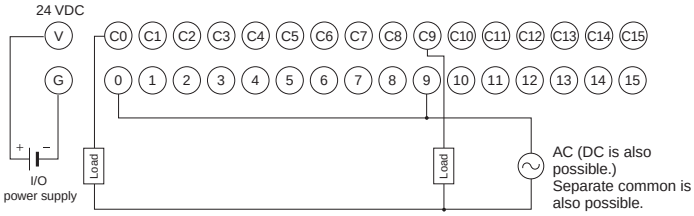

GT1-ROP08/GT1-FOP08

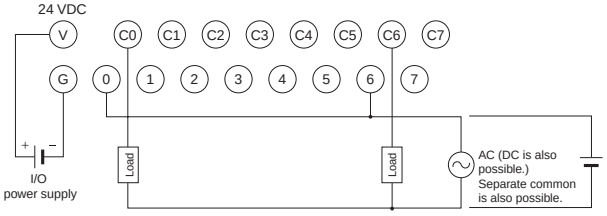

Note: The GT1-FOP08 can use only a DC power supply.

Analog I/O Units

GT1-AD/DA

Analog Input/Output Units Compatible with MULTIPLE I/O TERMINAL

- Input block incorporates connectors that can be easily mounted or dismounted. (GT1-AD08MX, GT1-DA04MX)
- 8 or 4 inputs.
- 4 outputs.
- High resolution of 1/6,000.
- High conversion speed of 8 ms/8 points or 4 ms/4 points.
- DIN track mounting.

Connector model

Terminal Block Model

Ordering Information

I/O classification	I/O points	I/O connections	Power supply voltage	I/O specification	Model
Analog input	8	Molex connector	24 VDC	4 to 20 mA, 0 to 20 mA, 0 to 5 V, 1 to 5 V, 0 to 10 V, -10 to 10 V	**GT1-AD08MX**
	4	Terminal block			**GT1-AD04**
Analog output	4	Molex connector	24 VDC	0 to 5 V, 1 to 5 V, 0 to 10 V, -10 to 10 V	**GT1-DA04MX**
		Terminal block		0 to 5 V, 1 to 5 V, 0 to 10 V, -10 to 10 V, 4 to 20 mA	**GT1-DA04**

General Specifications

I/O power supply voltage	20.4 to 26.4 VDC (24 VDC -15%/+10%) ✻	
Current consumption	I/O Unit interface	Internal circuitry power supply
	50 mA max.	GT1-AD08MX: 100 mA max. GT1-AD04: 100 mA max. GT1-DA04MX: 100 mA max. GT1-DA04: 150 mA max.
Noise immunity	Conforms to IEC 61000-4-4, 2 kV (power line)	
Vibration resistance	10 to 150 Hz, 1.0-mm double amplitude or 70 m/s²	
Shock resistance	200 m/s²	
Dielectric strength	500 VAC	
Mounting method	DIN 35 mm-track mounting	
Mounting strength	No damage when 100 N pull load was applied in all directions (10 N min. in the DIN track direction)	
Terminal strength	No damage when 100 N pull load was applied	
Ambient operating temperature	-10°C to 55°C	
Ambient operating humidity	25% to 85% (with no condensation)	
Ambient storage temperature	-25°C to 65°C	
Accessories	I/O Unit Connecting Cable (40 mm)	

✻ Power for analog I/O is provided from the internal power supply.

Applicable Connector

Note: Refer to page 144 for Peripheral Devices.

Input Specifications

Item	Specifications	Voltage input	Current input
Input type		0 to 5 V, 1 to 5 V, 0 to 10 V, -10 to 10 V	0 to 20 mA, 4 to 20 mA
Maximum signal input		± 15V	± 30 mA
Input impedance		1MΩ min.	Approx. 250 Ω
Resolution		1/6,000 (FS)	
Overall accuracy	**25°C**	±0.3% FS	±0.4% FS
	-10°C to 55°C	±0.6% FS	±0.8% FS
Conversion speed		8 ms/8 points, 4 ms/4 points	
Conversion output data		Binary data -10 to 10-V range: F448 to 0BB8 full scale Other signal ranges: 0000 to 1770 full scale	
Insulation method		Transistor or photocoupler insulation between inputs and power lines.	

Output Specifications

Item	Specifications	Voltage output	Current output
Output type		0 to 5 V, 1 to 5 V, 0 to 10 V, -10 to 10 V	4 to 20 mA
Output permissible load resistance		5kΩ min.	600 Ω max.
Output impedance		0.5Ω max.	--
Resolution		1/6,000 (FS)	
Overall accuracy	**25°C**	±0.4% FS	
	-10°C to 55°C	±0.8% FS	
Conversion speed		4 ms/4 points	
DA output data		Binary data -10 to 10 V range: F448 to 0BB8 full scale Other signal ranges: 0000 to 1770 full scale	
Insulation method		Transistor or photocoupler insulation between outputs and power lines.	

Dimensions

(Unit: mm)

GT1-AD08MX
GT1-DA04MX
(Molex Connector Models)

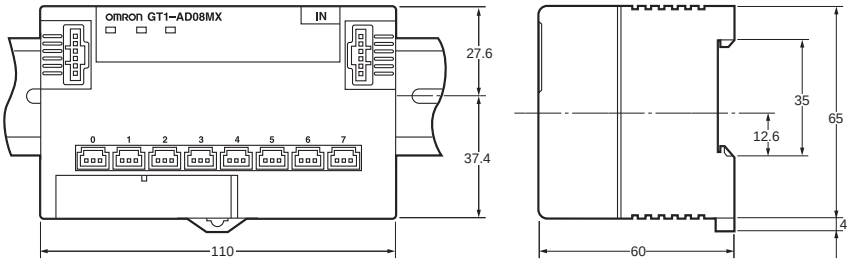

Note: Accessory cable included.

GT1-AD04
GT1-DA04
(Terminal Block Models)

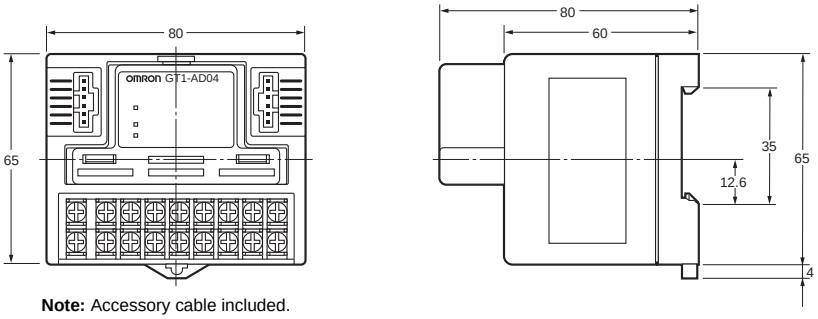

Note: Accessory cable included.

Wiring Diagrams

GT1-AD08MX

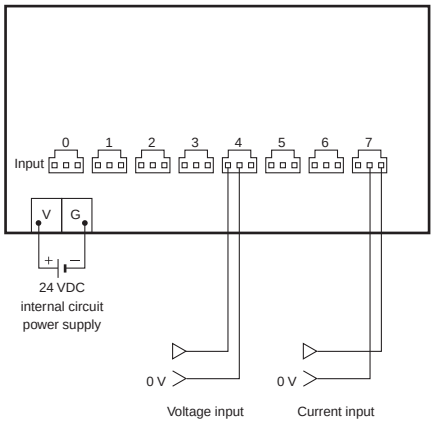

GT1-AD04

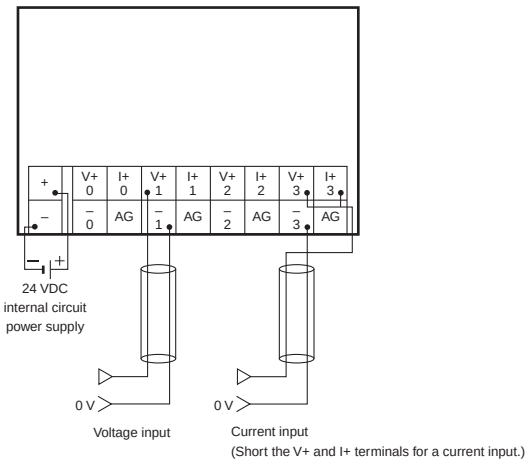

GT1-DA04MX

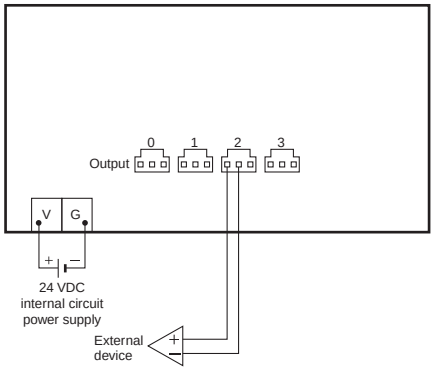

GT1-DA04

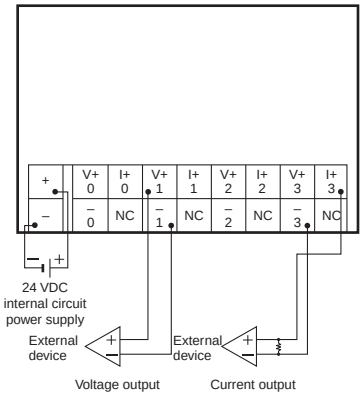

Temperature Input Units

GT1-TS04□

Temperature Input Units for use with MULTIPLE I/O TERMINAL

- Four inputs.
- Thermocouples and platinum resistance thermometer models are available.
- Conversion time is only 250 ms for 4 inputs.
- The Configurator can be used to calibrate temperatures.
- The circuit section can be removed, so rewiring isn't required during maintenance.
- DIN track mounting.

Ordering Information

I/O classification	I/O points	I/O connections	Power supply voltage	Input specification	Model
Temperature inputs	4 inputs	Terminal Block	24 VDC	Thermocouple	**GT1-TS04T**
				Platinum resistance thermometer	**GT1-TS04P**

General Specifications

I/O power supply voltage	20.4 to 26.4 VDC (24 VDC -15%/+10%)	
Current consumption	I/O Unit interface	Internal power supply
	50 mA max.	80 mA max.
Vibration resistance	10 to 150 Hz, 0.7-mm amplitude or 50 m/s²	
Shock resistance	150 m/s²	
Dielectric strength	500 VAC	
Mounting method	DIN 35 mm-track mounting	
Ambient operating temperature	-10°C to 55°C	
Ambient operating humidity	25% to 85% (with no condensation)	
Ambient storage temperature	-25°C to 65°C	
Accessories	I/O Unit Connecting Cable (40 mm)	

Input Specifications

Item / Model	GT1-TS04T	GT1-TS04P
Input type	R, S, K, J, T, L, or B selectable	Pt100 or Jpt100 selectable
Indicator accuracy	(±0.3% of indication value or ±1°C, whichever is larger) ±1 digit max. ✻	-200.0 to 650.0°C input range: (±0.3% of indication value or ±0.8°C, whichever is larger) ±1 digit max. -200 to 200°C input range: (±0.3% of indication value or ±0.5°C, whichever is larger) ±1 digit max.
Conversion cycle	250 ms/4 points	
Temperature conversion data	Binary data	
Insulation method	Between input and communication lines: Photocoupler insulation Between temperature input signals: Photocoupler insulation	

✻ K or T below -100°C: +2°C ±1 digit max. L: ±2°C ±1 digit max.
R or S below 200°C: ±3°C ±1 digit max. B below 400°C: No standard set

Wiring Diagrams

GT1-TS04T

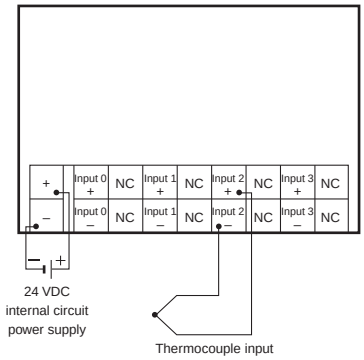

GT1-TS04P

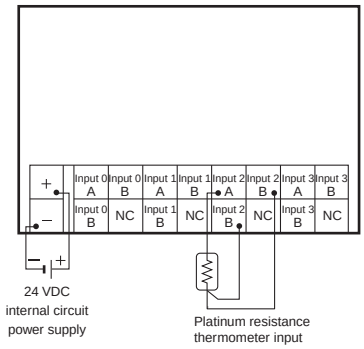

Dimensions

(Unit: mm)

GT1-TS04T
GT1-TS04P

(Example: GT1-TS04T)

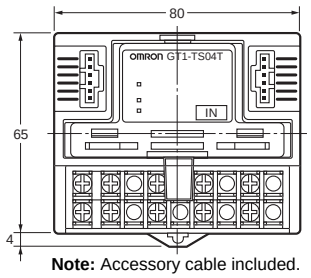

Note: Accessory cable included.

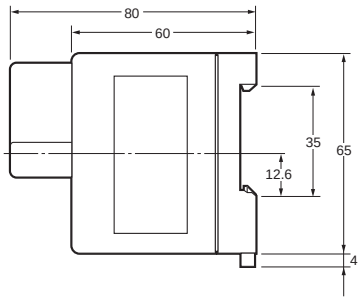

MEMO

Intelligent Slaves (PLC Units)

Programmable Slaves 88
CPM2C-S1□0C-DRT

Programmable Slaves

CPM2C-S1□0C-DRT

Slaves with the Complex Functionality Needed for Distributed Blocks

Programmable Slaves combine devices, such as sensors and actuators, into one functional unit that is treated as a DeviceNet slave.
Programmable Slaves greatly facilitate device distribution and functional organization. They help standardize programming between units and reduce the amount of programming required at the master.
I/O and operational checks can be performed for each functional unit, rather than waiting for final system assembly, as with conventional distributed I/O systems.

- A Programmable Slave can be programmed from a CX-Programmer up to 3 network levels away. (Includes the DeviceNet network itself. Possible only with CX-Programmer Ver. 2.1 or later and a Programmable Slave Ver. 1.04 or later.)
- DeviceNet Slave Functions
  Multiword I/O links and explicit messages are used to control slaves from the master. Log data for communications can be sent in one operation whenever necessary using explicit messages.
- CompoBus/S Master Functions
  Less wiring is required for terminal block expansions, connections to remote devices (such as signal lights or pushbutton switches), and connections to pneumatic valves and other non-OMRON products. Connect using VCTF cable or Special Flat Cable, which allows easy branching.
- RS-232C Communications
  Connected to bar code readers, Programmable Terminals, and other devices, the Programmable Slave processes data locally to reduce the load on the master.
- Expansion Units (3 max.)
  Just one Unit is required for each distributed block, reducing the number of interfaces for multipoint communications to, in turn, reduce costs.

Ordering Information

Unit type		Input	Output	Clock	Model
10 I/O points 6 inputs; 4 outputs	Connector	6 points: 24 VDC	4 points: transistor (sinking)	Yes	**CPM2C-S100C-DRT**
			4 points: transistor (sourcing)	Yes	**CPM2C-S110C-DRT**

Note 1: For details on CPM2C PLCs, refer to the *CPM2A/CPM2C Catalog* (P049).
Note 2: For details on Programmable Slave specifications, refer to the *Programmable Slave Catalog* (R071).

System Configuration

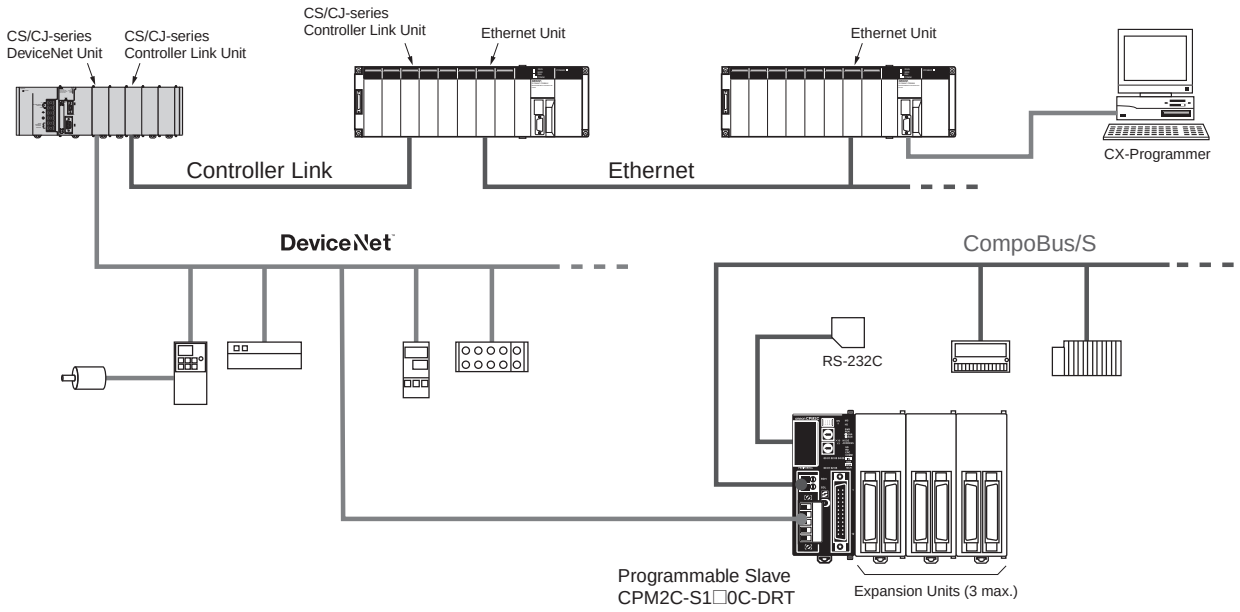

General Specifications and Performance Specifications

Item		Specifications
Control method		Stored program method
I/O control method		Cyclic scan method (Immediate refreshing can be performed with IORF instruction.)
Programming language		Ladder diagram
Instruction length		1 step per instruction, 1 to 5 words per instruction
Instructions	**Basic instructions**	14 instructions
	Special instructions	105 instructions, 185 variations
Execution time	**Basic instructions**	0.64 µs (LD instruction)
	Special instructions	7.8 µs (MOV instruction)
Program capacity		4,096 words
Maximum I/O points		CPU Unit only: 10 points Expansion I/O: 96 points (32-point Expansion I/O Unit × 3) CompoBus/S: 256 points (362 in total)
Input bits		IR 00000 to IR 00915 (Bits not used for input bits can be used for work bits.)
Output bits		IR 01000 to IR 01915 (Bits not used for output bits can be used for work bits.)
CompoBus/S input bits		128 bits: IR 02000 to IR 02715 (Words IR 020 to IR 027)
CompoBus/S output bits		128 bits: IR 03000 to IR 03715 (Words IR 030 to IR 037)
Work bits		672 bits: IR 02800 to IR 02915 (Words IR 028 to IR 029) IR 03800 to IR 03915 (Words IR 038 to IR 039) IR 04000 to IR 04915 (Words IR 040 to IR 049) IR 20000 to IR 22715 (Words IR 200 to IR 227)
Special bits (SR area)		440 bits: SR 22800 to SR 25507 (Words IR 228 to IR 225)
Temporary bits (TR area)		8 bits (TR0 to TR7)
Holding bits (HR area)		320 bits: HR 0000 to HR 1915 (Words HR 00 to HR19)
Auxiliary bits (AR area)		384 bits: AR 0000 to AR 2315 (Words AR 00 to AR23) These include the CompoBus/S slave status flags (AR 04 to 07).
Link bits (LR area)		256 points: LR 0000 to LR 1515 (Words LR 00 to LR 15)
Timers/Counters		256 timers/counters: TIM/CNT 000 to TIM/CNT 255 1-ms timers: TMHH 10-ms timers: TIMH 100-ms timers: TIM 1-s/10-s timers: TIML Decrementing counters: CNT Reversible counters: CNTR
Data memory	**Read/Write**	2,048 words (DM 0000 to DM 2047) The Error Log is contained in DM 2000 to DM 2021.
	Read-only	456 words (DM 6144 to DM 6599)
	PC Setup	56 words (DM 6600 to DM 6655)
DeviceNet slave functions		DeviceNet Remote I/O Link • Use up to 1,024 I/O points in the I/O Link. Explicit Message Communications • Any PC data area can be accessed from the master.
Basic interrupt functions	**Interrupt inputs**	2 interrupts (Used for both counter mode interrupt inputs and quick-response inputs.)
	Scheduled interrupts	1 interrupt
High-speed counter functions	**High-speed counters**	1 counter (20 kHz single-phase or 5 kHz 2-phase)
	Counter interrupts	1 interrupt (set value comparison or set-value range comparison)
	Interrupt inputs (counter mode)	2 interrupts (Used for both external interrupt inputs and quick-response inputs.)
	Count-up interrupts	2 interrupts (Used for both external interrupt inputs and quick-response inputs.)
Quick-response inputs		2 inputs (Used for both external interrupt inputs and counter mode interrupt inputs.) Min. input pulse width: 50 s max.
Pulse output		2 points without acceleration/deceleration, 10 Hz to 10 kHz each, and no direction control; 1 point with trapezoid acceleration/deceleration, 10 Hz to 10 kHz, and direction control; 2 points with variable duty-ratio outputs
Synchronized pulse control		1 point
Input time constant (ON response time = OFF response time)		Can be set for CPU inputs and Expansion Unit inputs only. (1 ms, 2 ms, 3 ms, 5 ms, 10 ms, 20 ms, 40 ms, or 80 ms)
Clock		Equipped with clock (built-in RTC)
Communications functions		Peripheral port: Supports Host Link, peripheral bus, no-protocol, or Programming Console connections. RS-232C port: Supports Host Link, no-protocol, 1:1 Link, or 1:1 NT Link connections.
Memory protection		HR area, AR area, program contents, DM area contents, and counter values maintained during power interruptions.
Memory backup		Non-volatile (flash) memory: Program, read-only DM area, and PC Setup
		Memory backup (lithium battery; 2-year lifetime): DM area, HR area, AR area, and counter values
Self-diagnostic functions		CPU errors (watchdog timer), memory errors, communications errors, setting errors, battery errors, and expansion I/O bus errors
Program checks		No END instruction, programming errors (checked when operation is started)
Programming Devices	**Programming Console**	C200H-PRO27
	CX-Programmer	Windows edition

✻ A Connecting Cable (CPM2C-CN111, CS1W-CN114, or CS1W-CN118) is required to connect to the communications (peripheral/RS-232C) port.

Communications Specifications

● DeviceNet

Item	Specifications
Communications protocol	Conforms to DeviceNet
Connection form ✻1	Combination of multi-drop method and T-branch connections (for trunk and drop lines)
Baud rate	500, 250, or 125 kbps
Communications media	Special 5-wire cable (2 signal lines, 2 power supply lines, 1 shield line) 4-wire Special Flat Cable (2 signal lines and 2 power lines)
Communications distance	• Using special 5-wire Flat Cable **Baud rate** / **Network length (max.)** / **Branch line length** / **Total branch line length** 500 kbps / 100 m max. ✻2 / 6 m max. / 39 m max. 250 kbps / 250 m max. ✻2 / 6 m max. / 78 m max. 125 kbps / 500 m max. ✻2 / 6 m max. / 156 m max. • Using special 4-wire Flat Cable **Baud rate** / **Network length (max.)** / **Branch line length** / **Total branch line length** 500 kbps / 75 m max. / 6 m max. / 35 m max. 250 kbps / 150 m max. / 6 m max. / 48 m max. 125 kbps / 265 m max. / 6 m max. / 135 m max.
Communications power supply	24 VDC is supplied externally.
Maximum number of nodes	64 (including Masters, Slaves, and the Configurator)

✻1. Terminating resistance is required at both ends of the trunk line.
✻2. This value applies when using Thick Cable for the trunk line.
If Thin Cable is used, the value will be 100 m max.

● CompoBus/S

Item		Specifications
Communications protocol		Special CompoBus/S protocol
Coding method		Manchester coding
Connection form		Multi-drop method and T-branch connections ✻1
Baud rate		High-speed Communications Mode: 750 kbps Long-distance Communications Mode: 93.75 kbps ✻2
Communications cycle time	**High-speed Communications Mode**	0.5 ms (with 8 input and 8 output slaves connected) 0.8 ms (with 16 input and 16 output slaves connected)
	Long-distance Communications Mode	4.0 ms (with 8 input and 8 output slaves connected) 6.0 ms (with 16 input and 16 output slaves connected)
Communications media		2-wire cable (VCTF 0.75 x 2), 4-wire cable (VCTF 0.75 x 4), or Special Flat Cable
Communications distance		• 2-wire VCTF cable **Communications mode** / **Main line length** / **Branch line length** / **Total branch line length** **High-speed Communications Mode** / 100 m max. / 3 m max. / 50 m max. **Long-distance Communications Mode** / 500 m max. / 6 m max. / 120 m max. • 4-wire VCTF cable or Special Flat Cable **Communications mode** / **Main line length** / **Branch line length** / **Total branch line length** **High-speed Communications Mode ✻3** / 30 m max. / 3 m max. / 30 m max. **Long-distance Communications Mode ✻4** / Free branching (up to a total cable length of 200 m)
Maximum number of nodes		32
Error control checks		Manchester code check, frame length check, and parity check

✻1. Connect external terminating resistance.
✻2. Switched using DM area setting. (Default setting: 750 kbps.)
✻3. If the number of slaves connected is 16 or less, the maximum main line length will be 100 m max., and the maximum total branch line length will be 50 m max.
✻4. There are no restrictions on the branching configuration, main line length, branch line length, or total branch line length. Connect external terminating resistance to the node farthest from the master.

Cables for I/O Connector

● Cables for Connector - Terminal Conversion Units

Cable	Connected product	Connector Products (Connector-Terminal Block Conversion Units) Connecting method
XW2Z-□□□A	**XW2R-J20G-T**	Phillips screw M3
	XW2R-E20G-T	Slotted screw M3
	XW2R-P20G-T	Push-in spring

Dimensions

(Unit: mm)

CPM2C-S100C-DRT
CPM2C-S110C-DRT

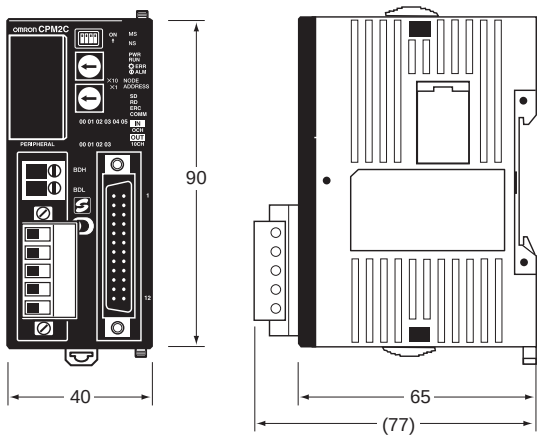

Intelligent Slaves

Digital Sensor Communications Unit 92
E3X-DRT21-S VER.3
DeviceNet ID Slave..... 94
V600-HAM42-DRT
DeviceNet ID Slave..... 95
V680-HAM42-DRT
DeviceNet-compliant Digital Indicators 96
K3HB-□-DRT
DeviceNet-compliant Digital Controllers 100
E5AR-DRT/E5ER-DRT
DeviceNet Communications Unit for Modular Temperature Controller..... 104
EJ1-DRT
Multi-function Compact Inverter MX2-Series V1 type DeviceNet Communication Unit 107
3G3AX-MX2-DRT-E
High-function General-purpose Inverters RX-Series V1 type DeviceNet Communication Unit .. 108
3G3AX-RX-DRT-E

Digital Sensor Communications Unit

E3X-DRT21-S VER.3

The DeviceNet Communication Unit That Simplifies Managing Sensor Settings

- ON/OFF signals and incident light levels can be sent to the host PLC without any need for programming (DeviceNet communications slave functionality).
- Threshold values and function settings can be read, written, or taught (using the Message Communications function).
- Simply connect the communication cables and slide the Amplifiers from the side for wire-saving.
- Up to 16 Sensor Amplifiers can be connected.

Ordering Information

● Digital Sensor Communications Unit

Name	Model
Digital Sensor Communications Unit	**E3X-DRT21-S VER.3**

● Wire-saving Connector

Type	Model
Cordless Slave Connector	**E3X-CN02**

Note: Order as many Connectors as the number of Sensors.

System Configuration

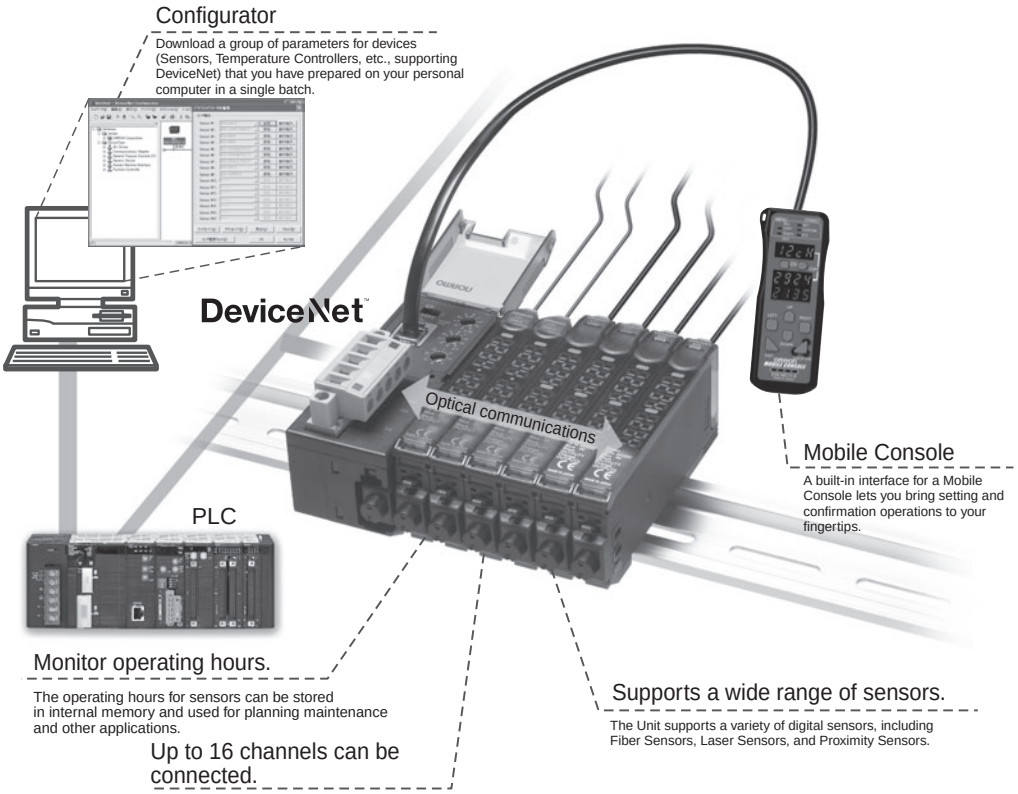

Ratings and Specifications

Item		Description
Communications method		DeviceNet communications
Communications functions	**Remote I/O Communications Slave function**	Monitors ON/OFF output, status, incident light level (digital display data)
	Message Communications function	Sets parameters using Explicit messages
	Configurator	Edits slave device parameters, enables device monitor functions
Mobile Console connection		E3X-MC11-SV2 can be connected
Power supply		Supplied from the DeviceNet communications connector (power is also supplied to all connected Sensors through Wire-reducing Connectors.)
Maximum connectable Sensors (See note 1.)		For remote I/O communications 1-CH mode (See note 2.) : 13 For remote I/O communications 2-CH mode (See note 3.) or for remote I/O communications 2-CH mode + detection level monitoring mode (See note 4.) : 16
Connectable Sensors (See note 5.)		E3X-DA-S Series or E3X-MDA Series Digital Fiber Sensor E3C-LDA Series Laser Photoelectric Sensor with Separate Digital Amplifier E2C-EDA High-resolution Digital Proximity Sensor with Separate Amplifier (use connector-type Amplifier Units and the E3X-CN02 Cordless Slave Connector)
Power supply voltage		11 to 25 VDC
Current consumption (See note 6.)		70 mA max.
Ambient operating temperature		-20°C to 55°C
Ambient operating humidity		35% to 85% (with no condensation)
Ambient storage temperature		-30°C to 70°C
Dimensions (mm)		30 x 34.6 x71.3 (W x H x D)
Weight (packed state)		Approx. 150 g

Note 1: When any of the following Sensors is connected, two words are allocated per Sensor and each Sensor is counted as two Sensors for the number of connected Sensors.
E3X-DA□-S (□: 7/9), E3X-DA□TW-S (□: 6/8), E3X-MDA□ (□: 6/8), E3C-LDA□ (□: 6/8), E2C-EDA□ (□: 6/8)
E3X-DA□-S (□: 7/9), E3X-DA□TW-S (□: 6/8) have been discontinued at the end of March 2017.
2: Communications is possible for the ON/OFF output data from 13 Units. One word is allocated as the input area in the Master.
3: Communications is possible for the ON/OFF output data from 16 Units and the number of connected Sensors. Two words are allocated as the output area in the Master.
4: Communications is possible for the ON/OFF output data from 16 Units, the number of connected Sensors, and the detection levels for the connected Sensors.
Two words are allocated as the input area and one word is allocated for the number of connected Sensors in the Master.
5: Connection cannot be performed if the response speed of the Sensor is set to super-high-speed mode.
6: This does not include the current supplied to the Sensor.

Dimensions

(Unit: mm)
Tolerance class IT16 applies to dimensions in this data sheet unless otherwise specified.

E3X-DRT21-S VER.3

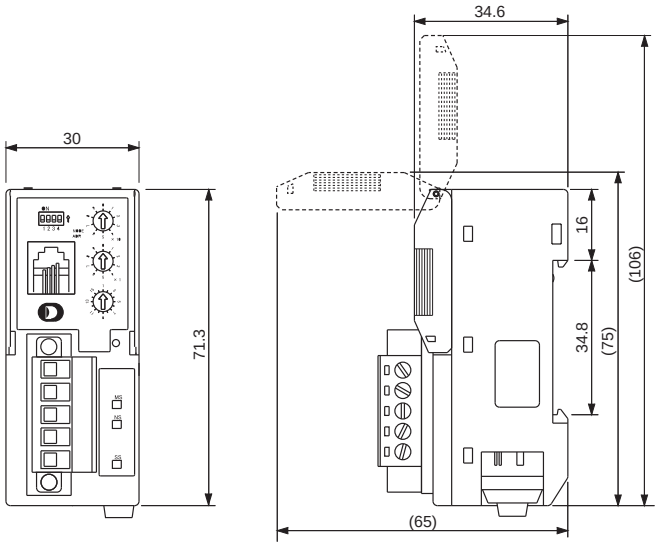

DeviceNet ID Slave

V600-HAM42-DRT

Electromagnetic-coupling ID System Conforms to DeviceNet and Saves Wiring Effort

- The world's first Intelligent Flag III with support for DeviceNet.
- Responds flexibly to applications with data reading up to 24 bits.
- Switch writing between units of 8 bits and 16 bits.
- Address to access can be set from master.

Ordering Information

Name	Model
Intelligent Flag III	**V600-HAM42-DRT**

General Specifications

Item / Model	V600-HAM42-DRT
Communications power supply voltage	11 to 25 VDC
Internal circuit power supply voltage	18 to 26.4 VDC (24 VDC -25%/+10%)
Internal current consumption current	Communications power supply: 40 mA max. Internal circuitry power supply: 150 mA max.
Number of words allocated to Master	Inputs: 2 words, Outputs: 2 words
Noise immunity	Internal circuitry power supply normal: ±600 V Internal circuitry power supply common: ±1.5 kV
Vibration resistance	10 to 55 Hz, 1.5-mm double amplitude
Shock resistance	Malfunction: 200 m/s² Destruction: 300 m/s²
Dielectric strength	500 VAC for 1 min between insulated circuits
Ambient operating temperature	0°C to 55°C
Ambient operating humidity	35% to 85% (with no condensation)
Ambient operating atmosphere	With no corrosive gas
Ambient storage temperature	-25°C to 65°C
Dimensions	65 x 65 x 60 mm
Construction	Panel-mounting

Item / Model	V600-HAM42-DRT
Mounting method	DIN track mounting or M4 screw mounting with provided brackets.
Weight	150 g max.

Performance Specifications

Item	Specifications
Number of sensor connections	One channel
Applicable sensors	V600-HS51, V600-HS61, V600-HS53, V600-HS67
Data Carrier communications range	Read: 24 bits of data from the set address Write: 16 bits of data from the set address

System Configuration

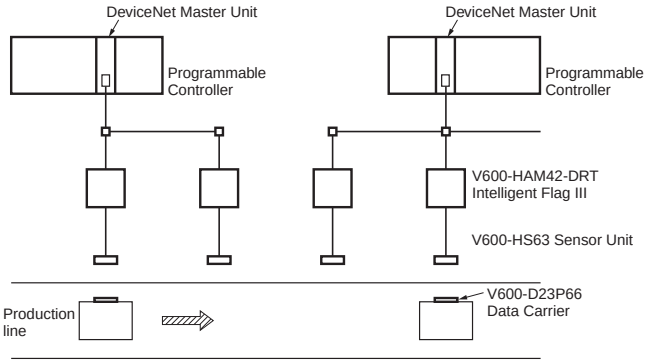

Dimensions

(Unit: mm)

V600-HAM42-DRT

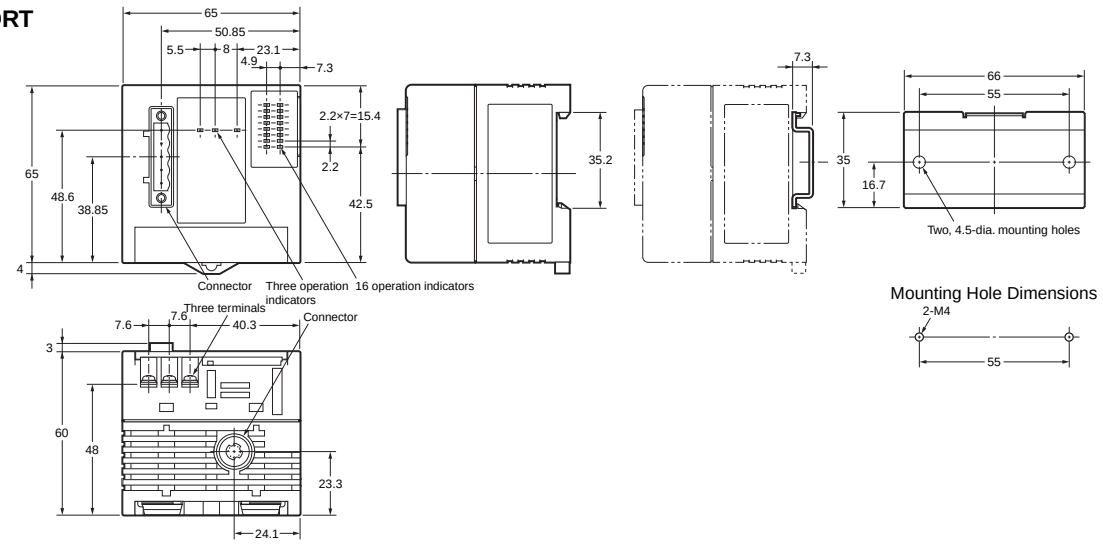

DeviceNet ID Slave

V680-HAM42-DRT

DeviceNet-compliant ID System for Reduced Wiring

- Read and write up to 58 bytes.
- Addresses to access can be set from the Master.

Ordering Information

Name	Model
DeviceNet ID Slave	**V680-HAM42-DRT**

General Specifications

Item / Model	V680-HAM42-DRT
Power supply voltage	24 VDC (-15% to 10%) including 10% ripple (p-p)
Power consumption	4 W max. (Current consumption of 200 mA max. at power supply voltage of 24 VDC)
Ambient operating temperature	-10°C to 55°C (with no icing)
Ambient storage temperature	25°C to 65°C (with no icing)
Ambient operating humidity	25% to 85% (with no condensation; ambient operating temperature is 40°C max. at humidity of 85%)
Insulation resistance	20 MΩ min. (at 500 VDC) between all terminals excluding the ground terminal and the case
Dielectric strength	1,000 VAC (50/60 Hz) for 1 minute between all terminals excluding the ground terminal and the case
Vibration resistance	10 to 150 Hz, 0.2-mm double amplitude at 15 m/s^2 acceleration with 10 sweeps in X, Y and Z directions for 8 minutes each
Shock resistance	150 m/s^2 in X, Y, and Z directions 3 times each (18 times in total)
Dimensions	65 x 65 x 65 mm (excluding protrusions)
Degree of protection	IP20 (IEC 60529)

Item / Model	V680-HAM42-DRT
Materials	Polycarbonate (PC) resin, ABS resin
Weight	Approx. 150 g
Mounting method	DIN track mounting

Performance Specifications

Item	Specifications
No. of connectable antennas	One channel
Connectable Antennas	V680-HS51,V680-HS52, V680-HS63, V680-HS65

System Configuration

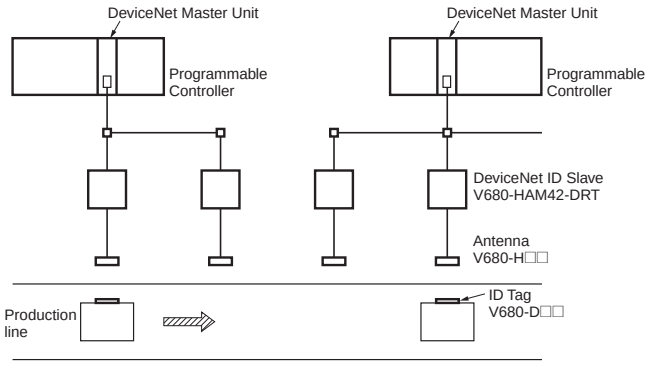

Dimensions

(Unit: mm)

V680-HAM42-DRT

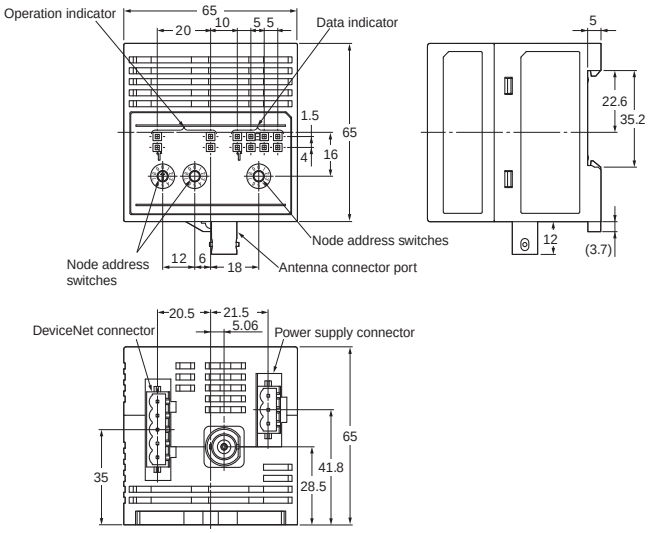

DeviceNet-compliant Digital Indicators

K3HB-□-DRT

Digital Indicators Ideal for Measurement Displays and Judgment of Analog Levels, Such as Voltage Signals, Current Signals, and Temperatures

- High-precision, high-speed sampling.
- Measurement resolution of 0.01°C and sampling of 50 times per second.
- High-visibility negative-transmissive LCD with bright backlight.
- Present values and deviations are displayed using a bar graph.
- Compliant with CE and UL standards as well as RoHS.

Ordering Information

Name	Appearance	Specifications	Model
DeviceNet-compliant Digital Indicators		Process Indicator	K3HB-XVD-A-DRT1
			K3HB-XAD-A-DRT1
			K3HB-XVA-DRT1
			K3HB-XAA-DRT1
		Weighing Indicator	K3HB-VLC-B-DRT1
			K3HB-VLC-E-DRT1
		Temperature Indicator	K3HB-HTA-DRT1
		Linear Sensor Indicators	K3HB-SSD-A-DRT1
		Rotary Pulse Indicator	K3HB-RNB-A-DRT1
		Timer Interval Indicator	K3HB-PNB-A-DRT1
		Up/Down Counting Pulse Indicator	K3HB-CNB-A-DRT1

Ratings

● K3HB-X/V/H/S

Power supply voltage		100 to 240 VAC Models 100 to 240 VAC (50/60 Hz) DeviceNet power supply: 24 VDC	
Allowable power supply voltage range		85% to 110% of the rated power supply voltage	
Power consumption		100 to 240 VAC Models: 18 VA max., 24 VAC/VDC Models: 11 VA, 7 W max.	
Absolute maximum rated input	**S Model**	0 to 5V	±10V
		1 to 5V	±10V
		±5 V	±10V
		±10 V	±14.5V
		0 to 20 mA	31 mA
		4 to 20 mA	31 mA
	XVD Model	±199.99 V	Allowable instantaneous overload (30 s): ±400 V
		±19.999 V	Allowable instantaneous overload (30 s): ±200 V
		±1.9999 V	Allowable instantaneous overload (30 s): ±200 V
		1.0000 to 5.0000V	Allowable instantaneous overload (30 s): ±200 V
	XVA Model	0.0 to 400.0 V	Allowable instantaneous overload (30 s): 700 V
		0.00 to 199.99 V	Allowable instantaneous overload (30 s): 700 V
		0.000 to 19.999 V	Allowable instantaneous overload (30 s): 400 V
		0.0000 to 1.9999 V	Allowable instantaneous overload (30 s): 400 V
	XAD Model	±199.99 mA	Allowable instantaneous overload (30 s): ±400 V
		±19.999 mA	Allowable instantaneous overload (30 s): ±200 V
		±1.9999 mA	Allowable instantaneous overload (30 s): ±200 V
		4.000 to 20.000 mA	Allowable instantaneous overload (30 s): ±200 V
	XAA Model	0.000 to 10.000 A	Allowable instantaneous overload (30 s): 20 A
		0.0000 to 1.9999 A	Allowable instantaneous overload (30 s): 20 A
		0.00 to 199.99 mA	Allowable instantaneous overload (30 s): 2 A
		0.000 to 19.999 mA	Allowable instantaneous overload (30 s): 2 A
	V Model	0.00 to 199.99 mV	Allowable instantaneous overload (30 s): ±200 V
		0.000 to 19.999 mV	Allowable instantaneous overload (30 s): ±200 V
		±100.00 mV	Allowable instantaneous overload (30 s): ±200 V
		±199.99 mV	Allowable instantaneous overload (30 s): ±200 V
External power supply		12 VDC ±10%, 80 mA (only for models with external power supplies) 10 VDC ±5%, 100 mA (only for models with external power supplies) 5 VDC ±5%, 100 mA (only for models with external power supplies)	
Input range (measurement range)	**S Model**	DC voltages or currents (0 to 20 mA, 4 to 20 mA, 0 to 5 V, 1 to 5 V, ±5 V, ±10 V), 2 channels	
	X Model (measurement category II)	DC voltage: ±199.99 V, ±19.999 V, ±1.999 V, 1.000 to 5.000 V DC current: ±199.99 mA, ±19.999 mA, ±1.999 mA, 4.000 to 20.000 mA AC voltage: 0.0 to 400.0 V, 0.00 to 199.99 V, 0.000 to 19.999 V, 0.000 to 1.9999 V AC current: 0.000 to 10.000 A, 0.0000 to 1.9999 A, 0.00 to 199.99 mA, 0.000 to 19.999 mA	
	V Model	Load cell: 0.00 to 199.99 mV, 0.000 to 19.999 mV, ±100.00 mV, ±199.99 mV	
Input impedance	**S Model**	Current range: 120 Ω max., Voltage range: 1 MΩ max.	
	X Model	DC voltage (±199.99 V): 10 MΩ min./DC voltage (other ranges): 1 MΩ min. DC current (±199.99 mA): 1 Ω max./(±19.999 mA and 4 to 20 mA): 10 Ω max./(±1.9999 mA): 33 Ω max. AC voltage: 1 MΩ min., DC current (0 to 10 A and 0 to 1.9999 A): 0.5 VAC/(0 to 199.99 mA): 1 Ω max./(0 to 19.999 mA): 10 Ω max.	
	V Model	Load cell: 1 MΩ min.	
Event inputs	**Timing input**	NPN open collector or no-voltage contact signal ON residual voltage: 3 V max. ON current at 0 Ω: 17 mA max. Max. applied voltage: 30 VDC max. OFF leakage current: 1.5 mA max.	
	Startup compensation timer input	NPN open collector or no-voltage contact signal ON residual voltage: 2 V max. ON current at 0 Ω: 4 mA max. Max. applied voltage: 30 VDC max. OFF leakage current: 0.1 mA max.	
	Hold input		
	Reset input		
	Forced-zero input		
	Bank input		
A/D conversion method	**S Model**	Sequential comparison system	
	H/X/V Model	Digital-sigma method	
Output ratings	**Relay output**	250 VAC, 30 VDC, 5 A (resistive load) Mechanical life expectancy: 5,000,000 operations, Electrical life expectancy: 100,000 operations	
	Transistor output	Maximum load voltage: 24 VDC, Maximum load current: 50 mA, Leakage current: 100 μA max.	
	Linear output	Linear output 0 to 20 mA DC, 4 to 20 mA: Load: 500 Ω max, Resolution: Approx. 10,000, Output error: ±0.5% FS Linear output 0 to 5 VDC, 1 to 5 VDC, 0 to 10 VDC: Load: 5 kΩ max, Resolution: Approx. 10,000, Output error: ±0.5% FS (1 V or less: ±0.15 V; not output for 0 V or less)	
Display method		Negative LCD (backlit LED) display, 7-segment digital display (character heights: PV: 14.2 mm (switches between green and red), SV: 4.9 mm (green))	
Ambient operating temperature		-10°C to 55°C (with no icing or condensation)	
Ambient operating humidity		25% to 85%	
Storage temperature		-25°C to 65°C (with no icing or condensation)	
Altitude		2,000 m max.	
Accessories		2 fixtures, unit stickers, instruction manual. watertight packing, terminal cover, DeviceNet connector ✻ and crimp terminals (Hirose HR31-SC-121) ✻	

✻ DeviceNet only.

● **K3HB-R/P/C**

Power supply voltage		100 to 240 VAC Models 24 VAC/VDC Models DeviceNet power supply: 24 VDC
Allowable power supply voltage range		85% to 110% of the rated power supply voltage, DeviceNet power supply: 11 to 25 VDC
Power consumption (under maximum load) ✻1		100 to 240 VAC: 18 VA max., 24 VAC/VDC: 11 VA/7 W max.
Current consumption		DeviceNet power supply: 50 mA max. (24 VDC)
Inputs		No-voltage contact, voltage pulse, and open collector
External power supply		12 VDC ±10%, 80 mA (only for models with external power supplies) 10 VDC ±5%, 100 mA (only for models with external power supplies)
Event inputs ✻2, ✻4	**Startup compensation timer input**	NPN open collector or no-voltage contact signal ON residual voltage: 2 V max. ON current at 0 Ω: 4 mA max. Max. applied voltage: 30 VDC max. OFF leakage current: 0.15 mA max.
	Hold input	
	Reset input	
	Compensation input	
	Bank input	
Outputs ✻4	**Relay output**	250 VAC, 30 VDC, 5 A (resistive load) Mechanical life expectancy: 5,000,000 operations, Electrical life expectancy: 100,000 operations
	Transistor output	Maximum load voltage: 24 VDC, Maximum load current: 50 mA, Leakage current: 100 μA max.
	Linear output	Linear output 0 to 20 mA DC, 4 to 20 mA: Load: 500 Ω max, Resolution: Approx. 10,000, Output error: ±0.5% FS Linear output 0 to 5 VDC, 1 to 5 VDC, 0 to 10 VDC: Load: 5 kΩ max, Resolution: Approx. 10,000, Output error: ±0.5% FS (1 V or less: ±0.15 V; not output for 0 V or less)
Display method		Negative LCD (backlit LED) display, 7-segment digital display (character heights: PV: 14.2 mm (switches between green and red), SV: 4.9 mm (green))
Main functions ✻4		Scaling, measurement operation selection, averaging, previous average value comparison, output hysteresis, output ON delay, output test, teaching, display selection, display color switching, key protection, bank selection, display refresh period, maximum/minimum hold, and reset
Ambient operating temperature		-10°C to 55°C (with no icing or condensation)
Ambient operating humidity		25% to 85%
Storage temperature		-25°C to 65°C (with no icing or condensation)
Altitude		2,000 m max.
Accessories		Watertight packing, 2 fixtures, terminal cover, unit stickers, instruction manual. DeviceNet models also include a DeviceNet connector (Hirose HR31-5.08P-5SC(01)) and crimp terminals (Hirose HR31-SC-121) **✻3**

✻1. DC power supply models require a control power supply capacity of approximately 1 A per Unit when power is turned ON. Particular attention is required when using two or more DC power supply models. The OMRON S8VS-series DC Power Supply Unit is recommended.
✻2. PNP input types are also available.
✻3. For K3HB-series DeviceNet models, use only the DeviceNet Connector included with the product. The crimp terminals provided are for Thin Cables.
✻4. Depends on the model.

DeviceNet Communications Specifications

Communications protocol		Conforms to DeviceNet
Supported communications	**Remote I/O communications**	• Master-Slave connection (polling, bit-strobe, COS, cyclic) • Conforms to DeviceNet communications standards.
	I/O allocations	• Allocate any I/O data using the Configurator. • Allocate any data, such as DeviceNet-specific parameters and variable area for Digital Indicators. • Input area: 2 blocks, 100 words max. • Output area: 1 block, 100 words max. (The first word in the area is always allocated for the Output Execution Enabled Flags.)
	Message communications	• Explicit message communications • CompoWay/F communications commands can be executed (using explicit message communications)
Connection form		Combination of multi-drop method and T-branch connections (for trunk and drop lines)
Baud rate		DeviceNet: 500, 250, or 125 kbps (automatic follow-up)
Communications media		Special 5-wire cable (2 signal lines, 2 power supply lines, 1 shield line)
Communications distance		**Baud rate** / **Network length (max.)** / **Branch line length** / **Total branch line length** 500 kbps / 100 m max. (100 m max.) / 6 m max. / 39 m max. 250 kbps / 250 m max. (100 m max.) / 6 m max. / 78 m max. 125 kbps / 500 m max. (100 m max.) / 6 m max. / 156 m max. The values in parentheses are for Thin Cable.
Power supply voltage		24-VDC DeviceNet power supply
Allowable power supply voltage range		11 to 25-VDC DeviceNet power supply
Current consumption		50 mA max. (24 VDC)
Maximum number of nodes		64 (DeviceNet Configurator is counted as one node when connected)
Maximum number of slaves		63
Error control checks		CRC errors
DeviceNet power supply		Supplied from DeviceNet communications connector
Current consumption		50 mA max. (24 VDC)
Maximum I/O points		Maximum number of slaves: 63

Dimensions

(Unit: mm)

K3HB

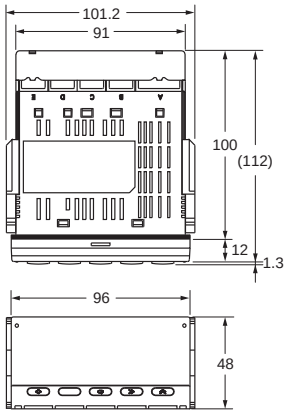

Character Size for Main Display

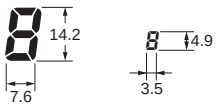

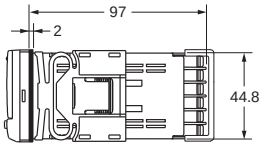

Panel Cutout Dimensions

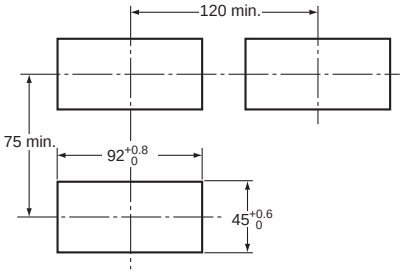

Terminal Arrangement

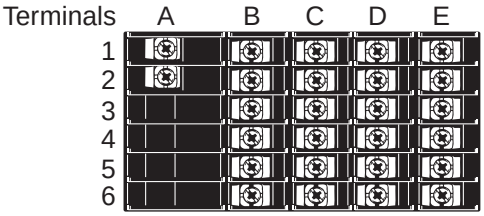

A — Operating Power Supply

100 to 240 VAC
24 VAC/DC

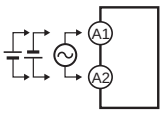

* Check the required power supply type.

B — Sensor Power Supply/Outputs

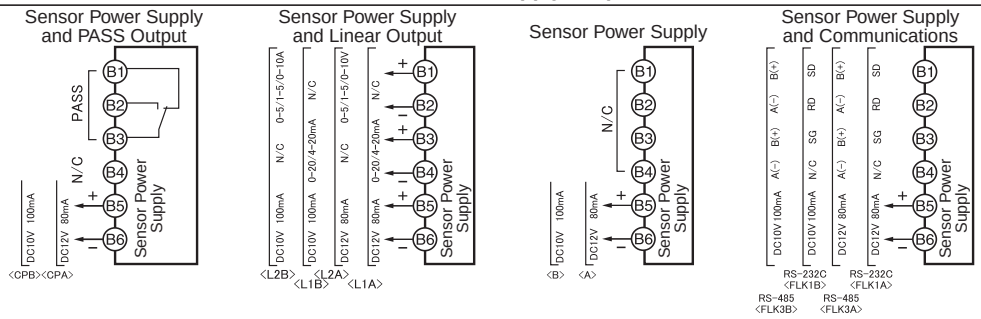

C — Relay, Transistor, BCD, and DeviceNet

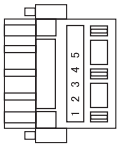

1: V – (power supply wire: black)
2: CAN L (communications wire: blue)
3: Shield
4: CAN H (communications wire: white)
5: V+ (power supply wire: red)
Applicable connector:
HR31-5.08P-5SC (01) (Hirose Electric)
Note: Attach the enclosed crimp terminals.

D — Event Inputs

Models with Terminal Blocks
<1><3>

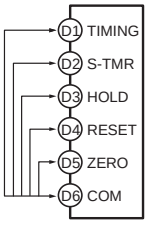

Models with Connectors
<2><4>

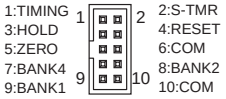

Applicable connector (order separately):
XG4M-1030 (OMRON)
Special cable (order separately):
K32-DICN (OMRON)
(XG4M-1030 with 3-m Cable)

E — Analog Inputs

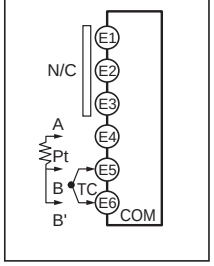

(K3HB-H)

E — Analog Inputs

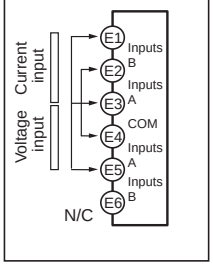

(K3HB-S)

E — Analog Inputs

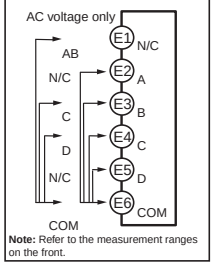

(K3HB-X, V)

DeviceNet-compliant Digital Controllers

E5AR-DRT/E5ER-DRT

General-purpose Digital Controllers with High Speed and High Accuracy. Three, 5-digit Easy-to-read Tall LCD Displays.

- High-speed sampling cycle (50 ms) for applications requiring high-speed response.
- Three backlit, negative LCD displays for simultaneous display of PV, SV, and MV.
- Multipoint control, cascade control, and proportional control all possible with a single Controller.
- Data processing functions provided as standard features: Square root extraction, linear approximation, and more.
- DeviceNet communications for data setting and monitoring without special programming.

Ordering Information

■ Digital Controllers

● E5AR DeviceNet-compliant Models

Size	Type	Control modes	No. of outputs (control/transfer)	Optional features			Model
				No. of auxiliary outputs (SUB)	No. of event inputs	Communications	
96 x 96 mm	Basic Type (1 input)	Standard control Heating/cooling control	2 (pulse voltage + pulse voltage/current outputs)	4	2	DeviceNet	**E5AR-Q4B-DRT**
			2 (2 current outputs)				**E5AR-C4B-DRT**
			4 (1 pulse voltage + 1 pulse voltage/current + 2 current outputs)				**E5AR-QC4B-DRT**
	2-input Type	2-channel standard control 2-channel heating/cooling control 1-channel cascade control 1-channel control with remote SP 1-channel ratio control	4 (2 pulse voltage + 2 pulse voltage/current)	4	None	DeviceNet	**E5AR-QQ4W-DRT**
	4-input Type	4-channel standard control 2-channel heating/cooling control	4 (4 current outputs)	4	None	DeviceNet	**E5AR-CC4WW-DRT**
	Control Valve Control Type (1 input)	1-channel position proportional control ✻	Relay outputs (1 open and 1 closed)	4	None	DeviceNet	**E5AR-PR4F-DRT**
			Relay outputs (1 open and 1 closed) + 1 current (transfer)				**E5AR-PRQ4F-DRT**

Note: When ordering, specify the power supply. Different models are used for 100 to 240 VAC and 24 VDC/AC.
✻ Control can be switched between closed control and floating control.

● E5ER DeviceNet-compliant Models

Size	Type	Control modes	No. of outputs (control/transfer)	Optional features			Model
				No. of auxiliary outputs (SUB)	No. of event inputs	Communications	
48 x 96 mm	Basic Type (1 input)	Standard control Heating/cooling control	2 (pulse voltage + pulse voltage/ current outputs)	2 ✻1	2	DeviceNet	**E5ER-QTB-DRT**
			2 (2 current outputs)				**E5ER-CTB-DRT**
	2-input Type	2-channel standard control 1-channel heating/cooling control 1-channel cascade control 1-channel control with remote SP 1-channel ratio control	2 (pulse voltage + pulse voltage/ current outputs)	2 ✻1	None	DeviceNet	**E5ER-QTW-DRT**
			2 (2 current outputs)				**E5ER-CTW-DRT**
	Control Valve Control Type (1 input)	1-channel position proportional control ✻2	Relay outputs (1 open and 1 closed)	2 ✻1	None	DeviceNet	**E5ER-PRTF-DRT**

Note: When ordering, specify the power supply. Different models are used for 100 to 240 VAC and 24 VDC/AC.
✻1. Transistor outputs.
✻2. Control can be switched between closed control and floating control.

Inspection Results

Order using the following model number together with the model number of the Digital Controller to obtain inspection results.

Inspection Results (Sold Separately)

Model
E5AR-K
E5ER-K

■ Optional Accessories (Sold separately)

● Terminal Cover

Digital Controller	Model
E5AR	**E53-COV14**
E5ER	**E53-COV15**

Specifications

● E5AR

Item ✻1 Power supply voltage		100 to 240 VAC, 50/60 Hz	24 VAC, 50/60 Hz or 24 VDC
Allowed voltage variance range		85% to 110% of power supply voltage	
Power consumption		22 VA max. (under maximum load)	15 VA/10 W max. (under maximum load)
Sensor input ✻2		Thermocouples: K, J, T, E, L, U, N, R, S, B, W Platinum resistance temperature input sensors: Pt100 Current inputs: 4 to 20 mA DC, 0 to 20 mA DC (including remote SP input) Voltage inputs: 1 to 5 VDC, 0 to 5 VDC, 0 to 10 VDC (including remote SP input) (Input impedance: 150 Ω using current input, approx. 1 MΩ using voltage input)	
Control output	**Voltage (pulse) output**	12 V DC, 40 mA max., with short-circuit protection circuit	
	Current output	0 to 20 mA DC/4 to 20 mA DC, 500 Ω load max. (including transfer output) (Resolution: Approx. 54,000 at 0 to 20 mA DC, approx. 43,000 at 4 to 20 mA DC)	
	Relay output	Position proportional control type (open, closed) NO-SPST 250 VAC 1 A (including inrush current)	
Auxiliary output		NO-SPST 250 V AC 1 A (resistive load)	
Potentiometer input		100 Ω to 2.5 kΩ	
Event input	**Contact**	Input ON: 1 kΩ max., OFF: 100 kΩ max.	
	Non-contact	Input ON: Residual voltage 1.5 V max., OFF: Leakage current 0.1 mA max.	
		Short-circuit current: Approx. 4 mA	
Remote SP input		See *Sensor inputs*.	
Transfer output		See *Control outputs*.	
Control method		Advanced PID or ON/OFF	
Setting method		Digital setting by front panel keys, setting by serial communications	
Indication method		7-segment digital display and LED indicators Character heights: PV 12.8 mm, SV 7.7 mm, MV 7.7 mm	
Other functions		Varies by model	
Ambient operating temperature		-10°C to 55°C (no condensation or icing), 3 year warranty: -10°C to 55°C (no condensation or icing)	
Ambient operating humidity		25% to 85%	
Storage temperature		-25°C to 65°C (no condensation or icing)	

Note: Do not use the output from an Inverter for the power supply.
✻1. When ordering, specify the power supply. Different models are used for 100 to 240 VAC and 24 VDC/AC.
✻2. Multi-input. Switch between temperature and analog input using the input type switch.
Basic insulation is provided between the power supply and input terminals and between the power supply and output terminals.

● **E5ER**

Item ✱1 Power supply voltage		100 to 240 VAC, 50/60 Hz	24 VAC, 50/60 Hz or 24 VDC
Allowed voltage variance range		85% to 110% of power supply voltage	
Power consumption		17 VA max. (under maximum load)	11 VA/7 W max. (under maximum load)
Sensor input ✱2		Thermocouples: K, J, T, E, L, U, N, R, S, B, W Platinum resistance temperature input sensors: Pt100 Current inputs: 4 to 20 mA DC, 0 to 20 mA DC (including remote SP input) Voltage inputs: 1 to 5 VDC, 0 to 5 VDC, 0 to 10 VDC (including remote SP input) (Input impedance: 150 Ω using current input, approx. 1 MΩ using voltage input)	
Control output	**Voltage (pulse) output**	12 V DC, 40 mA max., with short-circuit protection circuit	
	Current output	0 to 20 mA DC/4 to 20 mA DC, 500 Ω load max. (including transfer output) (Resolution: Approx. 54,000 at 0 to 20 mA DC, approx. 43,000 at 4 to 20 mA DC)	
	Relay output	Position proportional control type (open, closed) NO-SPST 250 VAC 1 A (including inrush current)	
Auxiliary output		Transistor outputs, Maximum load voltage: 30 VDC, maximum load current: 50 mA Residual voltage: 1.5 V max., leakage current: 0.4 mA max.	
Potentiometer input		100 Ω to 2.5 kΩ	
Event input	**Contact**	Input ON: 1 kΩ max., OFF: 100 kΩ max.	
	Non-contact	Input ON: Residual voltage 1.5 V max., OFF: Leakage current 0.1 mA max.	
		Short-circuit current: Approx. 4 mA	
Remote SP input		See *Sensor inputs*.	
Transfer output		See *Control outputs*.	
Control method		Control method Advanced PID or ON/OFF	
Setting method		Digital setting by front panel keys, setting by communications	
Indication method		7-segment digital display and LED indicators Character heights: PV 9.5 mm, SV 7.2 mm, MV 7.2 mm	
Other functions		Varies by model	
Ambient operating temperature		-10°C to 55°C (no condensation or icing), 3 year warranty: -10°C to 50°C (no condensation or icing)	
Ambient operating humidity		25% to 85%	
Storage temperature		-25°C to 65°C (no condensation or icing)	

Note: Do not use the output from an Inverter for the power supply.
✱1. When ordering, specify the power supply. Different models are used for 100 to 240 VAC and 24 VDC/AC.
✱2. Multi-input. Switch between temperature and analog input using the input type switch.
Basic insulation is provided between the power supply and input terminals and between the power supply and output terminals.

DeviceNet Communications Specifications

Communications protocol		Conforms to DeviceNet
Communi-cations functions	**Remote I/O communi-cations**	• Master-Slave connection (polling, bit-strobe, COS, cyclic) • Conforms to DeviceNet communications standards.
	I/O allocations	• Allocate any I/O data using the Configurator. • Allocate any data, such parameters specific to the DeviceNet and the Digital Indicator variable area. • Input area: 2 blocks, 100 words max. • Output area: 1 block, 100 words max. (The first word in the area is always allocated for the Output Execution Enabled Flags.)
	Message Communi-cations function	• Explicit message communications • CompoWay/F communications commands can be sent (commands are sent as explicit messages).
Connection form		Combination of multi-drop method and T-branch connections (for trunk and drop lines)
Baud rate		DeviceNet: 500, 250, or 125 kbps (automatic follow-up)
Communications media		Special 5-wire cable (2 signal lines, 2 power supply lines, 1 shield line)

Communications distance	<table><tr><th>Baud rate</th><th>Network length (max.)</th><th>Branch line length</th><th>Total branch line length</th></tr><tr><td>500 kbps</td><td>100 m max. (100 m max.)</td><td>6 m max.</td><td>39 m max.</td></tr><tr><td>250 kbps</td><td>250 m max. (100 m max.)</td><td>6 m max.</td><td>78 m max.</td></tr><tr><td>125 kbps</td><td>500 m max. (100 m max.)</td><td>6 m max.</td><td>156 m max.</td></tr></table>The values in parentheses are for Thin Cable.
Power supply voltage	DeviceNet power supply: 24 VDC (internal circuit)
Allowable power supply voltage range	DeviceNet power supply: 11 to 25 VDC
Current consumption	50 mA max. (24 VDC)
Maximum number of nodes	64 (DeviceNet Configurator is counted as one node when connected)
Maximum number of slaves	63
Error control checks	CRC errors
DeviceNet power supply	Supplied from DeviceNet communications connector

Dimensions

(Unit: mm)

■ Digital Controllers

E5AR

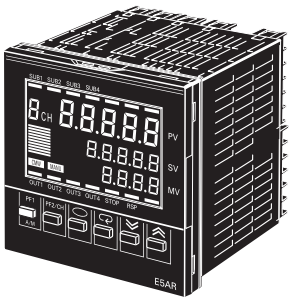

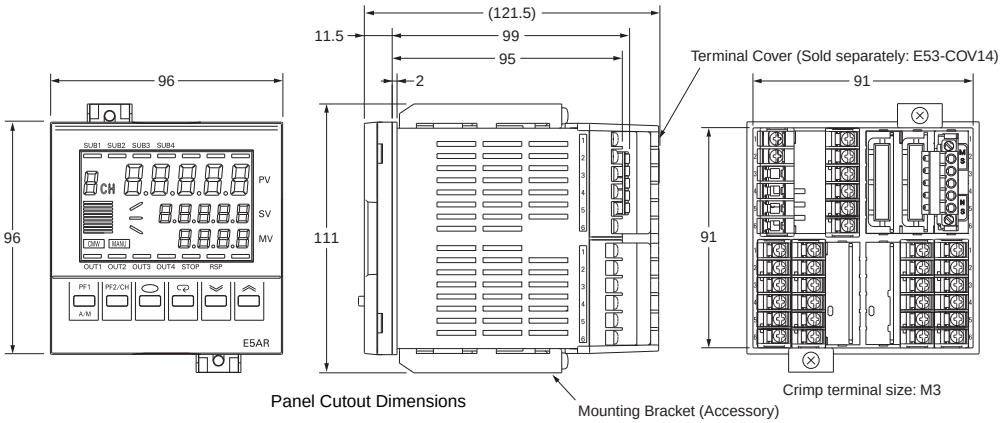

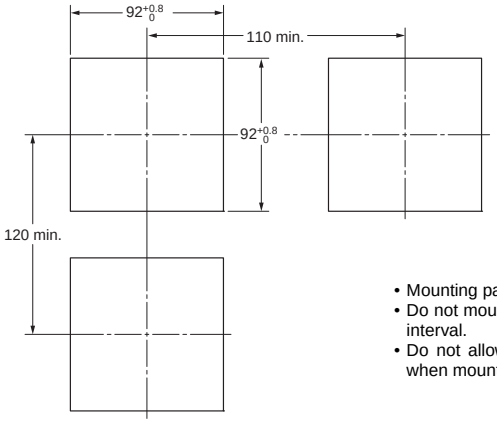

- Mounting panel thickness: 1 to 8 mm
- Do not mount Controllers side-to-side. Maintain the installation interval.
- Do not allow the rated ambient temperature to be exceeded when mounting more than one Controller.

E5ER

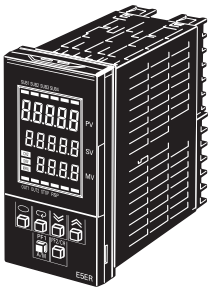

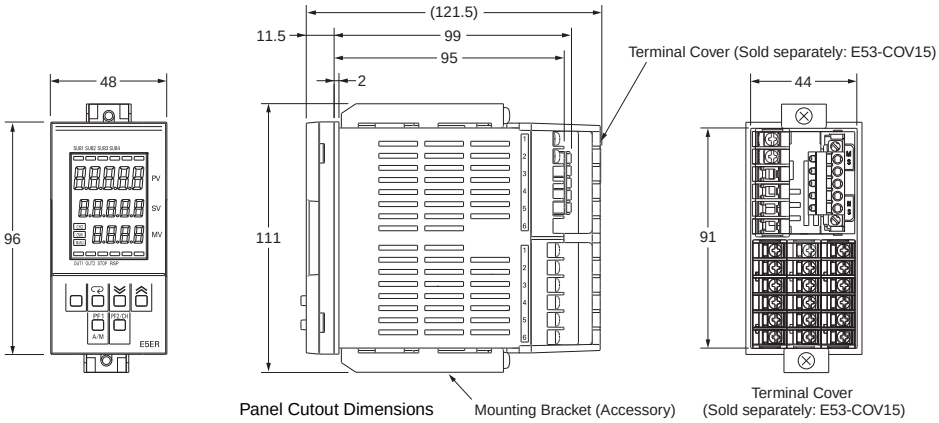

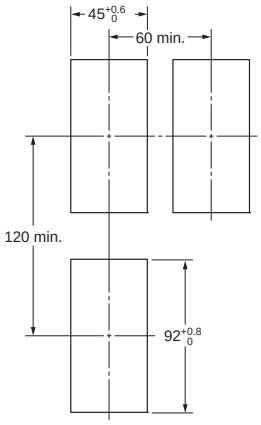

- Mounting panel thickness: 1 to 8 mm
- Do not mount Controllers side-to-side. Maintain the installation interval.
- Do not allow the rated ambient temperature to be exceeded when mounting more than one Controller.

DeviceNet Communications Unit for Modular Temperature Controller

EJ1-DRT

Easily Perform Temperature Control for Multiple Channels.

- Up to 16 Temperature Controllers can be connected to a single DeviceNet Communications Unit.
- Sharing target values and present values using remote I/O communications without special programming reduces development work for communications.
- Flexibly allocate I/O memory using either fixed allocation addresses for simple allocations or user-set allocations from the Configurator.
- The EJ1 parameters can be backed up for easy resetting of parameters when the EJ1 is replaced.
- Explicit messages be sent from the PLC to easily read or write any parameter.

Ordering Information

● DeviceNet Communications Unit

Name	Specifications	Model	Safety standards
HFU (DeviceNet communications) ✻1	External input power supply voltage: 24 VDC	**EJ1N-HFUB-DRT**	UC, CE

● Modular Temperature Controller

Unit Name	Power supply voltage	No. of control points	Control outputs 1 and 2	Control outputs 3 and 4	Auxiliary output	Functions: Heater burnout alarm	Functions: Event inputs	Communications functions	Input type	Terminal	Model
Basic Unit (temperature control) ✻1	24 VDC supplied from the End Unit	2	Voltage output: 2 points (for SSR drive) ✻2	Transistor output: 2 points (sinking)	None	2 ✻3	2	G3ZA connection port: RS-485 From End Unit: Port A or port B: RS-485	Thermocouple, platinum resistance thermometer, analog voltage, and analog current selectable for each channel.	M3 terminal	**EJ1N-TC2A-QNHB**
										Screw-less clamp	**EJ1N-TC2B-QNHB**
		4		Voltage output: 2 points (for SSR drive) ✻2		None	None			M3 terminal	**EJ1N-TC4A-QQ**
										Screw-less clamp	**EJ1N-TC4B-QQ**
		2	Current output: 2 points	Transistor output: 2 points (sinking)			2			M3 terminal	**EJ1N-TC2A-CNB**
										Screw-less clamp	**EJ1N-TC2B-CNB**
HFU with Programless Communications ✻1		None	None	None	Transistor output: 4 points (sinking)	None	4	Port C: RS-485 or RS-232C selectable. From End Unit: Port A: RS-485	No input	M3 terminal	**EJ1N-HFUA-NFLK**
										Screw-less clamp	**EJ1N-HFUB-NFLK**
								Port C: RS-422 From End Unit: Port A: RS-485		M3 terminal	**EJ1N-HFUA-NFL2**
										Screw-less clamp	**EJ1N-HFUB-NFL2**
End Unit ✻1	24 VDC				Transistor output: 2 points (sinking)		None	Port A or B: RS-485 Connector: Port A		M3 terminal	**EJ1C-EDUA-NFLK**
										Detachable connector	**EJ1C-EDUC-NFLK**

✻1. An End Unit is always required for connection to a Basic Unit or an HFU. An HFU cannot operate without a Basic Unit. External communications cannot be performed when using a Basic Unit only.
✻2. For heating/cooling control applications, control outputs 3 and 4 on the 2-point models are used for the cooling or heating control outputs. On the 4-point models, heating/cooling control is performed for the two input points.
✻3. When using the heater burnout alarm, purchase a Current Transformer (E54-CT1 or E54-CT3) separately.

System Configuration

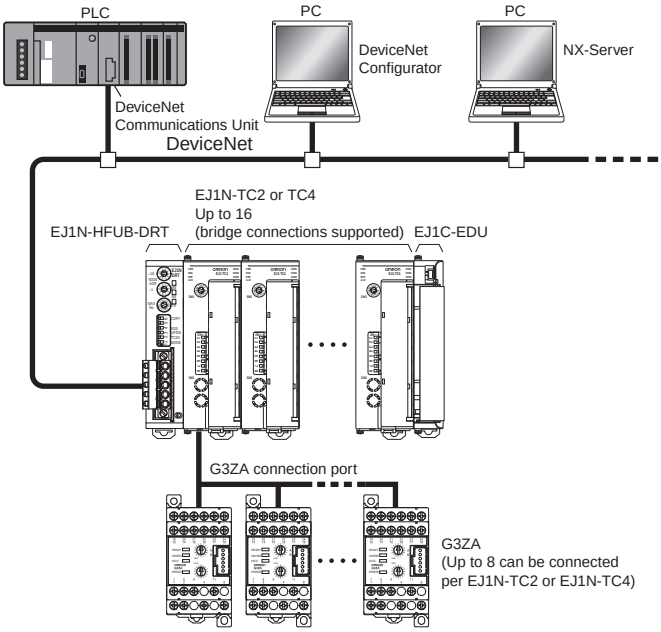

Specifications

Power supply voltage	**DeviceNet power supply**	24 VDC (for internal circuits)
	EDU power supply	24 VDC (for RS-485 communications circuits and Temperature Controllers)
Allowable voltage range	**DeviceNet power supply**	11 to 25 VDC
	EDU power supply	20.4 to 26.4 VDC
Power consumption (under maximum load)		1 W max.
Insulation resistance		20 MΩ min. (at 500 VDC)
Dielectric strength		600 VAC, 50/60 Hz for 1 min
Vibration resistance		10 to 55 Hz, 10 m/s² for 2 hours each in X, Y, and Z directions
Shock resistance		150m/s² max., 6 directions, 3 times each
Weight		70 g max.
Degree of protection		IP20
Main functions		Remote I/O communications, explicit message communications, CompoWay/F command feed-through function, parameter backup function, and configuration registration
Ambient operating temperature		Operating: -10°C to 55°C Storage: -25°C to 65°C (with no icing or condensation) 3 year warranty: -10°C to 50°C (with no icing or condensation)
Ambient operating humidity		Operating: 25% to 85% (with no condensation)
Memory protection		EEPROM, 100,000 write operations (backup data)
Dimensions		20 x 90 x 65 mm (W x H x D)

DeviceNet Communications Specifications

Item		Specifications
Communications protocol		Conforms to DeviceNet
Communi-cations functions	**Remote I/O communica-tions**	• Master-Slave connection (polling, bit-strobe, COS, cyclic) • Conforms to DeviceNet communications standards.
	Simple I/O allocations	• Allocation of input and output data using only switch settings and not the Configurator. • Allocation of only basic data, such as Temperature Controller status, present values, target values, and alarm output status. • Input area: 1 block, 86 words max. (up to the highest Communications Unit number) • Output area: 1 block, 74 words max. (up to the highest Communications Unit number)
	I/O allocations using the Configurator	• Allocate any I/O data using the Configurator. • Allocation of user-set data, parameters specific to DeviceNet Communications Units, and Temperature Controller variable area data. • Input area: 2 blocks, 100 words max. ✻1 • Output area: 1 block, 100 words max. (The first word is always the Output Execution Enabled Flags.) ✻2
	Message Communica-tions function	• Explicit message communications • CompoWay/F communications commands can be sent (commands are sent in explicit message format).
	Setting, monitoring, and manipulating from the Configurator	Functions Supported by the DeviceNet Configurator: (Using parameter editing or device monitoring for DeviceNet Communications Units and Temperature Controllers) • Setting and monitoring DeviceNet Communications Units. • Registering connection configurations, making initial settings ✻3, changing settings, and monitoring for Temperature Controllers. • Making allocations to the Master. • Allocating data in input areas and output areas. • Executing operation commands for Temperature Controllers.
Connection form		Combination of multi-drop method and T-branch connections (for trunk and drop lines)
Baud rate		DeviceNet: 500, 250, or 125 kbps (automatic follow-up)
Communications media		Special 5-wire cable (2 signal lines, 2 power supply lines, 1 shield line)
Communications distance		**Baud rate** / **Network length (max.)** / **Branch line length** / **Total branch line length** 500 kbps / 100 m max. (100 m max.) / 6 m max. / 39 m max. 250 kbps / 250 m max. (100 m max.) / 6 m max. / 78 m max. 125 kbps / 500 m max. (100 m max.) / 6 m max. / 156 m max. The values in parentheses are for Thin Cable.
Communications power supply		11 to 25 VDC
Maximum number of nodes		64 (DeviceNet Configurator is counted as one node when connected)
Maximum number of slaves		63
Error control checks		CRC errors
DeviceNet power supply		Supplied from DeviceNet communications connector (DeviceNet communications power and internal circuit power for DeviceNet Communications Unit)
Applicable Temperature Controllers		EJ1 Series TC4: EJ1N-TC4A-QQ and EJ1N-TC4B-QQ TC2: EJ1N-TC2A-QNHB, EJ1N-TC2B-QNHB, EJ1N-TC2A-CNB, and EJ1N-TC2B-CNB
Maximum number of Temperature Controllers that can be connected		16 (The maximum is 15, however, for side-by-side connections. The 16th Unit is an End Unit for distributed placement.)

✻1. Two blocks can be used (i.e., connections can be set) only when a CS/CJ-series DeviceNet Unit is used as a Master.
When a C200HX/HG/HE DeviceNet Master Unit is used, the input area will be one block with up to 100 words (200 bytes) (poll connections only).

✻2. When a C200HX/HG/HE DeviceNet Master Unit is used, a maximum of 32 words can be allocated per node.

✻3. Batch settings can be made for target values, alarm set values, PID constants, and other parameters for Temperature Controllers.

Dimensions

(Unit: mm)

EJ1N-HFUB-DRT

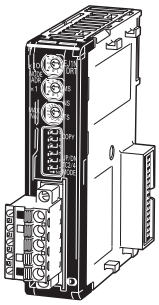

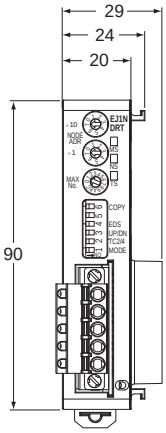

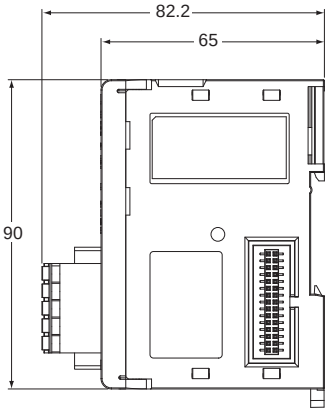

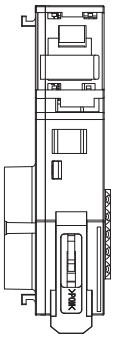

Multi-function Compact Inverter MX2-Series V1 type DeviceNet Communication Unit

3G3AX-MX2-DRT-E

Support for open network with DeviceNet Communications Unit

- Reduced wiring of Multi-function compact inverter MX2 series *1
- 8 types of remote I/O functions
  The Explicit Message functions in addition to remote I/O functions
- Parameter edit via DeviceNet by using support tool CX-Drive *2

*1 DeviceNet communication unit can be used with the inverter 3G3MX2 of unit version 1.1 or higher.
*2 CX-Drive can be used with version 2.6 or higher.

Ordering Information

Name	Mountable Inverter	Model
DeviceNet communication unit	MX2-series V1 type	3G3AX-MX2-DRT-E

Performance Specifications

Power supply	Supplied from the inverter
Protective structure	IP20
Ambient Operating Temperature	-10 to 55ºC (with no condensation)
Ambient Storage Temperature	-20 to 65ºC (with no condensation)
Ambient Operating Humidity	20 to 90%RH
Vibration Resistance	5.9m/s^2 (0.6G) , 10 to 55Hz
Application Environment	At a maximum altitude of 1,000 m; indoors (without corrosive gases or dust)
Insulation Resistance	500VAC (between isolated circuits)
Weight	Approx.170g
Number of Words allocated	Initial setting IN:2CH/OUT:2CH (At maximum setting IN:10CH/OUT:10CH)

Note. For detail,refer to the MX2-series V1 type Catalog (Cat. No.I920).

Dimensions

(Unit: mm)

3G3AX-MX2-DRT-E

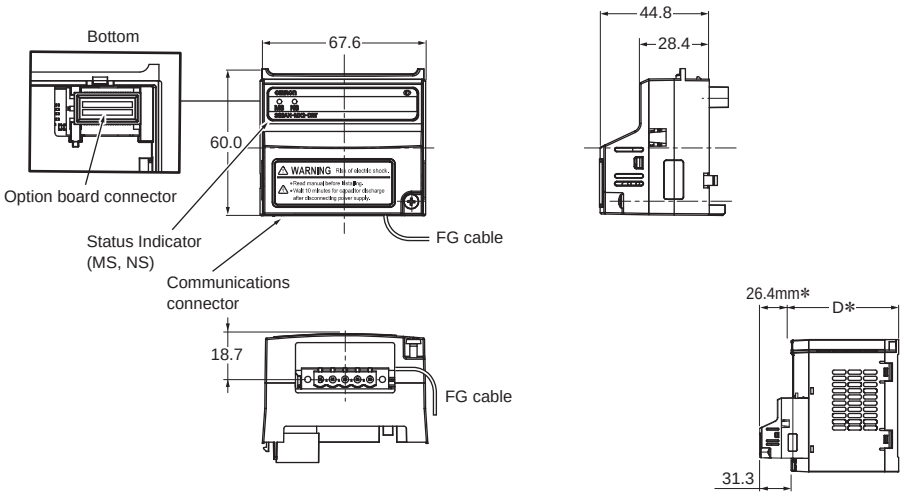

* After the DeviceNet Communication Unit is installed, dimension D of the inverter increases by 26.4 mm.
(Dimension D of the inverter varies depending on the capacity. Refer to the MX2-series USER'S MANUAL (Cat.No.I585))

High-function General-purpose Inverters RX-Series V1 type DeviceNet Communication Unit

3G3AX-RX-DRT-E

Support for open network with DeviceNet Communications Unit

- Reduced wiring of Multi-function compact inverter RX series *1
- 8 types of remote I/O functions
  The Explicit Message functions in addition to remote I/O functions
- Parameter edit via DeviceNet by using support tool CX-Drive *2

*1 DeviceNet communication unit can be used with the inverter 3G3MX2 of unit version 1.1 or higher.
*2 CX-Drive can be used with version 2.6 or higher.

Ordering Information

Name	Mountable Inverter	Model
DeviceNet communication unit	RX-series V1 type	3G3AX-RX-DRT-E

Performance Specifications

Power supply	Supplied from the inverter
Protective structure	IP20
Ambient Operating Temperature	-10 to 55ºC (with no condensation)
Ambient Storage Temperature	-20 to 65ºC (with no condensation)
Ambient Operating Humidity	20 to 90%RH
Vibration Resistance	5.9m/s^2 (0.6G) , 10 to 55Hz
Application Environment	At a maximum altitude of 1,000 m; indoors (without corrosive gases or dust)
Insulation Resistance	500VAC (between isolated circuits)
Weight	Approx.170g
Number of Words allocated	Initial setting IN:2CH/OUT:2CH (At maximum setting IN:10CH/OUT:10CH)

Note. For detail,refer to the RX-Series V1 type Catalog (Cat. No.I919).

Dimensions

(Unit: mm)

3G3AX-RX-DRT-E

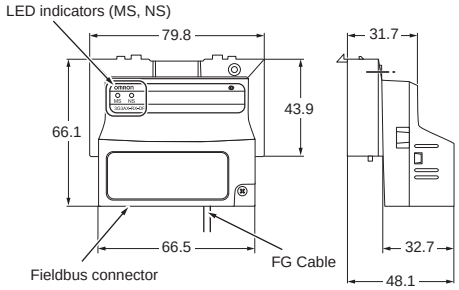

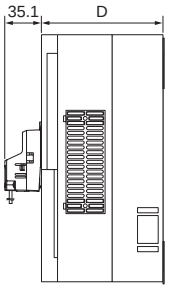

Note: After the DeviceNet™ Communication Unit is installed, dimension D of the inverter increases by 35.1 mm. (Dimension D of the inverter varies depending on the capacity. Refer to the RX-series V1 type USER'S MANUAL (Cat.No.I578))

MEMO

MEMO

CIP Safety on DeviceNet System

Safety Network Controller 112
NE0A-SCPU01
Safety Network Controller 117
NE1A-SCPU Series
Safety I/O Terminals 122
DST1 Series
Network Configurator 125
WS02-CFSC1-E

Safety Network Controller

NE0A-SCPU01

New Lineup for Safety Applications with Up to 12 Inputs

- Circuits for the required safety category are easy to build.
- The safety circuits you create can be registered as templates and reused, for easy standardization.
- TÜV-certified templates is also available.
- The NE0A operating conditions can be monitored from a standard DeviceNet Master.
- Network distribution is possible by combining with an NE1A Safety Controller.

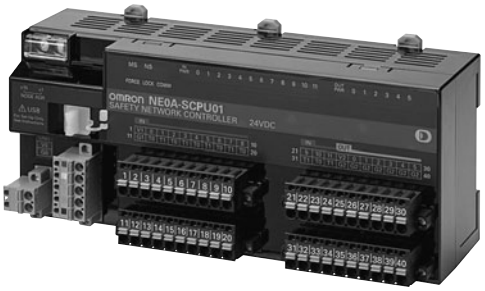

Ordering Information

Name	I/O points			Model	Unit version
	Safety inputs	Test outputs	Safety outputs		
Safety Network Controllers	12 ✻	2	6	**NE0A-SCPU01**	Ver. 1.0

✻ When using the NE0A-SCPU01 as a standalone Controller, one input each is required for the feedback input and manual restart.
Note: Network Configurator version 2.1□ or higher must be used when using a NE0A-SCPU01 Safety Network Controller.

Specifications

Certified Standards

Certification body	Standard
TÜV Rheinland	NFPA 79-2007 ISO13849-1:1999 IEC61508 part1-7/12.98-05.00 IEC61131-2:2007 EN ISO13849-1:2006 EN ISO13849-2:2003 EN ISO 13850:2006 (EN418:1992) EN61000-6-4:2007 EN61000-6-2:2005 EN60204-1:2006 ANSI RIA15.06-1999 ANSI B11.19-2003
UL	UL508 UL1604 UL1998 NFPA79 IEC61508 CSA22.2 No.142 CSA22.2 No.213

General Specifications

DeviceNet Communications power supply voltage		11 to 25 VDC (supplied from the communications connector)
Internal circuit power supply voltage (V0) ✻1		20.4 to 26.4 VDC (24 VDC -15%/+10%)
I/O power supply voltage (V1, V2) ✻1		
Current consumption	**Communications power supply**	24 VDC, 15 mA
	Internal circuit power supply	24 VDC, 110 mA
	I/O power supply ✻2	24VDC, 80mA(Input) 80mA(Output)
Overvoltage category		II
Noise immunity		Conforms to IEC61131-2.
Vibration resistance		10 to 57 Hz: 0.35 mm, 57 to 150 Hz: 50 m/s^2
Shock resistance		150 m/s^2: 11 ms
Mounting method		DIN track mounting (IEC 60715 TH35-7.5/TH35-15)
Ambient operating temperature		-10°C to 55°C
Ambient operating humidity		10% to 95% (with no condensation)
Ambient storage temperature		-40°C to 70°C
Degree of protection		IP20
Serial interface		USB version 1.1
Weight		440 g max.

✻1. V0-G0: Internal control circuit
V1-G1 (G): For external input device, test output
V2-G2 (G): For external output device
✻2. Not including power consumption for external devices.

Safety Input Specifications

Input type	Sinking inputs (PNP)
ON voltage	11 VDC min. between each terminal and G1
OFF voltage	5 VDC min. between each terminal and G1
OFF current	1 mA max.
Input current	4.5 mA

Test Output Specifications

Output type	Sourcing outputs (PNP)
Rated output current	60 mA
ON residual voltage	1.2 V max. between each output terminal and V1
Leakage current	0.1 mA max.

Safety Output Specifications

Output type	Sourcing outputs (PNP)
Rated output current	0.5 A max./output
ON residual voltage	1.2 V max. between each output terminal and V2
Leakage current	0.1 mA max.

DeviceNet Communications Specifications

Communications protocol	Conforms to DeviceNet
Connection form	Multi-drop system and T-branch system can be combined (for trunk line and branch lines)
Baud rate	500/250/125 kbps
Communications media	Special cable, 5 conductors (2 for communications, 2 for power supply, 1 for shielding)
Communications distance	<table><tr><th>Baud rate</th><th>Network length (max.)</th><th>Branch line length</th><th>Total branch line length</th></tr><tr><td>500 kbps</td><td>100 m max. (100 m max.)</td><td rowspan="3">6 m max.</td><td>39 m max.</td></tr><tr><td>250 kbps</td><td>250 m max. (100 m max.)</td><td>78 m max.</td></tr><tr><td>125 kbps</td><td>500 m max. (100 m max.)</td><td>156 m max.</td></tr></table> The values in parentheses are for Thin Cable.
Communications power supply	11 to 25 VDC
Maximum number of nodes	63
Safety I/O communications	Safety Master function • Max. no. of connections: 2 (one each for inputs and outputs) Multi-cast inputs can be used to enable communications with up to 15 Safety Masters. • Connection type: Single-cast, multi-cast
Standard I/O communications	Standard Slave function • Max. no. of connections: 2 • Connection type: Poll, bit-strobe, COS, cyclic
Message communications	Max. message length: 502 bytes

Functions

The following function blocks are available for designing safety circuits with the NE0A-SCPU01.
These function blocks can be selected and assembled using the interactive wizard format to efficiently design safety applications.

Classification of function block for safety circuit designs	Application		
Function blocks for safety input devices and setting input filter times	The following six parts can be selected for use as safety input devices. For Category 3 or 4 compliance, the filter monitoring time between signals can also be adjusted with redundant wiring for the necessary safety devices.		
		Emergency Stop Switches	
		Safety Door Switches	
		Limit Switches	
		Safety Light Curtains	
		Enabling Switches	
		Mode Selectors	
Logic function blocks for input conditions	Select a Safety Light Curtain as the safety input device, and select a muting function when required.		
		No setting	Uses the ON/OFF status from the safety input device exactly as it is.
		OR operation	• For switching maintenance areas with a Mode Selector. • For applications such as a Safety Light Curtain muting function.
		AND/OR operations	
		AND operation	
		OR/AND operations	
Function blocks for resets	Selects manual or auto reset.		
Logic function blocks for output conditions	For applications such as stopping all outputs for multiple safety devices.		
		No setting	Uses the ON/OFF status of the safety signal exactly as it is.
		AND operation	Selects the interlock conditions for the safety signal.
		OR/AND operations	
Function blocks for setting the welded contact check	Used to check the safety condition of an output device.		
		No setting	No checking of the output device (used for Category 2 or lower).
		EDM	Used to check for contact welding in a Relay or Contactor. Also used to change the setting for monitoring time.
Function blocks for safety output devices and setting output delay times	For setting an auxiliary output (to output an error condition) and for setting the output delay.		

Note: There is a possibility that safety cannot be maintained when an OR part or an AND/OR part is selected for input logic, or an OR/AND part is selected for output logic. Sufficiently confirm safety prior to use.

Internal Circuit Diagrams

NE0A-SCPU01

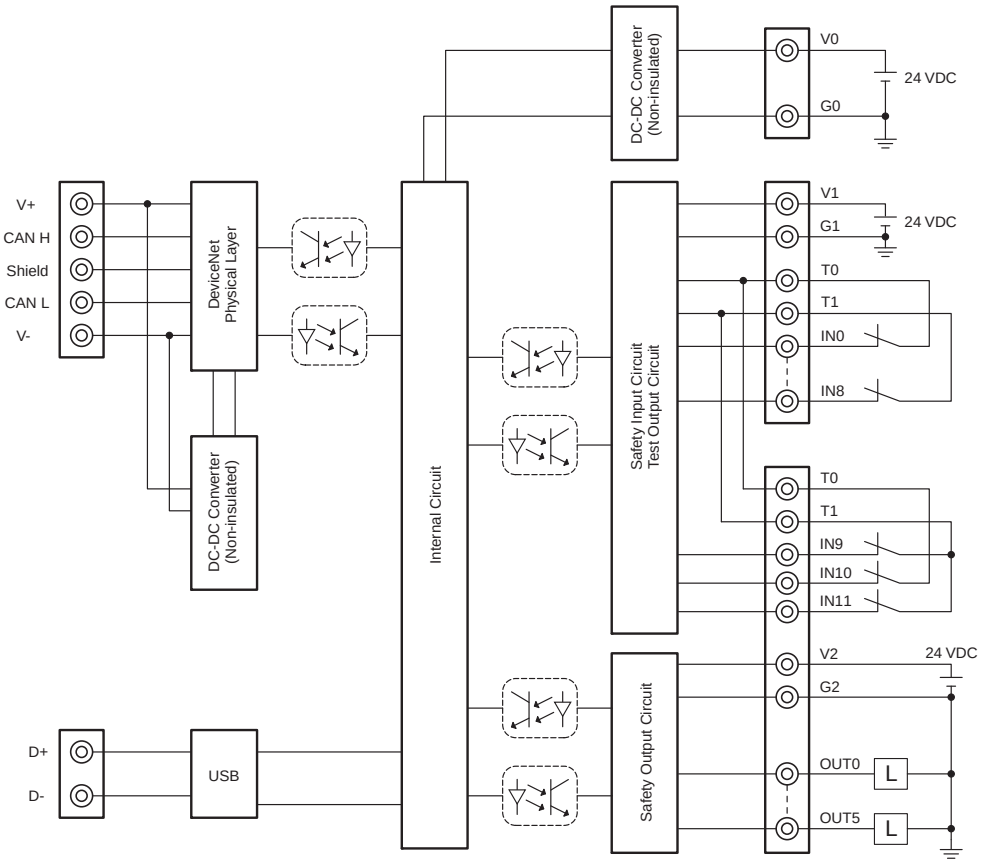

Terminal No.	Terminal name	Description
--	V0	Power supply terminal for internal circuit (24 VDC)
--	G0	
1	V1	Power supply terminal for external input device and test output (24 VDC)
11	G1	
24	V2	Power supply terminal for external output device (24 VDC)
34	G2	
2 to 10	IN0 to IN8	Safety input terminal Terminals IN10 and IN11 are used only for connecting a reset switch or EDM feedback.
21 to 23	IN9 to IN11	
12 to 20 31 to 33	T0 to T1	Test output terminal Connected to IN0 to IN11 safety inputs. T0 and T1 output test pulses with different patterns. The T0 terminals are internally connected and the T1 terminals are internally connected.
25 to 30	OUT0 to OUT5	Safety output terminals
35 to 40	G2	Common terminal Terminals 34 to 40 are internally connected.

Dimensions

(Unit: mm)

NE0A-SCPU01

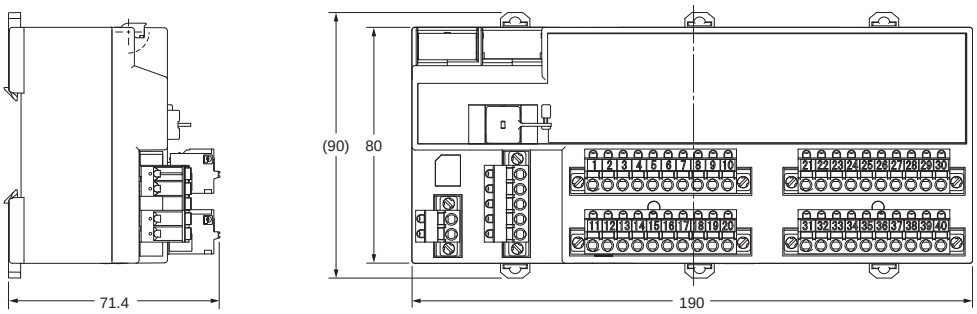

Safety Precautions

- **Be sure to read the following operation manual for precautions and other details required for correct use of the Safety Network Controller. *CIP Safety on DeviceNet Safety Network Controller NE0A Series Operation Manual* (Cat. No. Z916)**

Safety Network Controller

NE1A-SCPU Series

Achieve Safety Control through Programming.

- Compact Safety Controller.
- The NE1A-SCPU01-V1 provides 16 built-in safety inputs and 8 built-in safety outputs.
  The NE1A-SCPU02 provides 40 built-in safety inputs and 8 built-in safety outputs.
- Reduced wiring with safety networks. Connect up to 32 Safety Terminals.
- Monitor the safety system from Standard Controllers across the network.
- ISO13849-1 (PLe) and IEC 61508 SIL3 certification.

Ordering Information

Name	I/O points			Model	Unit version
	Safety inputs	Test outputs	Safety outputs		
Safety Network Controllers	16	4	8	**NE1A-SCPU01-V1**	Ver. 2.0
	40	8	8	**NE1A-SCPU02**	Ver. 2.0

Note: The standard NE1A Controllers are equipped with spring-cage terminal blocks, but other screw terminal blocks are available if desired, e.g., to replace previous terminals. Refer to *Accessories*.

Specifications

Certified Standards

Certification body	Standard
TÜV Rheinland	NFPA 79-2012, EN ISO13849-1: 2008, IEC61508 part 1-7: 2010, IEC61131-2: 2007, EN ISO13849-2: 2012, EN61000-6-4: 2007, EN61000-6-2: 2005, EN60204-1: 2006, EN ISO13850: 2006(EN418: 1992), ANSI RIA15.06-1999 ANSI B11.19-2010
UL	UL508, ANSI/ISA 12.12.01, UL1998, NFPA79, IEC61508 CSA22.2 No.142, CSA22.2 No.213

General Specifications

Item		Model	NE1A-SCPU01-V1	NE1A-SCPU02
DeviceNet Communications power supply voltage			11 to 25 VDC (supplied from the communications connector)	
Internal circuit power supply voltage (V0) ✱1			20.4 to 26.4 VDC (24 VDC -15%/+10%)	
I/O power supply voltage (V1, V2) ✱1				
Current consumption	**Communications power supply**		24 VDC, 15 mA	
	Internal circuit power supply		24 VDC, 230 mA	24 VDC, 280 mA
	I/O power supply ✱2		24 VDC, 40 mA (Input) 120 mA (Output)	24 VDC, 80 mA (Input) 150 mA (Output)
Overvoltage category			II	
Noise immunity			Conforms to IEC61131-2.	
Vibration resistance			10 to 57 Hz: 0.35 mm, 57 to 150 Hz: 50 m/s^2	
Shock resistance			150 m/s^2: 11ms	
Mounting method			DIN Track (IEC 60715 TH35-7.5/TH35-15)	
Ambient operating temperature			-10°C to 55°C	
Ambient operating humidity			10% to 95% (with no condensation)	
Ambient storage temperature			-40°C to 70°C	
Degree of protection			IP20	
Serial interface			USB Ver1.1	
Weight			460 g max.	690 g max.

✱1. V0-G0: Internal control circuit
V1-G1 (G): For external input device, test output
V2-G2 (G): For external output device
The two ground terminals on the NE1A-SCPU02 are internally connected.
✱2. Not including power consumption for external devices.

Safety Input Specifications

Input type	Sinking inputs (PNP)
ON voltage	11 VDC min. between each terminal and ground
OFF voltage	5 VDC min. between each terminal and ground
OFF current	1 mA max.
Input current	4.5 mA

Safety Output Specifications

Output type	Sourcing outputs (PNP)
Rated output current	0.5 A max./output
ON residual voltage	1.2 V max. between each output terminal and V2
Leakage current	0.1 mA max.

Test Output Specifications

Output type	Sourcing outputs (PNP)
Rated output current	0.7 A max./output ✱
ON residual voltage	1.2 V max. between each output terminal and V1
Leakage current	0.1 mA max.

✱ The maximum current for simultaneously ON outputs is 1.4 A.
(T0 to T3: NE1A-SCPU01-V1, T0 to T7: NE1A-SCPU02)
A 15 to 400-mA, 24-VDC external indicator can be connected to T3 and T7.

DeviceNet Communications Specifications

Communications protocol	Conforms to DeviceNet
Connection form	Multi-drop system and T-branch system can be combined (for trunk line and branch lines)
Baud rate	500/250/125 kbps
Communications media	Special 5-wire cable (2 signal lines, 2 power supply lines, 1 shield line)
Communications distance	<table><tr><th>Baud rate</th><th>Network length (max.)</th><th>Branch line length</th><th>Total branch line length</th></tr><tr><td>500 kbps</td><td>100 m max. (100 m max.)</td><td rowspan="3">6 m max.</td><td>39 m max.</td></tr><tr><td>250 kbps</td><td>250 m max. (100 m max.)</td><td>78 m max.</td></tr><tr><td>125 kbps</td><td>500 m max. (100 m max.)</td><td>156 m max.</td></tr></table> The values in parentheses are for Thin Cable.
Communications power supply	11 to 25 VDC
Maximum number of nodes	63
Safety I/O communications (Pre-Ver. 1.0)	Safety Master function • Max. no. of connections: 16 • Max. data size: Input 16 bytes or output 16 bytes (per connection) • Connection type: Single-cast, multi-cast Safety Slave function • Max. no. of connections: 4 • Max. data size: Input 16 bytes or output 16 bytes (per connection) • Connection type: Single-cast, multi-cast
Safety I/O communications (unit version 1.0 or later)	Safety Master function • Max. no. of connections: 32 • Max. data size: Input 16 bytes or output 16 bytes (per connection) • Connection type: Single-cast, multi-cast Safety Slave function • Max. no. of connections: 4 • Max. data size: Input 16 bytes or output 16 bytes (per connection) • Connection type: Single-cast, multi-cast
Standard I/O communications (all unit versions)	Standard Slave function • Max. no. of connections: 2 • Max. data size: Input 16 bytes or output 16 bytes (per connection) • Connection type: Poll, bit-strobe, COS, cyclic
Message communications	Max. message length: 552 bytes

Functions

Function Blocks

NE1A-SCPU-series Controller support the following logic functions and function blocks. Support depends on the unit version.

● Logic Functions

Name	Function list entry	Supporting unit versions
NOT	NOT	All
AND	AND	
OR	OR	
Exclusive OR	EXOR	
Exclusive NOR	EXNOR	
RS Flip-flop	RS-FF	1.0 or later
Comparator	Comparator	

● Function Blocks

Name	Function list entry	Supporting unit versions
Reset	Reset	All
Restart	Restart	
Emergency Stop Monitoring	E-STOP	
Light Curtain Monitoring	Light Curtain Monitoring	
Safety Gate Monitoring	Safety Gate Monitoring	
Two-hand Controller	Two Hand Controller	
Off-Delay Timer	Off-Delay Timer	
On-Delay Timer	On-Delay Timer	
User Mode Switch Monitoring	User Mode Switch	
External Device Monitoring	EDM	
Routing	Routing	
Muting	Muting	1.0 or later
Enable Switch Monitoring	Enable Switch	
Pulse Generator	Pulse Generator	
Counter	Counter	
Multiconnector	Multi Connector	

Internal Circuit Diagrams

NE1A-SCPU01-V1

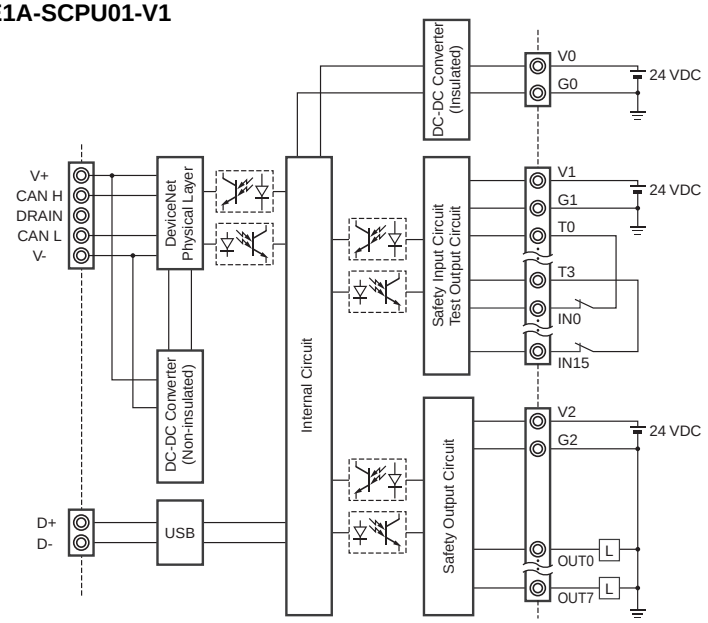

Terminal name	Description
V0	Power supply terminal for internal circuit The two V0 terminals are internally connected.
G0	Power supply terminal for internal circuit The two G0 terminals are internally connected.
V1	Power supply terminal for external input device and test output
G1	Power supply terminal for external input device and test output
V2	Power supply terminal for external output device
G2	Power supply terminal for external output device
IN0 to IN15	Safety input terminal
T0 to T3	Test output terminal Connected to IN0 to IN15 safety inputs. Each test output terminal outputs a different test pulse pattern. Terminal T3 also supports a current monitoring function for the output signal. Example: Muting lamp
OUT0 to OUT7	Safety output terminals

NE1A-SCPU02

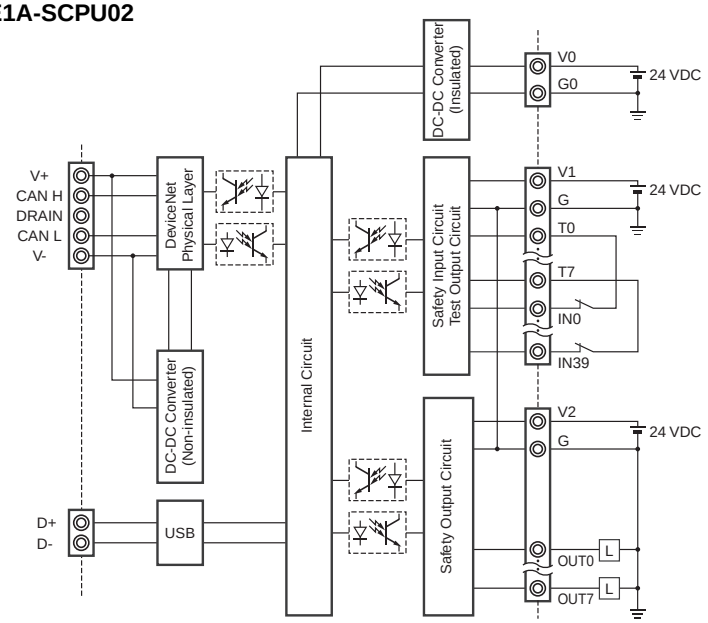

Terminal name	Description
V0	Power supply terminal for internal circuit The two V0 terminals are internally connected.
G0	Power supply terminal for internal circuit The two G0 terminals are internally connected.
V1	Power supply terminal for external input device and test output
G	Power supply terminal for external input device and test output
V2	Power supply terminal for external output device
G	Power supply terminal for external output device
IN0 to IN39	Safety input terminal
T0 to T3	Connected to IN0 to IN19 safety inputs. Each test output terminal outputs a different test pulse pattern. Terminal T3 also supports a current monitoring function for the output signal. Example: Muting lamp
T4 to T7	Test output terminal Connected to IN20 to IN39 safety inputs. Each test output terminal outputs a different test pulse pattern. Terminal T7 also supports a current monitoring function for the output signal. Example: Muting lamp
OUT0 to OUT7	Safety output terminals

Dimensions

(Unit: mm)

NE1A-SCPU01-V1

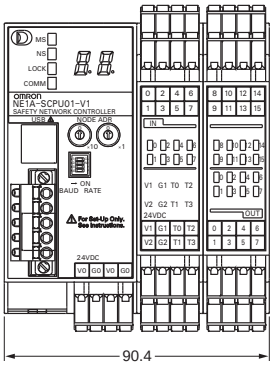

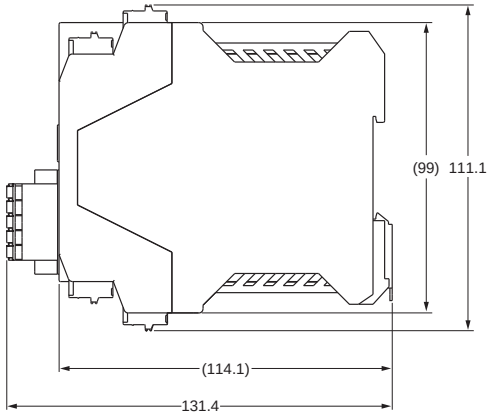

NE1A-SCPU02

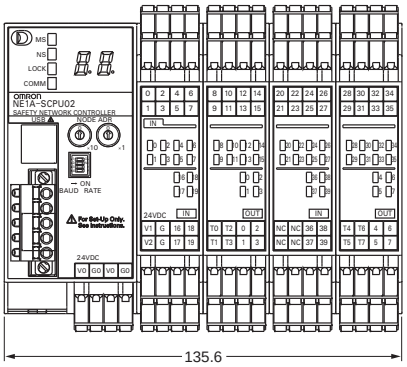

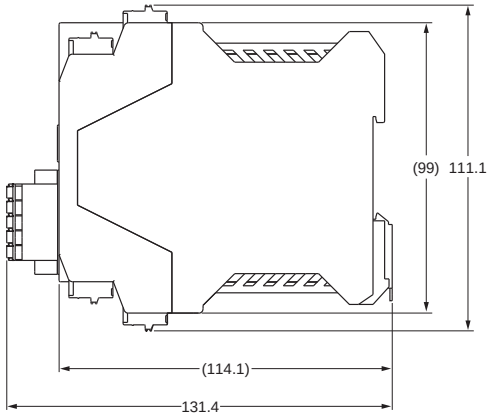

Safety Precautions

● **Be sure to read the following operation manual for precautions and other details required for correct use of the Safety Network Controller. *CIP Safety on DeviceNet Safety Network Controller Operation Manual* (Cat. No. Z906)**

Functions Supported According to Unit Version

❍ : Supported, ---: Not supported

Function	Model / Unit version	NE1A-SCPU01 Pre-Ver. 1.0	NE1A-SCPU01-V1 Unit version 1.0/2.0	NE1A-SCPU02 Unit version 1.0/2.0
Logic processing functions	Maximum program size (total number of function blocks)	128	254	254
	New Function Blocks • RS flip-flop • Multiconnector • Muting • Enable Switch Monitoring • Pulse Generator • Counter • Comparator	---	❍	❍
	Selecting a rising edge as the reset condition for Reset and Restart function blocks	---	❍	❍
	Using local I/O status in logic programming	---	❍	❍
	Using overall Unit status in logic programming	---	❍	❍
	Program execution wait functions	---	❍ (Unit version 2.0 or higher)	❍ (Unit version 2.0 or higher)
I/O control functions	Monitoring contact operation counter	---	❍	❍
	Mounting total ON time monitor	---	❍	❍
DeviceNet communications functions	Number of safety I/O connections for Safety Master	16	32	32
	Selecting operating mode for safety I/O communications when communications errors occur	---	❍	❍
	Attaching local output data to send data during slave operation	---	❍	❍
	Attaching local I/O monitor data to send data during slave operation	---	❍	❍
	Functions to communicate with devices existing on other networks (Off-Link connection)	---	❍ (Unit version 2.0 or higher)	❍ (Unit version 2.0 or higher)
System startup and error recovery functions	Storing log of nonfatal errors in nonvolatile memory	---	❍	❍
	Adding function block errors to error log	---	❍	❍
EtherNet/IP communications functions	I/O communications	---	---	---
	Message communications	---	---	---
	Read/write of target I/O area	---	---	---
Routing between DeviceNet and EtherNet/IP	I/O routing	---	---	---
	Message routing	---	---	---
UDP/IP message communications functions	Message communications by UDP/IP	---	---	---

● Unit Versions and Network Configurator Versions

Network Configurator version 2.0□ or higher must be used when using a NE1A-SCPU01-V1 or NE1A-SCPU02 Safety Logic Controller with unit version 2.0.

❍ : Supported, ---: Not supported

Model	Network Configurator					
	Ver. 1.3□	Ver. 1.5□	Ver. 1.6□	Ver. 2.0□/2.1□	Ver.2.2□	Ver.3.3□
NE1A-SCPU01 Pre-Ver. 1.0	❍	❍	❍	❍	❍	❍
NE1A-SCPU01-V1 Unit version 1.0	×	×	❍	❍	❍	❍
NE1A-SCPU02 Unit version 1.0	×	×	❍	❍	❍	❍
NE1A-SCPU01-V1 Unit version 2.0	×	×	❍ (*1)	❍	❍	❍
NE1A-SCPU02 Unit version 2.0	×	×	❍ (*1)	❍	❍	❍

***1.** It can be used as unit version 1.0.
Note 1: Users who use Network Configurator version 1.5□ or earlier can upgrade to version 1.6□ at no charge.
Note 2: When using Network Configurator version 1.6□, there are no operational differences in the NE1A-SCPU01-V1 and NE1A-SCPU02.

● Version Upgrade

If you have purchased Ver.1.□□, you will need to buy the upgrade CD-ROM. (Refer to page 127.)

Safety I/O Terminals

DST1 Series

Distributed Safety Terminals That Reduce Wiring.

- Four models are available to match the I/O type and number of points.
- Monitor operation from the DeviceNet Master using the DeviceNet Slave functionality.
- Support for logic processing by the DST1-XD0808SL-1.
- IEC 61508 SIL3 and EN 954-1/ISO13849-1 CAT4 certification.

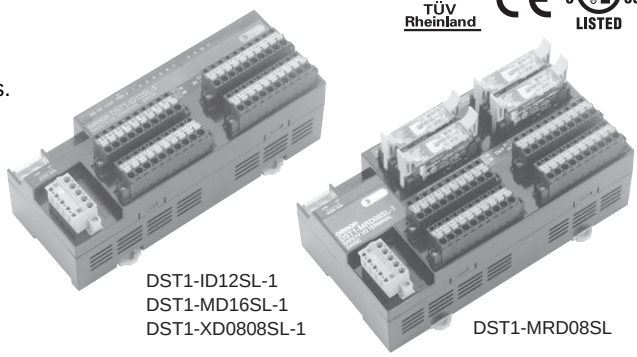

DST1-ID12SL-1
DST1-MD16SL-1
DST1-XD0808SL-1

DST1-MRD08SL

Ordering Information

Name	I/O points	Model
Safety I/O Terminals	Safety inputs: 12, test outputs: 4	**DST1-ID12SL-1**
	Safety inputs: 8, safety outputs (semiconductor): 8, test outputs: 4	**DST1-MD16SL-1**
	Safety inputs: 8, safety outputs (semiconductor): 8, test outputs: 4	**DST1-XD0808SL-1 ✻**
	Safety inputs: 4, safety outputs (relay): 4, test outputs: 4	**DST1-MRD08SL-1**

Note: The standard DS1T Safety I/O Terminals are equipped with spring-cage terminal blocks, but screw terminal blocks are available if desired, e.g., to replace previous terminals. Refer to CIP Safety on DeviceNet Accessories.

✻ Use the Safety Network Configurator Ver. 2.0 or later to make DST1-XD0808SL-1 settings.

Specifications

Certified Standards

Certification body	Standard
TÜV Rheinland	NFPA 79-2007, IEC61508 part1-7/12.98-05.00, IEC61131-2:2007, EN ISO13849-2:2003, EN954-1:1996 (ISO13849-1:1999), EN61000-6-4:2007, EN61000-6-2:2005, EN60204-1:2006, EN419:1992, ANSI RIA15.06-1999, ANSI B11.19-2003
UL	UL508, UL1604 (excluding the DST1-MRD08SL-1), UL1998, NFPA79, IEC61508, CSA22.2 No.142, CSA22.2 No.213 (excluding DST1-MRD08SL-1)

General Specifications

Item / Model		DST1-ID12SL-1	DST1-MD16SL-1	DST1-MRD08SL-1	DST1-XD0808SL-1
DeviceNet Communications power supply voltage		11 to 25 VDC (supplied from the communications connector)			
I/O power supply voltage		20.4 to 26.4 VDC (24 VDC -15%/+10%)			
Current consumption	**Communications power supply**	24 VDC, 100 mA	24 VDC, 110 mA	24 VDC, 100 mA	24 VDC, 110 mA
	I/O power supply ✻	24 VDC 70 mA	24 VDC 50 mA (Input) 130 mA (Output)	24 VDC 80 mA (Input) 130 mA (Output)	24 VDC 50 mA (Input) 130 mA (Output)
Overvoltage category		II			
Noise immunity		Conforms to IEC61131-2			
Vibration resistance		10 to 57 Hz: 0.35-mm single amplitude, 57 to 150 Hz: 50 m/s^2			
Shock resistance		150m/s^2 11ms		100m/s^2 11ms	150m/s^2 11ms
Mounting method		DIN track mounting (DIN 35 mm)			
Ambient operating temperature		-10°C to 55°C			
Ambient operating humidity		10% to 95% (with no condensation)		10% to 85% (with no condensation)	10% to 95% (with no condensation)
Ambient storage temperature		-40°C to 70°C			
Degree of protection		IP20			
Weight		420 g		600 g	420 g

✻ Not including power consumption for external devices.

Safety Input Specifications
(Common with the DST1 Series)

Input type	Sinking inputs (PNP)
ON voltage	11 VDC min.
OFF voltage	5 VDC max.
OFF current	1 mA max.
Input current	6 mA

Safety Output Specifications (Semiconductor output) (Common with the DST1-MD16SL-1/XD0808SL-1)

Output type	Sourcing outputs (PNP)
Rated output current	0.5 A max./output
ON residual voltage	1.2 V max.
Leakage current	0.1 mA max.

Test Output Specifications
(Common with the DST1 Series)

Output type	Sourcing outputs (PNP)
Rated output current	0.7 A max./output
ON residual voltage	1.2 V max.
Leakage current	0.1 mA max.

Safety Output Specifications (Relay Output)
(DST1-MRD08SL-1)

Applicable relays		G7SA-2A2B, EN50205 Class A
Failure rate P level ✻ (Reference value)		5 VDC, 1 mA
Rated load (resistive)		2 A at 240 VAC, 2 A at 30 VDC
Durability	**Mechanical**	5,000,000 operations min. (at 7,200 operations/h)
	Electrical	100,000 operations min. (at 1,800 operations/h with a resistive load)

✻ This value is equivalent to 300 operations/minute.

CIP Safety on DeviceNet Communications

Safety Slave communications	Max. 4 connections (Max. 2 connections for the DST1-XD0808SL-1)

DeviceNet Slave Communications
(Common with the DST1 Series)

Standard Slave communications	Max. 2 connections

Internal Circuit Diagrams

DST1-ID12SL-1

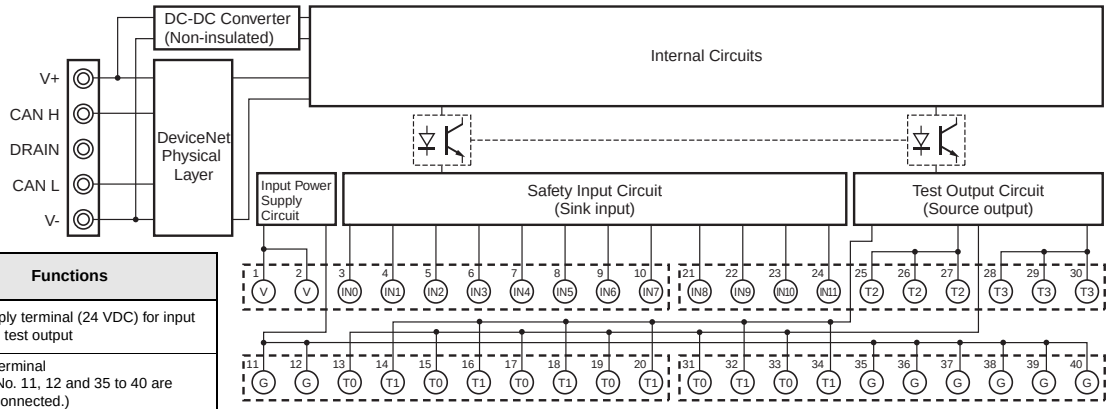

Terminal No.	Name	Functions
1, 2	V	Power supply terminal (24 VDC) for input device and test output
11, 12	G	
35 to 40	G	Common terminal (Terminal No. 11, 12 and 35 to 40 are internally connected.)
3 to 10 21 to 24	IN0 to IN11	Safety input terminal
13 to 20 25 to 30 31 to 34	T0 to T3	Test output terminal

DST1-MD16SL-1
DST1-XD0808SL-1

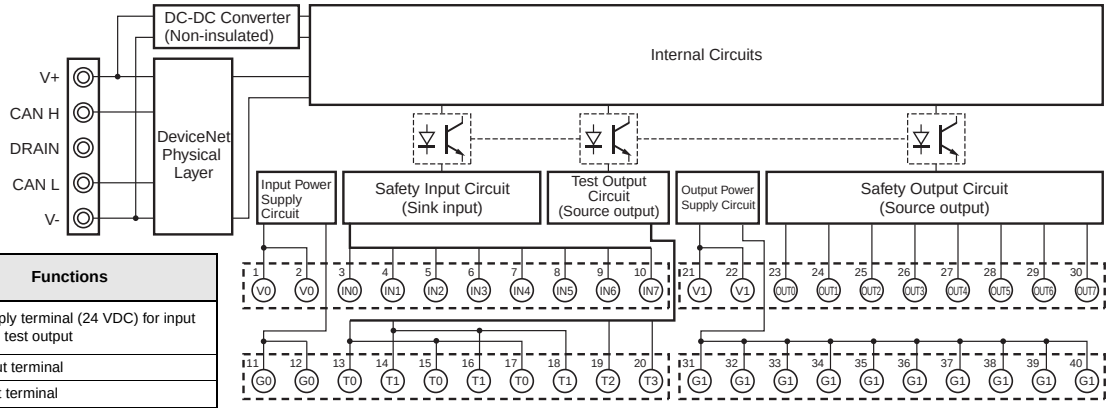

Terminal No.	Name	Functions
1, 2	V0	Power supply terminal (24 VDC) for input device and test output
11, 12	G0	
3 to 10	IN0 to IN7	Safety input terminal
13 to 20	T0 to T3	Test output terminal
21, 22	V1	Power supply terminal (24 VDC) for output device
31, 32	G1	
23 to 30	OUT0 to OUT7	Safety output terminal
33 to 40	G1	Common terminal (Terminal Nos. 31 to 40 are internally connected.)

DST1-MRD08SL-1

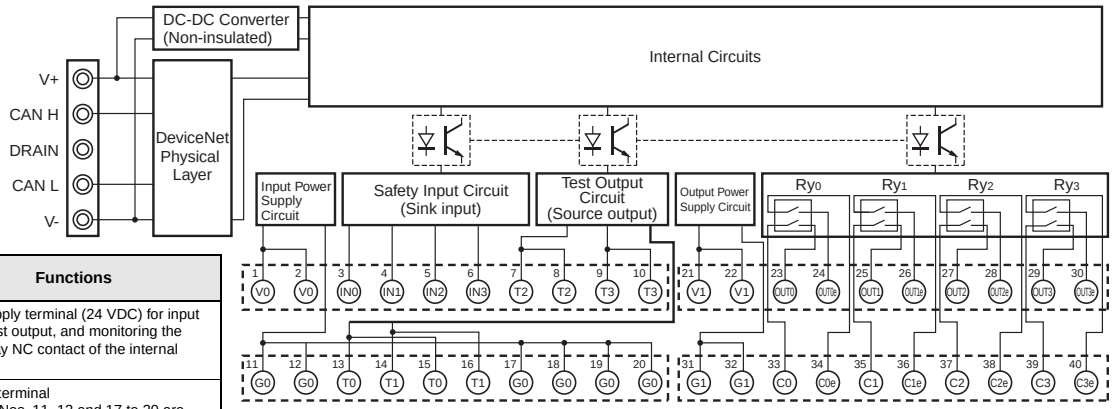

Terminal No.	Name	Functions
1, 2	V0	Power supply terminal (24 VDC) for input device, test output, and monitoring the safety relay NC contact of the internal circuit
11, 12	G0	
17 to 20	G0	Common terminal (Terminal Nos. 11, 12 and 17 to 20 are internally connected.)
3 to 6	IN0 to IN3	Safety input terminal
7 to 10 13 to 16	T0 to T3	Test output terminal
21, 22	V1	Power supply terminal (24 VDC) for driving the safety relay of the internal circuit
31, 32	G1	
23 to 30 33 to 40	OUT0 to OUT3 C0 to C3 OUT0e to OUT3e C0e to C3e	Safety output terminal (The outputs of terminal No. 23/33 (OUT0) and 24/34 (OUT0e) are the same.) (The outputs of terminal No. 25/35 (OUT1) and 26/36 (OUT1e) are the same.) (The outputs of terminal No. 27/37 (OUT2) and 28/38 (OUT2e) are the same.) (The outputs of terminal No. 29/39 (OUT3) and 30/40 (OUT3e) are the same.)

Dimensions

(Unit: mm)

DST1-ID12SL-1
DST1-MD16SL-1
DST1-XD0808SL-1

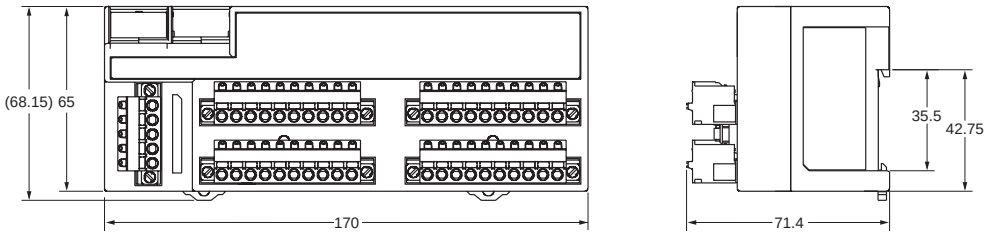

DST1-MRD08SL-1

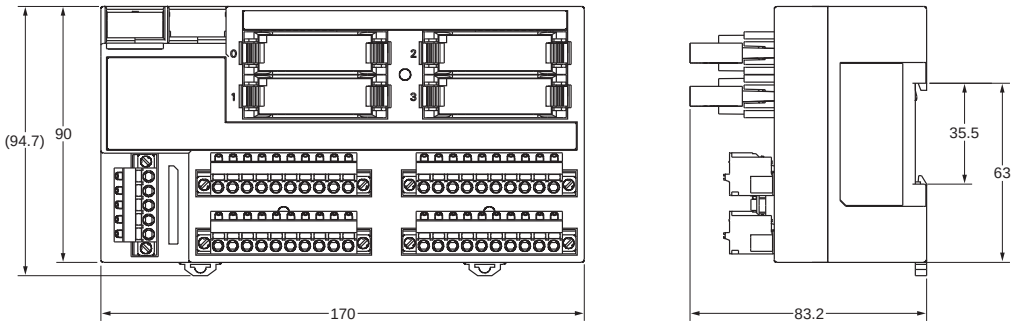

Safety Precautions

- **Be sure to read the following operation manual for precautions and other details required for correct use of the Safety Network Controller. *CIP Safety on DeviceNet Safety I/O Terminals Operation Manual* (Cat. No. Z904)**

Network Configurator

WS02-CFSC1-E

Programming Software for Creating Safety Circuits.

- Performs settings for the Safety Network Controllers and Safety I/O Terminals.
- Provides safety circuit programming functions.
- Provides monitoring functions for safety circuits.
- Includes DeviceNet Configurator functions.

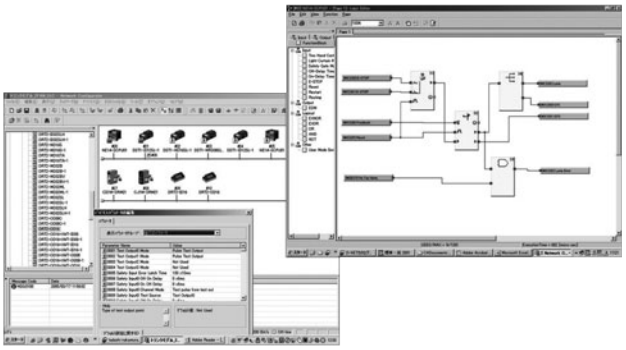

Ordering Information

Name	Components	Applicable computer	Applicable OS ✻	Model
Network Configurator	Installation disc (CD-ROM: 1 license)	IBM PC/AT or compatible	Windows XP Service Pack 3 (32-bit edition) Windows Vista Service Pack 2 (32-bit edition, 64-bit edition) Windows 7 (32-bit edition, 64-bit edition) Windows 8 (32-bit edition, 64-bit edition) Windows 8.1 (32-bit edition, 64-bit edition) Windows 10 (32-bit edition, 64-bit edition)	**WS02-CFSC1-EV3**
	Upgrade disc (CD-ROM: 1 license)			**WS02-CFSC1-EV3-UP**

Note: Consult your OMRON representative for the license not listed above.
✻ The applicable OS depends on the version. Refer to general specifications for details.

System Configuration

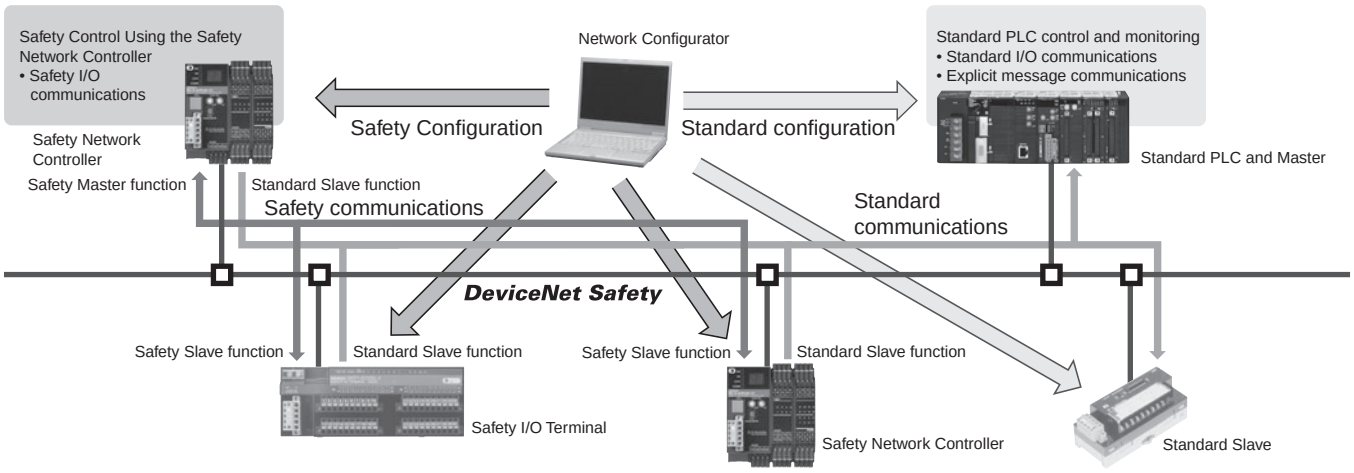

General Specifications

Item	Overview
OS **Japanese or English version**	■ Ver. 2.2□ or earlier Windows 2000 Professional (Service Pack 4 or later) Windows XP (Service Pack 2 or later, except for 64-bit version) Windows Vista (Service Pack 1 or later, except for 64-bit version) ■ Ver. 3.30 or later Windows XP (Service Pack 3 or later, except for 64-bit version) Windows Vista (Service Pack 2 or later) Windows 7 ■ Ver. 3.4 or later Windows XP Service Pack 3 (32-bit edition) Windows Vista Service Pack 2 (32-bit edition, 64-bit edition) Windows 7 (32-bit edition, 64-bit edition) Windows 8 (32-bit edition, 64-bit edition) Windows 8.1 (32-bit edition, 64-bit edition) Windows 10 (32-bit edition, 64-bit edition) **Note:** Administrator rights are required for installation.
Main unit	Personal computer with processor recommended by Microsoft
Memory	Memory capacity recommended by Microsoft
Hard disk drive	At least 200 MB of hard disk space
Monitor	SVGA (800 x 600 resolution) or higher with 256 colors minimum
Disk device	CD-ROM drive
Mouse	Windows-supported mouse or other pointing devices
Communications port (Note)	One of the following communications port is required: • USB port: When using a USB port (USB 1.1) of NE1A-SCPU series or NE0A series to connect online • Ethernet port: When using Ethernet to connect online • DeviceNet interface card (3G8F7-DRM21 or 3G8E2-DRM21-V1): When using DeviceNet to connect online

Note 1: PC cannot be put into a standby state with the NE1A series connected via USB cable.
2: DeviceNet interface card does not conform to 64-bit operating system.
3: One or more USB port is required on a communications port of the maintenance tool.
4: Windows is a registered trademark of Microsoft.

Safety Precautions

● **Be sure to read the following operation manual for precautions and other details required for correct use of the Safety Network Controller.**
***CIP Safety on DeviceNet Safety Network Configurator Operation Manual* (Cat. No. Z905)**

Unit Versions and Network Configurator Versions

Network Configurator version 2.0□ or higher must be used when using a NE1A-SCPU01-V1 or NE1A-SCPU02 Safety Logic Controller with unit version 2.0.
The following table shows the relationship between unit versions and Network Configurator versions.

❍ : Applicable, ×: Not applicable

Model	Network Configurator					
	Ver. 1.3□	Ver. 1.5□	Ver. 1.6□	Ver. 2.0□/2.1□	Ver.2.2□	Ver.3.3□
NE1A-SCPU01 **Pre-Ver. 1.0**	❍	❍	❍	❍	❍	❍
NE1A-SCPU01-V1 **Unit version 1.0**	×	×	❍	❍	❍	❍
NE1A-SCPU02 **Unit version 1.0**	×	×	❍	❍	❍	❍
NE1A-SCPU01-V1 **Unit version 2.0**	×	×	❍ (*1)	❍	❍	❍
NE1A-SCPU02 **Unit version 2.0**	×	×	❍ (*1)	❍	❍	❍

***1.** It can be used as unit version 1.0.
Note 1: Users who use Network Configurator version 1.5□ or earlier can upgrade to version 1.6□ at no charge.
2: When using Network Configurator version 1.6□, there are no operational differences in the NE1A-SCPU01-V1 and NE1A-SCPU02 Safety Logic Controllers that derive from the unit version.

Configurator/Software

DeviceNet Configurator Software Version 2.□ 128
WS02-CFDC1
DeviceNet Configurator PC Card (Software Included) 128
3G8E2-DRM21-V1
DeviceNet Analyzer 130
WS02-ALDC1
NX-Server 131
WS02-NX□C1
Device Inspector 132
WS02-DIPC1

DeviceNet Configurator Software Version 2.□

WS02-CFDC1

DeviceNet Configurator PC Card (Software Included)

3G8E2-DRM21-V1

Easily Build and Maintain Multi-vendor DeviceNet Networks.

- Easily build networks using graphical screen operations.
- Make connections from a DeviceNet Card for personal computers or from a serial port.
- Monitor devices while connected online.
- Build maintenance systems with Smart Slaves.

Ordering Information

Name	Applicable OS	Model
DeviceNet Configurator Software	Windows 2000 (Service Pack2 or higher)/XP/Vista/7 (32bit) ✻1	**WS02-CFDC1-E**
DeviceNet Configurator PC Card ✻2	Windows 2000 (Service Pack2 or higher)/XP	**3G8E2-DRM21-EV1**

✻1. To use the software on Windows Vista or Windows 7, download the version upgrade program from the following OMRON website and apply it: www.fa.omron.co.jp/
✻2. The DeviceNet Configurator Software is included with the 3G8E2-DRM21-V1.

Specifications

Basic Functions	Virtual network management, device settings (I/O allocations, connection settings), device monitoring, device (EDS file) management, and online connections to DeviceNet devices
Created Files	Configurator network configuration files (*.npf) Configurator device parameter files (*.pvf)
Files created by exporting data	I/O comments: CSV-format files (*.csv) NetXServer DDE settings file (*.nxd) NetXServer ONC settings files (*.ini) ONC DRM Unit settings files (*.ini)

System Requirements

CPU	Processor recommended by Microsoft.
OS	Windows 2000 (ServicePack2 or higher)/XP/Vista/7 (32bit) *

* To use the software on Windows Vista or Windows 7, download the version upgrade program from the following OMRON website and apply it: www.fa.omron.co.jp/

Hardware for Network Connection

Either of the following software applications is required to connect online to DeviceNet devices.

OMRON DeviceNet Board
- Special PCI Board: 3G8F7-DRM21
- Special PC Card: 3G8E2-DRM21-V1

Molex DeviceNet Network Interface Cards
- USB Interface Module Part Number: 1120760001 (Old Part Number: SST-DN4-USB)

OMRON CS/CJ-series PLC equipped with DeviceNet Unit
- Peripheral port *1
- Serial communications port or Serial Communications Unit *1
- Ethernet Unit *2

*1: An RS-232C COM port is required on the computer.
*2: An Ethernet port is required on the computer.

Supported OS

Name		OS	
		2000/XP	Vista/7
DeviceNet Configurator Software		Supported	Supported
OMRON DeviceNet Board	PCI Board	Supported	Supported (32bit)
	PC Card	Supported	Not Supported
Molex DeviceNet Network Interface Cards USB Interface Module		Supported	Supported (32bit)

Building and Setting Networks

Easy to Build Networks Using Graphical Screen Operations

You can build a network and make device settings on a computer by dragging and dropping devices selected from the hardware list for virtual networks (equivalent to network configuration files) in the Configurator. Also, configurations can be downloaded to devices online and saved in files.

● **Setting Device Parameters**

You can configure a network and edit device parameters by dragging and dropping device files in the virtual network in the Configurator when it is offline. This improves design efficiency.

Hardware list　　Network Configuration Window

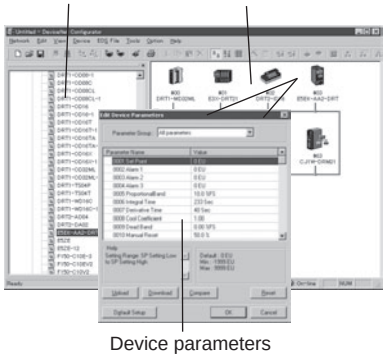

Device parameters

● **Creating a Scan List with the Wizard (Conversational Settings)**

You can use the wizard to easily allocate I/O and register Slaves to the Master to create a scan list.
And, you can easily check allocations to registered Slaves.

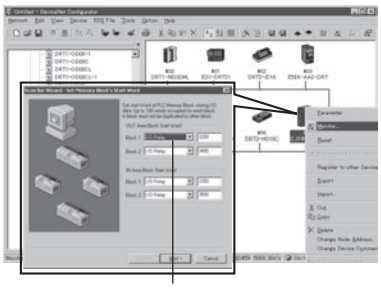

Scan List Wizard

Online Connections

Connection from a DeviceNet Board for PC or Serial Port

Connections can be made online using a DeviceNet Board, DeviceNet Card, or OMRON CS/CJ-series PLC from the computer.

- You can directly connect to DeviceNet devices by using an OMRON PCI Board or PC Card through a DeviceNet Board or DeviceNet Card. (Nodes are allocated to the Board/Card.)
- Computer RS-232C COM Port Connection
  Connections can be made using a peripheral port or a serial port on a Serial Communications Board/Unit of an OMRON CS/CJ-series PLC that has a DeviceNet Unit connected to the COM port on a computer.
- Computer Ethernet Port Connection
  Connections can be made using an Ethernet Unit of an OMRON CS/CJ-series PLC that has a DeviceNet Unit connected to the Ethernet port on a computer.

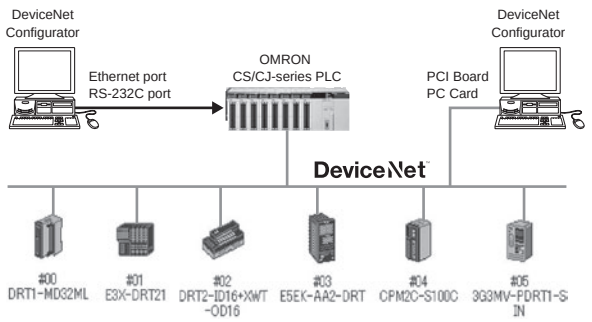

Device Management and Monitoring

Monitor Devices While Connected Online

- Support for Network Downloading and Monitoring for Devices*
  The following items can be monitored using an OMRON CS/CJ-series PLC.
  - Overall communications status of network
  - Status of Masters and Slaves
  - Unit status
  - Communications cycle time
  - Error history

✻ This applies only to devices with the monitor function.

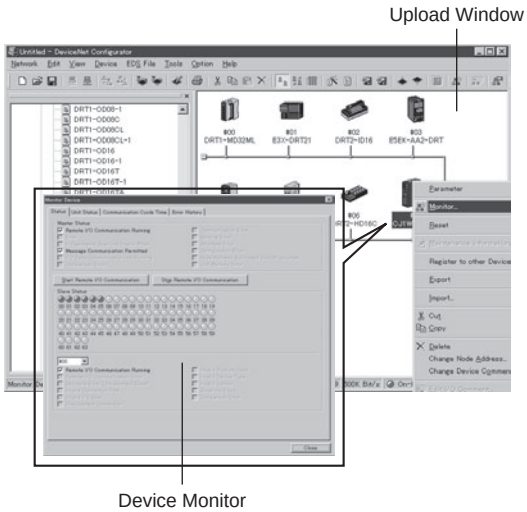

Building Maintenance Systems

Maintenance Systems Built with Smart Slaves

- Smart Slave Maintenance Information
  Maintenance information stored in Smart Slaves can be read and use to build a maintenance system that functions separately from the control system.

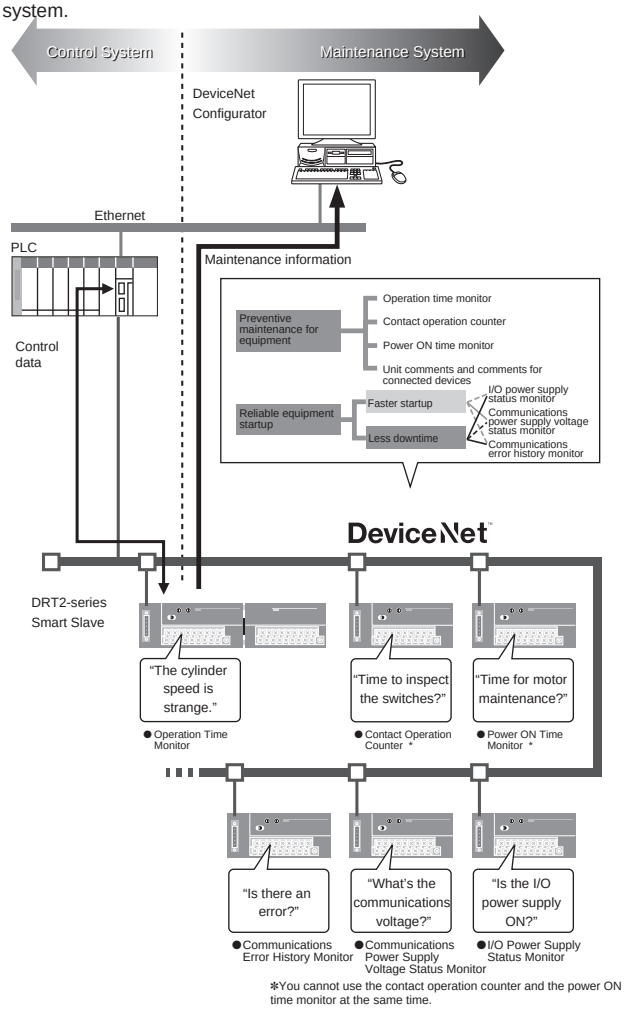

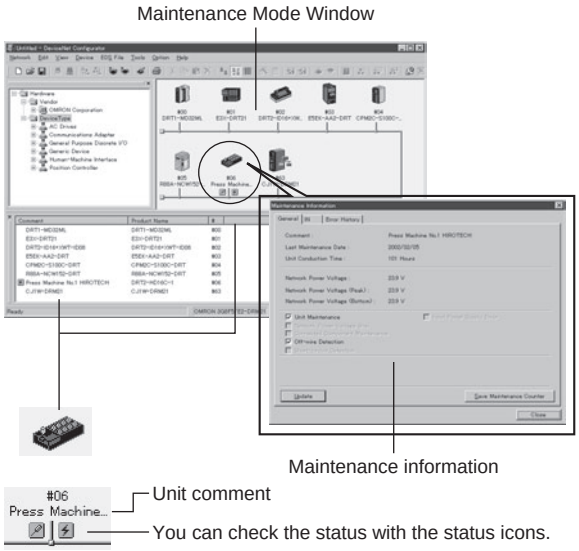

Configurator List

- Software only: WS02-CFDC1-E
- PC Card with software included: 3G8E2-DRM21-V1
  (Applicable OS: Windows 2000 (ServicePack2 or higher)/XP)

DeviceNet Analyzer

WS02-ALDC1

Perform Diagnosis and Analysis for Networks by Directly Connecting to an OMRON DeviceNet PCI Board. Helps Improve Efficiency of Device Development and System Startup.

- Capture messages frames flowing on DeviceNet.
- Translate and display the captured message frames to easily perform diagnosis and analysis.
- Functionality is provided in the capture filter to display only messages that match the specified conditions.
- Set the trigger conditions for starting and stopping capture.
- Combine multiple conditions (e.g., AND, OR, THEN) for the trigger conditions.
- Display the traffic (load percentage) in a trend graph for each time interval (100 ms) to determine changes in the communications cycle time and to help determine system distribution.
- Display the percentage of a specified message frame relative to all message frames.

System Configuration

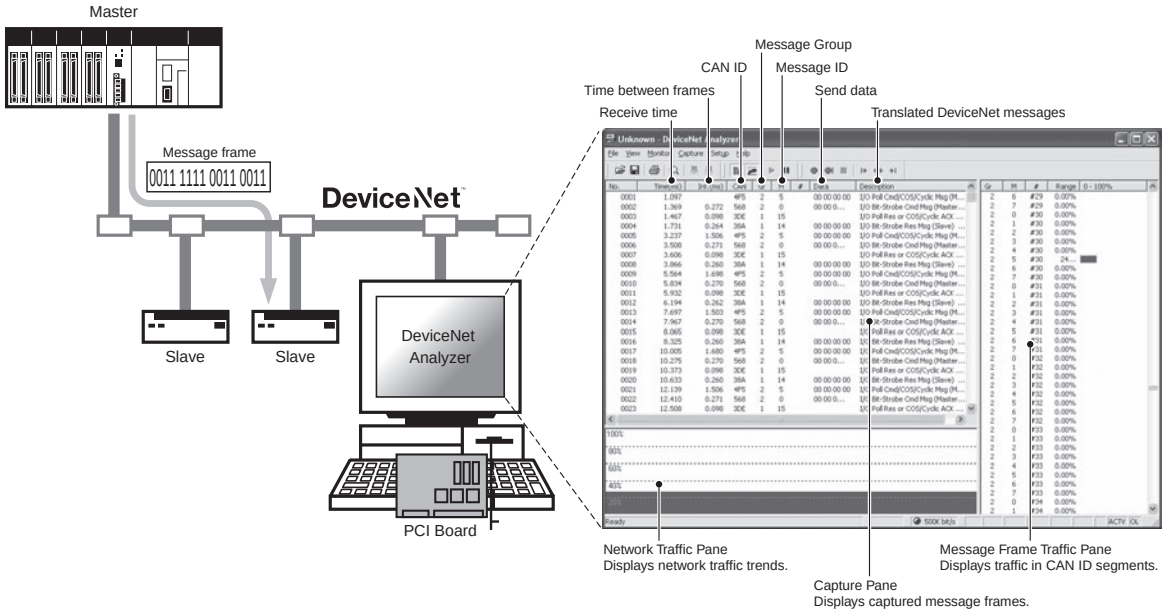

Ordering Information

Name	Applicable OS	Description	Model
DeviceNet Analyzer	Windows 2000 (Service Pack2 or higher)/XP	This software captures the required messages that flow on DeviceNet to diagnose and analyze the network.	WS02-ALDC1-E

Specifications

Basic Functions Translation, capture buffer size settings, capture filter, capture trigger, capture export, frame time measurement, network traffic monitor, message frame traffic monitor

Created files NetInspector capture files (*.alz)
Contents: Capture data files (saved or loaded), CSV-format of text (.txt) files, capture data export files

System Requirements

CPU Processor recommended by Microsoft.

OS Windows 2000 (ServicePack2 or higher)/XP

Compatible Hardware

OMRON DeviceNet Board
Special PCI Board: 3G8F7-DRM21

NX-Server

WS02-NX□C1

Easily Perform Monitoring and Logging for Various Types of I/O Data on DeviceNet.

- Monitor I/O data flowing on DeviceNet.
- Log data of specified devices using advanced triggering.
- The NX-Server is equipped with a unique frame analysis engine, and so a node is not allocated to it.
- Collect data without increasing network traffic.
- The product lineup includes a development kit for developing a DDE server and applications as well as software for operating existing user applications.

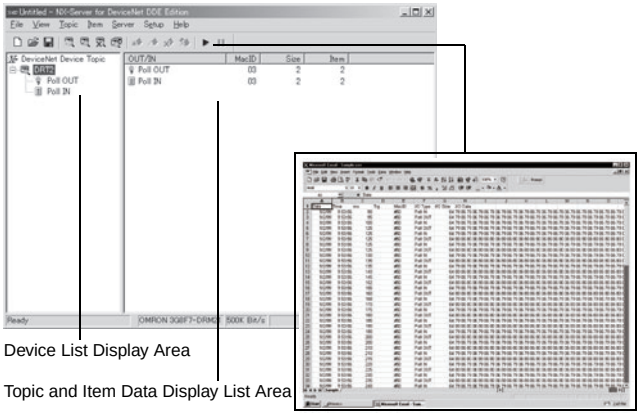

(Logging Example)

Ordering Information

Name		Applicable OS	Description	Model
NX-Server	For DeviceNet DDE Edition	Windows 2000 (Service Pack2 or higher)/XP	This software monitors and logs I/O data on DeviceNet lines.	**WS02-NXDC1-E**
	For DeviceNet SDK Edition			
	For DeviceNet RT Edition			

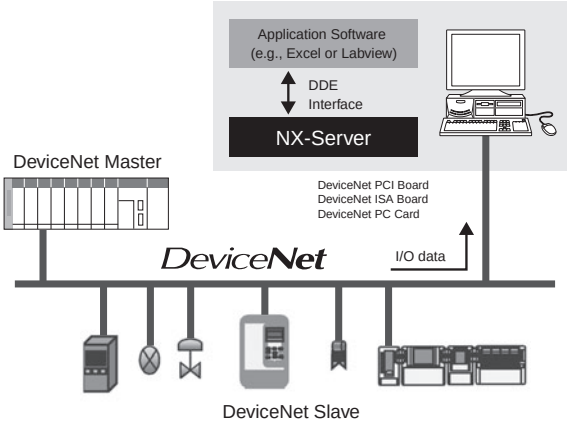

Logging

Logging can be performed by directly obtaining from the line the commands communicated between the specified Slaves and Master.
The logging data can be saved in an CSV-format file and analyzed in Excel.

- Set triggers to start logging or other processes simply by selecting device topics.
- You can set whether to perform logging for each device and also set the trigger conditions.

Monitor

Using the NX-Server, you can display in realtime the data of nodes specified in application software on a DDE interface, such as Excel.

- Display the data of all Slaves participating in a DeviceNet network.
- One optional function provided by the NX-Server lets you open a specific file (in this case, a set Excel file) at the same time that the NX-Server starts.
- Also, the NX-Server can be incorporated into monitoring software, such as Labview, in addition Excel.

NetXServer Functions

- Topic names and item names for data can be flexibly set for individual devices to monitor or log.
- Server name of DDE interface for user-disclosed interface: NETXDNET.
- The size and format (bit, byte, or word) of data can be specified.
- Whether to log data for each device and setting the trigger conditions can be performed for each device.
- Logging data can be checked in standard CSV format.
- The NX-Server is equipped with a unique frame analysis engine, and so a MAC ID is not allocated.
- Data can be collected without increasing network traffic.

Product Introduction

- The NX-Server for DeviceNet DDE Edition is a dynamic data exchange (DDE) server that provides software to collect I/O data and perform host monitoring of the collected I/O data.
- The NX-Server for DeviceNet SDK Edition is a development kit for developing applications that use core modules of NetXServer for DeviceNet.
- The NX-Server for DeviceNet RT Edition is platform software to operate user applications developed using the SDK Edition.
- The 3G8F7-DRM21 PCI Board or 3G8E2-DRM21-V1 PC Card can be used for the hardware.

System Requirements for NX-Server for DeviceNet DDE Edition

CPU	Pentium 166 MHz or better
OS	Windows 2000 (ServicePack2 or higher)/XP
Created Files	NetXServer settings files (*.nxd) Logging data: CSV-format files (*.csv)

Compatible Hardware

OMRON DeviceNet Board or Card
Special PCI Board: 3G8F7-DRM21
Special PC Card: 3G8E2-DRM21-V1 *

* The hardware is included with the Configurator.
The applicable OS depends on the hardware. Check the requirements before operation.

Device Inspector

WS02-DIPC1

Software for Monitoring the Status of Devices on DeviceNet and Detecting Errors.

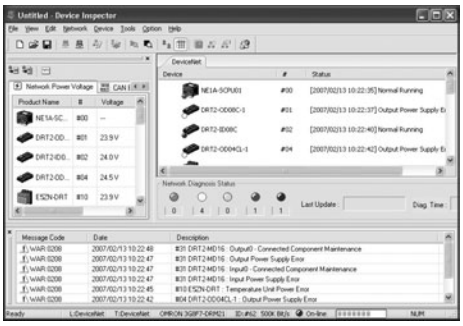

- Easily access the status of devices and present error details.
- View all CAN errors held by devices.
- Monitor device participation and withdrawal.
- Display error detection data with a time stamp and save the data to a file.
- Use a graph display of the network power supply voltage to monitor changes.

Ordering Information

Name	Applicable OS		Description	Model
Device Inspector	Windows 2000 (ServicePack2 or higher)/XP	One-license version Media: CD	Software for monitoring the status of devices on a network and detecting errors.	**WS02-DIPC1-E**
		Site license		**WS02-DIPC1-ELXX**

Device Inspector Functions

Function	Description
Network diagnosis	Reads the status of network devices and monitors errors.
Device monitor	Enables monitoring the status of devices.
Maintenance	Enables displaying maintenance information for DeviceNet.
CAN error monitor	Monitors device CAN error data for DeviceNet.
Network power supply voltage monitor	Monitors device network power supply voltage for DeviceNet.
Message timeout monitor	Records the number of message timeouts for devices.
Error history	Leaves a record of error occurrence and recovery in a log.

System Requirements

CPU	Processor recommended by Microsoft.
OS	Windows 2000 (ServicePack2 or higher)/XP
Available hard disk space	50 MB min.
Memory	256 MB min.
Disk device	One CD-ROM drive
Display	SVGA or higher display

Communications Port

Online connection using serial port	RS-232C port
Online connection using USB port	USB port
Online connection using Ethernet	Ethernet port
Online connection using DeviceNet	DeviceNet Interface Card (3G8F7-DRM21 or 3G8E2-DRM21-V1 *)

* The hardware is included with the Configurator.
The applicable OS depends on the hardware. Check the requirements before operation.

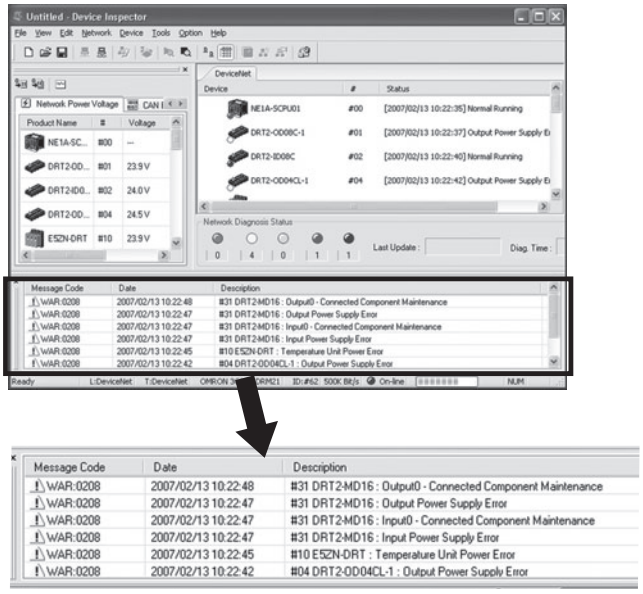

Error History Window

Peripheral Devices

General-purpose Peripheral Devices..... 134

Peripheral Devices for DeviceNet Communications

- General-purpose Models
- Peripheral Devices for Flat Cables

I/O Peripheral Devices

■ I/O Connectors for Connector Terminals
- MIL Connectors

■ I/O Connectors for MULTIPLE I/O TERMINALs

■ I/O Connector for Programmable Slaves

Peripheral Devices for Environment-resistive Slaves..... 144

Peripheral Devices for DeviceNet Communications

- Environment-resistive Connection Products (for Thin Cable, M12 Micro Connectors)
- Environment-resistive Models (for Thin Wires and M12 Micro Connectors)
- Environment-resistive Models for Thick Wires with 7/8-16UN Mini Connectors

I/O Peripheral Devices

- Assembly Connector Plugs for M12 Microconnectors
- Cables with Connector (Socket/Plug) on Both Ends (M12 Microconnectors for Power Supply and I/O)
- Cables with connector plug on One End (M12 Microconnectors for I/O)
- Plugs and Sockets on Y-shaped Joints (M12 Microconnectors for I/O)
- Connector Cover for M12 Microconnectors

Power Supply Peripheral Devices

- Power Supply Connectors (7/8-16UN Miniconnectors)

Peripheral Devices

General-purpose Peripheral Devices

Peripheral Devices for DeviceNet Communications

Ordering Information

● **General-purpose Models**

Product	Appearance	Model	Specifications	
T-branch Tap for 1 branch line		**DCN1-1NC**	Cable wiring direction: Toward top Cable lock direction: From top Connector screw direction: From top	Provided with 3 parallel connectors with clamps (XW4G-05C1-H1-D), standard terminating resistor
	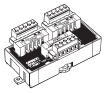	**DCN1-1C**	Cable wiring direction: Toward side Cable screw direction: From top Connector screw direction: From side	Provided with 3 parallel connectors with screws (XW4B-05C1-H1-D), standard terminating resistor
	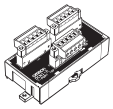	**DCN1-2C**	Cable wiring direction: Toward top Cable screw direction: From side Connector screw direction: From top	
	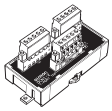	**DCN1-2R**	Cable wiring direction: Toward side Cable screw direction: From top Connector screw direction: From top	Provided with 3 orthogonal connectors with screws (XW4B-05C1-V1R-D), standard terminating resistor
T-branch Tap for 3 branch lines	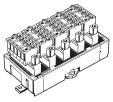	**DCN1-3NC**	Cable wiring direction: Toward top Cable lock direction: From top Connector screw direction: From top	Provided with 5 parallel clamp connectors with screws (XW4G-05C1-H1-D), standard terminating resistor
	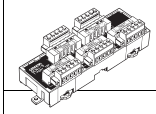	**DCN1-3C**	Cable wiring direction: Toward side Cable screw direction: From top Connector screw direction: From side	Provided with 5 parallel connectors with screws (XW4B-05C1-H1-D), standard terminating resistor
	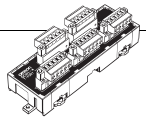	**DCN1-4C**	Cable wiring direction: Toward top Cable screw direction: From side Connector screw direction: From top	
	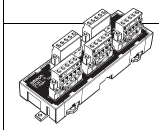	**DCN1-4R**	Cable wiring direction: Toward side Cable screw direction: From top Connector screw direction: From top	Provided with 5 orthogonal clamp connectors with screws (XW4B-05C1-V1R-D), standard terminating resistor
Power Supply Tap	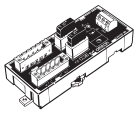	**DCN1-1P**	Tap provided with 2 connectors, standard terminating resistor, and fuse	

Product		Appearance	Model	Specifications
Connectors			**XW4G-05C1-H1-D**	Parallel clamp connector with screws Connector insertion and wiring both performed horizontally.
			XW4G-05C4-TF-D	Parallel multi-branching clamp connector with screws Connector insertion and wiring performed in same direction.
		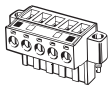	**XW4B-05C1-H1-D**	Parallel connector with screws Connector insertion and wiring performed in same direction.
			XW4B-05C4-T-D	Parallel, screw-less, multi-branching connector Connector insertion and wiring performed in same direction.
		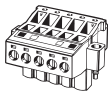	**XW4B-05C4-TF-D**	Parallel, multi-branching connector with screws Connector insertion and wiring performed in same direction.
		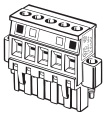	**XW4B-05C1-V1R-D**	Orthogonal connector with screws Connector insertion and wiring performed at a right angle.
DeviceNet Standard Cables	Thin Cables		**DCA1-5C10(-B)**	Outer diameter: 7.00 mm Length: 100 m DCA1-5C10-B: Cable color: Blue DCA1-5C10: Cable color: Gray
	Thick Cables		**DCA2-5C10(-B)**	Outer diameter: 11.6 mm Length: 100 m DCA2-5C10-B: Cable color: Blue DCA2-5C10: Cable color: Gray
Terminal-block Terminator		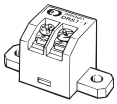	**DRS1-T**	Resistance of 121 Ω

● Peripheral Devices for Flat Cables

Product	Appearance	Model	Specifications
Conversion Connector for Standard Thin Cable and Flat Cable		**DCN4-BR4D**	Used as a set with a DCN4-TR4 when Thin Cable is branched on a branch line.
Power Supply Terminal Block with Terminating Resistance for Flat Cable		**DCN4-TP4D**	Can be used to supply communications power from terminals when Flat Cable is used.
Flat Connector Socket	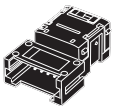	**DCN4-TR4**	Used as a set with a DCN4-BR4 Flat Connector Plug in the following applications. • Extending the trunk line • T-branching the trunk line into branch lines Used alone in the following applications. • Connecting a DCN4-TM4 Terminating Resistor to the trunk line
Flat Connector Plug	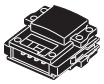	**DCN4-BR4**	Used as a set with a DCN4-TR4 Flat Connector Socket in the following applications. • Extending the trunk line • T-branching the trunk line into branch lines
Terminating Resistor	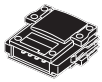	**DCN4-TM4**	Connector terminating resistor for flat cable. Attached to the DCN4-TR4 Flat Connector Socket at the end of the trunk line.
Flat Cable	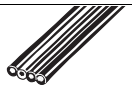	**DCA4-4F10**	Four-core flat cable (UL 2555) Length: 100 m Conductor diameters: 0.75 mm^2 x 2, 0.5 mm^2 x 2
Simple Manual Crimp Tool		**DWT-A01**	This is the crimping tool for the following connectors: • DCN4-TR4(-1) Flat Connector Socket • DCN4-BR4 Flat Connector Plug • DCN4-BR4D Conversion Connector for Standard Thin Cable and Flat Cable

Specifications

● General-purpose Models (T-branch Taps)

Rated current	Between main lines: 8 A (power supply line) and 2 A (signal line)
	Between main and branch lines: 3 A (power supply line) and 1 A (signal line)
Insulation resistance	100 MΩ min. (at 500 VDC)
Dielectric strength	500 VAC for 1 min, leakage current: 1 mA max.
Ambient operating temperature	0°C to 55°C

Dimensions

(Unit: mm)

● General-purpose Models

T-branch Tap for 1 branch line DCN1-1NC (With Three Branching Connectors)

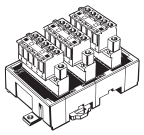

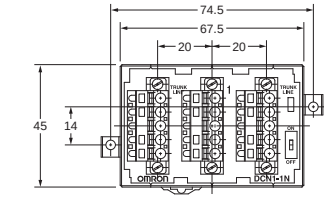

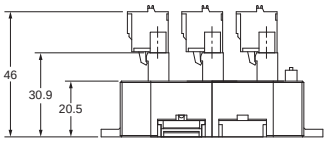

Mounting Dimensions

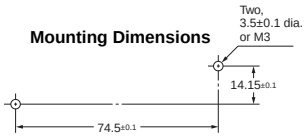

Internal Circuit

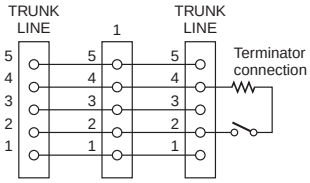

Terminal No.	Name
1	V-
2	CAN L
3	DRAIN
4	CAN H
5	V+

T-branch Tap for 1 branch line DCN1-1C (With Three Branching Connectors)

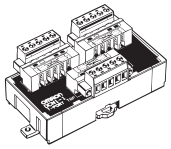

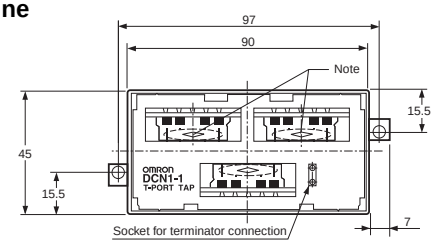

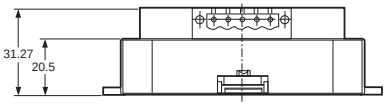

Mounting Dimensions

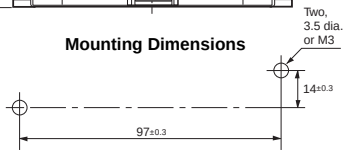

Internal Circuit

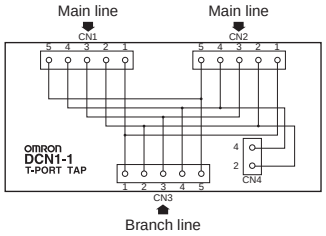

Terminal No.	Name
1	V-
2	CAN L
3	DRAIN
4	CAN H
5	V+

Note: When connecting a branch line to the main line, connect the main line to the connector marked with an asterisk because the resistance between the asterisks is minimal.

T-branch Tap for 3 branch lines DCN1-3NC (With Five Branching Connectors)

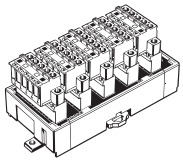

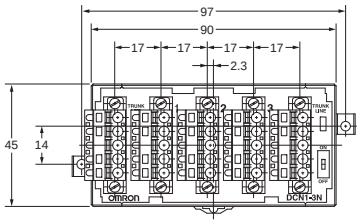

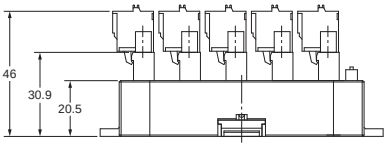

Mounting Dimensions

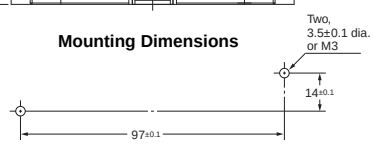

Internal Circuit

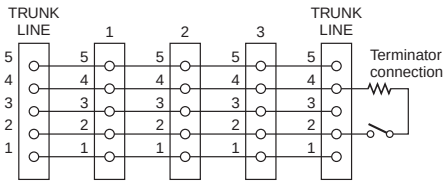

Terminal No.	Name
1	V-
2	CAN L
3	DRAIN
4	CAN H
5	V+

T-branch Tap for 3 branch lines DCN1-3C (With Five Branching Connectors)

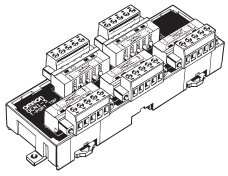

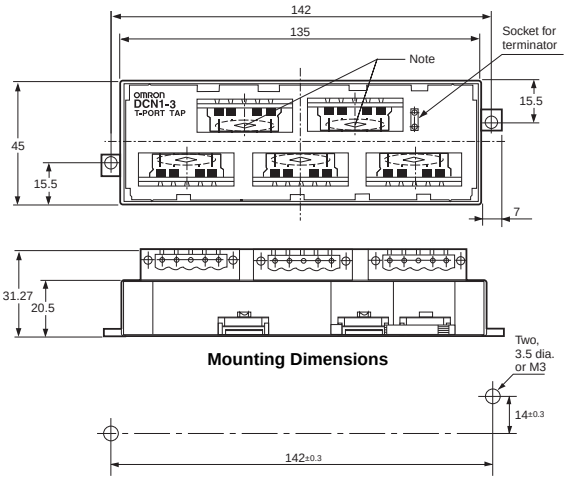

Mounting Dimensions

Note: When connecting a branch line to the main line, connect the main line to the connector marked with an asterisk because the resistance between the asterisked portion is minimal.

Internal Circuit

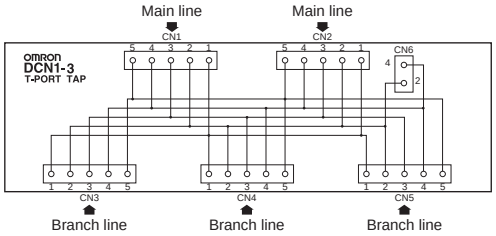

Terminal No.	Name
1	V-
2	CAN L
3	DRAIN
4	CAN H
5	V+

Power Supply Tap DCN1-1P (With Two Branching Connectors)

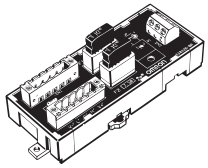

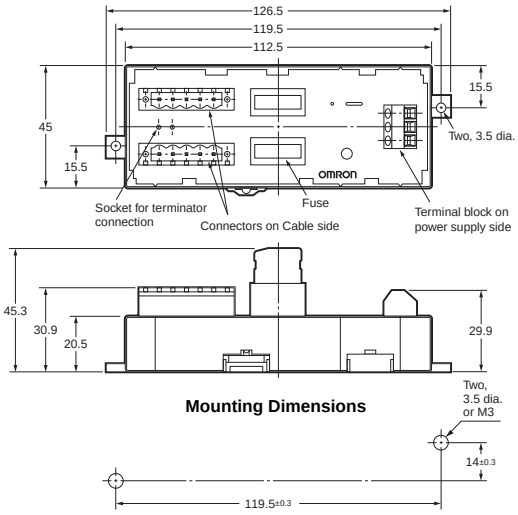

Mounting Dimensions

Internal Circuit

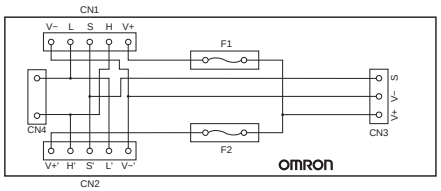

Terminal No.	Name
V-	V-
L	CAN L
S	DRAIN
H	CAN H
V+	V+

DRS1-T (Terminal-block Terminator)

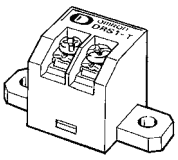

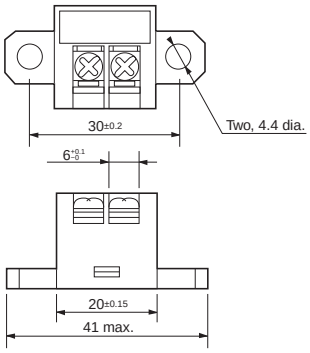

Mounting Dimensions

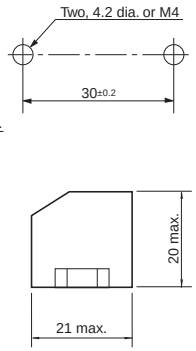

● Flat Cable

Conversion Connector for Standard Thin Cable and Flat Cable
DCN4-BR4D

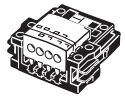

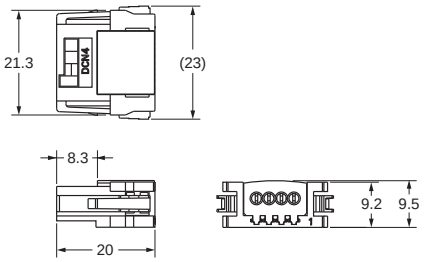

Power Supply Terminal Block with Terminating Resistance for Flat Cable
DCN4-TP4D

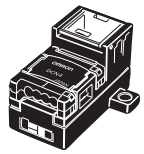

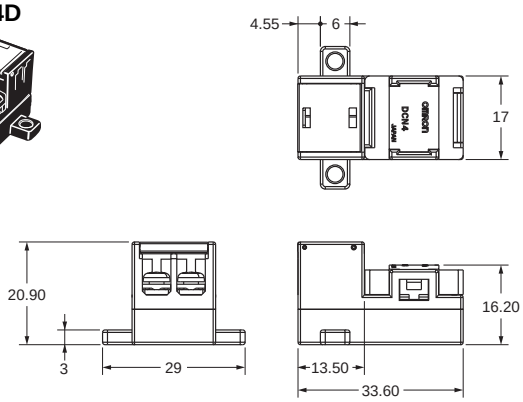

Flat Connector Socket
DCN4-TR4

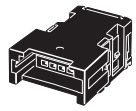

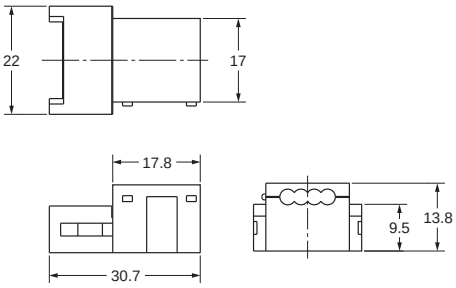

Flat Connector Plug
DCN4-BR4

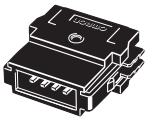

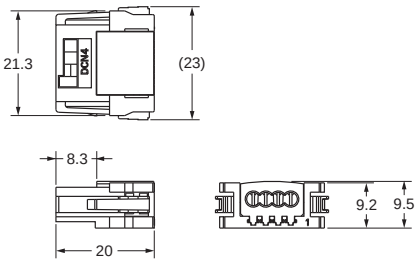

I/O Peripheral Devices

■ I/O Connectors for Connector Terminals

●MIL Connectors

Applicable Connectors

Type		Model	Remarks
Flat Cable Pressure-welded Connectors		**XG4M-4030-T**	
Pressure-welded Connectors with Loose Wires	Socket	**XG5M-4032-N**	Corresponding to 24 AWG
		XG5M-4035-N	Corresponding to 28 to 26 AWG
	Semicover	**XG5S-2001**	
	Hood Cover *	**XG5S-4022**	

✻ DeviceNet connectors for multi-drop wiring cannot be used with the Hood Cover.

Cable Models

Type	Model	Connected device	Applicable models
Cable with Connectors (1:2)	**XW2Z-RI□□-□□-D1**	G7TC/G70D/G70A	DRT2-ID32ML
	XW2Z-RM□□-□□-D1		DRT2-MD32ML
	XW2Z-RO□□-□□-D1		DRT2-OD32ML/DRT1-OD32ML-1
	XW2Z-RI□□-□□-D2		DRT2-ID32ML-1
	XW2Z-RM□□-□□-D2		DRT2-MD32ML-1
Cable with Connector (1:1)	**XW2Z-C□□K**	--	All models
Cable with Loose Wires with Crimp Terminals	**XW2Z-RY□00C-D1**		
Cable with Loose Wires	**XW2Z-RA□00C-D1**		

Applicable Cables with Connectors

● Cables with Connectors (1-to-2 Connection)/XW2Z-R□□-□-D□

Appearance	Cable length (mm)			Model
		Ⓐ	Ⓑ	
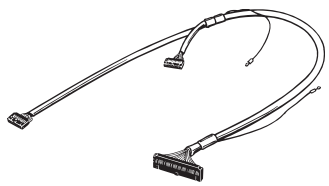	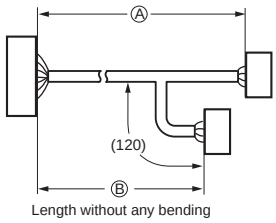	500	250	**XW2Z-RI50-25-D1**
		750	500	**XW2Z-RI75-50-D1**
		500	250	**XW2Z-RO50-25-D1**
		750	500	**XW2Z-RO75-50-D1**
		500	250	**XW2Z-RM50-25-D1**
		750	500	**XW2Z-RM75-50-D1**
		500	250	**XW2Z-RI50-25-D2**
		750	500	**XW2Z-RI75-50-D2**
		500	250	**XW2Z-RM50-25-D2**
		750	500	**XW2Z-RM75-50-D2**

● Cables with Connectors (1-to-1 Connection)/XW2Z-C□□K

Appearance	Cable length (mm)		Model
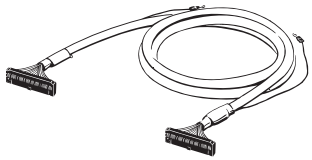	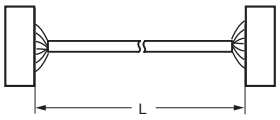	250	**XW2Z-C25K**
		500	**XW2Z-C50K**

● Cables with Crimp Terminals (at the End of Loose Wires)/XW2Z-RY□C-D1

Appearance	Cable length (mm)		Model
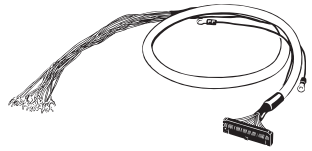	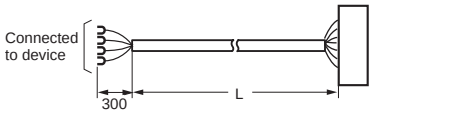	1,000	**XW2Z-RY100C-D1**
		2,000	**XW2Z-RY200C-D1**
		5,000	**XW2Z-RY500C-D1**

● Cables with Loose Wires/XW2Z-RA□C

Appearance	Cable length (mm)		Model
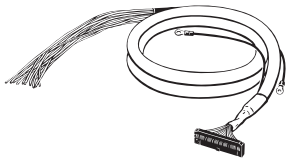	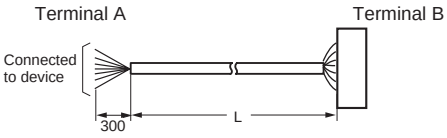	2,000	**XW2Z-RA200C-D1**
		5,000	**XW2Z-RA500C-D1**

■ I/O Connectors for MULTIPLE I/O TERMINALs

Applicable Connectors

Type			Model	Remark	Connectable model
Molex connector	Crimped terminals	Housing	**50-57-9403**		Digital I/O Units GT1-ID16MX(-1)/GT1-OD16MX(-1) Analog I/O Units GT1-AD08MX/GT1-DA04MX
		Chain terminal	**16-02-0069**	Corresponding to 24 to 30 AWG	
			16-02-0086	Corresponding to 22 to 24 AWG	
		Loose terminal	**16-02-0096**	Corresponding to 24 to 30 AWG	
			16-02-0102	Corresponding to 22 to 24 AWG	
		Press-fit tool	**57036-5000**	Corresponding to 22 to 26 AWG	
			57037-5000	Corresponding to 24to 30 AWG	
Fujitsu connector (16 points)	Soldered terminals		**FCN361J024-AU**		
	Pressure-welded terminals		**FCN367J024-AU/F**		
	Crimped terminals		**FCN363J024-AU**		
Fujitsu connector (32 points)	Soldered terminals		**FCN361J040-AU**		Digital I/O Units GT1-ID32ML(-1)/GT1-OD32ML(-1)
	Pressure-welded terminals		**FCN367J040-AU/F**		
	Crimped terminals		**FCN363J040-AU**		
OMRON D-sub connector	Pulg		**XM3A-2521**		Digital I/O Units GT1-ID16DS(-1)/GT1-OD16DS(-1)
	Hood		**XM2S-2513**	#4-40UNC inch screws	

Applicable Cables with Connectors (Fujitsu Connectors)

I/O classification	Model	Connectable model
Digital input, 16 points	**XW2Z-□□□A**	Digital I/O Units GT1-ID16ML(-1)
	XW2Z-R□C	
Digital output, 16 points	**XW2Z-□□□A**	Digital I/O Units GT1-OD16ML(-1)
	XW2Z-R□C	
Digital input, 32 points	**XW2Z-□□□B**	Digital I/O Units GT1-ID32ML(-1)
	XW2Z-RI□C□	
Digital output, 32 points	**XW2Z-□□□B**	Digital I/O Units GT1-OD32ML(-1)
	XW2Z-RO□C□	

● Cables with Connectors (1-to1 Connection)/XW2Z-R□C
For Digital Input/Output (16 Points)

Appearance	Cable length (mm)	Model
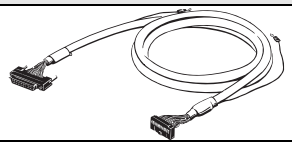	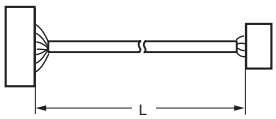 1,000	**XW2Z-R100C**
	1,500	**XW2Z-R150C**
	2,000	**XW2Z-R200C**
	3,000	**XW2Z-R300C**
	5,000	**XW2Z-R500C**

● Cables with Connectors (1-to-2 Connection)/XW2Z-RO□C-□, XW2Z-RI□C-□
For Digital Input/Output (32 Points)

Appearance	Cable length (mm)			Model	
		Ⓐ	Ⓑ	Input	Output
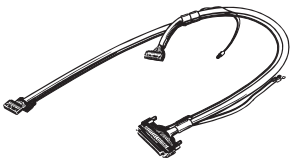	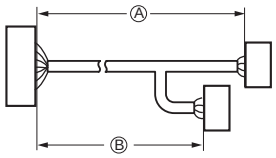 Length without any bending	1,000	750	**XW2Z-RI100C-75**	**XW2Z-RO100C-75**
		1,500	1,250	**XW2Z-RI150C-125**	**XW2Z-RO150C-125**
		2,000	1,750	**XW2Z-RI200C-175**	**XW2Z-RO200C-175**
		3,000	2,750	**XW2Z-RI300C-275**	**XW2Z-RO300C-275**
		5,000	4,750	**XW2Z-RI500C-475**	**XW2Z-RO500C-475**

For Digital Input/Output (16 Points)

Appearance	Cable length (mm)	Model
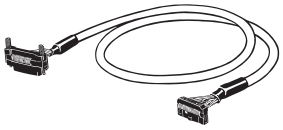	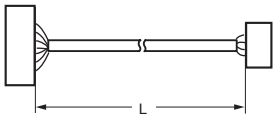 500	**XW2Z-050A**
	1,000	**XW2Z-100A**
	1,500	**XW2Z-150A**
	2,000	**XW2Z-200A**
	3,000	**XW2Z-300A**
	5,000	**XW2Z-500A**

For Digital Input/Output (32 Points)

Appearance	Cable length (mm)	Model
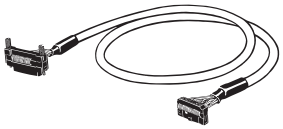	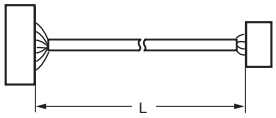 500	**XW2Z-050B**
	1,000	**XW2Z-100B**
	1,500	**XW2Z-150B**
	2,000	**XW2Z-200B**
	3,000	**XW2Z-300B**
	5,000	**XW2Z-500B**

■ I/O Connector for Programmable Slaves

Applicable Connector Terminal Conversion Units

Applicable cable	Connected product	Connector Products (Connector-Terminal Block Conversion Units) Connecting method
XW2Z-□□□A	**XW2R-J20G-T**	Phillips screw M3
	XW2R-E20G-T	Slotted screw M3
	XW2R-P20G-T	Push-in spring

Applicable Cables with Connectors

● Cables with Connectors/XW2Z

For Digital Input/Output (16 Points)

Appearance	Cable length (mm)		Model
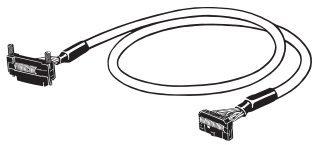	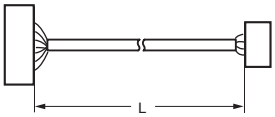	500	**XW2Z-050A**
		1,000	**XW2Z-100A**
		1,500	**XW2Z-150A**
		2,000	**XW2Z-200A**
		3,000	**XW2Z-300A**
		5,000	**XW2Z-500A**

Peripheral Devices for Environment-resistive Slaves

Peripheral Devices for DeviceNet Communications

Ordering Information

● Environment-resistive Connection Products (for Thin Cable, M12 Micro Connectors)

Product	Appearance	Model	Specifications	
Sealed Assembling-type Connector (male)		**XS2G-D5S7**	For communications (plug)	
Sealed Assembling-type Connector (female)		**XS2C-D5S7**	For communications (socket)	
Sealed T-branch Connector	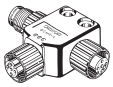	**DCN2-1**	For 1 branch line	
Sealed Connector with Terminating Resistor		**DRS2-1**	Plug	
		DRS2-2	Socket	
Cables with Sealed Connectors ✻	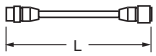	**DCA1-5CNC5W1**	Length (L): 0.5 m	Cable with connectors on both ends
		DCA1-5CN01W1	Length (L): 1 m	
		DCA1-5CN02W1	Length (L): 2 m	
		DCA1-5CN03W1	Length (L): 3 m	
		DCA1-5CN05W1	Length (L): 5 m	
		DCA1-5CN10W1	Length (L): 10 m	
	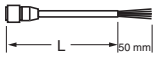	**DCA1-5CNC5F1**	Length (L): 0.5 m	Cable with connector on one end (socket)
		DCA1-5CN01F1	Length (L): 1 m	
		DCA1-5CN02F1	Length (L): 2 m	
		DCA1-5CN03F1	Length (L): 3 m	
		DCA1-5CN05F1	Length (L): 5 m	
		DCA1-5CN10F1	Length (L): 10 m	
	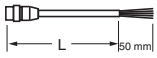	**DCA1-5CNC5H1**	Length (L): 0.5 m	Cable with connector on one end (plug)
		DCA1-5CN01H1	Length (L): 1 m	
		DCA1-5CN02H1	Length (L): 2 m	
		DCA1-5CN03H1	Length (L): 3 m	
		DCA1-5CN05H1	Length (L): 5 m	
		DCA1-5CN10H1	Length (L): 10 m	
Shielded Panel-mounting Connectors (female)		**DCA1-5CNC5P1**	Panel-mounting connector (socket) with 0.5-m cable	
		XS2P-D522-2	Panel-mounting connector socket	
Shielded Panel-mounting Connectors (male)		**DCA1-5CNC5M1**	Panel-mounting connector (plug) with 0.5-m cable	
		XS2M-D524-4	Panel-mounting connector (plug) with solder-cup terminals	
Waterproof cover (for socket)		**XS2Z-22**	Used to cover an unused connector section	
Dust cover (for socket)		**XS2Z-15**		

✻ Robot cable type connectors with shielded cables (DCA1-5CN□□□1-R) are also available. Contact your OMRON sales representative for details.

● Environment-resistive Models (for Thin Wires and M12 Micro Connectors) Smartclick

Product	Appearance		Model	Specifications	
Sealed T-branch Connector	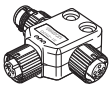		**DCN2-1S**	For 1 branch line	
Sealed Assembling type Connector (female)			**DRS2-1S**	Plug	
			DRS2-2S	Socket	
Connectors with Shielded Cables ✻		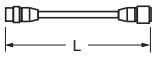	**DCA1-5CSC5W1**	Length (L): 0.5 m	Cable with connectors on both ends
			DCA1-5CS01W1	Length (L): 1 m	
			DCA1-5CS02W1	Length (L): 2 m	
			DCA1-5CS03W1	Length (L): 3 m	
			DCA1-5CS05W1	Length (L): 5 m	
			DCA1-5CS10W1	Length (L): 10 m	
		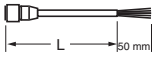	**DCA1-5CSC5F1**	Length (L): 0.5 m	Cable with connector on one end (socket)
			DCA1-5CS01F1	Length (L): 1 m	
			DCA1-5CS02F1	Length (L): 2 m	
			DCA1-5CS03F1	Length (L): 3 m	
			DCA1-5CS05F1	Length (L): 5 m	
			DCA1-5CS10F1	Length (L): 10 m	
		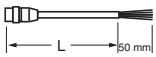	**DCA1-5CSC5H1**	Length (L): 0.5 m	Cable with connector on one end (plug)
			DCA1-5CS01H1	Length (L): 1 m	
			DCA1-5CS02H1	Length (L): 2 m	
			DCA1-5CS03H1	Length (L): 3 m	
			DCA1-5CS05H1	Length (L): 5 m	
			DCA1-5CS10H1	Length (L): 10 m	
Shielded Branch Relay Box			**DCN2-S4C5H1**	4 ports, 0.5-m cable	
			DCN2-S8C5H1	8 ports, 0.5-m cable	

✻ Robot cable type connectors with shielded cables (DCA1-5CN□□□1-R) are also available. Contact your OMRON sales representative for details.

● Environment-resistive Models for Thick Wires with 7/8-16UN Mini Connectors

Product	Appearance		Model	Specifications	
Sealed T-branch Connector	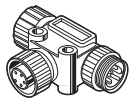		**DCN3-11**	T-branch Connector	
	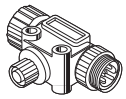		**DCN3-12**	T-branch Connector (Branch connector is M12.)	
Sealed Connector with Terminating Resistor			**DRS3-1**	Plug	
Cables with Sealed Connectors		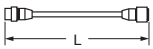	**DCA2-5CN01W1**	Length (L): 1 m	Cable with connectors on both ends
			DCA2-5CN02W1	Length (L): 2 m	
			DCA2-5CN05W1	Length (L): 5 m	
			DCA2-5CN10W1	Length (L): 10 m	
		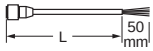	**DCA2-5CN01F1**	Length (L): 1 m	Cable with connector on one end (socket)
			DCA2-5CN02F1	Length (L): 2 m	
			DCA2-5CN05F1	Length (L): 5 m	
			DCA2-5CN10F1	Length (L): 10 m	
		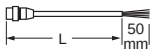	**DCA2-5CN01H1**	Length (L): 1 m	Cable with connector on one end (plug)
			DCA2-5CN02H1	Length (L): 2 m	
			DCA2-5CN05H1	Length (L): 5 m	
			DCA2-5CN10H1	Length (L): 10 m	
		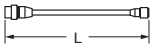	**DCA1-5CN01W5**	Length (L): 1 m	Cable with connectors on both ends Thin cable M12 socket
			DCA1-5CN02W5	Length (L): 2 m	
			DCA1-5CN05W5	Length (L): 5 m	
			DCA1-5CN10W5	Length (L): 10 m	
Panel-mounting Connector (female)			**DCA2-5CNC5P1**	Panel-mounting connector (socket) with 0.5-m cable	
Panel-mounting Connector (male)			**DCA2-5CNC5M1**	Panel-mounting connector (plug) with 0.5-m cable	
Panel-mounting Connector (male)			**XS4M-D521-1**	Panel-mounting connector (plug) DIP terminals	
Waterproof Cap (for Plug)	-		**XS4Z-11**	Used to cover an unused connector section.	
Waterproof Cap (for Socket)	-		**XS4Z-12**		

Specifications

● Environment-resistive Connection Products (for Thin Cable, M12 Micro Connectors)

Type / Item	Connectors with Cables DCA1-5CN□□□1	T-branch Connector DCN2-1	Assembling-type Connector XS2□-D5S7	Connectors with Terminating Resistor DRS2-□
Rated current	3 A			
Rated voltage	125 VDC			
Contact resistance (connector)	40 mΩ max. (at 20 mVDC max. and 100 mA max.)			
Insulation resistance	1,000 MΩ min. (at 500 VDC)			
Dielectric strength (connector)	1,500 VAC for 60 seconds (leakage current: 1 mA max.)			
Ambient operating temperature	-20°C to 65°C ✻			
Storage temperature range	-25°C to 70°C			
Degree of protection	IEC IP67			
Insertion durability	200 times			
Cable strength	98 N for 15 s	--		
Vibration resistance	No current interruptions of more than 1 μs while performing simple vibrations at either 10 to 500 Hz with 1.52-mm full amplitude or at acceleration 100 m/s², whichever is smaller			

✻ Use the robot cable within a temperature range between 0°C and 65°C to prevent the wires inside the cable from being broken when bending it.

● Environment-resistive Models (for Thin Wires and M12 Micro Connectors)

Type / Item	Connectors with Cables DCA1-5CS□□□1	T-branch Connector DCN2-1S	Connectors with Terminating Resistor DRS2-□S	Branch Relay Box DCN2-S□C5H
Rated current	3 A			
Rated voltage	125 VDC			
Contact resistance (connector)	40 mΩ max. (at 20 mVDC max. and 100 mA max.)			
Insulation resistance	1,000 MΩ min. (at 500 VDC)			
Dielectric strength (connector)	1,500 VAC for 60 seconds (leakage current: 1 mA max.)			1,000 VAC for 60 seconds
Ambient operating temperature	-20°C to 65°C ✻			
Storage temperature range	-25°C to 70°C			
Degree of protection	IEC IP67			
Insertion durability	200 times			
Cable strength	98 N for 15 s	--		
Vibration resistance	No current interruptions of more than 1 μs while performing simple vibrations at either 10 to 500 Hz with 1.52-mm full amplitude or at acceleration 100 m/s², whichever is smaller			
Lock strength	Pulling: 100 N/15 s, Rotating: 1 N·m/15 s			
Lock force	0.1 to 0.25 N·m			

✻ Use the robot cable within a temperature range between 0°C and 65°C to prevent the wires inside the cable from being broken when bending it.

● Environment-resistive Models for Thick Wires with 7/8-16UN Mini Connectors

Type / Item	Connectors with Thick Cables DCA2-5CN□□□1	Connectors with Thin Cables DCA1-5CN□□W5	T-branch Connector DCN3-11	T-branch Connector DCN3-12	Connectors with Terminating Resistor DRS3-1	Panel Mounting Connector DCA2-5CNC5P1	Panel Mounting Connector XS4M-D521-1
Rated current	8 A	3 A	8 A	3 A ✻1	8 A		
Rated voltage	125 VDC						
Contact resistance (connector)	30 mΩ max. (at 20 mVDC max. and 100 mA max.)						
Insulation resistance	1,000 MΩ min. (at 500 VDC)						
Dielectric strength (connector)	1,500 VAC for 60 seconds (leakage current: 1 mA max.)						
Ambient operating temperature	-20°C to 65°C ✻2						
Storage temperature range	-25°C to 70°C						
Degree of protection	IEC IP67						
Insertion durability	200 times						
Cable strength	98 N for 15 s		--			98 N for 15 s	--
Vibration resistance	No current interruptions of more than 1 μs while performing simple vibrations at either 10 to 500 Hz with 1.52-mm full amplitude or at acceleration 100 m/s², whichever is smaller						

✻1. The rated current between thick wires is 8 A.
✻2. Use the robot cable within a temperature range between 0 °C and 65 °C to prevent the wires inside the cable from being broken when bending it.

Dimensions

● Environment-resistive Connection Products (for Thin Cable, M12 Micro Connectors)

Cables with Connectors on Both Ends
DCA1-5CN□□W1

Wiring

Terminal No.	Color	Name
1	-	DRAIN
2	Red	V+
3	Black	V-
4	White	CAN H
5	Blue	CAN L

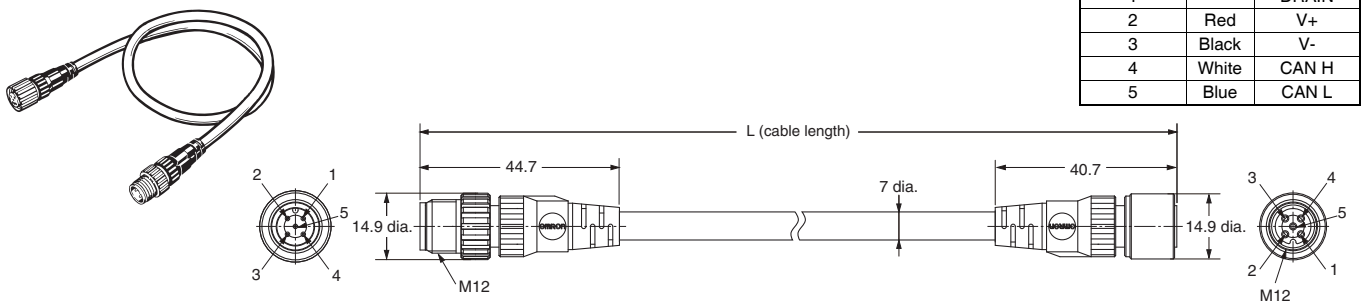

Cables with Connector on Single End (Socket)
DCA1-5CN□□F1

Wiring

Terminal No.	Color	Name
1	-	DRAIN
2	Red	V+
3	Black	V-
4	White	CAN H
5	Blue	CAN L

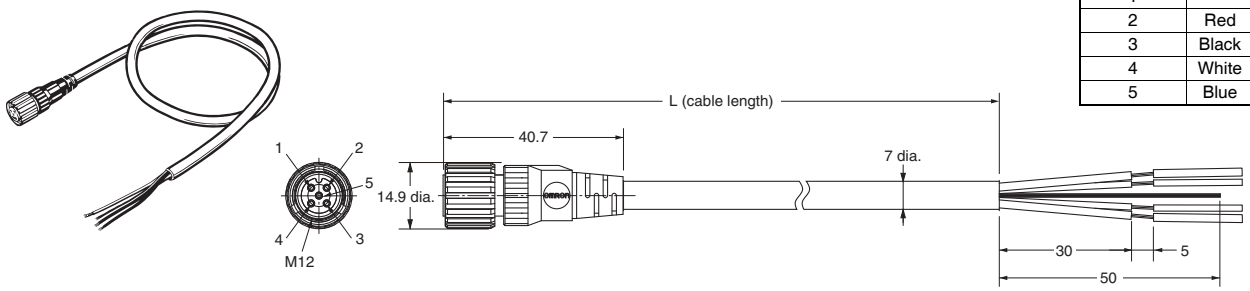

Cables with Connector on Single End (Plug)
DCA1-5CN□□H1

Wiring

Terminal No.	Color	Name
1	-	DRAIN
2	Red	V+
3	Black	V-
4	White	CAN H
5	Blue	CAN L

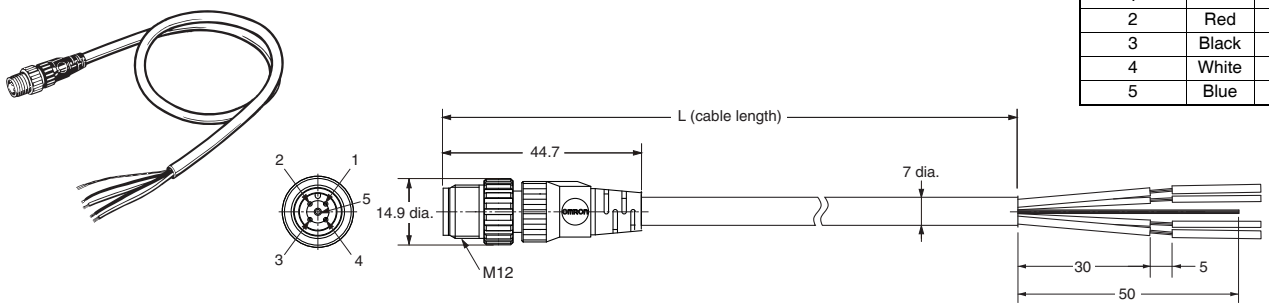

T-branch Connector
DCN2-1

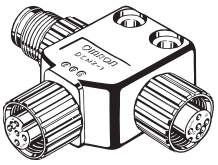

Connections Diagram

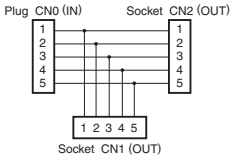

Wiring

Terminal No.	Name
1	SHIELD
2	V+
3	V-
4	CAN H
5	CAN L

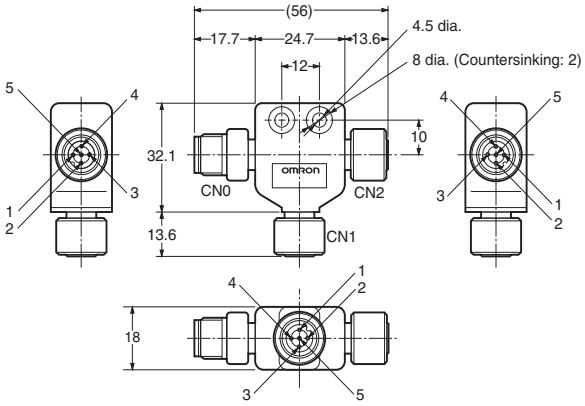

Connectors with Terminating Resistance
DRS2-1 (Plug)
DRS2-2 (Socket)

Wiring

Terminal No.	Name	
1	DRAIN : NC	
2	V+ : NC	
3	V- : NC	
4	CAN H :	121 Ω
5	CAN L :	

Note: Terminating resistance (121 Ω) is connected between terminals 4 and 5.

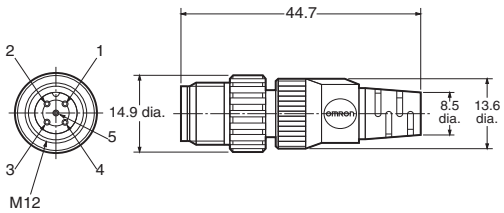

Note: The diagram shows the DRS2-1 (plug).

Panel-mounting Connector (Socket) with 0.5 m Cable
DCA1-5CNC5P1

Wiring

Terminal No.	Color	Name
1	-	DRAIN
2	Red	V+
3	Black	V-
4	White	CAN H
5	Blue	CAN L

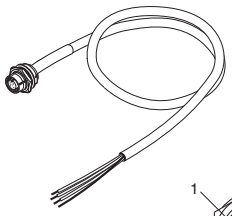

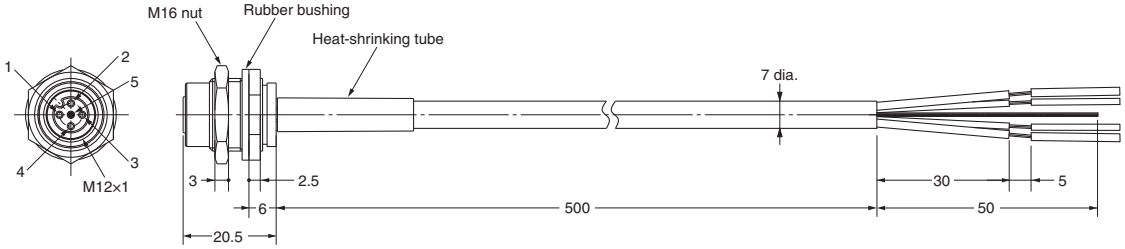

Panel-mounting Connector (Socket), Solder-cup Terminals
XS2P-D522-2

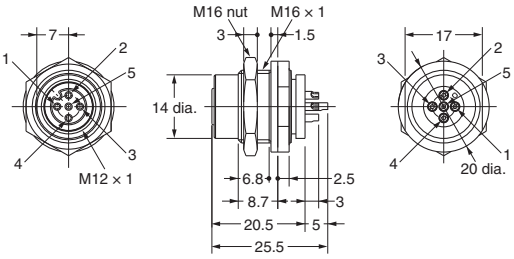

Panel Cutout Dimensions

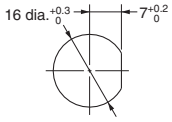

Panel-mounting Connector (Plug) with 0.5 m Cable
DCA1-5CNC5M1

Wiring

Terminal No.	Color	Name
1	-	DRAIN
2	Red	V+
3	Black	V-
4	White	CAN H
5	Blue	CAN L

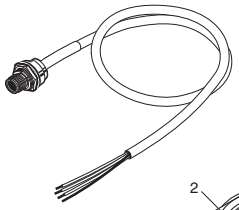

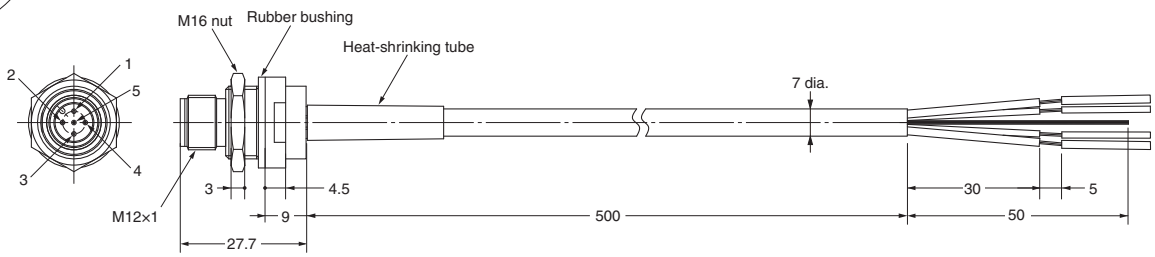

Panel-mounting Connector (Socket), Solder-cup Terminals
XS2M-D524-4

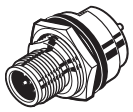

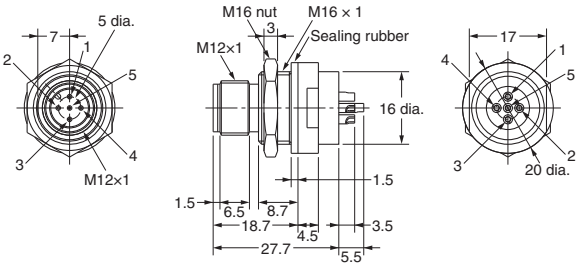

Panel Cutout Dimensions

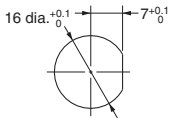

● Environment-resistive Models (for Thin Wires and M12 Micro Connectors)

Cables with Connectors on Both Ends
DCA1-5CS□□W1

Wiring

Terminal No.	Color	Name
1	-	DRAIN
2	Red	V+
3	Black	V-
4	White	CAN H
5	Blue	CAN L

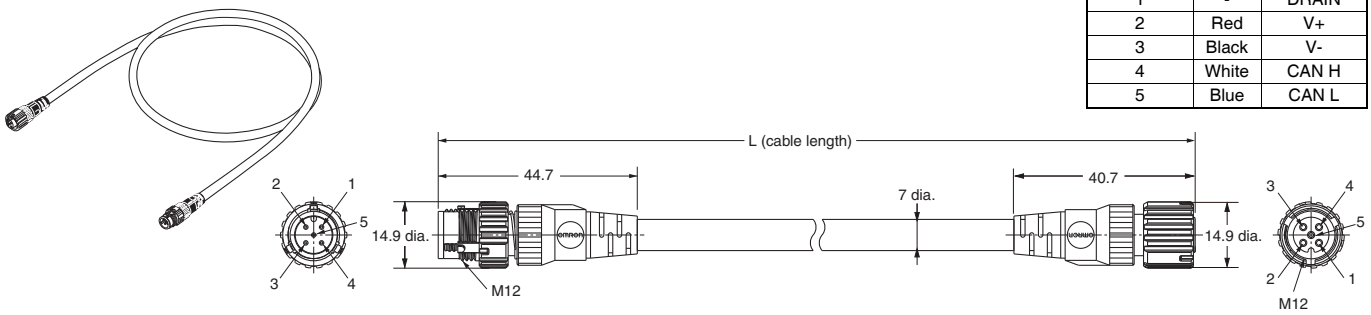

Cables with Connector on Single End (Socket)
DCA1-5CS□□F1

Wiring

Terminal No.	Color	Name
1	-	DRAIN
2	Red	V+
3	Black	V-
4	White	CAN H
5	Blue	CAN L

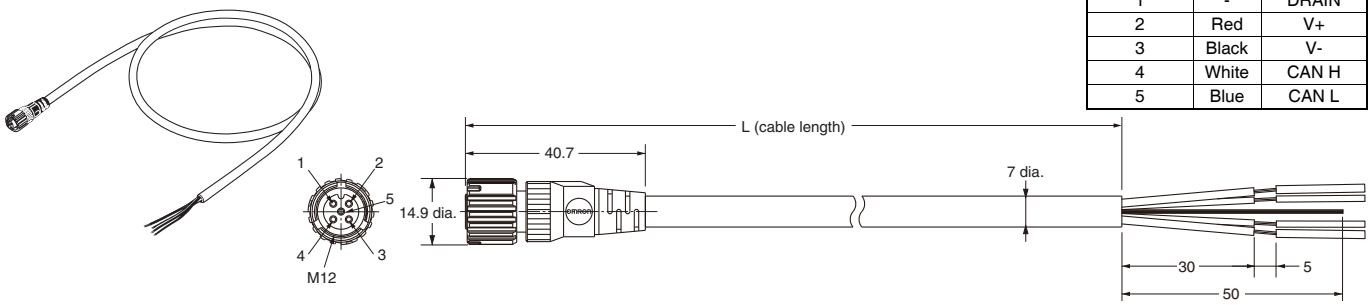

Cables with Connector on Single End (Plug)
DCA1-5CS□□H1

Wiring

Terminal No.	Color	Name
1	-	DRAIN
2	Red	V+
3	Black	V-
4	White	CAN H
5	Blue	CAN L

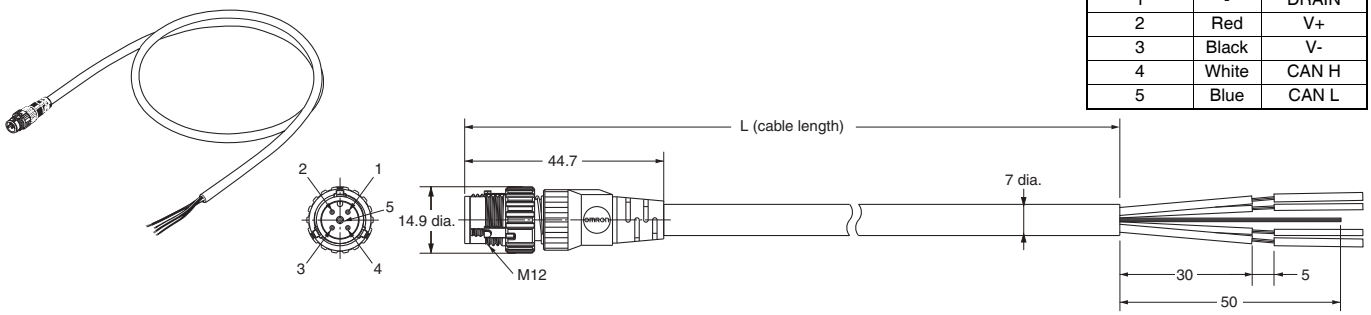

T-branch Connector
DCN2-1S

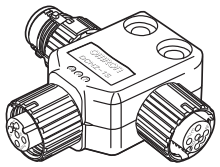

Connections Diagram

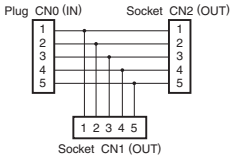

Wiring

Terminal No.	Name
1	SHIELD
2	V+
3	V-
4	CAN H
5	CAN L

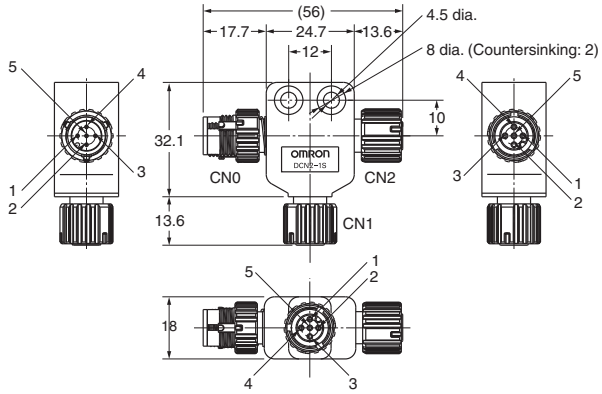

Connectors with Terminating Resistance
DRS2-1S (Plug)
DRS2-2S (Socket)

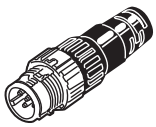

Wiring

Terminal No.	Name
1	DRAIN : NC
2	V+ : NC
3	V- : NC
4	CAN H : 121 Ω
5	CAN L : 121 Ω

Note: Terminating resistance (121 Ω) is connected between terminals 4 and 5.

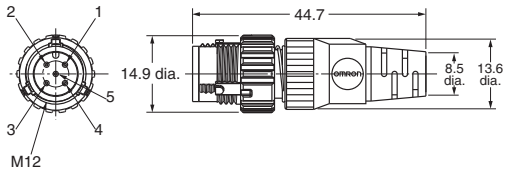

Note: The diagram shows the DRS2-1 (plug).

Shielded Branch Relay Box with Four Ports
DCN2-S4C5H1

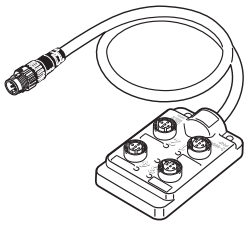

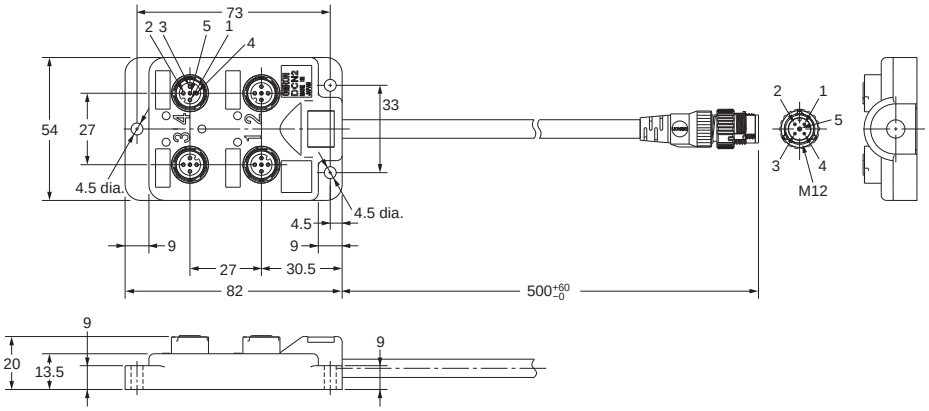

Connections Diagram

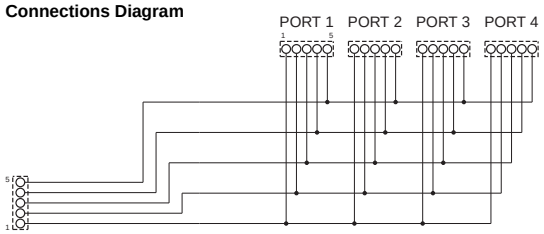

Wiring

Terminal No.	Color	Name
1	-	DRAIN
2	Red	V+
3	Black	V-
4	White	CAN H
5	Blue	CAN L

Shielded Branch Relay Box with Eight Ports
DCN2-S8C5H1

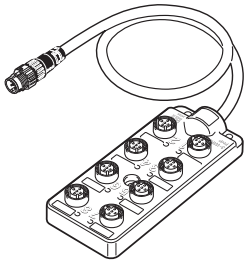

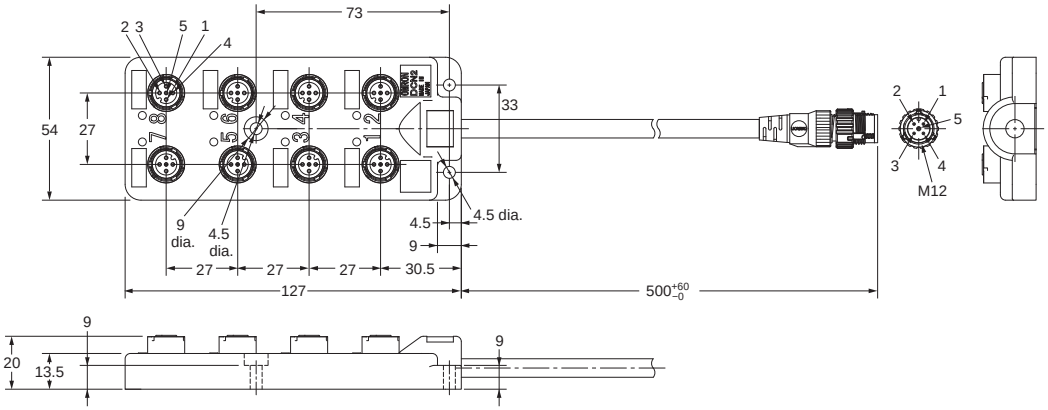

Connections Diagram

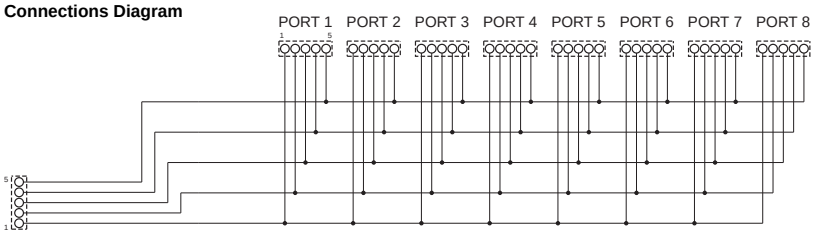

Wiring

Terminal No.	Color	Name
1	-	DRAIN
2	Red	V+
3	Black	V-
4	White	CAN H
5	Blue	CAN L

● Environment-resistive Models for Thick Wires with 7/8-16UN Mini Connectors

Thick Cable with Connectors on Both Ends (5 Conductors for Communications)
DCA2-5CN□□W1

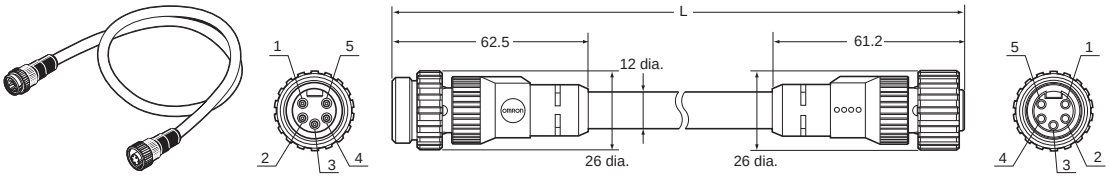

Wiring

Terminal No.	Color	Name
1	-	DRAIN
2	Red	V+
3	Black	V-
4	White	CAN H
5	Blue	CAN L

Thick Cable with Connector Socket on One End (5 Conductors for Communications)
DCA2-5CN□□F1

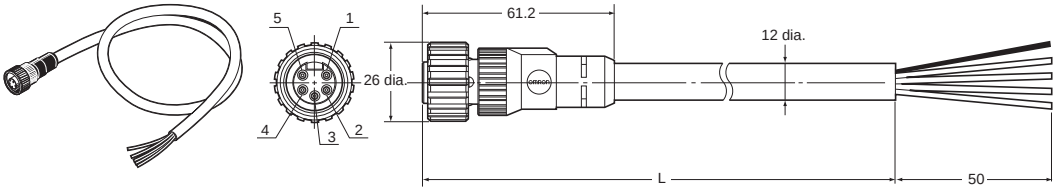

Wiring

Terminal No.	Color	Name
1	-	DRAIN
2	Red	V+
3	Black	V-
4	White	CAN H
5	Blue	CAN L

Thick Cable with Connector Plug on One End (5 Conductors for Communications)
DCA2-5CN□□H1

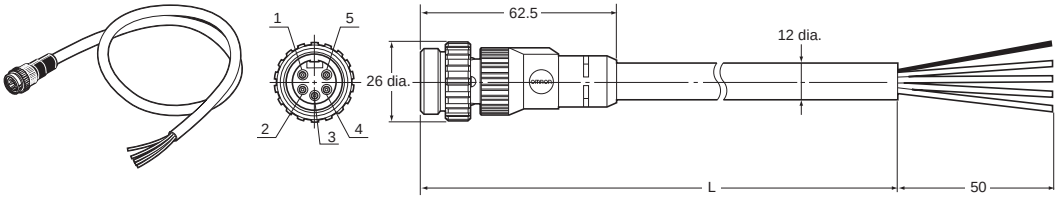

Wiring

Terminal No.	Color	Name
1	-	DRAIN
2	Red	V+
3	Black	V-
4	White	CAN H
5	Blue	CAN L

Thin Cable with Connectors on Both Ends (5 Conductors for Communications)
DCA1-5CN□□W5

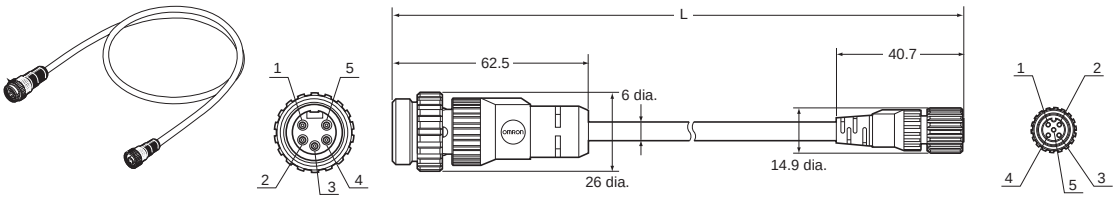

Wiring

Terminal No.	Color	Name
1	-	DRAIN
2	Red	V+
3	Black	V-
4	White	CAN H
5	Blue	CAN L

Thin Cable with Panel-mounting Connector Socket on One End (5 Conductors for Communications)
DCA2-5CNC5P1

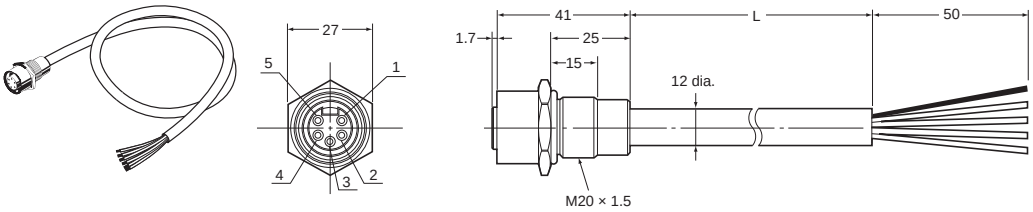

Note: A rubber seal and nut for panel mounting are included.

Panel Cutout Dimensions

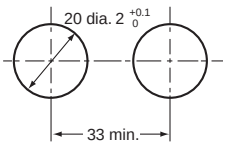

Wiring

Terminal No.	Color	Name
1	-	DRAIN
2	Red	V+
3	Black	V-
4	White	CAN H
5	Blue	CAN L

Panel-mounting Connector (Plug) with 0.5 m Cable
DCA2-5CNC5M1

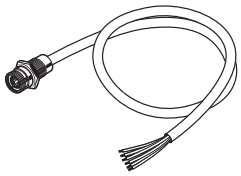

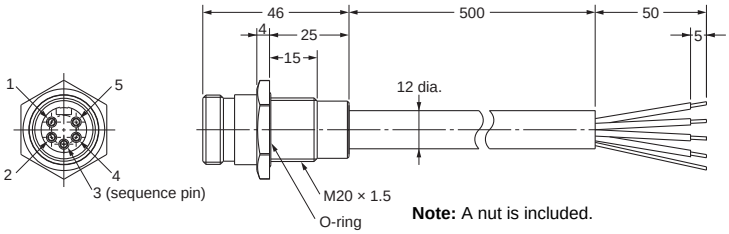

Note: A nut is included.

Wiring

Terminal No.	Color	Name
1	-	DRAIN
2	Red	V+
3	Black	V-
4	White	CAN H
5	Blue	CAN L

T-branch Connector (5 Conductors for Communications, Thick Wire Branch Line)
DCN3-11

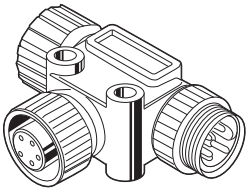

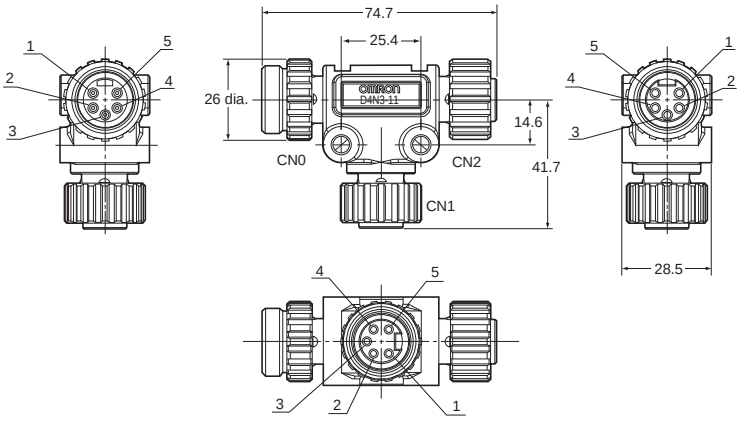

Connections Diagram

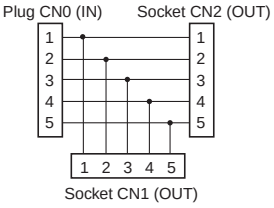

Wiring

Terminal No.	Name
1	DRAIN
2	V+
3	V-
4	CAN H
5	CAN L

T-branch Connector (5 Conductors for Communications, Thin Wire Branch Line)
DCN3-12

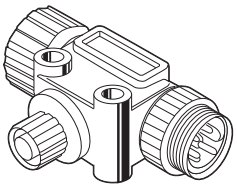

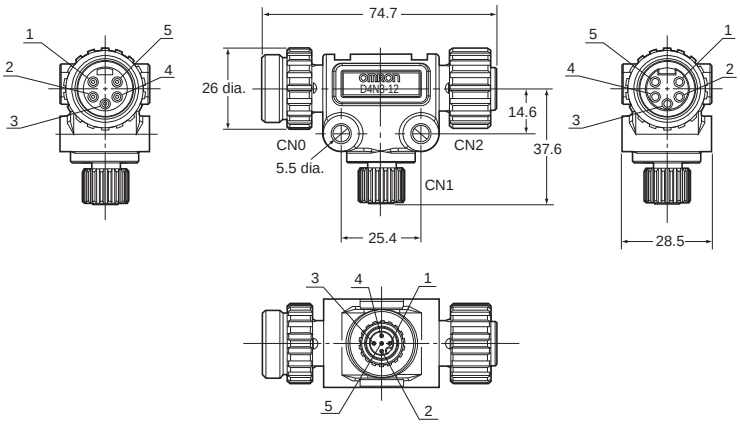

Connections Diagram

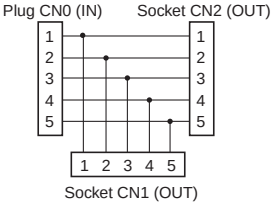

Wiring

Terminal No.	Name
1	DRAIN
2	V+
3	V-
4	CAN H
5	CAN L

Connector (Plug) with Terminating Resistance
DRS3-1

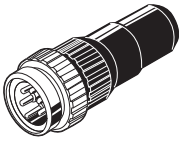

Wiring

Terminal No.	Name
1	DRAIN : NC
2	V+ : NC
3	V- : NC
4	CAN H : 121 Ω
5	CAN L : 121 Ω

Note: Terminating resistance (121 Ω) is connected between terminals 4 and 5.

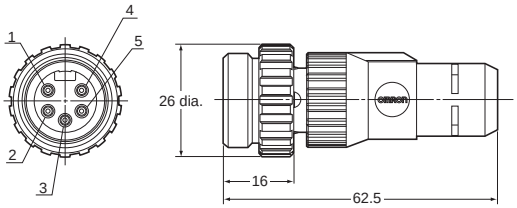

Panel-mounting Connector (5 Pins for Communications)
XS4M-D521-1

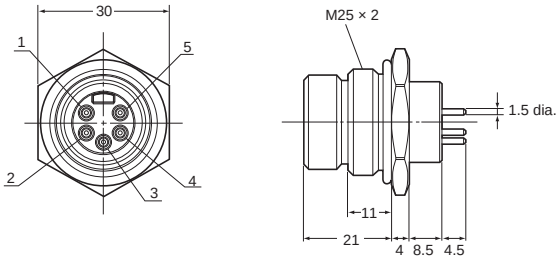

Panel Cutout Dimensions **PCB Processing Dimensions**

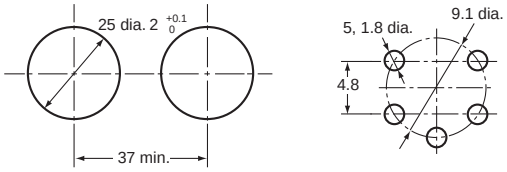

Note: A rubber seal and nut for panel mounting are included.

I/O Peripheral Devices

Applicable Connectors

● Assembly Connector Plugs for M12 Microconnectors

Appearance	Applicable cable diameter (mm)	Cable direction	Number of poles	Connection method		
				Crimping	Soldering	Screws
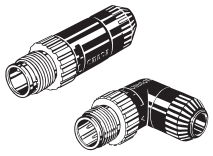	For 6 dia. (5 to 6 dia.)	Straight	4	XS2G-D4C1	XS2G-D421	XS2G-D4S1
		L-shaped		--	XS2G-D422	XS2G-D4S2
	For 4 dia. (4 to 5 dia.)	Straight		XS2G-D4C3	XS2G-D423	XS2G-D4S3
		L-shaped		--	XS2G-D424	XS2G-D4S4
	For 3 dia. (3 to 4 dia.)	Straight		XS2G-D4C5	XS2G-D425	XS2G-D4S5
		L-shaped		--	XS2G-D426	XS2G-D4S6
	For 7 dia. (6 to 7 dia.)	Straight		--	--	XS2G-D4S9
	For 8 dia. (7 to 8 dia.)					XS2G-D4S7

● Smart click Assembly Connector Plugs for M12 Microconnectors

Appearance	Applicable cable diameter (mm)	Cable direction	Number of poles	Connection method		
				Crimping	Soldering	Screws
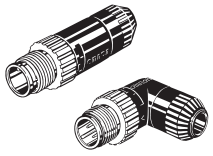	For 6 dia. (5 to 6 dia.)	Straight	4	XS5G-D4C1	XS5G-D421	XS5G-D4S1
		L-shaped		--	XS5G-D422	XS5G-D4S2
	For 4 dia. (4 to 5 dia.)	Straight		XS5G-D4C3	XS5G-D423	XS5G-D4S3
		L-shaped		--	XS5G-D424	XS5G-D4S4
	For 3 dia. (3 to 4 dia.)	Straight		XS5G-D4C5	XS5G-D425	XS5G-D4S5
		L-shaped		--	XS5G-D426	XS5G-D4S6
	For 7 dia. (6 to 7 dia.)	Straight		--	--	XS5G-D4S9
	For 8 dia. (7 to 8 dia.)					XS5G-D4S7

Applicable Cables with Connectors

● Cables with Connector (Socket/Plug) on Both Ends (M12 Microconnectors for Power Supply and I/O)

Appearance	Cable direction	Number of core wires	Cable length (m)	Screw-type Connectors	Smart click Connectors
	Straight/Straight	4	1	XS2W-D421-C81-F	XS5W-D421-C81-F
			2	XS2W-D421-D81-F	XS5W-D421-D81-F
			5	XS2W-D421-G81-F	XS5W-D421-G81-F
	L-shaped/L-shaped		2	XS2W-D422-D81-F	XS5W-D422-D81-F
			5	XS2W-D422-G81-F	XS5W-D422-G81-F
	Straight/L-shaped		2	XS2W-D423-D81-F	XS5W-D423-D81-F
			5	XS2W-D423-G81-F	XS5W-D423-G81-F
	L-shaped/Straight		2	XS2W-D424-D81-F	XS5W-D424-D81-F
			5	XS2W-D424-G81-F	XS5W-D424-G81-F

● Cables with connector plug on One End (M12 Microconnectors for I/O)

Appearance	Cable direction	Number of core wires	Cable length (m)	Screw-type Connectors	Smart click Connectors
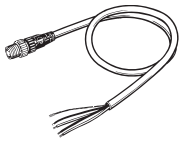	Straight	3	0.3	XS2H-D421-AC0-F	XS5H-D421-AC0-F
		4		XS2H-D421-A80-F	XS5H-D421-A80-F
		3	1	XS2H-D421-CC0-F	XS5H-D421-CC0-F
		4		XS2H-D421-C80-F	XS5H-D421-C80-F

● Plugs and Sockets on Y-shaped Joints (M12 Microconnectors for I/O)

Appearance	Cable	Connector	DC models		
			Cable length (m)	Screw-type Connectors	Smart click Connectors
	With cable	Connectors on both ends	0.5	**XS2R-D426-B11-F**	**XS5R-D426-B11-F**
			1	**XS2R-D426-C11-F**	**XS5R-D426-C11-F**
			2	**XS2R-D426-D11-F**	**XS5R-D426-D11-F**
			3	**XS2R-D426-E11-F**	**XS5R-D426-E11-F**
		Connector on one end	2	**XS2R-D426-D10-F**	**XS5R-D426-D10-F**
			5	**XS2R-D426-G10-F**	**XS5R-D426-G10-F**
	Without cable	Connectors on both ends	--	**XS2R-D426-1**	**XS5R-D426-1**

Note 1: Use is supported only for Environment-resistive Terminals (DRT2-□D16C(L)(-1)).
Note 2: Connecting two XS2G assembly connectors (screw-type) side by side to the Y-branch connectors (CN1 and CN2) of a Y-shaped joint is not possible. Use crimped terminals or soldered terminals.

● Connector Cover for M12 Microconnectors

Appearance	Product	Model	Application
	Waterproof cover (socket)	**XS2Z-22**	For covering unused I/O connectors

Power Supply Peripheral Devices

Applicable Cables with Connectors

● Power Supply Connectors (7/8-16UN Miniconnectors)

Appearance	Product	Cable length L (mm)	Model
	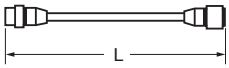	1	**XS4W-D421-101-A**
		2	**XS4W-D421-102-A**
		5	**XS4W-D421-105-A**
		10	**XS4W-D421-110-A**
	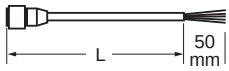	1	**XS4F-D421-101-A**
		2	**XS4F-D421-102-A**
		5	**XS4F-D421-105-A**
		10	**XS4F-D421-110-A**
	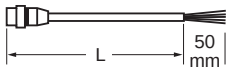	1	**XS4H-D421-101-A**
		2	**XS4H-D421-102-A**
		5	**XS4H-D421-105-A**
		10	**XS4H-D421-110-A**
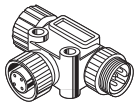	T-branch Connector	--	**XS4R-D424-5**
	Panel mounting connector socket Cable: 50 cm	--	**XS4P-D421-1C5-A**
	Panel mounting connector plug DIP terminals	--	**XS4M-D421-1**
-	Waterproofing Cap for Plug	--	**XS4Z-11**
-	Waterproofing Cap for Socket	--	**XS4Z-12**

MEMO

Ordering Information

Masters 160
Slaves 161
- Smart Slaves DRT2 Series 161
- SmartSlice GRT1-series 163
- MULTIPLE I/O TERMINALS 164
- Intelligent Slaves (PLC Units) 164
- Intelligent Slaves 165

CIP Safety on DeviceNet System 167
Configurator 167
Software 168
Peripheral Devices 169
- Models for Standard Cables 169
- Models for Flat Cables 170
- Environment-resistive Models for Thin Wires with M12 Microconnectors 171
- Environment-resistive Models for Thick Wires with 7/8-16UN Miniconnectors 172
- Environment-resistive Models for Thin Wires with M12 Smart Click Microconnectors 173
- Cables with Connectors Compatible with MULTIPLE I/O TERMINAL Connectors 173

Ordering Information

● International Standards

- The standards indicated in the "Standard" column are those current for UL, CSA, cULus, cUL, NK, and Lloyd standards and EC Directives as of the end of March 2009. (U: The standards are abbreviated as follows: U: UL, U1: UL Class I Division 2 Products for Hazardous Locations, C: CSA, UC: cULus, UC1: cULus Class I division 2 Products for Hazardous Locations, CU: cUL, N: NK, L: Lloyd, and CE: EC Directives.
- Ask your OMRON representative for the conditions under which the standards were met.

● EC Directives

The EC Directives applicable to PLCs include the EMC Directives and the Low Voltage Directive. OMRON complies with these directives as described below

● EMC Directives

Applicable Standards EMI: EN61000-6-4
EMS: EN61131-2 and EN61000-6-2 (See note.)

manufacturing installations. OMRON PLCs conform to the related EMC standards so that the devices and machines into which they are built can more easily conform to EMC standards. The actual PLCs have been checked for conformity to EMC standards. Whether these standards are satisfied for the actual system, however, must be checked by the customer.

EMC-related performance will vary depending on the configuration, wiring, and other conditions of the equipment or control panel in which the PLC is installed. The customer must, therefore, perform final checks to confirm that the overall machine or device conforms to EMC standards.

Note: The applicable EMS standard depends on the product

● Low Voltage Directive

Applicable Standard: EN61131-2

Devices that operate at voltages from 50 to 1,000 VAC or 75 to 150 VDC must satisfy the appropriate safety requirements. With PLCs, this applies to Power Supply Units and I/O Units that operate in these voltage ranges. These Units have been designed to conform to EN61131-2, which is the applicable standard for PLCs.

List of Models

Masters

Product	Appearance	Specifications	Model	Standards
DeviceNet Unit		Model for CJ Series. Equipped with Master and Slave functionality. Control for up to 32,000 points per Master.	**CJ1W-DRM21**	UC1, N, L, CE
		Model for CS Series. Equipped with Master and Slave functionality. Control for up to 32,000 points per Master.	**CS1W-DRM21-V1**	

Note: Refer to the CJ1 Catalog (Cat. No. P052) for details on the CJ1.
Refer to the CS1 Catalog (Cat. No. P047) for details on the CS1.

Product	Appearance	Controller specifications	Display specifications		Ethernet port	Model ✻	Standards
			Display device	Resolution			
NSJ-series Programmable Controller		I/O capacity: 1280 points Program capacity: 60K steps Data memory capacity: 128K words (DM: 32K words, EM: 32K words x 3 banks)	5.7-inch color High-luminance TFT LCD	320 x 240 (QVGA)	10/100Base-T	**NSJ5-TQ11(B)-G5D**	UC1, CE, UL Type4
			8.4-inch color TFT LCD	640 x 480 (VGA)	10/100Base-T	**NSJ8-TV01(B)-G5D**	UC1, CE
			10.4-inch color TFT LCD		10/100Base-T	**NSJ10-TV01(B)-G5D**	UC1, CE, UL Type4
			12.1-inch color TFT LCD	800 x 600 (SVGA)	10/100Base-T	**NSJ12-TS01(B)-G5D**	

✻ (B) in the model number indicates that the color of the Controller frame is black.

Product	Appearance	Specifications	Model	Standards
DeviceNet Board		PCI Board I/O allocation space: 25,200 bytes Equipped with Master and Slave functionality	**3G8F7-DRM21** **3G8F7-DRM21-E1**	U, C, CE

Note: For information on the CJ1, refer to the *CJ1 PLC Catalog* (Cat. No. P052) and *CJ2 PLC Catalog* (Cat. No. P059).
Refer to the CS1 Catalog (Cat. No. P047) for details on the CS1.
Refer to the C200HX/HG/HE Catalog (Cat. No. P036) for details on the C200HX/HG/HE.

Slaves

● Smart Slaves DRT2 Series

Product	Appearance	Specifications	Model	Standards
Remote I/O Terminals with Transistors	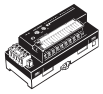	16 inputs NPN (+ common)	**DRT2-ID16**	UC1, N, CE
		16 inputs PNP (- common)	**DRT2-ID16-1**	
		16 outputs NPN (- common)	**DRT2-OD16**	
		16 outputs PNP (+ common)	**DRT2-OD16-1**	
		8 inputs NPN (+ common)	**DRT2-ID08**	UC1, CE
		8 inputs PNP (- common)	**DRT2-ID08-1**	
		8 outputs NPN (- common)	**DRT2-OD08**	
		8 outputs PNP (+ common)	**DRT2-OD08-1**	
		8 inputs/8 outputs NPN (+ common for inputs and - common for outputs)	**DRT2-MD16**	
		8 inputs/8 outputs PNP (- common for inputs and + common for outputs)	**DRT2-MD16-1**	
Remote I/O Terminal Expansion Units with Transistors	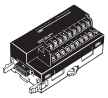	8 inputs NPN (+ common)	**XWT-ID08**	UC, UC1, N, CE
		8 inputs PNP (- common)	**XWT-ID08-1**	
		8 outputs NPN (- common)	**XWT-OD08**	
		8 outputs PNP (+ common)	**XWT-OD08-1**	
		16 inputs NPN (+ common)	**XWT-ID16**	
		16 inputs PNP (- common)	**XWT-ID16-1**	
		16 outputs NPN (- common)	**XWT-OD16**	
		16 outputs PNP (+ common)	**XWT-OD16-1**	
Remote I/O Terminal with Relays	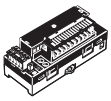	16 outputs	**DRT2-ROS16**	UC1, N, CE
Remote I/O Terminals with 3-tier Terminal Blocks and Transistors	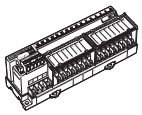	16 inputs NPN (+ common)	**DRT2-ID16TA**	UC1, CE
		16 inputs PNP (- common)	**DRT2-ID16TA-1**	
		16 outputs NPN (- common)	**DRT2-OD16TA**	
		16 outputs PNP (+ common)	**DRT2-OD16TA-1**	
		8 inputs/8 outputs NPN (+ common for inputs and - common for outputs)	**DRT2-MD16TA**	
		8 inputs/8 outputs PNP (- common for inputs and + common for outputs)	**DRT2-MD16TA-1**	
e-CON Connector Terminals		16 inputs NPN (+ common)	**DRT2-ID16S**	UC1, CE
		16 inputs PNP (- common)	**DRT2-ID16S-1**	
		8 inputs/8 outputs NPN (+ common for inputs and - common for outputs)	**DRT2-MD16S**	CE
		8 inputs/8 outputs PNP (- common for inputs and + common for outputs)	**DRT2-MD16S-1**	
MIL Connector Terminals (MIL Connector Terminals with Transistors)	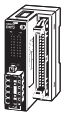	32 inputs NPN (+ common)	**DRT2-ID32ML**	UC1, N, CE
		32 inputs PNP (- common)	**DRT2-ID32ML-1**	
		32 outputs NPN (- common)	**DRT2-OD32ML**	
		32 outputs PNP (+ common)	**DRT2-OD32ML-1**	
		16 inputs/16 outputs NPN (+ common for inputs and - common for outputs)	**DRT2-MD32ML**	
		16 inputs/16 outputs PNP (- common for inputs and + common for outputs)	**DRT2-MD32ML-1**	
		16 inputs NPN (+ common)	**DRT2-ID16ML**	UC1, CE
		16 inputs PNP (- common)	**DRT2-ID16ML-1**	
		16 outputs NPN (- common)	**DRT2-OD16ML**	
		16 outputs PNP (+ common)	**DRT2-OD16ML-1**	
		16 inputs NPN (+ common)	**DRT2-ID16MLX**	
		16 inputs PNP (- common)	**DRT2-ID16MLX-1**	
		16 outputs NPN (- common)	**DRT2-OD16MLX**	
		16 outputs PNP (+ common)	**DRT2-OD16MLX-1**	
Board Terminals with MIL Connectors (Parallel Mounting)	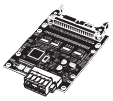	32 inputs NPN (+ common)	**DRT2-ID32B**	UC1, CE
		32 inputs PNP (- common)	**DRT2-ID32B-1**	
		32 outputs NPN (- common)	**DRT2-OD32B**	
		32 outputs PNP (+ common)	**DRT2-OD32B-1**	
		16 inputs/16 outputs NPN (+ common for inputs and - common for outputs)	**DRT2-MD32B**	
		16 inputs/16 outputs PNP (- common for inputs and + common for outputs)	**DRT2-MD32B-1**	
Board Terminals with MIL Connector (Perpendicular Mounting)		32 inputs NPN (+ common)	**DRT2-ID32BV**	UC1, CE
		32 inputs PNP (- common)	**DRT2-ID32BV-1**	
		32 outputs NPN (- common)	**DRT2-OD32BV**	
		32 outputs PNP (+ common)	**DRT2-OD32BV-1**	
		16 inputs/16 outputs NPN (+ common for inputs and - common for outputs)	**DRT2-MD32BV**	
		16 inputs/16 outputs PNP (- common for inputs and + common for outputs)	**DRT2-MD32BV-1**	

Product	Appearance	Specifications		Model	Standards
Screw-less Clamp Terminals with Transistors	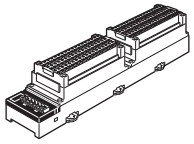	16 inputs NPN (+ common)	Detection functions	**DRT2-ID16SLH**	U, UC1, CE
		16 inputs PNP (- common)	Detection functions	**DRT2-ID16SLH-1**	
		16 outputs NPN (- common)	Detection functions	**DRT2-OD16SLH**	
		16 outputs PNP (+ common)	Detection functions	**DRT2-OD16SLH-1**	
		16 inputs NPN (+ common)	No Detection functions	**DRT2-ID16SL**	
		16 inputs PNP (- common)	No Detection functions	**DRT2-ID16SL-1**	
		16 outputs NPN (- common)	No Detection functions	**DRT2-OD16SL**	
		16 outputs PNP (+ common)	No Detection functions	**DRT2-OD16SL-1**	
		32 inputs NPN (+ common)	Detection functions	**DRT2-ID32SLH**	UC1, CE
		32 inputs PNP (- common)	Detection functions	**DRT2-ID32SLH-1**	
		32 outputs NPN (- common)	Detection functions	**DRT2-OD32SLH**	
		32 outputs PNP (+ common)	Detection functions	**DRT2-OD32SLH-1**	
		16 inputs/16 outputs NPN (+ common for inputs and - common for outputs) Detection functions		**DRT2-MD32SLH**	
		16 inputs/16 outputs PNP (- common for inputs and + common for outputs) Detection functions		**DRT2-MD32SLH-1**	
Advanced Environment-resistive Terminals with Transistors	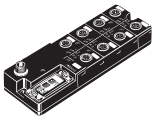	8 inputs NPN (+ common)		**DRT2-ID08C**	UC, N, CE
		8 inputs PNP (- common)		**DRT2-ID08C-1**	UC1, N, CE
		8 outputs NPN (- common)		**DRT2-OD08C**	UC, N, CE
		8 outputs PNP (+ common)		**DRT2-OD08C-1**	UC1, N, CE
		16 inputs NPN (+ common)		**DRT2-HD16C**	UC, N, CE
		16 inputs PNP (- common)		**DRT2-HD16C-1**	
Standard Environment-resistive Terminals with Transistors		4 inputs NPN (+ common)		**DRT2-ID04CL**	UC1, CE
		4 inputs PNP (- common)		**DRT2-ID04CL-1**	
		4 outputs NPN (- common)		**DRT2-OD04CL**	
		4 outputs PNP (+ common)		**DRT2-OD04CL-1**	
		8 inputs NPN (+ common)		**DRT2-ID08CL**	
		8 inputs PNP (- common)		**DRT2-ID08CL-1**	
		8 outputs NPN (- common)		**DRT2-OD08CL**	
		8 outputs PNP (+ common)		**DRT2-OD08CL-1**	
		16 inputs NPN (+ common)		**DRT2-HD16CL**	
		16 inputs PNP (- common)		**DRT2-HD16CL-1**	
		16 outputs NPN (- common)		**DRT2-WD16CL**	
		16 outputs PNP (+ common)		**DRT2-WD16CL-1**	
		8 inputs/8 outputs NPN (+ common for inputs and - common for outputs)		**DRT2-MD16CL**	
		8 inputs/8 outputs PNP (- common for inputs and + common for outputs)		**DRT2-MD16CL-1**	
Analog Input Terminals	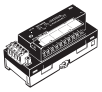	4 inputs (resolution: 6,000)		**DRT2-AD04**	UC1, CE
		4 inputs (resolution: 30,000)		**DRT2-AD04H**	
Analog Output Terminal		2 outputs		**DRT2-DA02**	
Temperature Input Terminals with Thermocouple Inputs	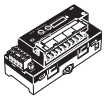	4 inputs		**DRT2-TS04T**	UC1, CE
Temperature Input Terminals with Platinum-resistance Thermometer Inputs		4 inputs		**DRT2-TS04P**	

● SmartSlice GRT1 Series

Product		Appearance	Specifications	Model	Standards
DeviceNet Communications Unit			Up to 64 SmartSlice I/O Units can be connected (1,024 I/O points).	**GRT1-DRT**	UC1, CE, L
SmartSlice I/O Units	Digital I/O Units		4 inputs, NPN	**GRT1-ID4**	UC1, CE, L
			4 inputs, PNP	**GRT1-ID4-1**	
			4 outputs, NPN	**GRT1-OD4**	
			4 outputs, PNP	**GRT1-OD4-1**	
			8 inputs, NPN	**GRT1-ID8**	UC, CE, L
			8 inputs, PNP	**GRT1-ID8-1**	
			8 outputs, NPN	**GRT1-OD8**	
			8 outputs, PNP	**GRT1-OD8-1**	
			2 relay outputs	**GRT1-ROS2**	UC1, CE, L
			4 AC inputs	**GRT1-IA4-1**	UC1, CE, L
				GRT1-IA4-2	
	Analog I/O Units		2 inputs (current/voltage)	**GRT1-AD2**	UC1, CE, L
			2 outputs (current)	**GRT1-DA2C**	
			2 outputs (voltage)	**GRT1-DA2V**	
	Temperature input (resistance thermometer)		2 temperature inputs (PT100 resistance thermometer)	**GRT1-TS2P**	UC1, CE, L
			2 temperature inputs (PT1000 resistance thermometer)	**GRT1-TS2PK**	
			2 thermocouple inputs	**GRT1-TS2T**	UC, CE, L
	Counter Units		1 counter input, 1 external output, NPN	**GRT1-CT1**	UC, CE, L
			1 counter input, 1 external output, PNP	**GRT1-CT1-1**	
System Units	Turnback Units		Right Turnback (Used to divide a SmartSlice I/O Terminal into blocks.)	**GRT1-TBR**	UC1, CE, L
			Left Turnback (Used to divide a SmartSlice I/O Terminal into blocks.)	**GRT1-TBL**	
	Turnback Cable	--	Length: 1 m	**GCN2-100**	UC1 ✻2, CE, L
	I/O Power Supply Units		Used if the total current consumption of the I/O power supply exceeds 4 A or to provide an I/O power supply on a separate system.	**GRT1-PD2**	UC1, CE, L
				GRT1-PD2G	UC, CE, L
				GRT1-PD8	
				GRT1-PD8-1	
			Used to add the V and G terminals for the I/O power supply.	**GRT1-PC8**	
				GRT1-PC8-1	
	End Unit ✻1		Required at the end of SmartSlice I/O Terminals.	**GRT1-END**	UC1, CE, L
Options	Terminal Block	--	Terminal block (5 blocks)	**GRT1-BT1-5**	--

✻1. The End Unit is sold separately. (End Units are not included with Communications Units.)
✻2. Use the GCN2-100 as a set with the GRT1-TBR and GRT1-TBL.

● MULTIPLE I/O TERMINALS

Product		Appearance	I/O points	Specifications	Model	Standards
Communications Unit			--	Slave I/O points 1,024 max. (inputs and outputs)	**DRT1-COM**	U, C, CE
Digital I/O Units	Terminal block models		16 inputs	NPN (+ common)	**GT1-ID16**	U, C, CE
			16 inputs	PNP (- common)	**GT1-ID16-1**	
			16 outputs	NPN (- common)	**GT1-OD16**	
			16 outputs	PNP (+ common)	**GT1-OD16-1**	
	Molex connector models		16 inputs	NPN (+ common)	**GT1-ID16MX**	
			16 inputs	PNP (- common)	**GT1-ID16MX-1**	
			16 outputs	NPN (- common)	**GT1-OD16MX**	
			16 outputs	PNP (+ common)	**GT1-OD16MX-1**	
	Fujitsu connector models	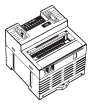	16 inputs	NPN (+ common)	**GT1-ID16ML**	
			16 inputs	PNP (- common)	**GT1-ID16ML-1**	
			16 outputs	NPN (- common)	**GT1-OD16ML**	
			16 outputs	PNP (+ common)	**GT1-OD16ML-1**	
	D-sub, 25-pin connector models	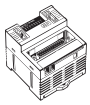	16 inputs	NPN (+ common)	**GT1-ID16DS**	
			16 inputs	PNP (- common)	**GT1-ID16DS-1**	
			16 outputs	NPN (- common)	**GT1-OD16DS**	
			16 outputs	PNP (+ common)	**GT1-OD16DS-1**	
	Fujitsu high-density connector models		32 inputs	NPN (+ common)	**GT1-ID32ML**	
			32 inputs	PNP (- common)	**GT1-ID32ML-1**	
			32 outputs	NPN (- common)	**GT1-OD32ML**	
			32 outputs	PNP (+ common)	**GT1-OD32ML-1**	
Relay Output Unit			16 outputs	Relay Output Unit with 16 points, 2 A, SPST-NO terminal block	**GT1-ROS16**	U, C, CE
			8 outputs	Relay Output Unit with 8 points, 5 A, SPST-NO terminal block	**GT1-ROP08**	
			8 outputs	SSR Output Unit with 8 points, 1.5 A, SPSTNO terminal block	**GT1-FOP08**	--
Analog Input Units		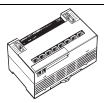	8 inputs	Molex connector	**GT1-AD08MX**	U, C, CE
			4 inputs	Terminal block	**GT1-AD04**	
Analog Output Units			4 outputs	Molex connector	**GT1-DA04MX**	U, C, CE
			4 outputs	Terminal block	**GT1-DA04**	
Temperature Input Units			4 inputs	Thermocouple input	**GT1-TS04T**	U, C, CE
			4 inputs	Platinum-resistance thermometer input	**GT1-TS04P**	
I/O Unit Connecting Cable			--	1 m	**GCN1-100**	--
				30 cm	**GCN1-030**	
				60 cm	**GCN1-060**	

● Intelligent Slaves (PLC Units)

Product	Appearance	Specifications		Model	Standards
Programmable Slaves		Slave equipped with CPM2C CPU Unit functions 1,024 points max. for Remote I/O Links Includes CompoBus/s Master.	4 transistor outputs (sinking)	**CPM2C-S100C-DRT**	U, C, CE
			4 transistor	**CPM2C-S110C-DRT**	

● Intelligent Slaves

Product	Appearance	Specifications			Model	Standards
Digital Sensor Communications Unit		Up to 16 E3X-DA-S, E3X-MDA, E3X-LDA, and E2C-EDA Fiber Amplifiers can be connected.			**E3X-DRT21-S VER.3**	CE
	--	Fiber Amplifier Unit	Advanced models	NPN	**E3X-DA7-S ✻1**	
				PNP	**E3X-DA9-S ✻1**	
			Standard models	NPN	**E3X-DA6-S ✻1**	
				PNP	**E3X-DA8-S ✻1**	
			Mark-detecting models (Blue LED)	NPN	**E3X-DAB6-S**	
				PNP	**E3X-DAB8-S**	
			Mark-detecting models (Green LED)	NPN	**E3X-DAG6-S**	
				PNP	**E3X-DAG8-S**	
			Mark-detecting models (Infrared LED)	NPN	**E3X-DAH6-S**	
				PNP	**E3X-DAH8-S**	
			Advanced Twin-output models	NPN	**E3X-DA6TW-S ✻1**	
				PNP	**E3X-DA8TW-S ✻1**	
			Advanced External input models	NPN	**E3X-DA6RM-S ✻1**	
				PNP	**E3X-DA8RM-S ✻1**	
			2-channel models	NPN	**E3X-MDA6**	
				PNP	**E3X-MDA8**	
		Laser Photoelectric Sensor with Separate Amplifier	Twin-output models	NPN	**E3C-LDA6**	
				PNP	**E3C-LDA8**	
			External input models	NPN	**E3C-LDA7**	
				PNP	**E3C-LDA9**	
		Proximity Sensor with Separate Amplifier	Twin-output models	NPN	**E2C-EDA6**	
				PNP	**E2C-EDA8**	
			External input models	NPN	**E2C-EDA7**	
				PNP	**E2C-EDA9**	
		Wire-Saving Connector			**E3X-CN02 ✻2**	
Intelligent Flag III	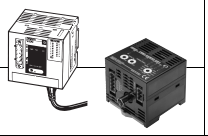	ID system for DeviceNet For the information on the status of certification for radio wave regulations in various countries, visit the OMRON website at **www.ia.omron.com**.			**V600-HAM42-DRT**	CE
DeviceNet ID Slave					**V680-HAM42-DRT**	UC, CE, RCM
DeviceNet-compliant Indicators		DeviceNet-compliant Process Indicator			**K3HB-XVD-A-DRT1**	UC, CE
		DeviceNet-compliant Weighing Indicator			**K3HB-VLC-B-DRT1**	
		DeviceNet-compliant Temperature Indicator			**K3HB-HTA-DRT1**	
		DeviceNet-compliant Linear Sensor Indicators			**K3HB-SSD-A-DRT1**	
		DeviceNet-compliant Rotary Pulse Indicator			**K3HB-RNB-A-DRT1**	
		DeviceNet-compliant Time Interval Indicator			**K3HB-PNB-A-DRT1**	
		DeviceNet-compliant Up/Down Counting Pulse Indicator			**K3HB-CNB-A-DRT1**	
DeviceNet-compliant Digital Controllers		Basic Type (1 input)			**E5AR-Q4B-DRT**	UC, CE
					E5AR-C4B-DRT	
					E5AR-QC4B-DRT	
		2-input Type			**E5AR-QQ4W-DRT**	
		4-input Type			**E5AR-CC4WW-DRT**	
		Control Valve Control Type (1 input)			**E5AR-PR4F-DRT**	
					E5AR-PRQ4F-DRT	
		Basic Type (1 input)			**E5ER-QTB-DRT**	
					E5ER-CTB-DRT	
		2-input Type			**E5ER-QTW-DRT**	
					E5ER-CTW-DRT	
		Control Valve Control Type (1 input)			**E5ER-PRTF-DRT**	

✻1. E3X-DA7-S, E3X-DA9-S, E3X-DA6-S, E3X-DA8-S, E3X-DA6TW-S, E3X-DA8TW-S, E3X-DA6RM-S, E3X-DA8RM-S have been discontinued at the end of March 2017.
✻2. Order as many Connectors as the number of Sensors.

Product		Appearance	Specifications			Model	Standards
Modular Temperature Controller	CPU Bus Unit with DeviceNet Communications	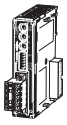	External input power supply voltage: 24 VDC Applicable model: EJ1			**EJ1N-HFUB-DRT**	UC, CE
	Basic Units for Temperature Control	--	24 VDC supplied from the End Unit.	No. of control outputs: 2 Control outputs 1 and 2: 2 voltage outputs (for SSR drive) Control outputs 3 and 4: 2 transistor outputs (sinking)	M3 terminals	**EJ1N-TC2A-QNHB**	
					Screw-less clamp terminals	**EJ1N-TC2B-QNHB**	
				No. of control outputs: 4 Control outputs 1 and 2: 2 voltage outputs (for SSR drive) Control outputs 3 and 4: 2 voltage outputs (for SSR drive)	M3 terminals	**EJ1N-TC4A-QQ**	
					Screw-less clamp terminals	**EJ1N-TC4B-QQ**	
				No. of control outputs: 2 Control outputs 1 and 2: 2 current outputs Control outputs 3 and 4: 2 transistor outputs (sinking)	M3 terminals	**EJ1N-TC2A-CNB**	
					Screw-less clamp terminals	**EJ1N-TC2B-CNB**	
	CPU Bus Units with Programless Connection		24 VDC supplied from the End Unit.	Auxiliary outputs: 4 transistor outputs (sinking)	M3 terminals	**EJ1N-HFUA-NFLK**	
					Screw-less clamp terminals	**EJ1N-HFUB-NFLK**	
				Auxiliary outputs: 4 transistor outputs (sinking)	M3 terminals	**EJ1N-HFUA-NFL2**	
					Screw-less clamp terminals	**EJ1N-HFUB-NFL2**	
	End Units		24 VDC	Auxiliary outputs: 2 transistor outputs (sinking)	M3 terminals	**EJ1C-EDUA-NFLK**	
					Connector terminals	**EJ1C-EDUC-NFLK**	
Multi-function Compact Inverter			MX2-Series V1 type DeviceNet Communication Unit			**3G3AX-MX2-DRT-E**	CU, CE
High-function General-purpose Inverter			RX-Series V1 type DeviceNet Communication Unit			**3G3AX-RX-DRT-E**	CU, CE

CIP Safety on DeviceNet System

Product	Appearance	Specifications	Model	Standards
Safety Network Controllers		Safety inputs: 12, Test outputs: 12, Safety outputs: 6 Unit version: 1.0	**NE0A-SCPU01**	CE, UC
		Safety inputs: 16, Test outputs: 4, Safety outputs: 8 Unit version: 2.0	**NE1A-SCPU01-V1**	CE, UC
		Safety inputs: 40, Test outputs: 8, Safety outputs: 8 Unit version: 2.0	**NE1A-SCPU02**	
Safety I/O Terminals		Safety inputs: 12, Test outputs: 4	**DST1-ID12SL-1**	CE, UC
		Safety inputs: 8, Safety outputs (semiconductor): 8, Test outputs: 4	**DST1-MD16SL-1**	
		Safety inputs: 8, Safety outputs (semiconductor): 8, Test outputs: 4	**DST1-XD0808SL-1 ✱**	
		Safety inputs: 4, Safety outputs (relay): 4, Test outputs: 4	**DST1-MRD08SL-1**	
Network Configurator		Components: Installation Disk (CD-ROM: 1 license) Computer: IBM PC/AT or compatible Applicable OS: Windows XP Service Pack 3 (32-bit edition) Windows Vista Service Pack 2 (32-bit edition, 64-bit edition) Windows 7 (32-bit edition, 64-bit edition) Windows 8 (32-bit edition, 64-bit edition) Windows 8.1 (32-bit edition, 64-bit edition) Windows 10 (32-bit edition, 64-bit edition)	**WS02-CFSC1-E**	--
		Components: Upgrade Disk (CD-ROM: 1 license) Computer: IBM PC/AT or compatible Applicable OS: Windows XP Service Pack 3 (32-bit edition) Windows Vista Service Pack 2 (32-bit edition, 64-bit edition) Windows 7 (32-bit edition, 64-bit edition) Windows 8 (32-bit edition, 64-bit edition) Windows 8.1 (32-bit edition, 64-bit edition) Windows 10 (32-bit edition, 64-bit edition)	**WS02-CFSC1-E-UP**	

Note: Spring terminal blocks are mounted on the Unit as a standard feature. Separate terminals are available as required, such as for replacement.
For details, refer to the *CIP Safety on DeviceNet System Catalog* (Cat. No. Z907).

✱ To make setting for the DST1-XD0808SL-1, use Network Configurator version 2.0 or higher.

Configurator

Product	Appearance	Specifications	Model	Standards
DeviceNet Configurator		DeviceNet Configurator Software OS: Windows 2000 (Service Pack2 or higher)/XP/Vista/7 (32bit) ✱	**WS02-CFDC1-E**	--
		PC Card OS: Windows 2000 (Service Pack2 or higher)/XP	**3G8E2-DRM21-EV1**	

✱ To use the software on Windows Vista or Windows 7, download the version upgrade program from the following OMRON website and apply it: www.fa.omron.co.jp/

Software

How to Select Required Support Software for Your Controller

The required Support Software depends on the Controller to connect. Please check the following table when purchasing the Support Software.

Item	Omron PLC System	Omron Machine Automation Controller System
Controller	CS, CJ, CP, and other series	NJ-series
Software	FA Integrated Tool Package CX-One	Automation Software Sysmac Studio

FA Integrated Tool Package CX-One

Product name	Specifications	Number of licenses	Media	Model	Standards
FA Integrated Tool Package CX-One Ver.4.□	The CX-One is a comprehensive software package that integrates Support Software for OMRON PLCs and components. CX-One runs on the following OS. OS: Windows XP (Service Pack 3 or higher, 32-bit version) / Windows Vista (32-bit/64-bit version) / Windows 7 (32-bit/64-bit version) / Windows 8 (32-bit/64-bit version) / Windows 8.1 (32-bit/64-bit version) / Windows 10 (32-bit/64-bit version) CX-One Version 4.□ includes CX-Integrator Ver.3.□. For details, refer to the CX-One catalog (Cat. No. R134)	1 license **✻1**	DVD **✻2**	**CXONE-AL01D-V4**	--

✻1. Multi licenses (3, 10, 30, or 50 licenses) and DVD media without licenses are also available for the CX-One.
✻2. The CX-One is also available on CD (CXONE-AL□□C-V4).

Automation Software Sysmac Studio

Please purchase a DVD and required number of licenses the first time you purchase the Sysmac Studio. DVDs and licenses are available individually. Each model of licenses does not include any DVD.

Product name	Specifications	Number of licenses	Media	Model	Standards
Sysmac Studio Standard Edition Ver.1.□□	The Sysmac Studio is the software that provides an integrated environment for setting, programming, debugging and maintenance of machine automation controllers including the NJ/NX-serie CPU Units, NY-series Industrial PC, EtherCAT Slave, and the HMI. Sysmac Studio runs on the following OS. OS: Windows 7 (32-bit/64-bit version) / Windows 8 (32-bit/64-bit version) / Windows 8.1 (32-bit/64-bit version) / Windows 10 (32-bit/64-bit version) The Sysmac Studio Standard Edition DVD includes Support Software to set up EtherNet/IP Units, DeviceNet slaves, Serial Communications Units, and Support Software for creating screens on HMIs (CX-Designer). Refer to your OMRON website for details.	-- (Media only)	DVD	**SYSMAC-SE200D**	--
		1 license ✻	--	**SYSMAC-SE201L**	--

✻ Multi licenses are available for the Sysmac Studio (3, 10, 30, or 50 licenses).

Product	Appearance	Specifications		Model	Standards
DeviceNet Analyzer		Software OS: Windows 2000 (Service Pack2 or higher)/XP		**WS02-ALDC1-E**	--
NX-Server		DDE Edition OS: Windows 2000 (Service Pack2 or higher)/XP		**WS02-NXDC1-E**	--
Device Inspector		Software OS: Windows 2000 (ServicePack2 or higher)/XP	One-license version Media: DVD	**WS02-DIPC1-E**	--
			Site license	**WS02-DIPC1-ELXX**	

Peripheral Devices

● Models for Standard Cables

Product	Appearance	Specifications		Model
T-branch Tap for 1 branch line		Cable wiring direction: Toward top Cable lock direction: From top Connector screw direction: From top	Provided with 3 parallel clamp connectors with screws (XW4G-05C1-H1-D), standard terminating resistor	**DCN1-1NC**
		Cable wiring direction: Toward side Cable screw direction: From top Connector screw direction: From side	3 parallel connectors with screws (XW4B-05C1-H1-D), standard terminating resistor	**DCN1-1C**
	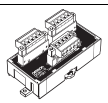	Cable wiring direction: Toward top Cable screw direction: From side Connector screw direction: From top		**DCN1-2C**
	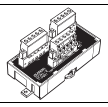	Cable wiring direction: From side Cable screw direction: From top Connector screw direction: From top	3 vertical-type connectors with screws (XW4B-05C1-V1R-D), standard terminating resistor	**DCN1-2R**
T-branch Tap for 3 branch lines	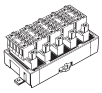	Cable wiring direction: Toward top Cable lock direction: From top Connector screw direction: From top	Provided with 5 parallel clamp connectors with screws (XW4G-05C1-H1-D), standard terminating resistor	**DCN1-3NC**
	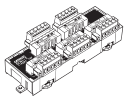	Cable wiring direction: Toward side Cable screw direction: From top Connector screw direction: From side	5 parallel connectors with screws (XW4B-05C1-H1-D), standard terminating resistor	**DCN1-3C**
	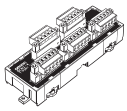	Cable wiring direction: Toward top Cable screw direction: From side Connector screw direction: From top		**DCN1-4C**
	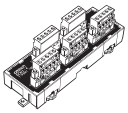	Cable wiring direction: Toward side Cable screw direction: From top Connector screw direction: From top	5 vertical-type connectors with screws (XW4B-05C1-V1R-D), standard terminating resistor	**DCN1-4R**
Power Supply Tap	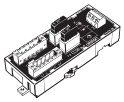	2 connectors, standard terminating resistor, fuse		**DCN1-1P**
Connector	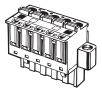	Parallel clamp connector with screws (Connector insertion and wiring performed in the same direction)		**XW4G-05C1-H1-D**
	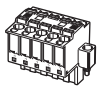	Parallel multi-branching clamp connector with screws (Connector insertion and wiring performed in same direction)		**XW4G-05C4-TF-D**
	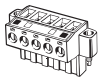	Parallel connector with screws (Connector insertion and wiring performed in the same direction)		**XW4B-05C1-H1-D**
		Parallel connector with screws (Connector insertion and wiring performed in the same direction)		**XW4B-05C4-T-D**
	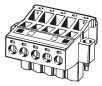	Parallel, multi-branching connector with screws (Connector insertion and wiring performed in the same direction)		**XW4B-05C4-TF-D**
	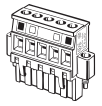	Orthogonal connector with screws (Connector insertion and wiring performed at a right angle)		**XW4B-05C1-V1R-D**
Special Cables	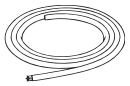	Thin cable Length: 100 m DCA1-5C10-B: Cable color: Blue DCA1-5C10: Cable color: Grey		**DCA1-5C10(-B)**
		Thick cable Length: 100 m DCA2-5C10-B: Cable color: Blue DCA2-5C10: Cable color: Grey		**DCA2-5C10(-B)**
Terminal-block Terminator	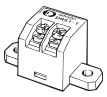	Resistance of 121 Ω		**DRS1-T**

● Models for Flat Cables

Product	Appearance	Specifications	Model	Standards
Conversion Connector for Standard Thin Cable and Flat Cable		Used as a set with the DCN4-TR4 when Thin Cable is branched on a branch line.	**DCN4-BR4D**	UC pending
Power Supply Terminal Block with Terminating Resistor for Flat Cable		Can be used to supply communications power from terminals when flat cable is used.	**DCN4-TP4D**	UC pending
Flat Connector Socket	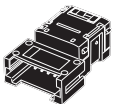	Used as a set with a DCN4-BR4 Flat Connector Plug in the following applications. • Extending the trunk line • T-branching the trunk line into branch lines Used alone in the following applications. • Connecting a DCN4-TM4 Terminating Resistor to the trunk line	**DCN4-TR4**	UC pending
Flat Connector Plug	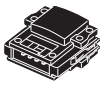	Used as a set with a DCN4-TR4 Flat Connector Socket in the following applications. • Extending the trunk line • T-branching the trunk line into branch lines Used alone in the following applications. • Connecting the communications cable to the Unit • Connecting the communications cable to a DCN4-MD4 Multi-drop Connector	**DCN4-BR4**	UC
Terminating Resistor	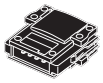	Connector terminating resistor for flat cable. Attached to the DCN4-TR4 Flat Connector Socket at the ends of the trunk line.	**DCN4-TM4**	UC
Flat Cable	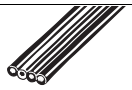	Four-core flat cable (UL 2555) Length: 100 m Conductor diameters: 0.75 mm^2 x 2, 0.5 mm^2 x 2	**DCA4-4F10**	UC
Special Crimping Tool		This is the crimping tool for the following connectors: • DCN4-TR4(-1) Flat Connector Socket • DCN4-BR4 Flat Connector Plug • DCN4-BR4D Conversion Connector for Standard Thin Cable and Flat Cable	**DWT-A01**	--

✻ Delivered in units of ten. Order in a multiple of ten.

● Environment-resistive Models for Thin Wires with M12 Microconnectors

Product	Appearance	Specifications		Model
Sealed Assembling-type Connector (male)		For communications (plug)		**XS2G-D5S7**
Sealed Assembling-type Connector (female)		For communications (socket)		**XS2C-D5S7**
Sealed T-branch Connector	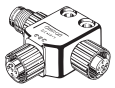	For 1 branch line		**DCN2-1**
Sealed Connector with Terminating Resistor		Plug		**DRS2-1**
		Socket		**DRS2-2**
Cables with Sealed Connectors ✻		Cable with connectors on both ends	Length: 0.5 m	**DCA1-5CNC5W1**
			Length: 1 m	**DCA1-5CN01W1**
			Length: 2 m	**DCA1-5CN02W1**
			Length: 3 m	**DCA1-5CN03W1**
			Length: 5 m	**DCA1-5CN05W1**
			Length: 10 m	**DCA1-5CN10W1**
		Cable with connector on one end (socket)	Length: 0.5 m	**DCA1-5CNC5F1**
			Length: 1 m	**DCA1-5CN01F1**
			Length: 2 m	**DCA1-5CN02F1**
			Length: 3 m	**DCA1-5CN03F1**
			Length: 5 m	**DCA1-5CN05F1**
			Length: 10 m	**DCA1-5CN10F1**
		Cable with connector on one end (plug)	Length: 0.5 m	**DCA1-5CNC5H1**
			Length: 1 m	**DCA1-5CN01H1**
			Length: 2 m	**DCA1-5CN02H1**
			Length: 3 m	**DCA1-5CN03H1**
			Length: 5 m	**DCA1-5CN05H1**
			Length: 10 m	**DCA1-5CN10H1**
Shielded Panel-mounting Connectors (female)		Panel-mounting connector (socket)	Length: 0.5 m	**DCA1-5CNC5P1**
		Panel-mounting connector (socket)	Solder-cup terminals	**XS2P-D522-2**
Shielded Panel-mounting Connectors (male)		Panel-mounting connector (plug)	Length: 0.5 m	**DCA1-5CNC5M1**
		Panel-mounting connector (plug)	Solder-cup terminals	**XS2M-D524-4**

✻ Robot cable type connectors with shielded cables (DCA1-5CN□□□1-R) are also available. Contact your OMRON sales representative for details.

● Environment-resistive Models for Thick Wires with 7/8-16UN Miniconnectors

Product	Appearance	Specification		Model
Shielded T-branch Connector	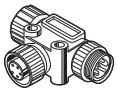	T-branch Connector		**DCN3-11**
		T-branch Connector (Branch connector is M12)		**DCN3-12**
Shielded Terminating Resistor		Plug Connector		**DRS3-1**
Connectors with Shielded Cables		Cables with connectors at both ends	Length: 1 m	**DCA2-5CN01W1**
			Length: 2 m	**DCA2-5CN02W1**
			Length: 5 m	**DCA2-5CN05W1**
			Length: 10 m	**DCA2-5CN10W1**
		Cables with connector socket at one end	Length: 1 m	**DCA2-5CN01F1**
			Length: 2 m	**DCA2-5CN02F1**
			Length: 5 m	**DCA2-5CN05F1**
			Length: 10 m	**DCA2-5CN10F1**
		Cables with connector plug at one end	Length: 1 m	**DCA2-5CN01H1**
			Length: 2 m	**DCA2-5CN02H1**
			Length: 5 m	**DCA2-5CN05H1**
			Length: 10 m	**DCA2-5CN10H1**
		Cables with connectors at both ends Thin cable M12 socket	Length: 1 m	**DCA1-5CN01W5**
			Length: 2 m	**DCA1-5CN02W5**
			Length: 5 m	**DCA1-5CN05W5**
			Length: 10 m	**DCA1-5CN10W5**
Panel-mounting Connectors (Female)		Panel-mounting Connector Sockets with 0.5-m cable		**DCA2-5CNC5P1**
Panel-mounting Connectors (Male)		Panel-mounting Connector Plugs with 0.5-m cable		**DCA2-5CNC5M1**
Panel-mounting Connectors (Male)		Panel-mounting Connector Plugs DIP terminals		**XS4M-D521-1**

● Environment-resistive Models for Thin Wires with M12 Smart Click Microconnectors Smartclick

Product	Appearance	Specifications		Model
Sealed T-branch Connector	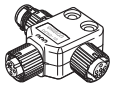	For 1 branch line		**DCN2-1S**
Sealed Connector with Terminating Resistor		Plug		**DRS2-1S**
		Socket		**DRS2-2S**
Cables with Sealed Connectors ✻		Cable with connectors on both ends	Length: 0.5 m	**DCA1-5CSC5W1**
			Length: 1 m	**DCA1-5CS01W1**
			Length: 2 m	**DCA1-5CS02W1**
			Length: 3 m	**DCA1-5CS03W1**
			Length: 5 m	**DCA1-5CS05W1**
			Length: 10 m	**DCA1-5CS10W1**
		Cable with connector socket on one end (socket)	Length: 0.5 m	**DCA1-5CSC5F1**
			Length: 1 m	**DCA1-5CS01F1**
			Length: 2 m	**DCA1-5CS02F1**
			Length: 3 m	**DCA1-5CS03F1**
			Length: 5 m	**DCA1-5CS05F1**
			Length: 10 m	**DCA1-5CS10F1**
		Cable with connector socket on one end (plug)	Length: 0.5 m	**DCA1-5CSC5H**
			Length: 1 m	**DCA1-5CS01H1**
			Length: 2 m	**DCA1-5CS02H1**
			Length: 3 m	**DCA1-5CS03H1**
			Length: 5 m	**DCA1-5CS05H1**
			Length: 10 m	**DCA1-5CS10H1**
Shielded Branch Relay Box		4 ports	0.5-m cable	**DCN2-S4C5H1**
		8 ports	0.5-m cable	**DCN2-S8C5H1**

✻ Robot cable type connectors with shielded cables (DCA1-5CN□□□1-R) are also available. Contact your OMRON sales representative for details.

● Cables with Connectors Compatible with MULTIPLE I/O TERMINAL Connectors
Models with Fujitsu Connectors

Product		Appearance	Cable length L (mm)	Model
Cable with Connectors XW2Z-R□C	32 inputs	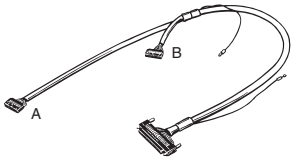	A: 1,000, B: 750	**XW2Z-RI100C-75**
			A: 1,500, B: 1,250	**XW2Z-RI150C-125**
			A: 2,000, B: 1,750	**XW2Z-RI200C-175**
			A: 3,000, B: 2,750	**XW2Z-RI300C-275**
			A: 5,000, B: 4,750	**XW2Z-RI500C-475**
	32 outputs		A: 1,000, B: 750	**XW2Z-RO100C-75**
			A: 1,500, B: 1,250	**XW2Z-RO150C-125**
			A: 2,000, B: 1,750	**XW2Z-RO200C-175**
			A: 3,000, B: 2,750	**XW2Z-RO300C-275**
			A: 5,000, B: 4,750	**XW2Z-RO500C-475**
	16 I/O points	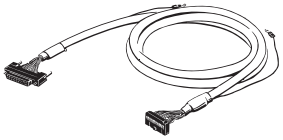	1,000	**XW2Z-R100C**
			1,500	**XW2Z-R150C**
			2,000	**XW2Z-R200C**
			3,000	**XW2Z-R300C**
			5,000	**XW2Z-R500C**
Cable with Connectors XW2Z	16 I/O points	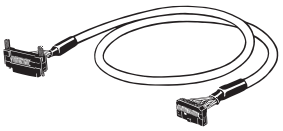	500	**XW2Z-050A**
			1,000	**XW2Z-100A**
			1,500	**XW2Z-150A**
			2,000	**XW2Z-200A**
			3,000	**XW2Z-300A**
			5,000	**XW2Z-500A**
	32 I/O points		500	**XW2Z-050B**
			1,000	**XW2Z-100B**
			1,500	**XW2Z-150B**
			2,000	**XW2Z-200B**
			3,000	**XW2Z-300B**
			5,000	**XW2Z-500B**

MEMO

Information

Related Manuals 176
Introduction of the Switch Mode Power Supply 177

Related Manuals

Manuals

Cat.No.	Product Group	Models	Name	Type
W267	-	-	DeviceNet	Operation Manual
W497	Master	CJ1W-DRM21	DeviceNet Units for NJ-Series CPU Units	Operation Manual
W380	Master	CS1W-DRM21(-V1),CJ1W-DRM21	DeviceNet Units	Operation Manual
W452	Master	NSJ	NSJ Controllers	Operation Manual
W381	Master	3G8F7-DRM21-E	DeviceNet PCI Board	Operation Manual
W404	Smart Slaves	DRT2 Series	DRT2 Series DeviceNet Slaves	Operation Manual
W454	SmartSlice	GRT1-DRT	DeviceNet Communications Unit	Operation Manual
W455	SmartSlice	GRT1	Slice I/O Units	Operation Manual
W348	Multiple I/O Terminals	DRT1-COM GT1 Series	DeviceNet Multiple I/O Terminal	Operation Manual
W353	Intelligent Slaves (PLC Units)	CPM2C-S1□0C-DRT	CPM1/CPM1A/CPM2A/CPM2C/SRM1(-V2) Programmable Controllers	Programming Manual
Z129	Intelligent Slaves	V680-HAM42-DRT	V600-HAM42-DRT Intelligent Flag III	Operation Manual
Z249	Intelligent Slaves	V680	ID Controller	User's Manual
N136	Intelligent Slaves	K3HB-R/-P/-C	Digital Indicators	User's Manual
N129	Intelligent Slaves	K3HB-DRT	Digital Indicators Communications	User's Manual
Z182	Intelligent Slaves	E5AR/E5ER	Digital Controller	User's Manual
H124	Intelligent Slaves	E5AR/E5ER	Digital Controller DeviceNet Communications	User's Manual
H142	Intelligent Slaves	EJ1	Modular Temperature Controller	User's Manual
H155	Intelligent Slaves	EJ1	DeviceNet Communications Unit for EJ1 Temperature Controllers	Operation Manual
I581	Intelligent Slaves	3G3AX-MX2-DRT-E 3G3AX-RX-DRT-E	MX2 series/RX series V1 type DeviceNet Communication Unit	User's Manual
Z905	CIP Safety on DeviceNet	WS02-CFSC1-E	CIP Safety on DeviceNet System	Configuration Manual
Z906	CIP Safety on DeviceNet	NE1A Series	CIP Safety on DeviceNet Safety Network Controller	Operation Manual
Z916	CIP Safety on DeviceNet	NE0A Series	CIP Safety on DeviceNet Safety Network Controller NE0A Series	Operation Manual
Z904	CIP Safety on DeviceNet	DST1 Series	CIP Safety on DeviceNet Safety I/O Terminals	Operation Manual
W382	Configurator	WS02-CFDC1-E,3G8F5-DRM21-E,3G8E2-DRM21-EV1	DeviceNet Configurator	Operation Manual
W504	Software	SYSMAC-SE2□□□	Sysmac Studio	Operation Manual

Introduction of the Switch Mode Power Supply

OMRON Switch Mode Power Supplies support a wide range of applications.

Recommendation1
Quality you can see
S8VS

This power supply shows status, maintenance time, and other information

- Notifies you when the power supply needs maintenance, allowing maintenance at the optimum time. Helps reduce maintenance costs.
- Display monitor function makes it easy to check equipment startup.

* Only on types with an indication monitor

Recommendation2
Innovative ease-of-use
S8JX

Simple power supply with a short body and easy installation: the ultimate in ease-of-use

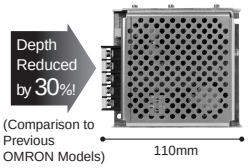

- One of the shortest bodies in the industry makes it easy to design smaller and slimmer panels and devices.
- Front, top, DIN rail, and other installation types match the application and reduce installation man-hours.
- Fan-less up to 300 W, maintenance not necessary

Model		Model S8VS			Model S8JX-G	Model S8JX-P
Appearance						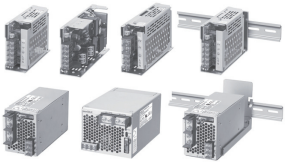
Features		• Compact power supply for installation on a DIN rail • Indication monitor and maintenance forecast monitor models also available • Economy type series added to indication monitors			• Power supply with short depth for convenient installation • Installation fittings included (front-mounted model) • Simple and low cost • DC input model available	• With harmonic current suppression function • Slim, low noise
Lineup Power rating, output voltage (DC)		Standard model	With indication monitor	With indication monitor but without alarm output		
1500W						
:						
600W					600W 5V, 12V, 24V, 48V	600W 5V, 12V, 24V, 48V
480W		480W 24V	480W 24V			
300W					300W 5V, 12V, 24V, 48V	300W 5V, 12V, 24V, 48V
240W		240W 24V	240W 24V	240W 24V		
180W		180W 24V	180W 24V	180W 24V		
150W					150W 5V, 12V, 24V, 48V	150W 5V, 12V, 24V, 48V
120W		120W 24V	120W 24V	120W 24V		
100W					100W 5V, 12V, 24V, 48V	100W 5V, 12V, 24V, 48V
90W		90W 24V	90W 24V	90W 24V		
75W						
60W		60W 24V	60W 24V			
50W					50W 5V, 12V, 24V, 48V	50W 5V, 12V, 24V, 48V
30W		30W 5V,12V,24V			35W 5V, 12V, 15V, 24V, 48V	
25W						
15W		15W 5V,12V,24V			15W 5V, 12V, 15V, 24V, 48V	
10W						
7.5W						
3W						
Input voltage		AC 100 - 240 V (DC 80 - 370 V) *3			15 W - 150 W model : AC 100 - 240 V (DC 80 - 370 V) *2, *3 300 W, 600 W model : AC 100 - 120 V / AC 200 - 240 V switching	AC 100 - 240 V (DC 80 - 370 V) *3
Installation	DIN rail	Yes			Yes (DIN rail mounting model only) * Excluding 600 W model	Yes (DIN rail mounting model only)
	Direct connection	Yes (Optional installation fitting required) * The 480 W type cannot be connected directly.			Yes	Yes
Harmonic current suppression function		Yes			No	Yes
Added functions	Parallel operation	No			Yes (300 W and 600 W models only)	Yes (300 W and 600 W models only)
	Serial operation	Yes (24V type only External diode required.)			Yes (External diode required.)	Yes (External diode required.)
Approvals *1		UL, CE			UL, CE	UL, CE
Catalogue number		T026-E1			T041-E1	T041-E1

*1. For details on approvals, visit our Web site (www.ia.omron.com/).
*2. Model S8JX-G15005□□ only, AC 100 - 120 V / AC 200 - 240 V marked number (DC input not available).
*3. The scope of application of EC directives and various safety standards (UL, EN, etc.) is AC 100 V to 240 V (AC 85 to 264 V).

Read and Understand this Catalog

Please read and understand this catalog before purchasing the product. Please consult your OMRON representative if you have any questions or comments.

Warranty and Limitations of Liability

WARRANTY

OMRON's exclusive warranty is that the products are free from defects in materials and workmanship for a period of one year (or other period if specified) from date of sale by OMRON.
OMRON MAKES NO WARRANTY OR REPRESENTATION, EXPRESS OR IMPLIED, REGARDING NON-INFRINGEMENT, MERCHANTABILITY, OR FITNESS FOR PARTICULAR PURPOSE OF THE PRODUCTS. ANY BUYER OR USER ACKNOWLEDGES THAT THE BUYER OR USER ALONE HAS DETERMINED THAT THE PRODUCTS WILL SUITABLY MEET THE REQUIREMENTS OF THEIR INTENDED USE. OMRON DISCLAIMS ALL OTHER WARRANTIES, EXPRESS OR IMPLIED.

LIMITATIONS OF LIABILITY

OMRON SHALL NOT BE RESPONSIBLE FOR SPECIAL, INDIRECT, OR CONSEQUENTIAL DAMAGES, LOSS OF PROFITS OR COMMERCIAL LOSS IN ANY WAY CONNECTED WITH THE PRODUCTS, WHETHER SUCH CLAIM IS BASED ON CONTRACT, WARRANTY, NEGLIGENCE, OR STRICT LIABILITY.

In no event shall the responsibility of OMRON for any act exceed the individual price of the product on which liability is asserted.

IN NO EVENT SHALL OMRON BE RESPONSIBLE FOR WARRANTY, REPAIR, OR OTHER CLAIMS REGARDING THE PRODUCTS UNLESS OMRON'S ANALYSIS CONFIRMS THAT THE PRODUCTS WERE PROPERLY HANDLED, STORED, INSTALLED, AND MAINTAINED AND NOT SUBJECT TO CONTAMINATION, ABUSE, MISUSE, OR INAPPROPRIATE MODIFICATION OR REPAIR.

Application Considerations

SUITABILITY FOR USE

OMRON shall not be responsible for conformity with any standards, codes, or regulations that apply to the combination of the product in the customer's application or use of the product.

At the customer's request, OMRON will provide applicable third party certification documents identifying ratings and limitations of use that apply to the products. This information by itself is not sufficient for a complete determination of the suitability of the products in combination with the end product, machine, system, or other application or use.

The following are some examples of applications for which particular attention must be given. This is not intended to be an exhaustive list of all possible uses of the products, nor is it intended to imply that the uses listed may be suitable for the products:

- Outdoor use, uses involving potential chemical contamination or electrical interference, or conditions or uses not described in this document.
- Nuclear energy control systems, combustion systems, railroad systems, aviation systems, medical equipment, amusement machines, vehicles, safety equipment, and installations subject to separate industry or government regulations.
- Systems, machines, and equipment that could present a risk to life or property.
  Please know and observe all prohibitions of use applicable to the products.

NEVER USE THE PRODUCT FOR AN APPLICATION INVOLVING SERIOUS RISK TO LIFE OR PROPERTY WITHOUT ENSURING THAT THE SYSTEM AS A WHOLE HAS BEEN DESIGNED TO ADDRESS THE RISKS, AND THAT THE OMRON PRODUCT IS PROPERLY RATED AND INSTALLED FOR THE INTENDED USE WITHIN THE OVERALL EQUIPMENT OR SYSTEM.

PROGRAMMABLE PRODUCTS

OMRON shall not be responsible for the user's programming of a programmable product, or any consequence thereof.

Disclaimers

CHANGE IN SPECIFICATIONS

Product specifications and accessories may be changed at any time based on improvements and other reasons. Consult with your OMRON representative at any time to confirm actual specifications of purchased product.

DIMENSIONS AND WEIGHTS

Dimensions and weights are nominal and are not to be used for manufacturing purposes, even when tolerances are shown.

PERFORMANCE DATA

Performance data given in this catalog is provided as a guide for the user in determining suitability and does not constitute a warranty. It may represent the result of OMRON's test conditions, and the users must correlate it to actual application requirements. Actual performance is subject to the OMRON Warranty and Limitations of Liability.

Note: Do not use this document to operate the Unit.

OMRON Corporation **Industrial Automation Company**

Kyoto, JAPAN

Contact: www.ia.omron.com

Regional Headquarters

OMRON EUROPE B.V.
Wegalaan 67-69, 2132 JD Hoofddorp
The Netherlands
Tel: (31)2356-81-300/Fax: (31)2356-81-388

OMRON ELECTRONICS LLC
2895 Greenspoint Parkway, Suite 200
Hoffman Estates, IL 60169 U.S.A.
Tel: (1) 847-843-7900/Fax: (1) 847-843-7787

OMRON ASIA PACIFIC PTE. LTD.
No. 438A Alexandra Road # 05-05/08 (Lobby 2),
Alexandra Technopark,
Singapore 119967
Tel: (65) 6835-3011/Fax: (65) 6835-2711

OMRON (CHINA) CO., LTD.
Room 2211, Bank of China Tower,
200 Yin Cheng Zhong Road,
PuDong New Area, Shanghai, 200120, China
Tel: (86) 21-5037-2222/Fax: (86) 21-5037-2200

Authorized Distributor:

© OMRON Corporation 2015 All Rights Reserved.
In the interest of product improvement,
specifications are subject to change without notice.

CSM_20_9_0718

Cat. No. Q102-E1-14 0715

Mouser Electronics

Authorized Distributor

Click to View Pricing, Inventory, Delivery & Lifecycle Information:

Omron:

3G8F7-DRM21-E

Общество с ограниченной ответственностью «МосЧип» ИНН 7719860671 / КПП 771901001
Адрес: 105318, г.Москва, ул.Щербаковская д.3, офис 1107

Данный компонент на территории Российской Федерации

Вы можете приобрести в компании MosChip.

Для оперативного оформления запроса Вам необходимо перейти по данной ссылке:

http://moschip.ru/get-element

Вы можете разместить у нас заказ для любого Вашего проекта, будь то серийное производство или разработка единичного прибора.

В нашем ассортименте представлены ведущие мировые производители активных и пассивных электронных компонентов.

Нашей специализацией является поставка электронной компонентной базы двойного назначения, продукции таких производителей как XILINX, Intel (ex.ALTERA), Vicor, Microchip, Texas Instruments, Analog Devices, Mini-Circuits, Amphenol, Glenair.

Сотрудничество с глобальными дистрибьюторами электронных компонентов, предоставляет возможность заказывать и получать с международных складов практически любой перечень компонентов в оптимальные для Вас сроки.

На всех этапах разработки и производства наши партнеры могут получить квалифицированную поддержку опытных инженеров.

Система менеджмента качества компании отвечает требованиям в соответствии с ГОСТ Р ИСО 9001, ГОСТ РВ 0015-002 и ЭС РД 009

Офис по работе с юридическими лицами:

105318, г.Москва, ул.Щербаковская д.3, офис 1107, 1118, ДЦ «Щербаковский»

Телефон: +7 495 668-12-70 (многоканальный)

Факс: +7 495 668-12-70 (доб.304)

E-mail: info@moschip.ru

Skype отдела продаж:
moschip.ru
moschip.ru_4
moschip.ru_6
moschip.ru_9