UM11009

PCA9745B demonstration board OM13524

Rev. 1 — 23 June 2016 **User manual**

Document information

Info	Content
Keywords	SPI-bus, PCA9745B, RGB and White LEDs, 16-channel x 8-bit PWMs
Abstract	The OM13524 demo board is easy to test and design for the PCA9745B, a 16-channel SPI 4-wire bus 57 mA constant current and outputs allow up to 20 V for LED supply. This demo board, along with the Win-I2CUSB hardware board or Fm+ development board (OM13260), provides an easy to use evaluation platform.

Revision history

Rev	Date	Description
1	20160623	Initial version

Contact information

For more information, please visit: http://www.nxp.com

All information provided in this document is subject to legal disclaimers.

© NXP Semiconductors N.V. 2016. All rights reserved.

1. Introduction

The PCA9745B evaluation board features LEDs for color mixing, blinking and dimming demonstrations. A graphical interface allows the user to easily explore the different functions of the driver. The board can be connected in series with other SPI-bus demo-boards to create an evaluation system.

The IC communicates to the host via the industry standard SPI-bus port. The evaluation software runs under Microsoft Windows PC platform.

2. Features

- A complete evaluation platform for the PCA9745B 16-channel SPI-bus constant current LED driver
- Easy to use GUI based software demonstrates the capabilities of the PCA9745B
- On-board four white and four RGB LEDs for visual experience
- Convenient test points for easy scope measurements and signal access
- USB interface to the host PC
- No external power supply required

3. Getting started

3.1 Assumptions

Familiarity with the SPI-bus is helpful but not required.

3.2 Static handling requirements

CAUTION

This device is sensitive to Electro Static Discharge (ESD). Therefore care should be taken during transport and handling. You must use a ground strap or touch the PC case or other grounded source before unpacking or handling the hardware.

3.3 Minimum system requirements

- PC Pentium 60 processor (or equivalent), 8 MB RAM, 10 MB of hard drive space
- One USB port (either 2.0 or 1.1 compatible)
- Windows 98SE, ME, 2000, XP, or Vista
- Fm+ development board (OM13260) or WIN-I2CUSB board (from www.demoboard.com)

3.4 Power requirements

The NXP demonstration boards OM13260 and OM13524 hardware obtain power from the PC USB port. Care should be taken not to exceed the USB port current capabilities.

All information provided in this document is subject to legal disclaimers.

© NXP Semiconductors N.V. 2016. All rights reserved.

4. Installation

4.1 Fm+ development board and WIN-SPIUSB software

The OM13524 is a daughter card to the OM13260 Fm+ I2C bus development board with SPI driver which is part of the Fm+ development board kit (OM13320). You may download the software, user manual, and find ordering information at the NXP web site: http://www.nxp.com/demoboard/OM13320.html#documentation

The Win-SPIUSB software from The Boardshop runs on Windows 98SE, ME, 2000, and XP and is compatible with any PC hardware having a minimum of a Pentium processor and an USB port. The software allows the user to select one of the SPI-bus driver from a menu and also provides a Universal mode (SPI Expert mode) to allow users to create their own SPI-bus commands with the same SPI-bus devices.

4.2 OM13524 connection to Fm+ I2C bus development board

The OM13260 Fm+ I2C bus development board should be disconnected from your PC before connecting the OM13524 PCA9745B demo board on to it. The OM13524 board has a 9-pin male connector (CON1) that connects to the 8-pin male connector (CN16) on the Fm+ I2C bus development board using six jumper wires as shown in the Fig 1.

CON1(9-pin) ←→ **CN16** (8-pin)

3.3V (pin 4) ← +3V3 (pin 2)

SCL (pin 5) ← MCU_SCLK (pin 4)

GND (pin 6) ← GND (pin 7)

SDA (pin 7) ← MCU_MOSI (pin 3)

SPI_SDO (pin 8) → MCU_MISO (pin 1)

SPI_CSN (pin 9) ← MCU_SSN (pin 6)

All information provided in this document is subject to legal disclaimers.

© NXP Semiconductors N.V. 2016. All rights reserved.

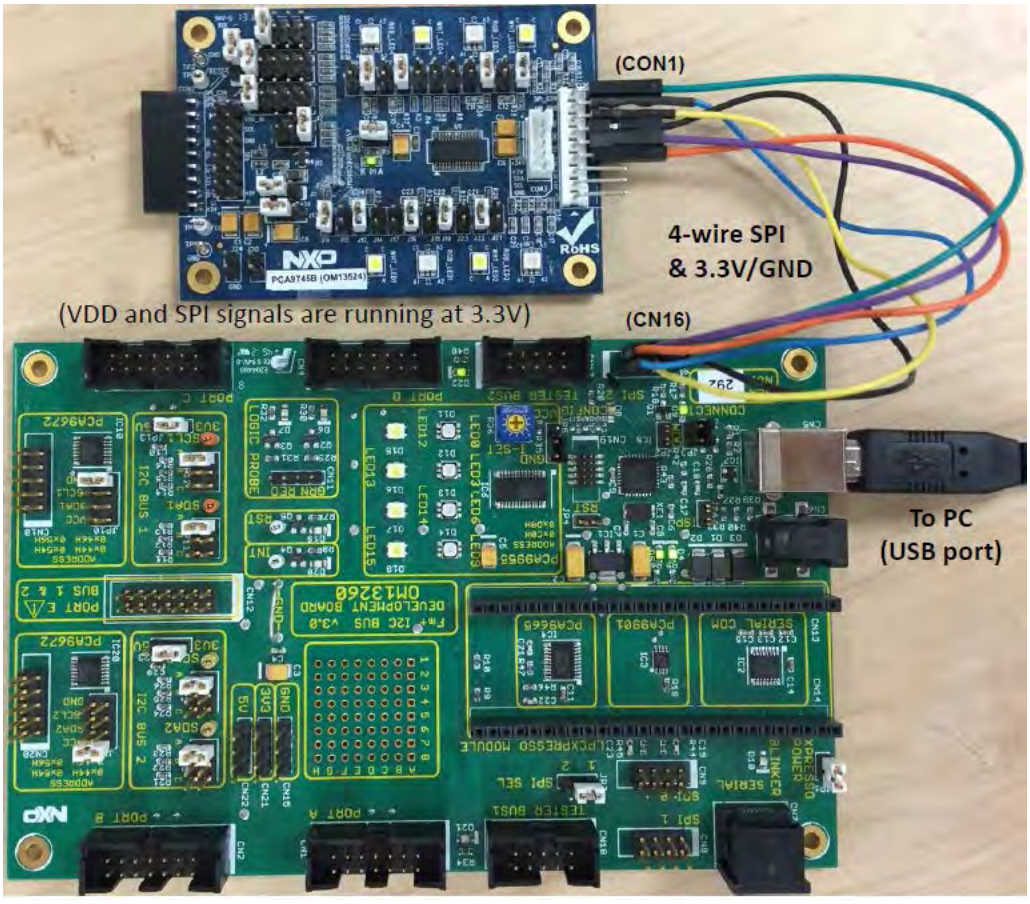

Fig 1. PCA9745B demo board (OM13524) connecting to the Fm+ development board (OM13260)

4.3 OM13524 connection to WIN-I2CUSB hardware adapter board

The Win-I2CUSB board should be disconnected from your PC before connecting the OM13524 PCA9745B demo board on to it. The OM13524 board has a 9-pin male connector (CON1) that connects to the 14-pin male connector (J1) on the Win-I2CUSB board using six jumper wires as shown in the Fig 2.

CON1(9-pin) ←→ **J1** (14-pin)

3.3V (pin 3) ← 3.3V (pin 2)a

SCL (pin 5) ← SCLK (pin 4)

GND (pin 6) ← GND (pin 6)

SDA (pin 7) ← MOSI (pin 8)

SPI_SDO (pin 8) → MISO (pin 10)

SPI_CSN (pin 9) ← SSN (pin 12)

Connect 6-jumper wires between the OM13524 board and the Win-I2CUSB board before connecting the USB cable. Once both boards are connected, connect the USB cable and start the Win-SPIUSB software. You are now ready to evaluate the PCA9745B.

All information provided in this document is subject to legal disclaimers.

© NXP Semiconductors N.V. 2016. All rights reserved.

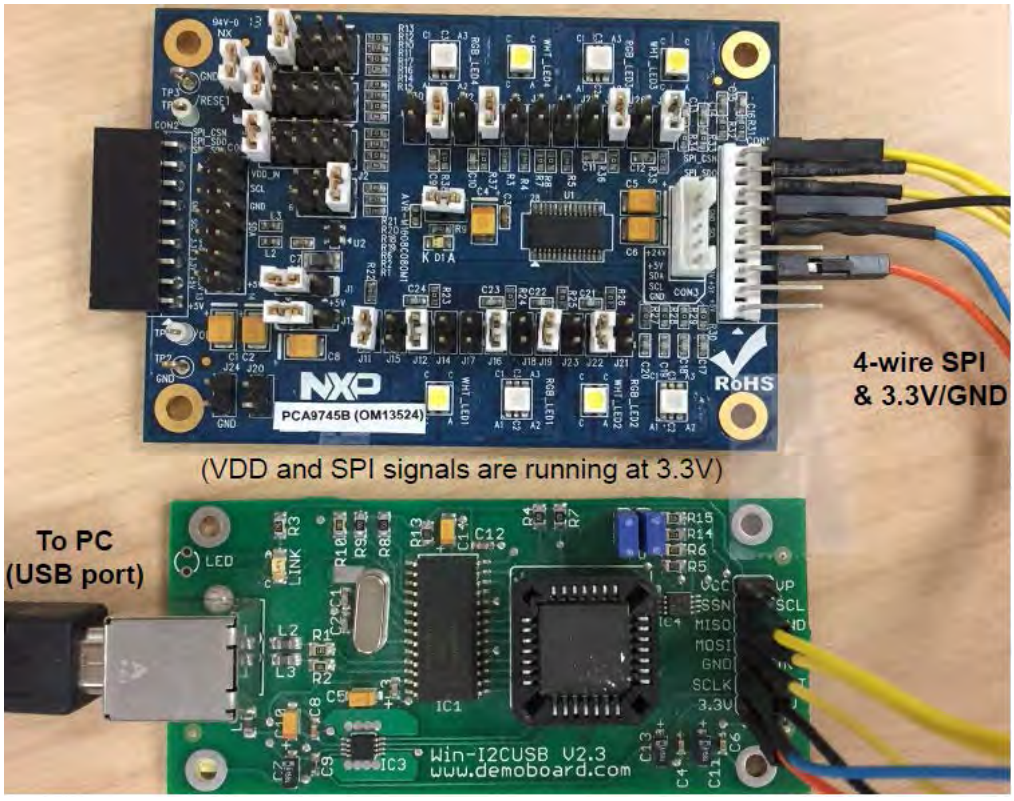

Fig 2. PCA9745B demo board (OM13524) connecting to the WIN-I2CUSB board

All information provided in this document is subject to legal disclaimers.

© NXP Semiconductors N.V. 2016. All rights reserved.

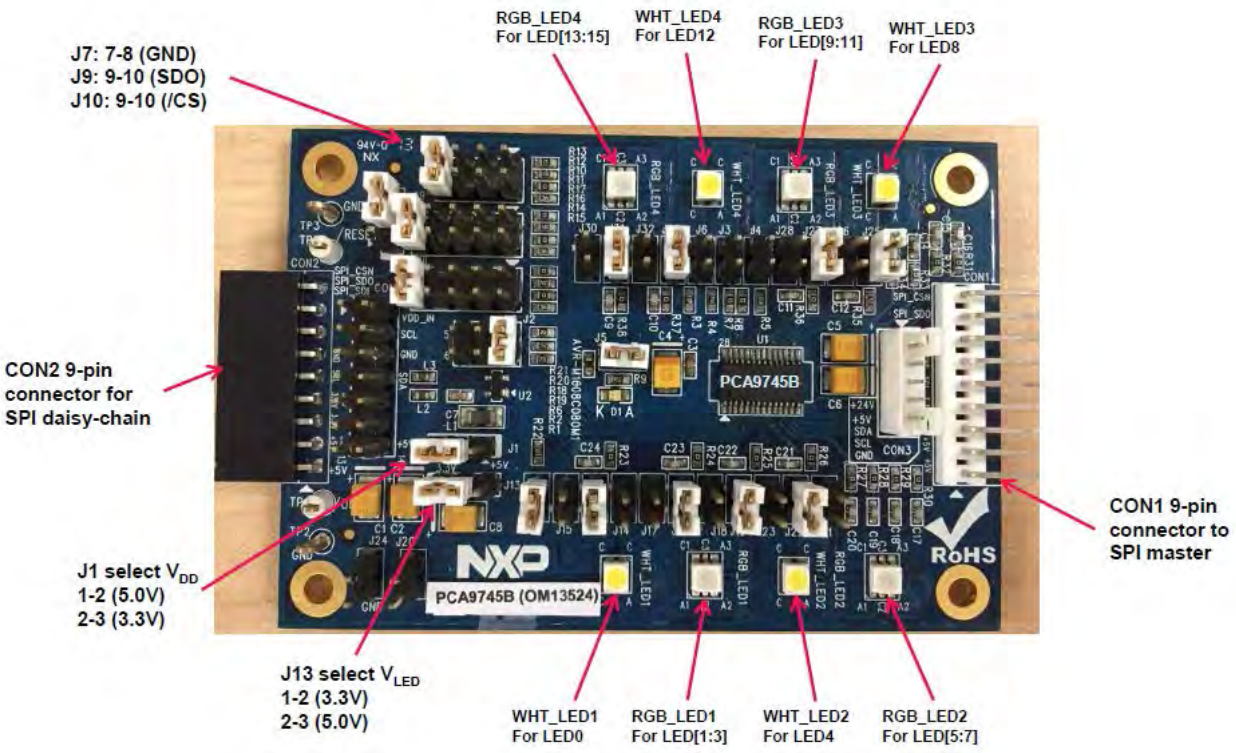

Fig 3. PCA9745B demo board (OM13524)

All information provided in this document is subject to legal disclaimers.

© NXP Semiconductors N.V. 2016. All rights reserved.

5. Hardware description

Fig 3 shows the following items on the hardware:

- CON1 (9-pin male connector) is connected to SPI master device.
- CON2 (9-pin female connector) is connected to next SPI daisy-chain device.
- CON3 (5-pin male connector) is no use for PCA9745B SPI device.
- CON4 (14-pin male connector) is connected to J1 on WIN-I2CUSB hardware board as I2C master device to drive this demo board (no connect for SPI signals)
- J1 selects V_{DD} power for PCA9745B, connected 1-2 for V_{DD} = 5 V and connected 2-3 for V_{DD} = 3.3 V.
- J13 selects LED power for all LEDs, connected 1-2 for V_{LED} = 3.3 V and connected 2-3 for V_{LED} = 5 V.
- J7 (7-8), J9 (9-10) and J10 (9-10) to select Vss for pin 2, SDO for pin 3 and /CS for pin 4 respectively.
- LED[0:15] 16-channel output to drive four White LEDs (WHT_LED[1:4]) and four RGB LEDs (RGB_LED[1:4]).
- TP2 and TP3 are GND pins for probing use.
- TP1 can be connected as external reset signal to /RESET pin when J6 is open.
- TP4 can be connected as external output enable signal to /OE pin for blinking/dimming control when J11 is open.
- All jumpers default setting and function as shown in Table 1.

Table 1. Jumper settings for test and evaluation

Jumper	Default setting	Comment
J1 (3-pin)	2-3 (V_{DD} = +3.3V)	This jumper is used to select V_{DD} for PCA9745B 1-2: select +5V 2-3: select +3.3V
J2 (3x2-pin)	1-2 (Rext=1 K, 57 mA@max)	This 3x2 jumper is used to select Rext (pin1) value for PCA9745B 1-2: select Rext = 1K and max. o/p current is 57.3 mA 3-4: select Rext = 1.5K and max. o/p current is 38.25 mA 5-6: select Rext = 2K and max. o/p current is 28.6 mA
J3 (2-pin)	Open	Short: external 1.1K pull-up resistor for SDI on PCA9745B Open: no external pull-up resistor for SDI on PCA9745B
J4 (2-pin)	Open	Short: external 1.1K pull-up resistor for SCLK on PCA9745B Open: no external pull-up resistor for SCLK on PCA9745B
J5 (2-pin)	Short	Short: connect VDD_IN to V_{DD} (pin28) on PCA9745B Open: connect current meter to measure the I_{DD} on PCA9745B
J6 (2-pin)	Open	Short: force /RESET (pin25) to GND Open: 10K pull-up /RESET (pin25) to V_{DD}
J7 (4x2-pin)	7-8	This 4x2 jumper is used to select input value for pin 2 Open: floating 1-2: select V_{DD} 3-4: select pull-up with 31.6K 5-6: select pull-down with 34.8K 7-8: select GND

All information provided in this document is subject to legal disclaimers.

© NXP Semiconductors N.V. 2016. All rights reserved.

Jumper	Default setting	Comment
J8 (3-pin)	2-3	This jumper is used to select bus mode 1-2: select normal I2C or SPI addressable bus mode 2-3: select SPI daisy-chain bus mode for PCA9745B
J9 (5x2-pin)	9-10	This 5x2 jumper is used to select input value for pin 3 Open: floating 1-2: select V_{DD} 3-4: select pull-up with 31.6K 5-6: select pull-down with 34.8K 7-8: select GND 9-10: SDO for last slave device of PCA9745B in SPI daisy-chain
J10 (5x2-pin)	9-10	This 5x2 jumper is used to select input value for pin 4 Open: floating 1-2: select V_{DD} 3-4: select pull-up with 31.6K 5-6: select pull-down with 34.8K 7-8: select GND 9-10: CSN (Chip Select) SPI bus mode for PCA9745B
J11 (2-pin)	Short	Short: force /OE (pin5) to GND, to enable LEDs output Open: 10K pull-up /OE (pin5) to V_{DD} when apply external clock for blinking/dimming on TP4 (test point)
J12, J16 J19, J22 (2-pin)	Short	These jumpers are used to open the WHT_LED1 or RGB_LED1 J12 to control white LED, J16 to control Red LED, J19 to control Green LED, J22 to control Blue LED Open: connect current meter to measure one of the LEDs output current or open one of the LEDs output for detecting an LED open condition in one of EFLAGn register Short: normal operation for WHT_LED1 and RGB_LED1
J13 (3-pin)	1-2 (V_{LED} = +3.3V)	This jumper is used to select LED supply voltage 1-2: select +3.3V for all LEDs supply voltage 2-3: select +5V for all LEDs supply voltage Open (no jumper): select external voltage from J20 (≤ +20V) and J24 (GND)
J14, J18 (2-pin)	Open	These jumpers are used to merge the LED[0:2] outputs together for driving higher LED current. Open: normal operation for the LED[0:2] Short: When short J14/J18 and open J16/J19 to combine LED[0:2] outputs to drive LED0. When short J14 only and open J16 to combine LED[0:1] outputs to drive LED0
J15, J17 J21, J23 (2-pin)	Open	These jumpers are used to short the WHT_LED1 or RGB_LED1 J15 to control white LED, J17 to control Red LED, J23 to control Green LED, J21 to control Blue LED Open: normal operation for WHT_LED1 and RGB_LED1 Short: to short one of the LEDs for detecting an LED short condition in one of EFLAGn register
J20 (2-pin)	+20V Input	External ≤ +20V input for LEDs supply voltage The J13 must be OPEN to supply this ≤ +20V external voltage to all LEDs.

All information provided in this document is subject to legal disclaimers.

© NXP Semiconductors N.V. 2016. All rights reserved.

Jumper	Default setting	Comment
J24 (2-pin)	GND	External GND input for LEDs supply voltage
J25, J27 J29, J31 (2-pin)	Short	These jumpers are used to open the WHT_LED4 or RGB_LED4 J25 to control white LED, J27 to control Red LED, J29 to control Green LED, J31 to control Blue LED Open: connect current meter to measure one of the LEDs output current or open one of the LEDs output for detecting an LED open condition in one of EFLAGn register Short: normal operation for WHT_LED4 and RGB_LED4
J26, J28 J30, J32 (2-pin)	Open	These jumpers are used to short the WHT_LED4 or RGB_LED4 J26 to control white LED, J28 to control Red LED, J32 to control Green LED, J30 to control Blue LED Open: normal operation for WHT_LED4 and RGB_LED4 Short: to short one of the LEDs for detecting an LED short condition in one of EFLAGn register
CON1	9-pin male connector	This 9-pin male connector is connected to SPI master device or next daisy-chain device
CON2	9-pin female connector	This 9-pin female connector is connected to next SPI daisy-chain device
CON3	5-pin male connector	No use for PCA9745B SPI device
CON4	14-pin header	This 14-pin header is used to connect to Win-I2CUSB hardware board as I2C master device to drive this demo board (no use for PCA9745B)
TP1	Test Point 1	This TP1 is used to drive /RESET input pin25 from external when J6 is OPEN
TP2, TP3	Test Point 2/3	These two test points are GND for probe ground connection
TP4	Test Point 4	This TP4 is used to drive /OE input pin5 from external when J11 is OPEN

All information provided in this document is subject to legal disclaimers.

© NXP Semiconductors N.V. 2016. All rights reserved.

6. Schematic

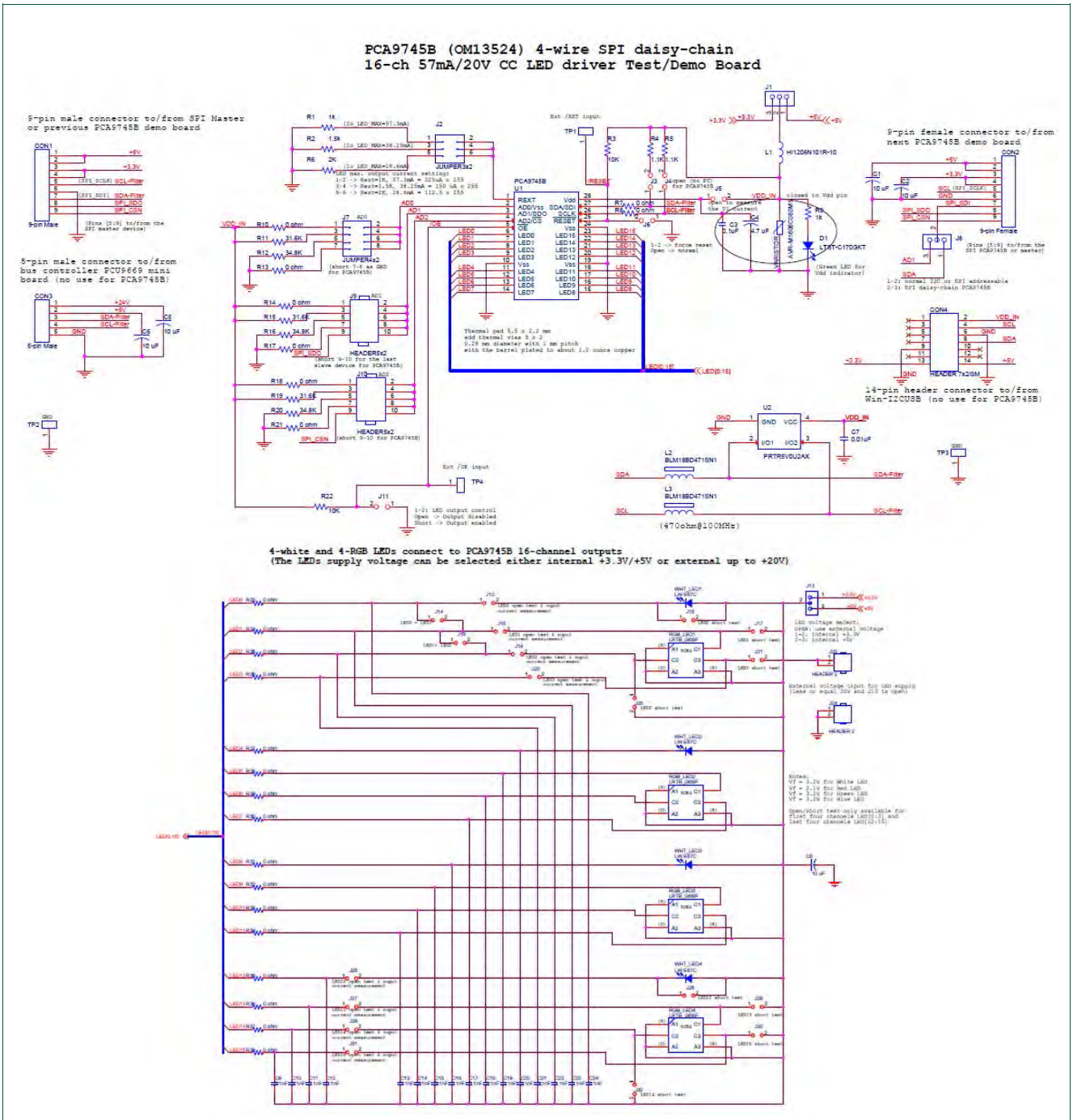

Fig 4. PCA9745B demo board schematic

All information provided in this document is subject to legal disclaimers.

© NXP Semiconductors N.V. 2016. All rights reserved.

7. OM13524 demonstration board main components

Table 2. OM13524 demo board main components

Device	Description	LED	Location
PCA9745B	16-channel SPI-bus 57 mA / 20V constant current LED driver	-	U1 (See Fig 5)
PRTR5V0U2AX	ESD protection diode	-	U2
LW-E67C	White LED	4 white LEDs	WHT_LED[1:4]
LRTB_G6SG	RGB LED	4 RGB LEDs	RGB_LED[1:4]
LTST-C170GKT	Green LED for PCA9745B power supply either 3.3 V or 5 V indicator	1 green LED	D1

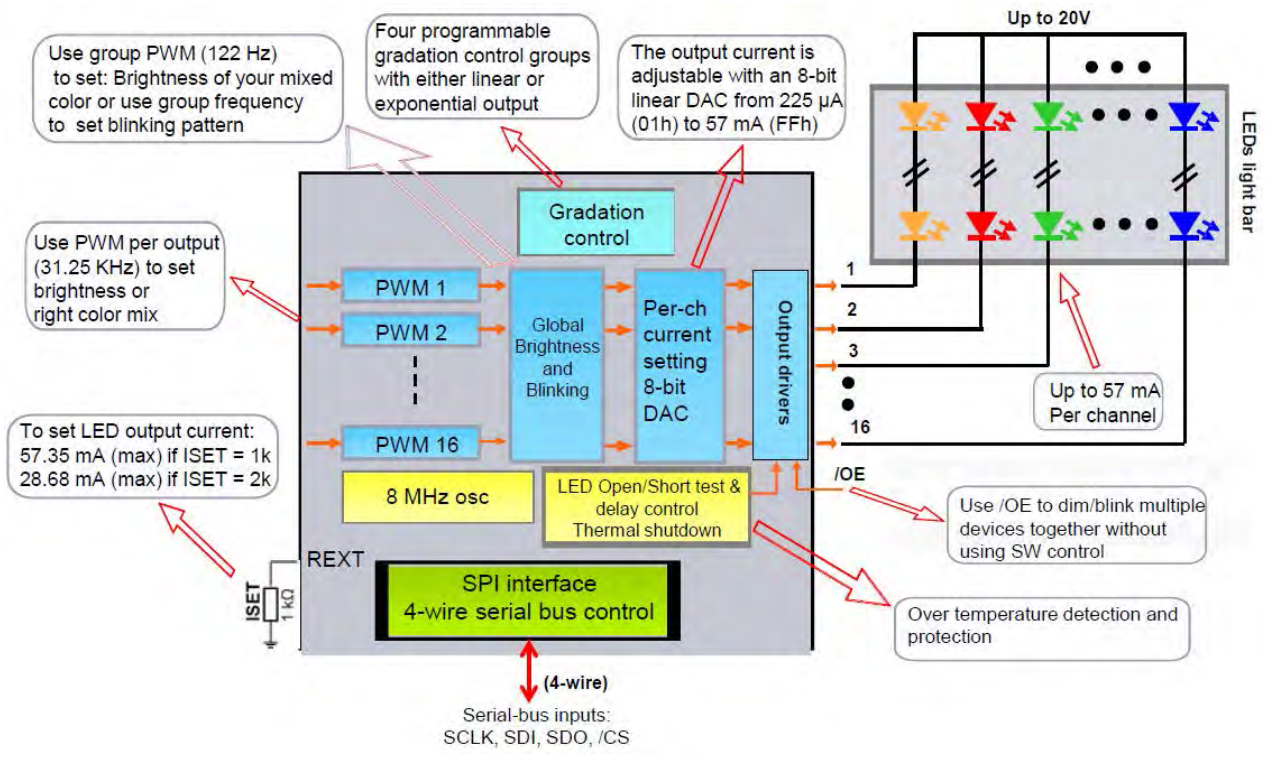

Fig 5. PCA9745B SPI Daisy-Chain LED driver block diagram

All information provided in this document is subject to legal disclaimers.

© NXP Semiconductors N.V. 2016. All rights reserved.

8. PCA9745B evaluation steps with WIN-I2CUSB board

The PCA9745B is controlled by WIN-SPIUSB GUI in Expert mode as shown in Fig 6.

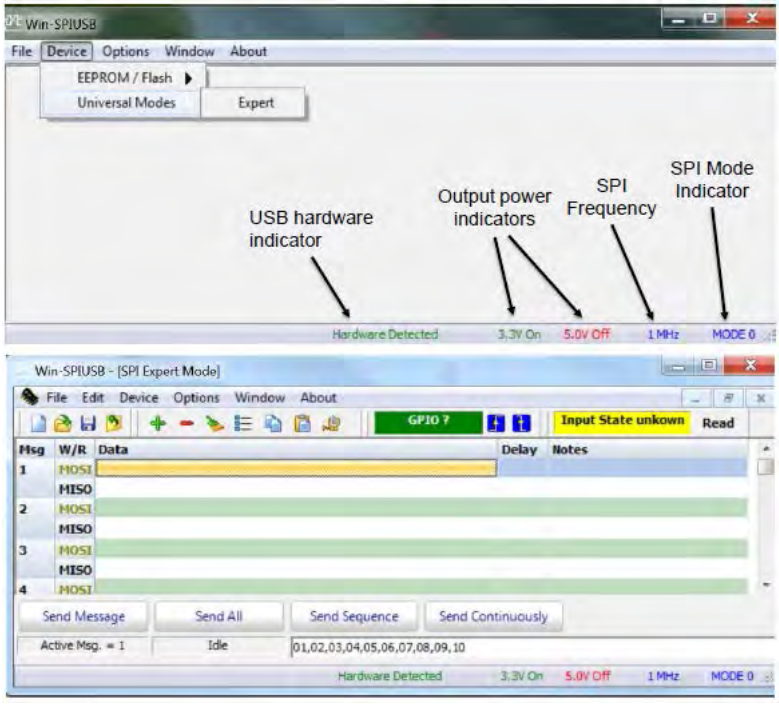

Fig 6. Drop-down menu selection for SPI expert mode

Connect the hardware as described in Section 4.3. All jumpers are in default setting for PCA9745B demo board. When you have correctly installed the software and the demonstration board hardware is connected and recognized by the computer, start the Win-SPIUSB software. As shown in the Fig 6, when the demonstration board hardware is correctly connected to the USB port and the computer recognizes it, the message “Hardware Detected” is displayed on the bottom of the window.

Switched 3.3 V and 5.0 V output power supplies are controlled through the “Options” menu or by double clicking on the 3.3 V or 5.0 V symbols on the bottom of the window. Power supplies are disabled by default and you must enable them before using the SPI-bus device on the board. SPI Frequency and Mode are controlled through the “Options” menu or by double clicking on the frequency or mode symbol on the bottom of the window.

8.1 PCA9745B blinking demo for all White and RGB LEDs

1. From the ‘Device’ drop-down menus select ‘Universal Modes’, and from the subsequent drop-down menu select ‘Expert Mode’ as shown in Fig 6.
2. Copy the “PCA9745B WHT_RGB LEDs blinking demo” text file as shown below. From the ‘File’ drop-down menus select ‘Open’, and from the “open data file” window to select this text file.

All information provided in this document is subject to legal disclaimers.

© NXP Semiconductors N.V. 2016. All rights reserved.

```
SPI Data File 2
0,04,55,Comments: set LEDOUT0 = 55h, turn on LEDs
,02,00
0,06,55,Comments: set LEDOUT1 = 55h, turn on LEDs
,04,55
0,08,55,Comments: set LEDOUT2 = 55h, turn on LEDs
,06,55
0,0A,55,Comments: set LEDOUT3 = 55h, turn on LEDs
,08,55
2000,82,80,Comments: write IREFALL = 80h
0,0A,55
0,82,00,Comments: write IREFALL = 00h
0,02,80
1500,82,40,Comments: write IREFALL = 80h
0,02,00
0,82,00,Comments: write IREFALL = 00h
0,02,40
1000,82,20,Comments: write IREFALL = 80h
0,02,00
0,82,00,Comments: write IREFALL = 00h
0,02,20
500,82,10,Comments: write IREFALL = 80h
0,02,00
0,02,21,Comments: set group control = blinking
0,02,10
0,04,FF,Comments: set LEDOUT0 = FFh
0,02,21
0,06,FF,Comments: set LEDOUT1 = FFh
,04,FF
0,08,FF,Comments: set LEDOUT2 = FFh
,06,FF
0,0A,FF,Comments: set LEDOUT3 = FFh
,08,FF
0,80,C0,Comments: set PWMALL=C0h
0,0A,FF
0,0C,40,Comments: set GRPPWM=40
0,00,C0
```


All information provided in this document is subject to legal disclaimers.

© NXP Semiconductors N.V. 2016. All rights reserved.

```
2000,0E,00,Comments: set GRPFREQ=00
0,0C,40
0,0C,80,Comments: set GRPPWM=80
0,0E,00
2000,0E,01,Comments: set GRPFREQ=01
0,0C,80
0,0C,A0,Comments: set GRPPWM=A0
0,0E,01
2000,0E,02,Comments: set GRPFREQ=02
0,0C,A0
0,0C,C0,Comments: set GRPPWM=C0
0,0E,02
2000,0E,03,Comments: set GRPFREQ=03
0,0C,C0
0,82,00,Comments: write IREFALL = 00h
0,0E,03
Sequence:01,02,03,04,05,06,07,08,09,10,11,12,13,14,15,16,17,18,19,20,21,22,23,24,25,26
```

3. After open the “PCA9745B WHT_RGB LEDs blinking demo” text file, the WIN-I2CUSB GUI in Expert mode screen will be displayed as shown in Fig 7.
4. Click the ‘Send All’ button, all the valid messages on the screen will be sent in the order of the row number (Msg #). The action will be performed one time.
5. User can program the MOSI (Master Out Slave In) Data to PCA9745B, the first 7-bit is to access the address of register and 8th bit to indicate Read (1) or Write (0), the next byte is data to read or write.

All information provided in this document is subject to legal disclaimers.

© NXP Semiconductors N.V. 2016. All rights reserved.

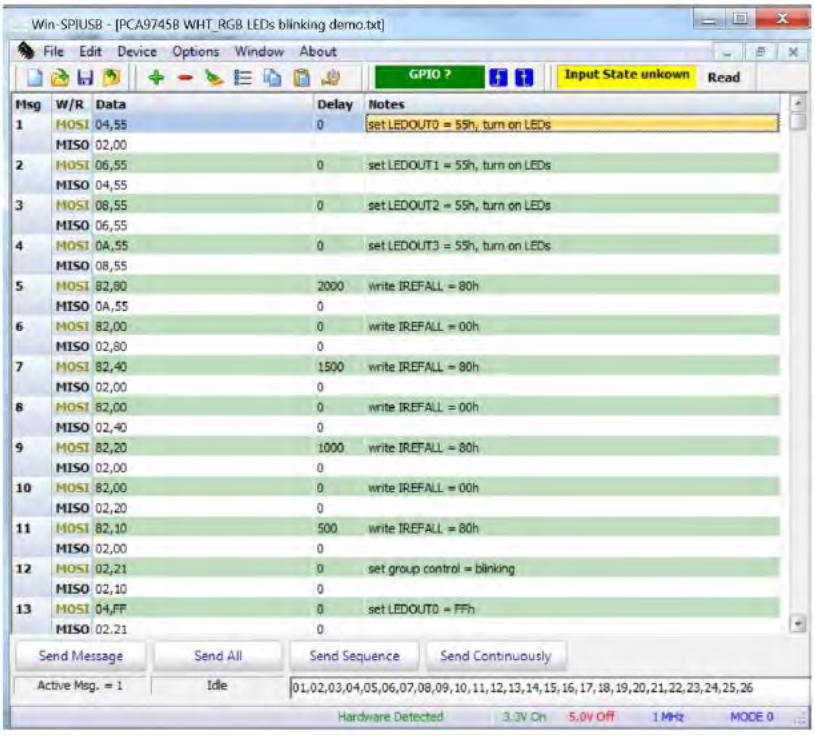

Fig 7. Message data in Expert mode to demo all White and RGB LEDs for blinking

All information provided in this document is subject to legal disclaimers.

© NXP Semiconductors N.V. 2016. All rights reserved.

9. PCA9745B evaluation steps with Fm+ development board

The PCA9745B is controlled by Fm+ development board GUI in Expert mode as shown in Fig 8.

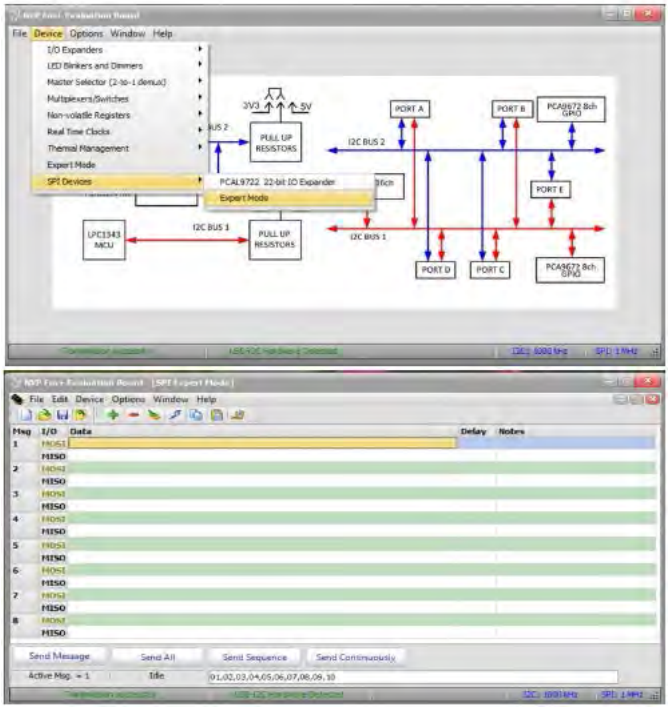

Fig 8. Selecting Expert Mode from Fm+ development board GUI

Connect the hardware as described in Section 4.2. All jumpers are in default setting for PCA9745B demo board. When you have correctly installed the software and the demonstration board hardware is connected and recognized by the computer, start the Fm+ development board software. As shown in Fig 8, when the demonstration board hardware is correctly connected to the USB port and the computer recognizes it, the message “USB-I2C Hardware Detected” is displayed on the bottom of the window. SPI Frequency is controlled through the “Options” menu or by clicking on the frequency symbol on the bottom of the window.

9.1 PCA9745B gradation demo for White and Red LEDs

1. From the ‘Device’ drop-down menus select ‘Expert Modes’ as shown in Fig 8.
2. Copy the “PCA9745B gradation demo in continuous mode“ text file as shown below. From the ‘File’ drop-down menus select ‘Open’, and from the “open data file” window to select this text file.

SPI Data File 2

0,04,05,Comments: LEDOUT0 turn on WHT_RED LEDs

,02,00

All information provided in this document is subject to legal disclaimers.

© NXP Semiconductors N.V. 2016. All rights reserved.

```
0,06,05,Comments: LEDOUT1
,04,05
0,08,05,Comments: LEDOUT2
,06,05
0,0A,05,Comments: LEDOUT3
,08,05
0,02,05,Comments: set Exponential adjust for gradation
,0A,05
0,50,C3,Comments: set RAMP_RATE_GRP0
,02,05
0,52,47,Comments: set STEP_TIME_GRP0
,50,C3
0,54,D2,Comments: set HOLD_CNTL_GRP0
,52,47
0,56,80,Comments: set IREF_GRP0
,54,D2
0,58,C3,Comments: set RAMP_RATE_GRP1
,56,80
0,5A,47,Comments: set STEP_TIME_GRP1
,58,C3
0,5C,D2,Comments: set HOLD_CNTL_GRP1
,5A,47
0,5E,80,Comments: set IREF_GRP1
,5C,D2
0,70,33,Comments: set GRAD_MODE_SEL0
,5E,80
0,72,33,Comments: set GRAD_MODE_SEL1
,70,33
0,74,E4,Comments: set GRAD_GRP_SEL0
,72,33
0,76,E4,Comments: set GRAD_GRP_SEL1
,74,E4
0,78,E4,Comments: set GRAD_GRP_SEL2
,76,E4
0,7A,E4,Comments: set GRAD_GRP_SEL3
,78,E4
0,82,01,Comments: must set IREFALL = 01 during gradation
,7A,E4
2000,7C,0F,Comments: set GRAD_CNTL
```


All information provided in this document is subject to legal disclaimers.

© NXP Semiconductors N.V. 2016. All rights reserved.

,02,01

Sequence:01,02,03,04,05,06,07,08,09,10,11,12,13,14,15,16,17,18,19,20,21

3. After open the “PCA9745B gradation demo in continuous mode” text file, the “NXP Fm+ Board GUI” in Expert mode screen will be displayed as shown in Fig 9.
4. Click the ‘Send All’ button, all the valid messages on the screen will be sent in the order of the row number (Msg #). The action will be performed one time.
5. User can program the MOSI (Master Out Slave In) Data to PCA9745B, the first 7-bit is to access the address of register and 8th bit to indicate Read (1) or Write (0), the next byte is data to read or write.

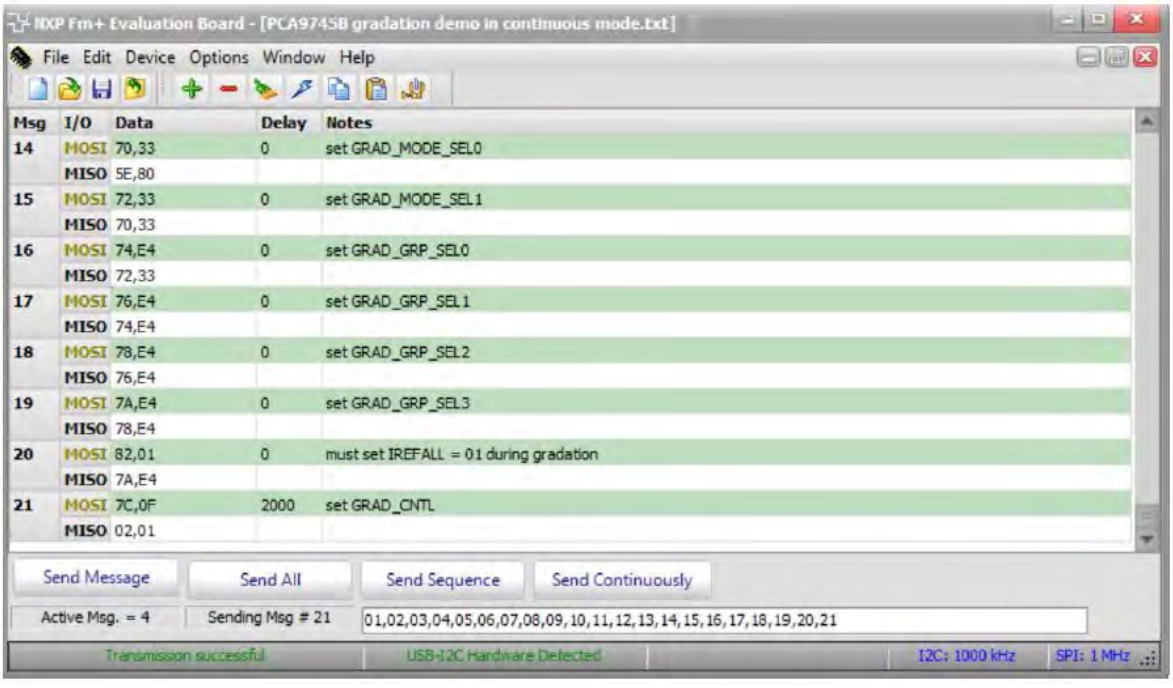

Fig 9. Message data in Expert mode to demo all white and red LEDs for gradation

9.2 Two PCA9745B demo boards in daisy-chain connection

1. From the ‘Device’ drop-down menus select ‘Expert Modes’ as shown in Fig 8.
2. Copy the “SPI daisy chain demo with two PCA9745B devices“ text file as shown below. From the ‘File’ drop-down menus select ‘Open’, and from the “open data file” window to select this text file.

SPI Data File 2

0,80,80,80,80,Comments: set PWMALL=80h

,00,80,00,80

900,82,20,82,10,Comments: set IREFALL=20h, 10h

,02,20,02,10

All information provided in this document is subject to legal disclaimers.

© NXP Semiconductors N.V. 2016. All rights reserved.

900,82,00,82,00,Comments: set IREFALL=00

,02,00,02,00

0,04,55,04,01,Comments: set LEDOUT0 (02h->04h due to bit0=0 is write bit) = 55h 1st device; 01h for 2nd device white LEDs ON;

0,02,00,02,00

0,06,55,06,01,Comments: set 2nd device 55h & 1st device 01h for LEDOUT1

0,06,55,06,01

0,08,55,08,01,Comments: set LEDOUT2 = 55h & 01h

0,08,55,08,01

0,0A,55,0A,01,Comments: set LEDOUT3 = 55h & 01h

0,08,55,08,01

800,82,10,82,40,Comments: write IREFALL = 10h & 40h

0,0A,55,0A,01

800,04,01,04,40,Comments: set LEDs on

0,04,01,04,40

800,06,01,06,40,Comments: set LEDs ON

0,04,01,04,40

800,08,01,08,40,Comments: set LEDs on

0,0A,01,0A,40

800,0A,01,0A,40,Comments: set LEDs on

0,04,04,04,10

600,04,04,04,10,Comments: set LEDs on

,06,04,06,10

600,06,04,06,10,Comments: set LEDs on

,08,04,08,10

600,08,04,08,10,Comments: set LEDs on

0,04,10,04,04

600,0A,04,0A,10,Comments: set LEDs on

0,08,04,08,10

500,04,10,04,04,Comments: set LEDs on

0,04,04,04,10

500,06,10,06,04,Comments: set LEDs ON

0,04,10,04,04

500,08,10,08,04,Comments: set LEDs on

0,06,10,06,04

500,0A,10,0A,04,Comments: set LEDs on

0,08,10,08,04

800,82,00,82,00,Comments: write IREFALL = 00

0,0A,10,0A,04

All information provided in this document is subject to legal disclaimers.

© NXP Semiconductors N.V. 2016. All rights reserved.

800,02,05,82,80,Comments: write IREFALL = 80h & set exp. gradation adjust for 2nd device

0,02,00,02,00

0,04,01,82,00,Comments: write IREFALL = 00h, set LDR=01 for 2nd device

0,02,05,02,80

0,06,01,04,40,Comments: set LEDOUT0 = 40h for blue LEDs ON, set LDR=01 for 2nd device

0,04,01,02,00

0,08,01,06,40,Comments: set LEDOUT1 = 40h, set LDR=01 for 2nd device

0,06,01,04,40

0,0A,01,08,40,Comments: set LEDOUT2 = 40h, set LDR=01 for 2nd device

0,08,01,06,40

0,50,C3,0A,40,Comments: set LEDOUT3 = 40h, set RAMP_RATE_GRP0=c3h

0,0A,01,08,40

800,52,47,82,80,Comments: write IREFALL = 80h, set STEP_TIME_GRP0=47h

0,50,C3,0A,40

0,54,D0,82,00,Comments: write IREFALL = 00h, set HOLD_CNTL_GRP0=D0h

0,52,47,02,80

0,56,F0,04,05,Comments: set LEDOUT0 = 05h turn on W_R_G_B LEDs, set IREF_GRP0=F0h

0,54,D0,02,00

0,70,11,06,10,Comments: set LEDOUT1 = 10h, set GRAD_MODE_SEL0=11h

0,56,F0,04,05

0,72,11,08,40,Comments: set LEDOUT2 = 40h, set GRAD_MODE_SEL1=11h

0,70,11,06,10

0,74,E4,0A,00,Comments: set LEDOUT3 = 00h, set GRAD_GRP_SEL0=E4h

0,72,11,08,40

800,76,E4,82,20,Comments: write IREFALL = 20h, set GRAD_GRP_SEL1=E4h

0,74,E4,0A,00

0,78,E4,82,00,Comments: write IREFALL = 00h, set GRAD_GRP_SEL2=E4h

0,76,E4,02,20

0,7A,E4,04,00,Comments: set LEDOUT0 = 00h, set GRAD_GRP_SEL3=E4h

0,78,E4,02,00

1,7C,03,06,05,Comments: set LEDOUT1 = 05h, set GRAD_CNTL=03h

0,7A,E4,04,00

4000,82,01,08,10,Comments: set LEDOUT2 = 10h, set IREFALL not 0 to enable gradation operation

0,7C,03,06,05

0,74,00,0A,40,Comments: set LEDOUT3 = 40h, set GRAD_GRP_SEL0=00h

0,02,01,08,10

800,76,00,82,1F,Comments: write IREFALL = 1Fh, set GRAD_GRP_SEL1=00h

0,74,00,0A,40

0,78,00,82,00,Comments: write IREFALL = 00h,set GRAD_GRP_SEL2=00h

All information provided in this document is subject to legal disclaimers.

© NXP Semiconductors N.V. 2016. All rights reserved.

```
0,76,00,02,1F
0,7A,00,04,40,Comments: set LEDOUT0 = 40h,set GRAD_GRP_SEL2=00h
0,78,00,02,00
0,04,05,06,00,Comments: set LEDOUT1 = 00h, LEDOUT0=05h
0,7A,00,04,40
0,06,05,08,05,Comments: set LEDOUT2 = 05h, LEDOUT1=05h
0,04,05,06,00
0,08,05,0A,10,Comments: set LEDOUT3 = 10h,LEDOUT2=05h
0,06,05,08,05
4000,0A,05,82,0F,Comments: write IREFALL = 0Fh,LEDOUT3=05h
0,08,05,0A,10
0,70,FF,82,00,Comments: write IREFALL = 00h,set GRAD_MODE_SEL0=FFh
0,0A,05,02,0F
0,72,FF,04,10,Comments: set LEDOUT0 = 10h,set GRAD_MODE_SEL1=FFh
0,70,FF,02,00
0,04,50,06,40,Comments: set LEDOUT1 = 40h,LEDOUT0=50h
0,72,FF,04,10
0,06,50,08,00,Comments: set LEDOUT2 = 00h,LEDOUT1=50h
0,04,50,06,40
0,08,50,0A,05,Comments: set LEDOUT3 = 05h,LEDOUT2=50h
0,06,50,08,00
4000,0A,50,82,07,Comments: write IREFALL = 07h,LEDOUT3=50h
0,08,50,0A,05
0,04,55,02,21,Comments: set group control = blinking,LEDOUT0=55h
0,0A,50,02,07
0,06,55,04,FF,Comments: set LEDOUT0 = FFh,LEDOUT1=55h
0,04,55,02,21
0,08,55,06,FF,Comments: set LEDOUT1 = FFh,LEDOUT2=55h
0,06,55,04,FF
0,0A,55,08,FF,Comments: set LEDOUT2 = FFh,LEDOUT3=55h
0,08,55,06,FF
0,05,FF,0A,FF,Comments: set LEDOUT3 = FFh, read LEDOUT0 register from 2nd device
0,0A,55,08,FF
400,07,FF,80,C0,Comments: set PWMALL=C0h, read LEDOUT1 from 2nd device
0,00,55,0A,FF
500,09,FF,0C,40,Comments: set GRPPWM=40, read LEDOUT2 from 2nd device
0,00,55,00,C0
5000,0B,FF,0E,00,Comments: set GRPFREQ=00, read LEDOUT3 from 2nd device
0,00,55,0C,40
```


All information provided in this document is subject to legal disclaimers.

© NXP Semiconductors N.V. 2016. All rights reserved.

800,FF,FF,0C,80,Comments: set GRPPWM=80, NOP for 2nd device

0,00,55,0E,00

5000,FF,FF,0E,01,Comments: set GRPFREQ=01, NOP for 2nd device

0,00,00,0C,80

1,82,00,82,00,Comments: set IREFALL=00

0,00,00,0E,01

Sequence:01,02,03,04,05,06,07,08,09,10,11,12,13,14,15,16,17,18,19,20,21,22,23,24,25,26,27,28,29,30,31,32,33,34,35,36,37,38

3. The Fm+ development board as SPI master drives two PCA9745B demo boards in daisy-chain as shown in the Fig 10. After open the “SPI daisy chain demo with two PCA9745B devices” text file, the “NXP Fm+ Board GUI” in Expert mode screen will be displayed all messages, then click the ‘Send All’ button, all the valid messages on the screen will be sent in the order of the row number (Msg #). The action will be performed one time.

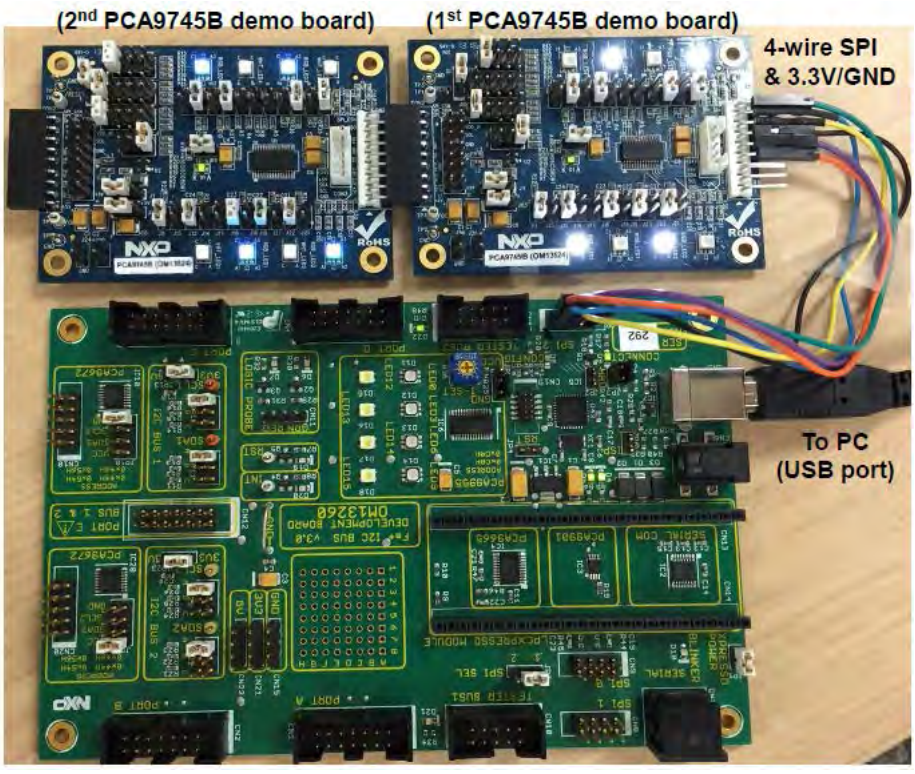

Fig 10. Two PCA9745B demo boards connecting to the Fm+ development board

All information provided in this document is subject to legal disclaimers.

© NXP Semiconductors N.V. 2016. All rights reserved.

10. Support

For support, please send an email to: i2c.support@nxp.com

11. Abbreviations

Table 2. Abbreviations

Acronym	Description
ESD	Electro Static Discharge
GUI	Graphical User Interface
I^2C-bus	Inter-integrated Circuit bus
IC	Integrated Circuit
LED	Light Emitting Diode
MISO	Master In, Slave Out
MOSI	Master Out, Slave In
PC	Personal Computer
PWM	Pulse Width Modulator
RAM	Random Access Memory
RGB	Red/Green/Blue
RGBA	Red/Green/Blue/Amber
SPI	Serial Peripheral Interface
USB	Universal Serial Bus

12. References

[1] **PCA9745B, 16-channel Fm+ I^2C-bus 57 mA / 20V constant current LED driver**
Product data sheet; NXP Semiconductors:
http://www.nxp.com/documents/data_sheet/PCA9745B.pdf

All information provided in this document is subject to legal disclaimers.

© NXP Semiconductors N.V. 2016. All rights reserved.

13. Legal information

13.1 Definitions

Draft — The document is a draft version only. The content is still under internal review and subject to formal approval, which may result in modifications or additions. NXP Semiconductors does not give any representations or warranties as to the accuracy or completeness of information included herein and shall have no liability for the consequences of use of such information.

13.2 Disclaimers

Limited warranty and liability — Information in this document is believed to be accurate and reliable. However, NXP Semiconductors does not give any representations or warranties, expressed or implied, as to the accuracy or completeness of such information and shall have no liability for the consequences of use of such information. NXP Semiconductors takes no responsibility for the content in this document if provided by an information source outside of NXP Semiconductors.

In no event shall NXP Semiconductors be liable for any indirect, incidental, punitive, special or consequential damages (including - without limitation - lost profits, lost savings, business interruption, costs related to the removal or replacement of any products or rework charges) whether or not such damages are based on tort (including negligence), warranty, breach of contract or any other legal theory.

Notwithstanding any damages that customer might incur for any reason whatsoever, NXP Semiconductors' aggregate and cumulative liability towards customer for the products described herein shall be limited in accordance with the *Terms and conditions of commercial sale* of NXP Semiconductors.

Right to make changes — NXP Semiconductors reserves the right to make changes to information published in this document, including without limitation specifications and product descriptions, at any time and without notice. This document supersedes and replaces all information supplied prior to the publication hereof.

Suitability for use — NXP Semiconductors products are not designed, authorized or warranted to be suitable for use in life support, life-critical or safety-critical systems or equipment, nor in applications where failure or malfunction of an NXP Semiconductors product can reasonably be expected to result in personal injury, death or severe property or environmental damage. NXP Semiconductors and its suppliers accept no liability for inclusion and/or use of NXP Semiconductors products in such equipment or applications and therefore such inclusion and/or use is at the customer's own risk.

Applications — Applications that are described herein for any of these products are for illustrative purposes only. NXP Semiconductors makes no representation or warranty that such applications will be suitable for the specified use without further testing or modification.

Customers are responsible for the design and operation of their applications and products using NXP Semiconductors products, and NXP Semiconductors accepts no liability for any assistance with applications or customer product design. It is customer's sole responsibility to determine whether the NXP Semiconductors product is suitable and fit for the customer's applications and products planned, as well as for the planned application and use of customer's third party customer(s). Customers should provide appropriate design and operating safeguards to minimize the risks associated with their applications and products.

NXP Semiconductors does not accept any liability related to any default, damage, costs or problem which is based on any weakness or default in the customer's applications or products, or the application or use by customer's third party customer(s). Customer is responsible for doing all necessary testing for the customer's applications and products using NXP Semiconductors products in order to avoid a default of the applications and the products or of the application or use by customer's third party customer(s). NXP does not accept any liability in this respect.

Export control — This document as well as the item(s) described herein may be subject to export control regulations. Export might require a prior authorization from competent authorities.

Translations — A non-English (translated) version of a document is for reference only. The English version shall prevail in case of any discrepancy between the translated and English versions.

Evaluation products — This product is provided on an "as is" and "with all faults" basis for evaluation purposes only. NXP Semiconductors, its affiliates and their suppliers expressly disclaim all warranties, whether express, implied or statutory, including but not limited to the implied warranties of non-infringement, merchantability and fitness for a particular purpose. The entire risk as to the quality, or arising out of the use or performance, of this product remains with customer.

In no event shall NXP Semiconductors, its affiliates or their suppliers be liable to customer for any special, indirect, consequential, punitive or incidental damages (including without limitation damages for loss of business, business interruption, loss of use, loss of data or information, and the like) arising out the use of or inability to use the product, whether or not based on tort (including negligence), strict liability, breach of contract, breach of warranty or any other theory, even if advised of the possibility of such damages.

Notwithstanding any damages that customer might incur for any reason whatsoever (including without limitation, all damages referenced above and all direct or general damages), the entire liability of NXP Semiconductors, its affiliates and their suppliers and customer's exclusive remedy for all of the foregoing shall be limited to actual damages incurred by customer based on reasonable reliance up to the greater of the amount actually paid by customer for the product or five dollars (US$5.00). The foregoing limitations, exclusions and disclaimers shall apply to the maximum extent permitted by applicable law, even if any remedy fails of its essential purpose.

13.3 Trademarks

Notice: All referenced brands, product names, service names and trademarks are property of their respective owners.

All information provided in this document is subject to legal disclaimers.

© NXP Semiconductors N.V. 2016. All rights reserved.

14. List of figures

Fig 1. PCA9745B demo board (OM13524) connecting to the Fm+ development board (OM13260) 5
Fig 2. PCA9745B demo board (OM13524) connecting to the WIN-I2CUSB board 6
Fig 3. PCA9745B demo board (OM13524) 7
Fig 4. PCA9745B demo board schematic 11
Fig 5. PCA9745B SPI Daisy-Chain LED driver block diagram 12
Fig 6. Drop-down menu selection for SPI expert mode 13
Fig 7. Message data in Expert mode to demo all White and RGB LEDs for blinking 16
Fig 8. Selecting Expert Mode from Fm+ development board GUI 17
Fig 9. Message data in Expert mode to demo all white and red LEDs for gradation 19
Fig 10. Two PCA9745B demo boards connecting to the Fm+ development board 23

All information provided in this document is subject to legal disclaimers.

© NXP Semiconductors N.V. 2016. All rights reserved.

15. List of tables

Table 1. Jumper settings for test and evaluation 8
Table 2. OM13524 demo board main components.....12

All information provided in this document is subject to legal disclaimers.

© NXP Semiconductors N.V. 2016. All rights reserved.

16. Contents

1. Introduction 3
2. Features 3
3. Getting started 3
3.1 Assumptions 3
3.2 Static handling requirements 3
3.3 Minimum system requirements 3
3.4 Power requirements 3
4. Installation 4
4.1 Fm+ development board and WIN-SPIUSB software 4
4.2 OM13524 connection to Fm+ I2C bus development board 4
4.3 OM13524 connection to WIN-I2CUSB hardware adapter board 5
5. Hardware description 8
6. Schematic 11
7. OM13524 demonstration board main components 12
8. PCA9745B evaluation steps with WIN-I2CUSB board 13
8.1 PCA9745B blinking demo for all White and RGB LEDs 13
9. PCA9745B evaluation steps with Fm+ development board 17
9.1 PCA9745B gradation demo for White and Red LEDs 17
9.2 Two PCA9745B demo boards in daisy-chain connection 19
10. Support 24
11. Abbreviations 24
12. References 24
13. Legal information 25
13.1 Definitions 25
13.2 Disclaimers 25
13.3 Trademarks 25
14. List of figures 26
15. List of tables 27
16. Contents 28

Please be aware that important notices concerning this document and the product(s) described herein, have been included in the section 'Legal information'.

© NXP Semiconductors N.V. 2016. **All rights reserved.**

For more information, please visit: http://www.nxp.com

Date of release: 23 June 2016
Document identifier: UM11009

Общество с ограниченной ответственностью «МосЧип» ИНН 7719860671 / КПП 771901001
Адрес: 105318, г.Москва, ул.Щербаковская д.3, офис 1107

Данный компонент на территории Российской Федерации

Вы можете приобрести в компании MosChip.

Для оперативного оформления запроса Вам необходимо перейти по данной ссылке:

http://moschip.ru/get-element

Вы можете разместить у нас заказ для любого Вашего проекта, будь то серийное производство или разработка единичного прибора.

В нашем ассортименте представлены ведущие мировые производители активных и пассивных электронных компонентов.

Нашей специализацией является поставка электронной компонентной базы двойного назначения, продукции таких производителей как XILINX, Intel (ex.ALTERA), Vicor, Microchip, Texas Instruments, Analog Devices, Mini-Circuits, Amphenol, Glenair.

Сотрудничество с глобальными дистрибьюторами электронных компонентов, предоставляет возможность заказывать и получать с международных складов практически любой перечень компонентов в оптимальные для Вас сроки.

На всех этапах разработки и производства наши партнеры могут получить квалифицированную поддержку опытных инженеров.

Система менеджмента качества компании отвечает требованиям в соответствии с ГОСТ Р ИСО 9001, ГОСТ РВ 0015-002 и ЭС РД 009

Офис по работе с юридическими лицами:

105318, г.Москва, ул.Щербаковская д.3, офис 1107, 1118, ДЦ «Щербаковский»

Телефон: +7 495 668-12-70 (многоканальный)

Факс: +7 495 668-12-70 (доб.304)

E-mail: info@moschip.ru

Skype отдела продаж:
moschip.ru
moschip.ru_4
moschip.ru_6
moschip.ru_9