LT3519/LT3519-1/LT3519-2

LED Driver with Integrated Schottky Diode

FEATURES

- **Up to 3000:1 True Color PWM™ Dimming**
- **Wide Input Voltage Range**
  - **Operation from 3V to 30V**
  - **Transient Protection to 40V**
- **Rail-to-Rail LED Current Sense from 0V to 45V**
- **45V, 750mA Internal Switch**
- **Internal Schottky Diode**
- Constant-Current and Constant-Voltage Regulation
- Boost, SEPIC, Buck-Boost Mode or Buck Mode Topology
- Open LED Protection and Open LED Status Pin
- Programmable Undervoltage Lockout with Hysteresis
- Fixed Frequency: 400kHz (LT3519), 1MHz (LT3519-1), 2.2MHz (LT3519-2)
- Internal Compensation
- CTRL Pin Provides Analog Dimming
- Low Shutdown Current: <1μA
- 16-Lead MSOP Package

APPLICATIONS

- Automotive
- Industrial
- Constant Current Source
- Current Limited Constant Voltage Source

DESCRIPTION

The LT®3519/LT3519-1/LT3519-2 are fixed frequency step-up DC/DC converters designed to drive LEDs. They feature an internal 45V, 750mA low side switch and Schottky diode. Combining a traditional voltage feedback and a unique rail-to-rail current sense feedback allows these converters to operate as a constant-voltage source or constant-current source. Internal compensation simplifies applications. These devices feature rail-to-rail LED current sense pins that provide the most flexibility in choosing a converter configuration to drive the LEDs. The LED current is externally programmable with a sense resistor. The external PWM provides up to 3000:1 PWM dimming and the CTRL input provides analog dimming.

, LT, LTC, LTM, Linear Technology and the Linear logo are registered trademarks of Linear Technology Corporation. True Color PWM is a trademark of Linear Technology Corporation. All other trademarks are the property of their respective owners.
Protected by U.S. Patents, including 7199560 and 7321203.

TYPICAL APPLICATION

4W Boost Automotive LED Driver

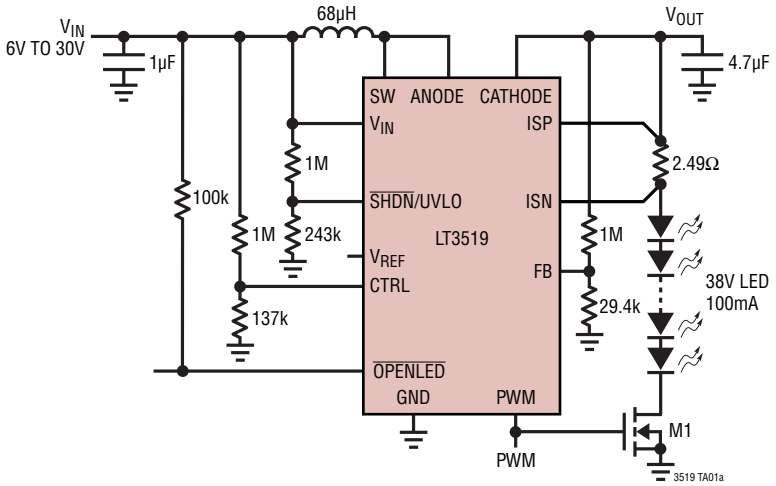

LED Current vs V_{IN}

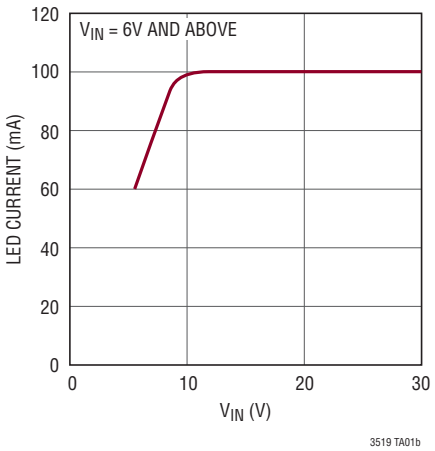

ABSOLUTE MAXIMUM RATINGS

(Note 1)

V_{IN}, $\overline{OPENLED}$ (Note 3) 40V
$\overline{SHDN}$/UVLO (Note 4) 40V
SW, ISP, ISN, ANODE, CATHODE 45V
PWM, CTRL 10V
FB, V_{REF} 3V
Operating Junction Temperature Range
(Note 2) ..... –40°C to 125°C
Maximum Junction Temperature ..... 125°C
Storage Temperature Range ..... –65°C to 125°C

PIN CONFIGURATION

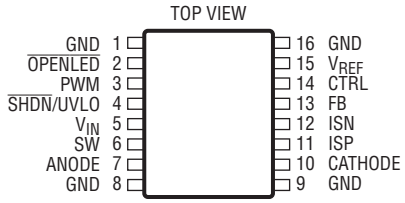

MS PACKAGE
16-LEAD PLASTIC MSOP

T_{JMAX} = 125°C, θ_{JA} = 130°C/W

ORDER INFORMATION

LEAD FREE FINISH	TAPE AND REEL	PART MARKING*	PACKAGE DESCRIPTION	TEMPERATURE RANGE
LT3519EMS#PBF	LT3519EMS#TRPBF	3519	16-Lead Plastic MSOP	–40°C to 125°C
LT3519EMS-1#PBF	LT3519EMS-1#TRPBF	35191	16-Lead Plastic MSOP	–40°C to 125°C
LT3519EMS-2#PBF	LT3519EMS-2#TRPBF	35192	16-Lead Plastic MSOP	–40°C to 125°C
LT3519IMS#PBF	LT3519IMS#TRPBF	3519	16-Lead Plastic MSOP	–40°C to 125°C
LT3519IMS-1#PBF	LT3519IMS-1#TRPBF	35191	16-Lead Plastic MSOP	–40°C to 125°C
LT3519IMS-2#PBF	LT3519IMS-2#TRPBF	35192	16-Lead Plastic MSOP	–40°C to 125°C

Consult LTC Marketing for parts specified with wider operating temperature ranges. *The temperature grade is identified by a label on the shipping container.
Consult LTC Marketing for information on non-standard lead based finish parts.

For more information on lead free part marking, go to: http://www.linear.com/leadfree/
For more information on tape and reel specifications, go to: http://www.linear.com/tapeandreel/

ELECTRICAL CHARACTERISTICS

The ● denotes the specifications which apply over the full operating temperature range, otherwise specifications are at T_A = 25°C. V_{IN} = 12V, $\overline{SHDN}$/UVLO = 12V, CTRL = 2V, PWM = 5V, unless otherwise noted.

PARAMETER	CONDITIONS		MIN	TYP	MAX	UNITS
V_{IN} Operating Voltage Range	Continuous Operation (Note 3)		3		30	V
V_{IN} Supply Current	$\overline{SHDN}$/UVLO = 0V (Shutdown) PWM = 0V (Idle) PWM > 1.5V, FB = 1.5V (Active, Not Switching)			0.1 2.0 2.5	1 3.0 3.5	µA mA mA
Current Sense Voltage (V_{ISP}-V_{ISN})	ISP = 24V ISP = 0V	●	240	250 250	260	mV mV
Zero Current Sense Voltage (V_{ISP}-V_{ISN})	ISP = 24V, CTRL = 100mV	●	–15	–6	3	mV
Current Sense Voltage Line Regulation	2.5V < ISP < 45V			0.02		%/V

ELECTRICAL CHARACTERISTICS

The ● denotes the specifications which apply over the full operating temperature range, otherwise specifications are at T_A = 25°C. V_{IN} = 12V, $\overline{SHDN}$/UVLO = 12V, CTRL = 2V, PWM = 5V, unless otherwise noted.

PARAMETER	CONDITIONS		MIN	TYP	MAX	UNITS
Switching Frequency	400kHz (LT3519) 1MHz (LT3519-1) 2.2MHz (LT3519-2)	● ● ●	320 0.80 1.9	400 1 2.2	440 1.10 2.4	kHz MHz MHz
Maximum Duty Cycle	400kHz (LT3519) 1MHz (LT3519-1) 2.2MHz (LT3519-2)	● ● ●	94 86 72	97 93 83		% % %
Switch Current Limit		●	750	980	1150	mA
Switch V_{CESAT}	I_{SW} = 500mA			300		mV
Switch Leakage Current	SW = 45V, PWM = 0V				2	µA
CTRL for Full-Scale LED Current			1.2			V
CTRL Pin Bias Current	Current Out of Pin, CTRL = 0.1V			50	100	nA
PWM Input High Voltage		●	1.5			V
PWM Input Low Voltage		●			0.8	V
PWM Pin Resistance to GND				70		kΩ
FB Regulation Voltage (V_{FB})		●	1.190	1.220	1.250	V
FB Pin Threshold Voltage for $\overline{OPENLED}$ Falling			V_{FB} – 70mV	V_{FB} – 60mV	V_{FB} – 50mV	V
FB Pin Bias Current	Current Out of Pin, FB = 1V			60	120	nA
ISP, ISN Idle Input Bias Current	PWM = 0V, ISP = ISN = 24V				1	µA
ISP, ISN Active Input Bias Current	ISP = ISN = 24V, Current per Pin			17		µA
Schottky Forward Drop	$I_{SCHOTTKY}$ = 500mA			0.8		V
Schottky Leakage Current	CATHODE = 24V, ANODE = 0V				4	µA
$\overline{SHDN}$/UVLO Threshold Voltage Falling		●	1.180	1.220	1.270	V
$\overline{SHDN}$/UVLO Input Low Voltage	I_{VIN} Drops Below 1µA				0.4	V
$\overline{SHDN}$/UVLO Pin Bias Current Low	$\overline{SHDN}$/UVLO = 1.15V		1.8	2.2	2.6	µA
$\overline{SHDN}$/UVLO Pin Bias Current High	$\overline{SHDN}$/UVLO = 1.30V			10	100	nA
V_{REF} Output Voltage	–100µA ≤ I_{VREF} ≤ 0µA	●	1.96	2	2.04	V
V_{REF} Output Pin Regulation	3V < V_{IN} < 40V				0.04	%/V
$\overline{OPENLED}$ Output Low (V_{OL})	$I_{\overline{OPENLED}}$ = 1mA				240	mV
$\overline{OPENLED}$ Leakage Current	FB = 0V, $\overline{OPENLED}$ = 40V				1	µA

Note 1: Stresses beyond those listed under Absolute Maximum Ratings may cause permanent damage to the device. Exposure to any Absolute Maximum Rating condition for extended periods may affect device reliability and lifetime.

Note 2. The LT3519E/LT3519E-1/LT3519E-2 are guaranteed to meet specified performance from 0°C to 125°C junction temperature range. Specifications over the –40°C to 125°C operating junction temperature range are assured by design, characterization and correlation with statistical process controls. The LT3519I/LT3519I-1/LT3519I-2 are guaranteed to meet performance specifications over the –40°C to 125°C operating junction temperature range.

Note 3. Absolute maximum voltage at V_{IN} and $\overline{OPENLED}$ is 40V for nonrepetitive one second transients and 30V for continuous operation.

Note 4. For V_{IN} below 6V, the $\overline{SHDN}$/UVLO pin must not exceed V_{IN} for proper operation.

TYPICAL PERFORMANCE CHARACTERISTICS (T_A = 25°C unless otherwise noted)

V_{ISP}-V_{ISN} Threshold vs V_{CTRL}

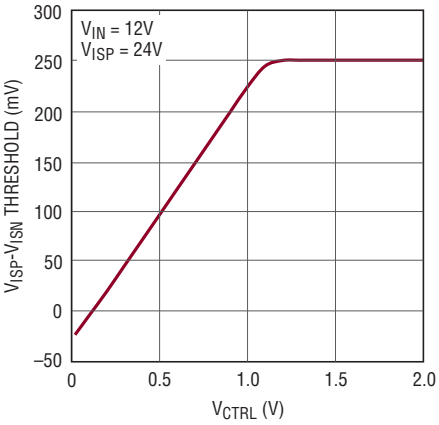

3519 G01

Switch Current Limit vs Duty Cycle

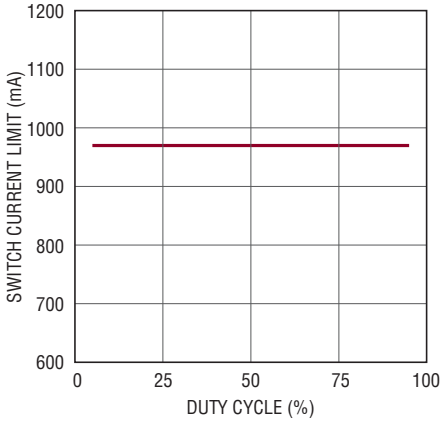

3519 G02

V_{REF} Voltage vs Temperature

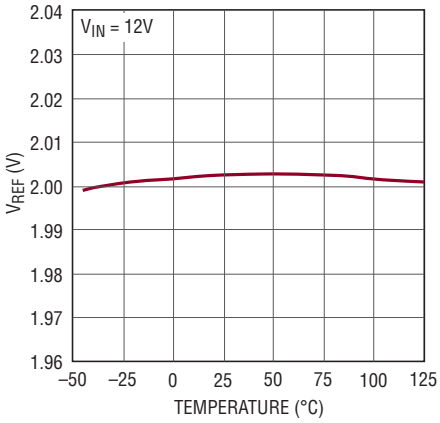

3519 G03

V_{ISP}-V_{ISN} Threshold vs Temperature

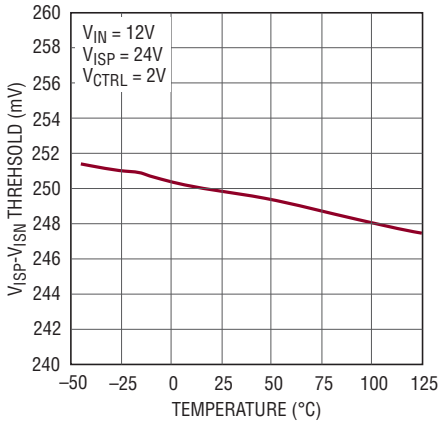

3519 G04

Switch Current Limit vs Temperature

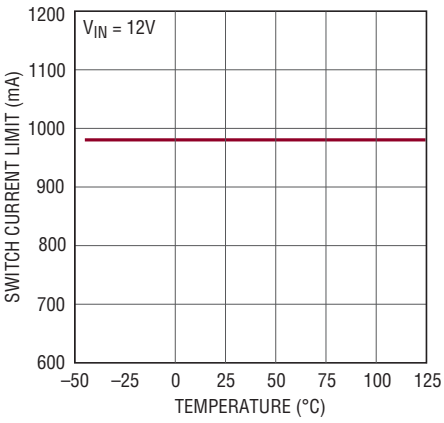

3519 G05

Oscillator Frequency vs Temperature (LT3519)

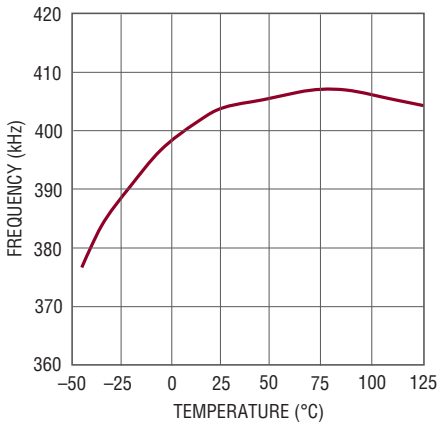

3519 G06

V_{ISP}-V_{ISN} Threshold vs V_{ISP}

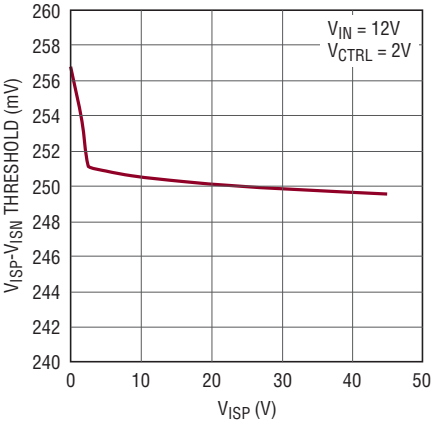

3519 G07

V_{REF} Voltage vs V_{IN}

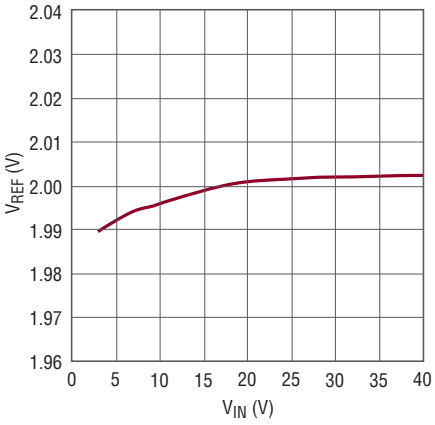

3519 G08

Quiescent Current vs V_{IN}

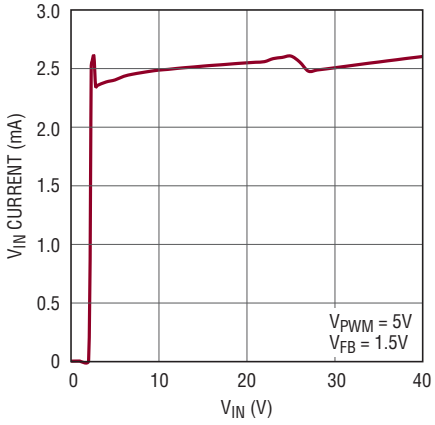

3519 G09

TYPICAL PERFORMANCE CHARACTERISTICS (T_A = 25°C unless otherwise noted)

FB Regulation Voltage vs Temperature

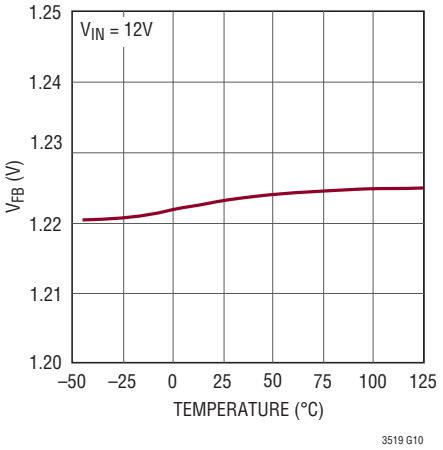

FB $\overline{\text{OPENLED}}$ Threshold vs Temperature

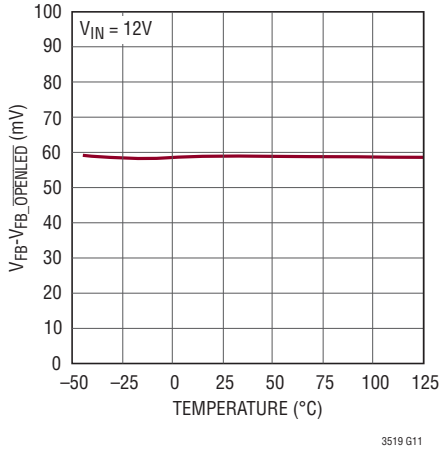

$\overline{\text{SHDN}}$/UVLO Threshold vs Temperature

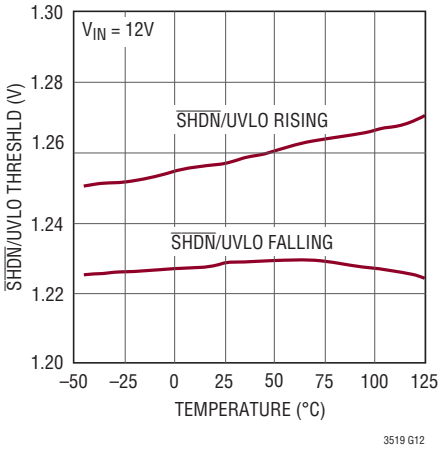

Switch Saturation Voltage (V_{CESAT})

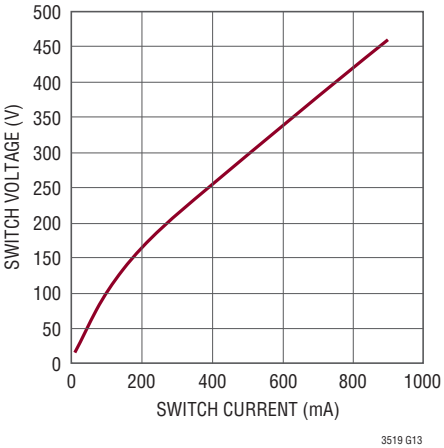

Schottky Leakage Current vs Temperature

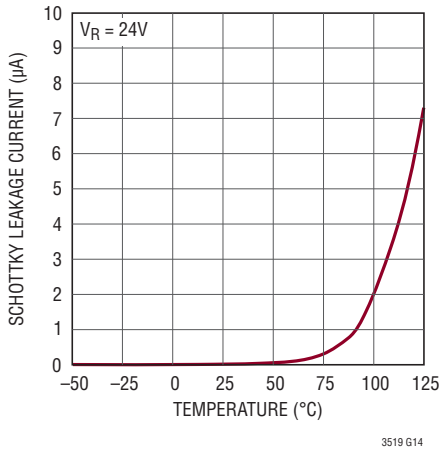

Schottky Forward Voltage Drop

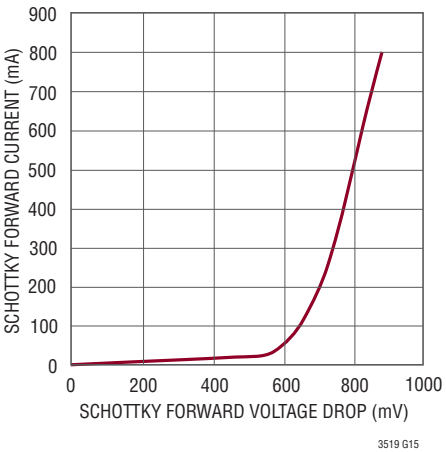

Oscillator Frequency vs Temperature (LT3519-1)

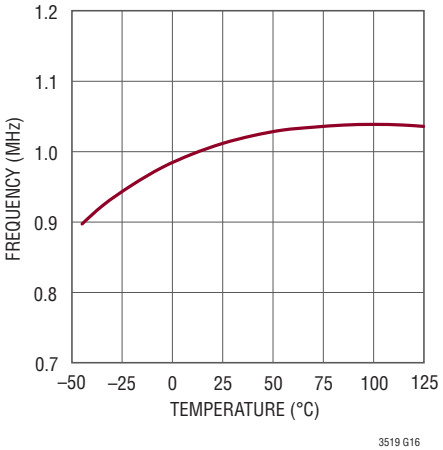

Oscillator Frequency vs Temperature (LT3519-2)

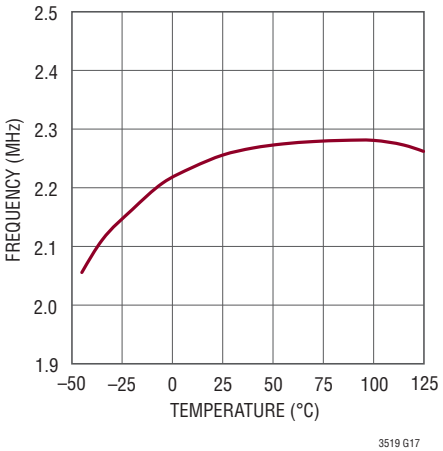

PIN FUNCTIONS

GND (Pins 1, 8, 9, 16): Power Ground and Signal Ground. Tie to GND plane for best thermal performance.

$\overline{\text{OPENLED}}$ (Pin 2): Open LED Status Pin. The $\overline{\text{OPENLED}}$ pin asserts if the FB input is greater than the FB regulation threshold minus 60mV (typical). The pin must have an external pull-up resistor to function. When the PWM input is low and the converter is idle, the $\overline{\text{OPENLED}}$ condition is latched to the last valid state when the PWM input was high. When the PWM input goes high again, the $\overline{\text{OPENLED}}$ pin will be updated. This pin may be used to report an open LED fault.

PWM (Pin 3): Pulse Width Modulated Input. A signal low disables the oscillator and turns off the main switch. PWM has an internal pull-down resistor. Tie PWM pin to V_{REF} if not used.

$\overline{\text{SHDN}}$/UVLO (Pin 4): Shutdown and Undervoltage Lockout Pin. An accurate 1.22V falling threshold with externally programmable hysteresis detects when power is okay to enable switching. Rising hysteresis is generated by the external resistor divider and an accurate internal 2.2µA pull-down current. Above the 1.25V (nominal) rising threshold (but below 6V), $\overline{\text{SHDN}}$/UVLO input bias current is sub-µA. Below the falling threshold, a 2.2µA pull-down current is enabled so the user can define the hysteresis with external resistor selection. Tie to 0.4V or less to disable device and reduce V_{IN} quiescent current below 1µA. Pin may be tied to V_{IN}, but do not tie it to a voltage higher than V_{IN} if V_{IN} is less than 6V.

V_{IN} (Pin 5): Input Supply Pin. This pin must be locally bypassed with a 1µF ceramic capacitor (or larger) placed close to it.

SW (Pin 6): Switch Pin. Connect the inductor at this pin. Minimize the trace at this pin to reduce EMI.

ANODE (Pin 7): Internal Schottky Anode Pin.

CATHODE (Pin 10): Internal Schottky Cathode Pin.

ISP (Pin 11): Current Sense Resistor Positive Pin. This input is the noninverting input of the internal current sense amplifier. Input bias current increases with $V_{ISP}–V_{ISN}$ increase.

ISN (Pin 12): Current Sense Resistor Negative Pin. This input is the inverting input of the internal current sense amplifier.

FB (Pin 13): Voltage Loop Feedback Pin. It is used to connect to output resistor divider for constant voltage regulation or open LED protection. The internal transconductance amplifier will regulate FB to 1.22V (nominal) through the DC/DC converter. If the FB input is regulating the loop, the $\overline{\text{OPENLED}}$ pull-down is asserted. This action may signal an open LED fault. Do not leave the FB pin open. If not used, connect to GND.

CTRL (Pin 14): Current Sense Threshold Voltage Adjustment Pin. This pin sets the threshold voltage across the sense resistor between ISP and ISN. Connect directly to the V_{REF} pin or a voltage above 1.2V for full-scale threshold of 250mV, or use a voltage between 0.1V and 1.0V to linearly adjust the threshold. A voltage between 1.0V and 1.2V transitions to the full-scale threshold. Tie CTRL pin to the V_{REF} pin if not used.

V_{REF} (Pin 15): Reference Output Pin. Typically 2V. This pin can supply up to 100µA.

BLOCK DIAGRAM

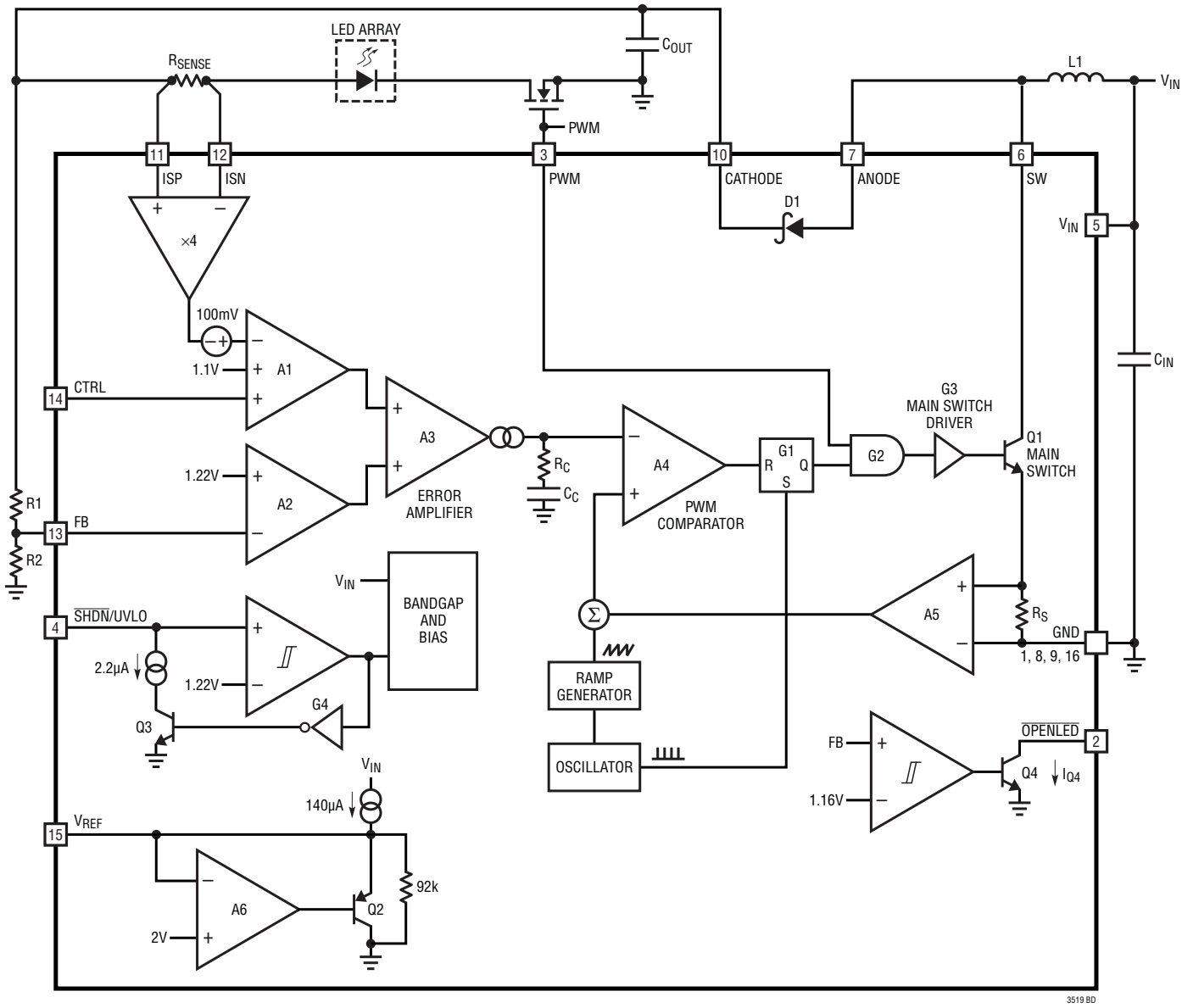

NOTE: THE MAXIMUM ALLOWED Q4 COLLECTOR CURRENT I_{Q4} IS 2mA.

OPERATION

The LT3519/LT3519-1/LT3519-2 are constant frequency, current mode regulators with an internal power switch and Schottky. Operation can be best understood by referring to the Block Diagram. At the start of each oscillator cycle, the SR latch is set, which turns on the Q1 power switch. A voltage proportional to the switch current is added to a stabilizing ramp and the resulting sum is fed into the positive terminal of the PWM comparator, A4. When this voltage exceeds the level at the negative input of A4, the SR latch is reset, turning off the power switch. The level at the negative input of A4 is set by the error amplifier A3. A3 has two inputs, one from the voltage feedback loop and the other one from the current loop. Whichever feedback input is lower takes precedence to set the V_C node voltage, and forces the converter into either a constant-current or a constant-voltage mode.

The LT3519/LT3519-1/LT3519-2 are designed to transition cleanly between these two modes of operation. The current sense amplifier senses the voltage across R_{SENSE} and provides an ×4 pre-gain to amplifier A1. The output of A1 is simply an amplified version of the difference between the voltage across R_{SENSE} and the lower of V_{CTRL} or 1.1V. In this manner, the error amplifier sets the correct peak switch current level to regulate the current through R_{SENSE}. If the error amplifier's output increases, more current is delivered to the output; if it decreases, less current is delivered. The current regulated in R_{SENSE} can be adjusted by changing the input voltage V_{CTRL}. The FB voltage loop is implemented by the amplifier A2. When the voltage loop dominates, the V_C node voltage is set by the amplified difference of the internal reference of 1.22V and the FB pin. If FB voltage is lower than the reference voltage, the switch current will increase; if FB voltage is higher than the reference voltage, the switch demand current will decrease. The LED current sense feedback interacts with the FB voltage feedback so that FB will not exceed the internal reference and the voltage between ISP and ISN will not exceed the threshold set by the CTRL pin. For accurate current or voltage regulation, it is necessary to be sure that under normal operating conditions the appropriate loop is dominant. To deactivate the voltage loop entirely, FB can be connected to GND. To deactivate the LED current loop entirely, the ISP and ISN should be tied together and the CTRL input tied to V_{REF}.

When the FB input exceeds a voltage about 60mV lower than the FB regulation voltage, the pull-down driver on the $\overline{\text{OPENLED}}$ pin is activated. This function provides a status indicator that the load may be disconnected and the constant-voltage feedback loop is taking control of the switching regulator.

Dimming of the LED array is accomplished by pulsing the current using the PWM pin. When the PWM pin is low, switching is disabled and the error amplifier is turned off so that it does not drive the V_C node. Also, all internal loads on the V_C node are disabled so that the charge state of the V_C node will be saved on the internal compensation capacitor. This feature reduces transient recovery time. When the PWM input again transitions high, the demand current for the switch returns to the value just before PWM last transitioned low. To further reduce transient recovery time, an external MOSFET should be used to disconnect the LED array current loop when PWM is low, stopping C_{OUT} from discharging.

APPLICATIONS INFORMATION

Dimming Control

There are two methods to control the current source for dimming using the LT3519/LT3519-1/LT3519-2. The first method, PWM Dimming, uses the PWM pin to modulate the current source between zero and full current to achieve a precisely programmed average current. To make this method of current control more accurate, the switch demand current is stored on the internal V_C node during the quiescent phase when PWM is low. This feature minimizes recovery time when the PWM signal goes high. To obtain best PWM dimming performance, it is necessary to use an external disconnect switch in the LED current path to prevent the output capacitor from discharging during the PWM signal low phase. For best product of analog and PWM dimming, the minimum PWM low or high time should be at least six switching cycles (3µs for f_{SW} = 2MHz). Maximum PWM period is determined by the system. The maximum PWM dimming ratio (PWM_{RATIO}) can be calculated from the maximum PWM period (t_{MAX}) and the minimum PWM pulse width (t_{MIN}) as follows:

$$PWM_{RATIO} = \frac{t_{MAX}}{t_{MIN}}$$

Example:

t_{MAX} = 9ms, t_{MIN} = 3µs (f_{SW} = 2MHz)

$$PWM_{RATIO} = \frac{9ms}{3\mu s} = 3000:1$$

The second method of dimming control, Analog Dimming, uses the CTRL pin to linearly adjust the current sense threshold during the PWM high state. When the CTRL pin voltage is less than 1V but more than 100mV, the LED current is:

$$I_{LED} = \frac{V_{CTRL} - 100mV}{4 \bullet R_{SENSE}}$$

When V_{CTRL} is higher than 1.2V, the LED current is clamped to be:

$$I_{LED} = \frac{250mV}{R_{SENSE}}$$

When V_{CTRL} is more than 1V but less than 1.2V, the LED current is in the nonlinear region of V_{ISP}-V_{ISN} Threshold vs V_{CTRL} as shown in the Typical Performance Characteristics.

The LED current programming feature through the CTRL pin possibly increases the total dimming range by a factor of ten. In order to have the accurate LED current, precision resistors are preferred (1% is recommended). The CTRL pin should not be left open. Tie to V_{REF} if not used.

Programming Output Voltage (Constant Voltage Regulation) or Open LED/Overvoltage Threshold

For a boost application, the output voltage can be set by selecting the values of R1 and R2 (see Figure 1) according to the following equation:

$$V_{OUT} = \left(\frac{R1}{R2} + 1\right) \bullet 1.22V$$

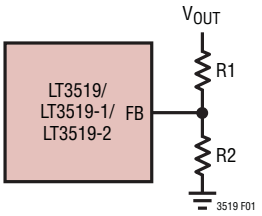

Figure 1. FB Resistor Divider for Boost LED Driver

APPLICATIONS INFORMATION

For open LED protection of a boost type LED driver, set the resistor from the output to the FB pin such that the expected V_{FB} during normal operation will not exceed 1.1V. For a buck mode or buck-boost mode LED driver, the output voltage is typically level-shifted to a signal with respect to GND as illustrated in Figure 2. The open LED voltage level can be expressed as:

$$V_{OUT} = V_{BE(Q1)} + \frac{R1}{R2} \bullet 1.22V$$

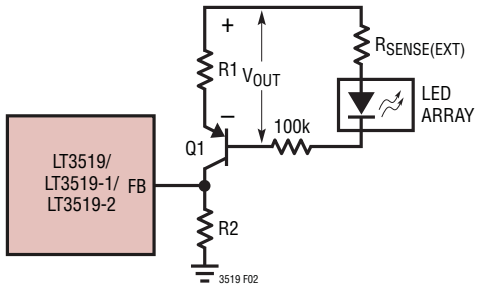

Figure 2. Open LED Protection FB Resistor Connector for Buck Mode or Buck-Boost Mode LED Driver

Programming the Turn-On and Turn-Off Thresholds with the $\overline{SHDN}$/UVLO Pin

The falling $\overline{SHDN}$/UVLO value can be accurately set by the resistor divider. A small 2.2µA pull-down current is active when $\overline{SHDN}$/UVLO is below the 1.22V threshold. The purpose of this current is to allow the user to program the rising hysteresis. The following equations should be used to determine the values of the resistors:

$$V_{IN(FALLING)} = \frac{R1+R2}{R2} \bullet 1.22V$$

$$V_{IN(RISING)} = 2.2\mu A \bullet R1 + V_{IN(FALLING)}$$

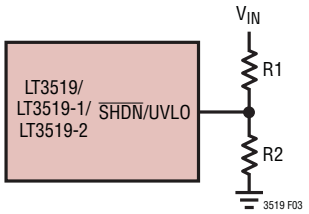

Figure 3. $\overline{SHDN}$/UVLO Threshold Programming

APPLICATIONS INFORMATION

Inductor Selection

The inductor used with the LT3519/LT3519-1/LT3519-2 should have a saturation current rating of 1A or greater. For buck mode LED drivers, the inductor value should be chosen to give a ripple current 150mA or more. In the buck mode, the inductor value can be estimated using the formula:

$$L(\mu H) = \frac{D_{BUCK} \bullet (V_{IN} - V_{LED})}{f_{OSC}\ (MHz) \bullet 0.15A}\left(\frac{\mu H \bullet A \bullet MHz}{V}\right)$$

$$D_{BUCK} = \frac{V_{LED}}{V_{IN}}$$

V_{LED} is the voltage across the LED string, V_{IN} is the input voltage to the converter, and f_{OSC} is the switching frequency. In the boost configuration, the inductor can be estimated using the formula:

$$L(\mu H) = \frac{D_{BOOST} \bullet V_{IN}}{f_{OSC}\ (MHz) \bullet 0.15A}\left(\frac{\mu H \bullet A \bullet MHz}{V}\right)$$

$$D_{BOOST} = \frac{(V_{LED} - V_{IN})}{V_{LED}}$$

Table 1. Recommended Inductor Vendors

VENDOR	PHONE	WEB
Sumida	(408)321-9660	www.sumida.com
Toko	(408)432-8281	www.toko.com
Cooper	(561)998-4100	www.cooperet.com
Vishay	(402)563-6866	www.vishay.com

Input Capacitor Selection

For proper operation, it is necessary to place a bypass capacitor to GND close to the V_{IN} pin of the LT3519/LT3519-1/LT3519-2. A 1µF or greater capacitor with low ESR should be used. A ceramic capacitor is usually the best choice.

In the buck mode configuration, the capacitor at the input to the power converter has large pulsed currents. For best reliability, this capacitor should have low ESR and ESL and have an adequate ripple current rating. A 2.2µF ceramic type capacitor is usually sufficient for LT3519 (400kHz version). A capacitor of proportionately less value for LT3519-1/LT3519-2 (higher frequency version) can be used.

Output Capacitor Selection

The selection of output capacitor depends on the load and converter configuration, i.e., step-up or step-down and the operating frequency. For LED applications, the equivalent resistance of the LED is typically low, and the output filter capacitor should be sized to attenuate the current ripple.

To achieve the same LED ripple current, the required filter capacitor value is larger in the boost and buck-boost mode applications than that in the buck mode applications. Lower operating frequencies will require proportionately higher capacitor values. For LED buck mode applications, a 1µF ceramic capacitor is usually sufficient. For the LED boost and buck-boost mode applications, a 2.2µF ceramic capacitor is usually sufficient. Very high performance PWM dimming applications may require a larger capacitor value to support the LED voltage during PWM transitions.

Use only ceramic capacitors with X7R, X5R or better dielectric as they are best for temperature and DC bias stability of the capacitor value. All ceramic capacitors exhibit loss of capacitance value with increasing DC voltage bias, so it may be necessary to choose a higher value capacitor to get the required capacitance at the operation voltage. Always check that the voltage rating of the capacitor is sufficient.

Table 2. Recommended Ceramic Capacitor Vendors

VENDOR	PHONE	WEB
TDK	(516)535-2600	www.tdk.com
Kemet	(408)986-0424	www.kemet.com
Murata	(814)237-1431	www.murata.com
Taiyo Yuden	(408)573-4150	www.t-yuden.com

APPLICATIONS INFORMATION

Open LED Detection

The LT3519/LT3519-1/LT3519-2 provide an open-collector status pin, $\overline{\text{OPENLED}}$, that pulls low when the FB pin is within ~60mV of its 1.22V regulated voltage. If the open LED clamp voltage is programmed correctly using the FB pin, then the FB pin should never exceed 1.1V when LEDs are connected, therefore, the only way for the FB pin to be within 60mV of the 1.22V regulation voltage is for an open LED event to have occurred.

Inrush Current

The LT3519/LT3519-1/LT3519-2 have a built-in Schottky diode for a boost converter. When supply voltage is applied to V_{IN} pin, the voltage difference between V_{IN} and V_{OUT} generates inrush current flowing from input through the inductor and the Schottky diode to charge the output capacitor. The selection of inductor and capacitor value should ensure the peak of the inrush current to below 10A. In addition, the LT3519/LT3519-1/LT3519-2 turn-on should be delayed until the inrush current is less than the maximum current limit. If the peak of the inrush current is more than 10A, an external Schottky diode should be used to bypass both the inductor and internal Schottky. The recommended Schottky diodes for hot plug are shown on Table 3.

Table 3. Schottky Diodes Recommended for Hot Plug

VENDOR	PART NUMBER	V_R (V)	I_{AVE} (A)
Diodes, Inc	DFLS160	60	1
Zetex	ZLLS10000TA	40	1
International Rectifier	10MQ060N	60	1.5

Board Layout

As with all switching regulators, careful attention must be paid to the PCB board layout and component placement. To prevent electromagnetic interference (EMI) problems, proper layout of high frequency switching paths (see Figure 4) is essential. Minimize the length and area of all traces connected to the switching node pin (SW). Keep the sense voltage pins (ISP and ISN) away from the switching node. The bypass capacitor on the V_{IN} supply to the LT3519 should be placed as close as possible to the V_{IN} pin and GND. Likewise, place C_{OUT} next to the CATHODE pin. Do not extensively route high impedance signals such as FB and CTRL, as they may pick up switching noise. Figure 5 shows the recommended component placement.

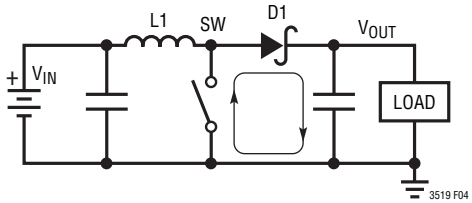

Figure 4. High Frequency Path

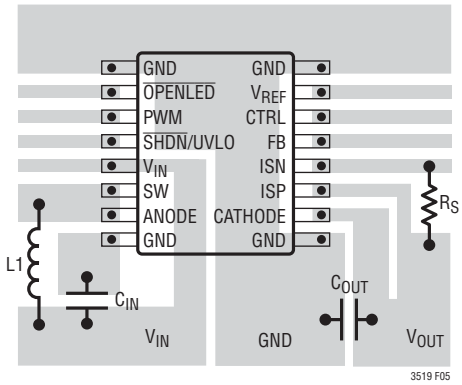

Figure 5. Suggested Layout

TYPICAL APPLICATIONS

4W Boost Automotive LED Driver

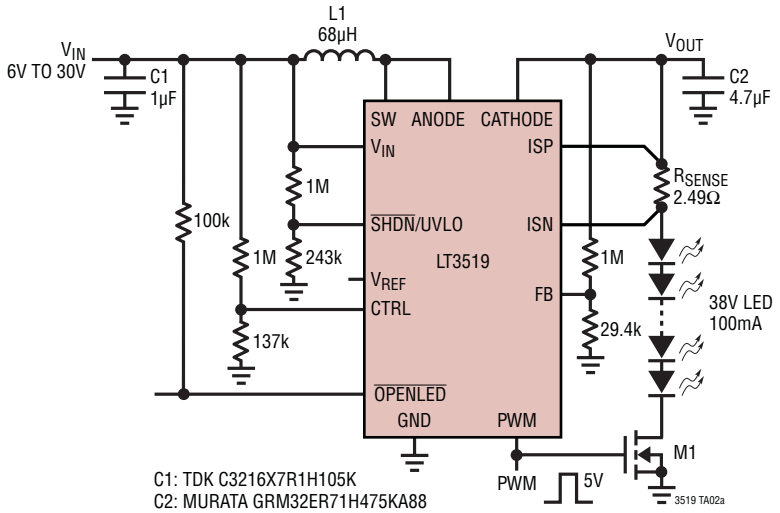

C1: TDK C3216X7R1H105K
C2: MURATA GRM32ER71H475KA88
L1: COILTRONICS DR74-680-R
M1: VISHAY SILICONIX Si2308DS
R_{SENSE}: STACKPOLE ELECTRONICS RHC 2512 2.49

NOTE:
V_{IN} = 8.2V RISING TURN ON
V_{IN} = 6.2V FALLING UVLO
V_{IN} > 10V FULL LED CURRENT AND FOLDBACK BELOW
V_{OUT} 42.7V OVERVOLTAGE PROTECTION

1000:1 PWM Dimming at 120Hz

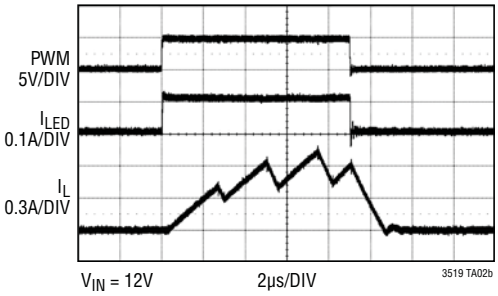

Efficiency vs V_{IN}

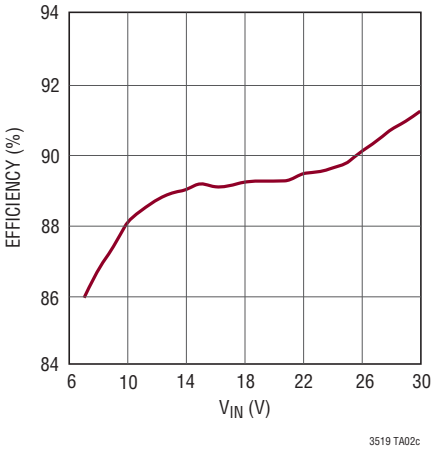

TYPICAL APPLICATIONS

Buck-Boost Mode 150mA LED Driver

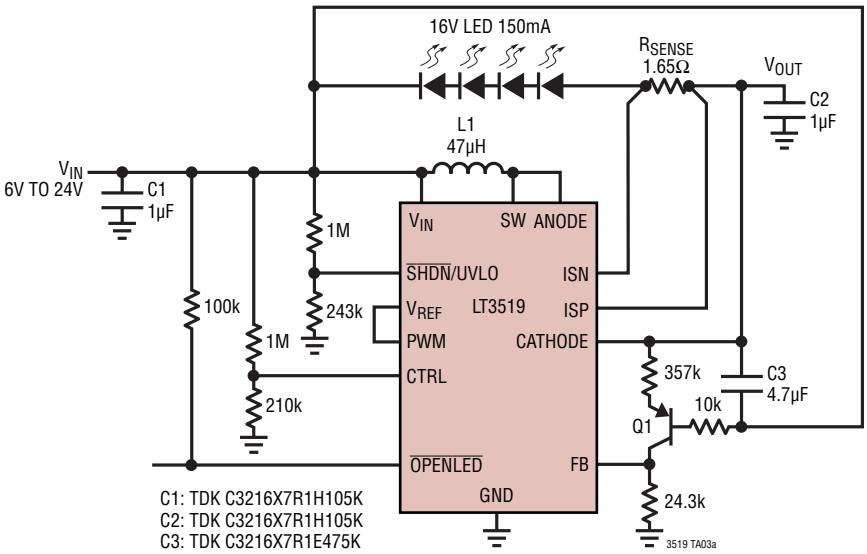

C1: TDK C3216X7R1H105K
C2: TDK C3216X7R1H105K
C3: TDK C3216X7R1E475K
L1: COILTRONICS DR73-470-R
Q1: DIODES FMMT555 PNP

NOTE:
V_{IN} = 8.2V RISING TURN ON
V_{IN} = 6.2V FALLING UVLO
V_{IN} > 7V FULL LED CURRENT AND FOLDBACK BELOW
$V_{OUT} - V_{IN}$ 18.5V OVERVOLTAGE PROTECTION

Waveform for Open LED

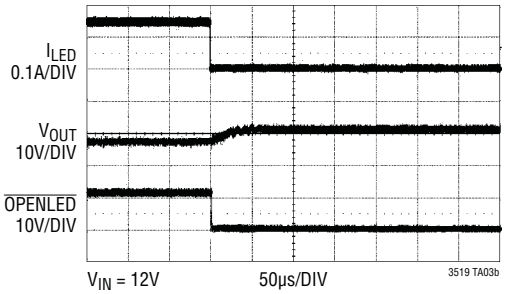

Efficiency vs V_{IN}

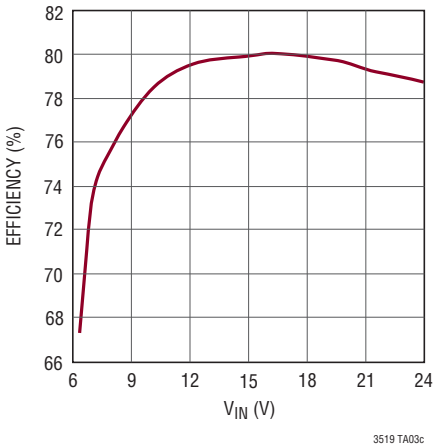

TYPICAL APPLICATIONS

Buck Mode 500mA LED Driver

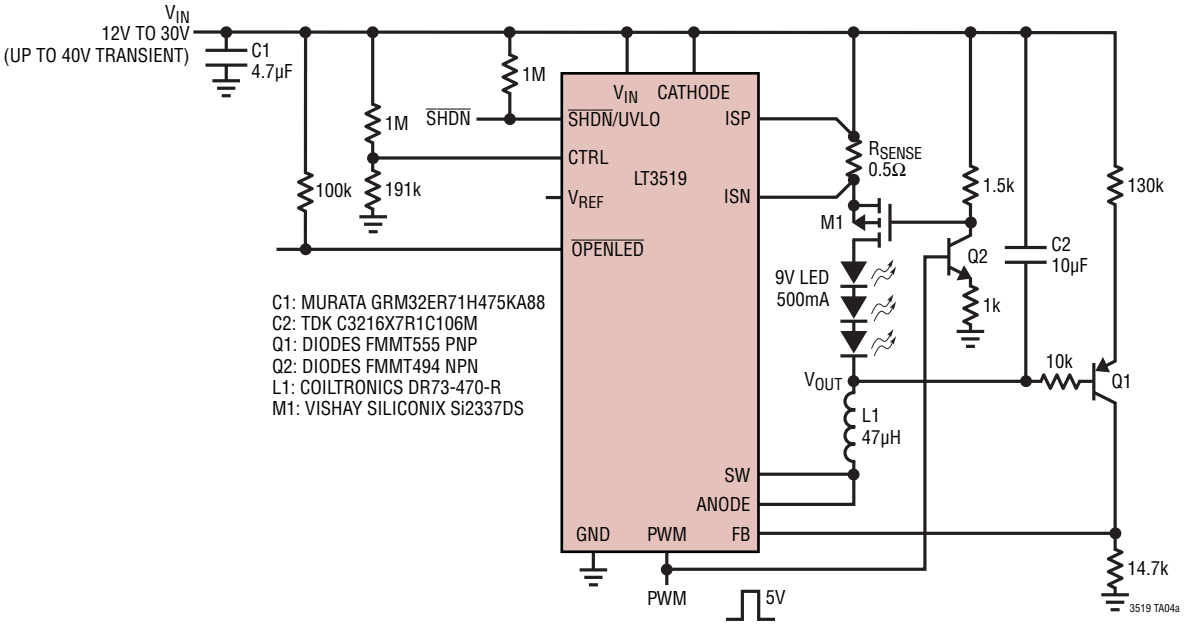

2000:1 PWM Dimming at 120Hz

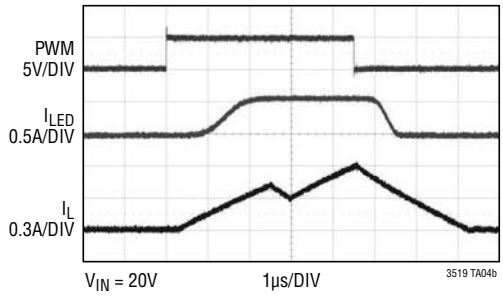

Efficiency vs V_{IN}

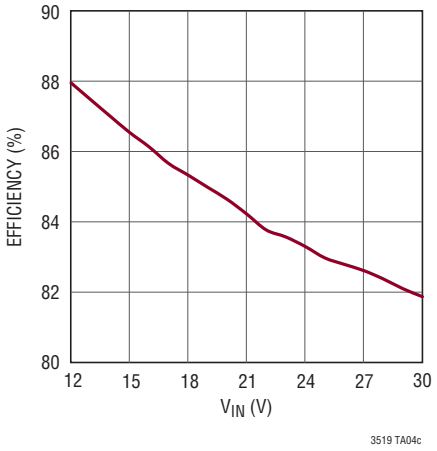

TYPICAL APPLICATIONS

Boost 150mA LED Driver

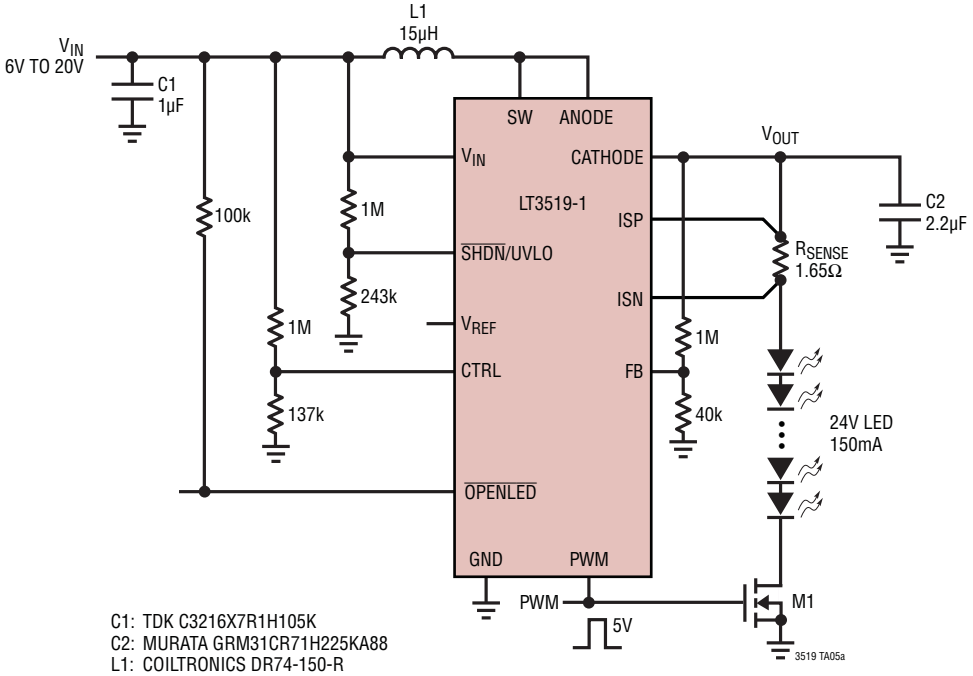

C1: TDK C3216X7R1H105K
C2: MURATA GRM31CR71H225KA88
L1: COILTRONICS DR74-150-R
M1: VISHAY SILICONIX Si2318DS
R_{SENSE}: STACKPOLE ELECTRONICS RHC 2512 2.49 AND 4.99

NOTE:
V_{IN} = 8.2V RISING TURN-ON
V_{IN} = 6.2V FALLING UVLO
V_{IN} > 10V FULL LED CURRENT AND FOLDBACK BELOW
V_{OUT} = 31.7V OVERVOLTAGE PROTECTION

3000:1 PWM Dimming at 120Hz

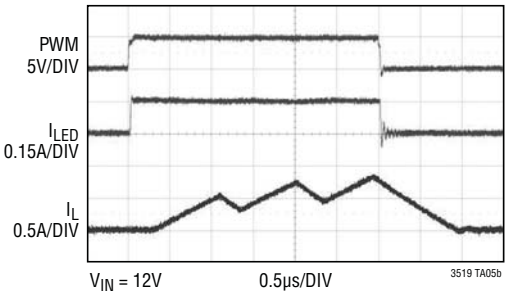

Efficiency vs V_{IN}

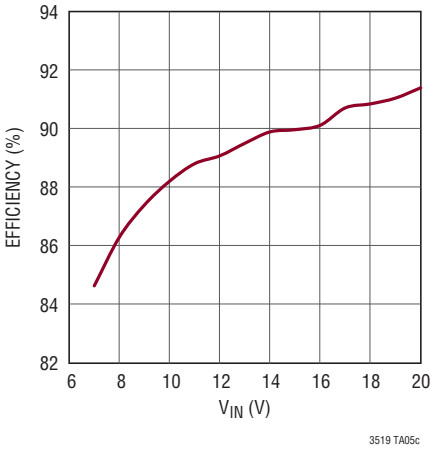

TYPICAL APPLICATIONS

Minimum BOM Buck Mode 500mA LED Driver

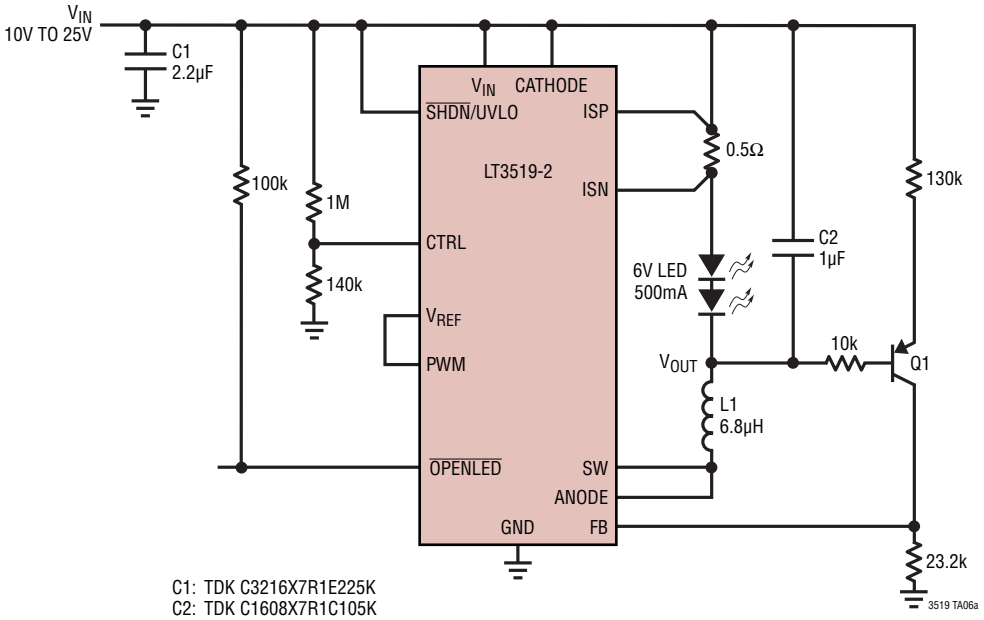

C1: TDK C3216X7R1E225K
C2: TDK C1608X7R1C105K
Q1: DIODES FMMT555 PNP
L1: COILTRONICS DR73-068-R

Waveforms for Open LED

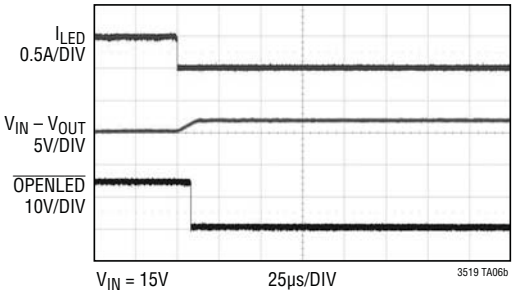

Efficiency vs V_{IN}

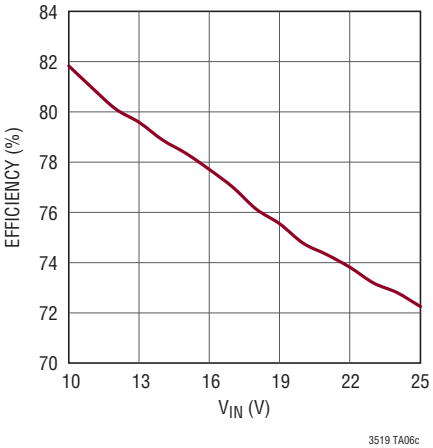

PACKAGE DESCRIPTION

MS Package
16-Lead Plastic MSOP
(Reference LTC DWG # 05-08-1669 Rev Ø)

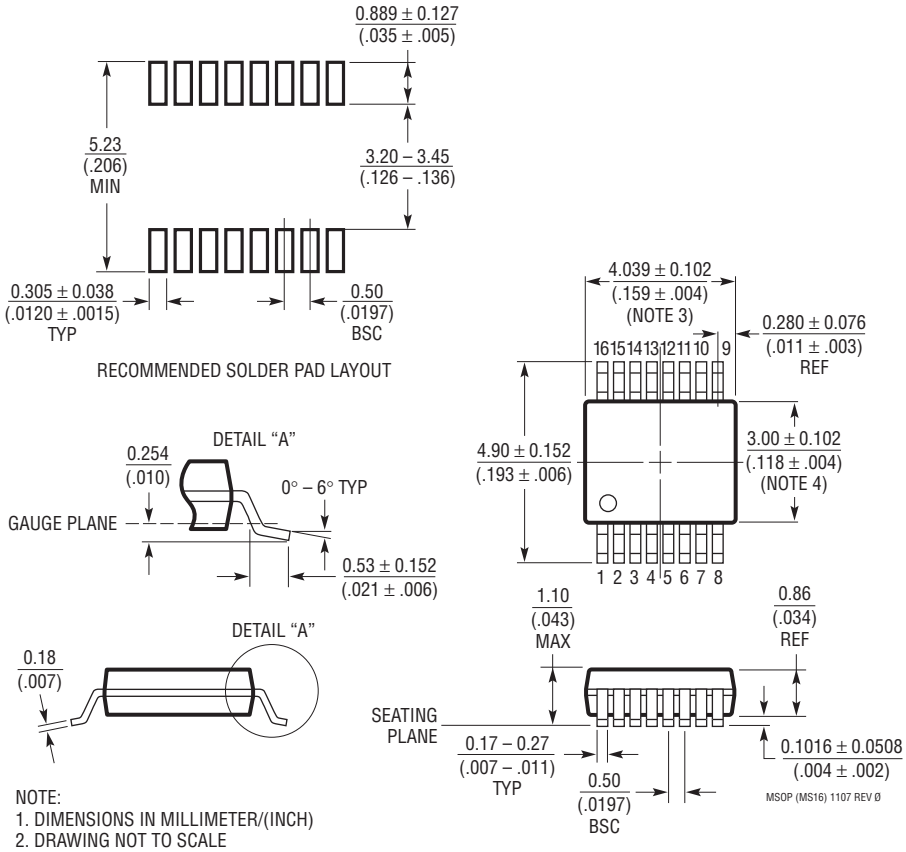

NOTE:
1. DIMENSIONS IN MILLIMETER/(INCH)
2. DRAWING NOT TO SCALE
3. DIMENSION DOES NOT INCLUDE MOLD FLASH, PROTRUSIONS OR GATE BURRS.
   MOLD FLASH, PROTRUSIONS OR GATE BURRS SHALL NOT EXCEED 0.152mm (.006") PER SIDE
4. DIMENSION DOES NOT INCLUDE INTERLEAD FLASH OR PROTRUSIONS.
   INTERLEAD FLASH OR PROTRUSIONS SHALL NOT EXCEED 0.152mm (.006") PER SIDE
5. LEAD COPLANARITY (BOTTOM OF LEADS AFTER FORMING) SHALL BE 0.102mm (.004") MAX

REVISION HISTORY

REV	DATE	DESCRIPTION	PAGE NUMBER
A	Nov 09	Updated to Add LT3519-1 and LT3519-2 Parts	1-20

Information furnished by Linear Technology Corporation is believed to be accurate and reliable. However, no responsibility is assumed for its use. Linear Technology Corporation makes no representation that the interconnection of its circuits as described herein will not infringe on existing patent rights.

TYPICAL APPLICATIONS

SEPIC 150mA LED Driver

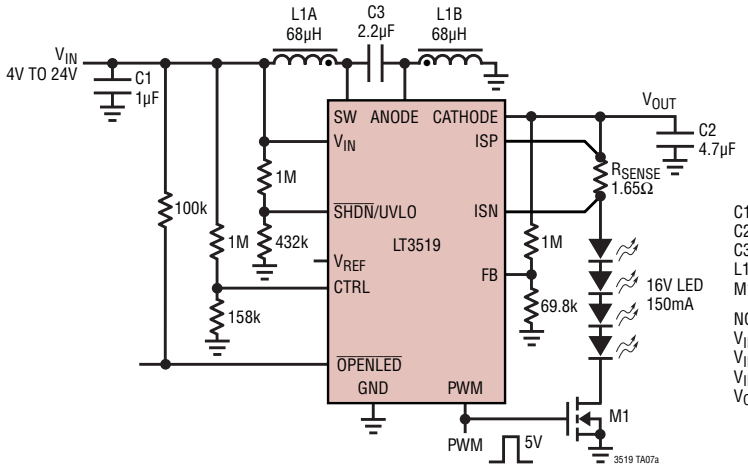

C1: TDK C3216X7R1H105K
C2: TDK C3216X7R1E475K
C3: TDK C3216X7R1E225K
L1: COILTRONICS DRQ74-680-R (COUPLED INDUCTOR)
M1: VISHAY SILICONIX Si2318DS

NOTE:
V_{IN} = 6V RISING TURN ON
V_{IN} = 4V FALLING UVLO
V_{IN} > 9V FULL LED CURRENT AND FOLDBACK BELOW V_{OUT} 18.5V OVERVOLTAGE PROTECTION

Waveforms for LED Shorted to Ground

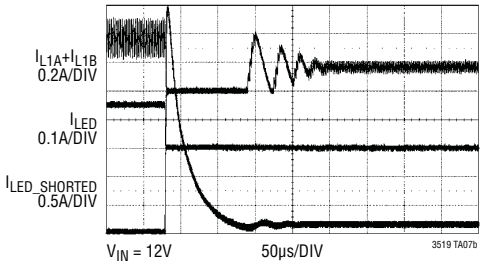

Efficiency vs V_{IN}

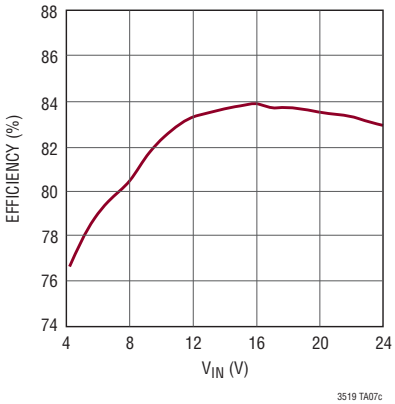

RELATED PARTS

PART NUMBER	DESCRIPTION	COMMENTS
LT1618	Constant-Current, Constant-Voltage 1.24MHz, High Efficiency Boost Regulator	Up to 16 White LEDs, V_{IN}: 1.6V to 18V, $V_{OUT(MAX)}$ = 34V, I_Q= 1.8mA, I_{SD} < 1µA, MS Package
LT3466/LT3466-1	Dual Full Function, 2MHz Diodes White LED Step-Up Converter with Built-In Schottkys	Up to 20 White LEDs, V_{IN}: 2.7V to 24V, $V_{OUT(MAX)}$ = 39V, DFN/TSSOP-16 Packages
LT3486	Dual 1.3A White LED Converter with 1000:1 True Color PWM Dimming	Drives Up to 16 100mA White LEDs. V_{IN}: 2.5V to 24V, $V_{OUT(MAX)}$ = 36V, DFN/TSSOP Packages
LT3491	2.3MHz White LED Driver with Integrated Schottky Diode	Drives Up to 6 LEDs. V_{IN}: 2.5V to 12V, $V_{OUT(MAX)}$ = 27V, SC70/DFN Packages
LT3497	Dual Full Function 2.3MHz LED Driver with 250:1 True Color PWM Dimming with Integrated Schottky Diodes	Drives Up to 12 LEDs. V_{IN}: 2.5V to 10V, $V_{OUT(MAX)}$ = 32V, 3mm × 2mm DFN Package
LT3517	Full-Featured LED Driver with 1.5A Switch Current	V_{IN}: 3V to 40V, $V_{OUT(MAX)}$ = 45V, Dimming = 5.000:1 True Color PWM, I_{SD} < 1µA, 4mm × 4mm QFN and TSSOP Packages
LT3518	Full-Featured LED Driver with 2.3A Switch Current	V_{IN}: 3V to 40V, $V_{OUT(MAX)}$ = 45V, Dimming = 3.000:1 True Color PWM, I_{SD} < 1µA, 4mm × 4mm QFN and TSSOP Packages
LT3591	Constant-Current, 1MHz, High Efficiency White LED Step-Up Converter with Built-in Schottkys	Up to 10 White LEDs, V_{IN}: 2.5V to 12V, $V_{OUT(MAX)}$ = 45V, 3mm × 2mm DFN Package

Linear Technology Corporation
1630 McCarthy Blvd., Milpitas, CA 95035-7417
(408) 432-1900 • FAX: (408) 434-0507 • www.linear.com

LT 1109 REV A • PRINTED IN USA
© LINEAR TECHNOLOGY CORPORATION 2009

Общество с ограниченной ответственностью «МосЧип» ИНН 7719860671 / КПП 771901001
Адрес: 105318, г.Москва, ул.Щербаковская д.3, офис 1107

Данный компонент на территории Российской Федерации

Вы можете приобрести в компании MosChip.

Для оперативного оформления запроса Вам необходимо перейти по данной ссылке:

http://moschip.ru/get-element

Вы можете разместить у нас заказ для любого Вашего проекта, будь то серийное производство или разработка единичного прибора.

В нашем ассортименте представлены ведущие мировые производители активных и пассивных электронных компонентов.

Нашей специализацией является поставка электронной компонентной базы двойного назначения, продукции таких производителей как XILINX, Intel (ex.ALTERA), Vicor, Microchip, Texas Instruments, Analog Devices, Mini-Circuits, Amphenol, Glenair.

Сотрудничество с глобальными дистрибьюторами электронных компонентов, предоставляет возможность заказывать и получать с международных складов практически любой перечень компонентов в оптимальные для Вас сроки.

На всех этапах разработки и производства наши партнеры могут получить квалифицированную поддержку опытных инженеров.

Система менеджмента качества компании отвечает требованиям в соответствии с ГОСТ Р ИСО 9001, ГОСТ РВ 0015-002 и ЭС РД 009

Офис по работе с юридическими лицами:

105318, г.Москва, ул.Щербаковская д.3, офис 1107, 1118, ДЦ «Щербаковский»

Телефон: +7 495 668-12-70 (многоканальный)

Факс: +7 495 668-12-70 (доб.304)

E-mail: info@moschip.ru

Skype отдела продаж:
moschip.ru
moschip.ru_4
moschip.ru_6
moschip.ru_9