This document was generated on 06/07/2010

PLEASE CHECK WWW.MOLEX.COM FOR LATEST PART INFORMATION

Part Number: 0950435881

Status: Active

Overview: modular_plugs_jacks

Description: Modular Plug, Short Body, Shielded, 8/8, Cat5 for 6.00mm (.236") Cable Outside Diameter

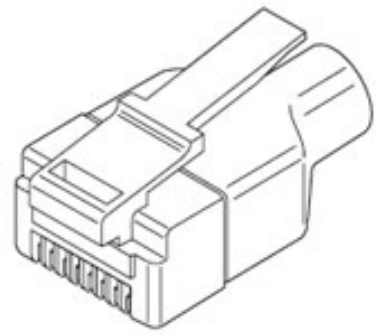

Series

image - Reference only

Documents:

3D Model
Drawing (PDF)
Product Specification PS-95043 (PDF)
RoHS Certificate of Compliance (PDF)

Agency Certification

CSA	LR19980
UL	E107635

General

Product Family	Modular Jacks/Plugs
Series	95043
Comments	Colored Boot|Cable to Plug Tensile Strength: 98.0N (22 lb)
Component Type	Wire Plug
Magnetic	No
Overview	modular_plugs_jacks
Performance Category	5
Power over Ethernet (PoE)	N/A
Product Name	RJ45

Physical

Boot Color	N/A
Color - Resin	Clear
Durability (mating cycles max)	750
Flammability	94V-2
Inverted / Top Latch	N/A
Lightpipes/LEDs	None
Material - Metal	Copper Alloy, Phosphor Bronze
Material - Plating Mating	Gold
Material - Plating Termination	Tin
Material - Resin	Polycarbonate
Orientation	N/A
PCB Locator	No
PCB Retention	None
Packaging Type	Bag
Pitch - Mating Interface (in)	0.040 In
Pitch - Mating Interface (mm)	1.02 mm
Plating min: Mating (µin)	12
Plating min: Mating (µm)	0.3
Plating min: Termination (µin)	50.8
Plating min: Termination (µm)	1.27
Ports	1
Positions / Loaded Contacts	8/8
Surface Mount Compatible (SMC)	N/A
Temperature Range - Operating	-40°C to +60°C
Termination Interface: Style	IDT or Pierce
Waterproof / Dustproof	No
Wire/Cable Type	Round

Electrical

EU RoHS
ELV and RoHS Compliant
REACH SVHC
Not Reviewed
Halogen-Free Status
Not Reviewed

China RoHS

Need more information on product environmental compliance?

Email productcompliance@molex.com
For a multiple part number RoHS Certificate of Compliance, click here

Please visit the Contact Us section for any non-product compliance questions.

Search Parts in this Series
95043Series

Mates With
FCC 68 Jacks

Application Tooling | **FAQ**

Tooling specifications and manuals are found by selecting the products below. Crimp Height Specifications are then contained in the Application Tooling Specification document.

Global

Description	Product #
Termination Machine, Modular Plug	0623001400
Parallel Action Handtool for 95043 Shielded Plug, FCC 68, 8/8 Circuit, Short Body	0690081104

Current - Maximum per Contact	1.5A
Grounding to Panel	N/A
Shielded	Yes
Voltage - Maximum	125V AC (RMS)/DC

Material Info

Reference - Drawing Numbers

Application Specification	AS-95043
Packaging Specification	PK-95043
Product Specification	PS-95043
Sales Drawing	SDA-95043

This document was generated on 06/07/2010

PLEASE CHECK WWW.MOLEX.COM FOR LATEST PART INFORMATION

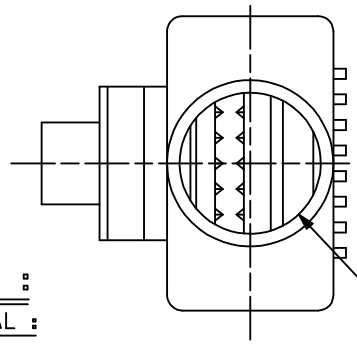

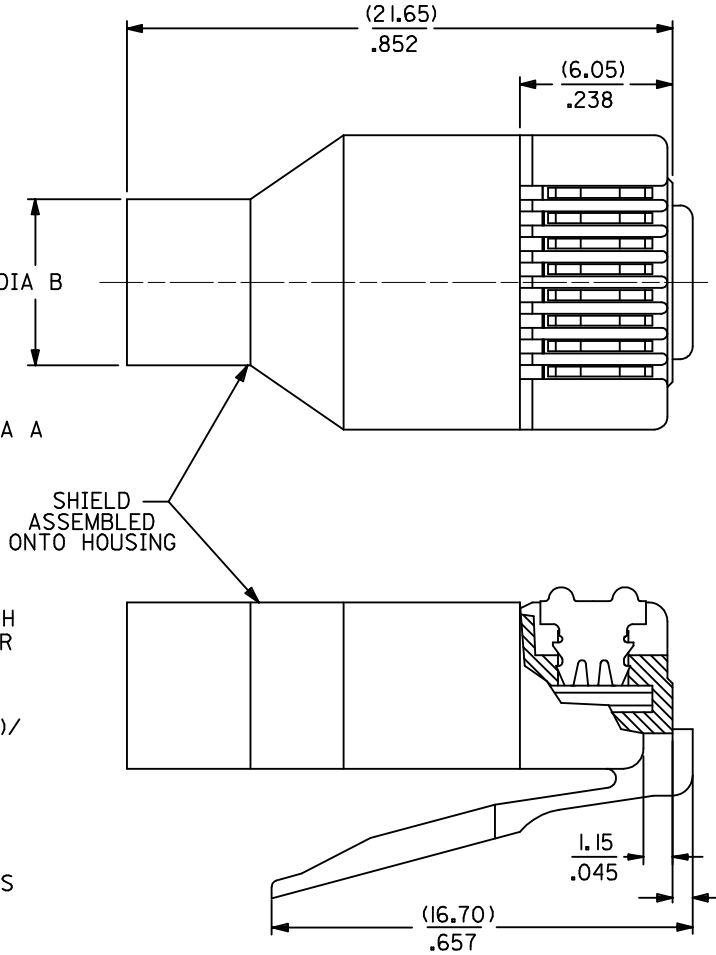

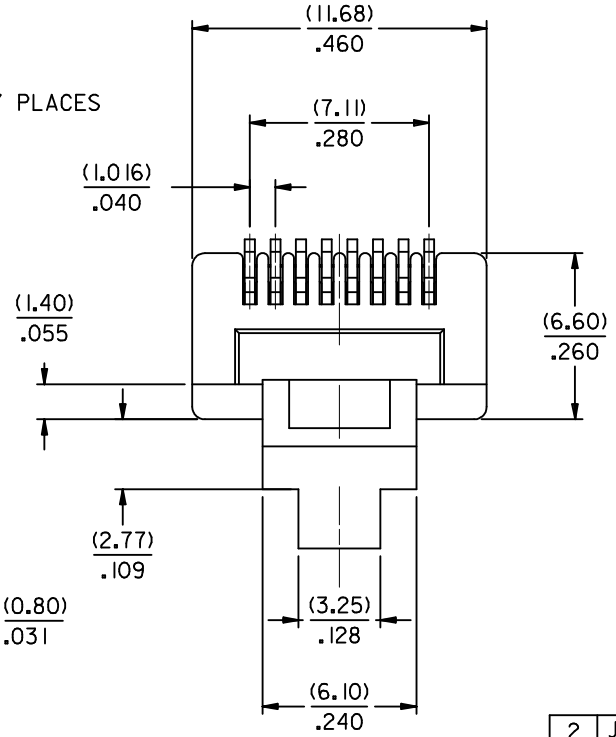

NOTES :

1- MATERIAL :

PLUG HOUSING :

CLEAR POLYCARBONATE

TERMINALS :

PHOSPHOR BRONZE PLATED WITH (0.00127 MM)/.000050 INCH MIN. GOLD IN CONTACT AREA, (0.00127 MM)/.000050 INCH MIN. PURE TIN IN PIERCE AREA BOTH OVER (0.00127 MM)/.000050 INCH MIN. NICKEL

SHIELD :

COPPER ALLOY PLATED WITH (0.00254 MM)/.000100 INCH MIN. BRIGHT TIN OVER (0.00127 MM)/.000050 INCH MIN. NICKEL

2- PRODUCT SPECIFICATION : PS-95043

3- APPLICATION SPECIFICATION : AS-95043

4- PACKAGING SPECIFICATION : PK-95043

5- PLUG FOR MATING WITH FCC 68 STYLE JACKS MOLEX SERIES : 95040-95060-95122-95123

SEE SHEET 2	EC NO: E2009-0512	DRWN:DCARTON 2009/04/17	CHKD: 2009/04/17
APPR: JWALLACE 2009/04/17	DESCRIPTION		
K	REV		

QUALITY SYMBOLS

▼=0

(C)=0

GENERAL TOLERANCES (UNLESS SPECIFIED)

	mm	INCH
4 PLACES	± ---	± ---
3 PLACES	± ---	± .010
2 PLACES	± 0.25	± .014
1 PLACE	± 0.35	± ---
ANGULAR ± 2 °		

DRAFT WHERE APPLICABLE MUST REMAIN WITHIN DIMENSIONS

DIMENSION STYLE: MM/IN

SCALE: 1:1

DESIGN UNITS: METRIC

THIRD ANGLE PROJECTION

DRAWN BY: CB DATE

CHECKED BY: TB DATE

APPROVED BY: FB DATE

MATERIAL NO.: SEE SHEET 2

TITLE: SHIELDED MODULAR PLUG 8 POSITION FOR ROUND CABLE

molex MOLEX INCORPORATED

DOCUMENT NO.: SDA-95043

SHEET NO.: 1 OF 2

SIZE: A3

THIS DRAWING CONTAINS INFORMATION THAT IS PROPRIETARY TO MOLEX INCORPORATED AND SHOULD NOT BE USED WITHOUT WRITTEN PERMISSION

ASSEMBLY PART NUMBER	TOOLED	CABLE DIAMETER	BOOT			DIM A	DIM B	'MG' MARK	PARTS/ UNIT	PACKAGING VERSION
				COLOR	RAL NBR					
95043-1881	YES	(5.10-5.60)/.200-.220	NO	N/A	N/A	(5.60)/.220	(6.60)/.260	NO	1	A
95043-2881	YES		NO	N/A	N/A			YES	1	A
95043-2891	YES		YES	BLACK	9005			YES	1	A
95043-2892	YES		YES	GREY	7012			YES	1	A
95043-2893	YES		YES	GREEN	6016			YES	1	A
95043-2894	YES		YES	RED	3000			YES	1	A
95043-2895	YES		YES	YELLOW	1021			YES	1	A
95043-2896	YES		YES	BLUE	5015			YES	1	A
95043-3891	YES		YES	BLACK	9005			YES	1000	A
95043-6891	YES	(5.10-5.60)/.200-.220	YES	BLACK	9005	(5.60)/.220	(6.60)/.260	YES	5	B
95043-4881	YES	(5.60-6.20)/.220-.244	NO	N/A	N/A	(6.20)/.244	(7.20)/.283	NO	1	A
95043-5881	YES		NO	N/A	N/A			YES	1	A
95043-5891	YES		YES	BLACK	9005			YES	1	A
95043-5892	YES		YES	GREY	7012			YES	1	A
95043-5893	YES		YES	GREEN	6016			YES	1	A
95043-5894	YES		YES	RED	3000			YES	1	A
95043-5895	YES		YES	YELLOW	1021			YES	1	A
95043-5896	YES		YES	BLUE	5015			YES	1	A
95043-5897	YES	(5.60-6.20)/.220-.244	YES	BLACK	9005	(6.20)/.244	(7.20)/.283	YES	1	C

SHIELDED PLUG COMPOSITION

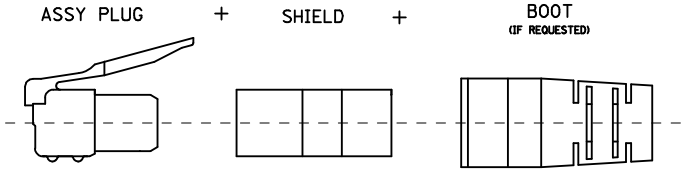

ADDED OPTION
EC NO: E2009-0512 2009/04/17
DRWN:DCARTON 2009/04/17
CH'KD: 2009/04/17
APPR: JWALLACE 2009/04/17
DESCRIPTION
REV J

QUALITY SYMBOLS
▼=0
(C)=0

GENERAL TOLERANCES (UNLESS SPECIFIED)

	mm	INCH
4 PLACES	± ---	± ---
3 PLACES	± ---	± .010
2 PLACES	± 0.25	± .014
1 PLACE	± 0.35	± ---
ANGULAR ± 2 °		

DRAFT WHERE APPLICABLE MUST REMAIN WITHIN DIMENSIONS

DIMENSION STYLE: MM/IN
SCALE: 1:1
DESIGN UNITS: METRIC
THIRD ANGLE PROJECTION

DRAWN BY: CB DATE
CHECKED BY: TB DATE
APPROVED BY: FB DATE

TITLE: SHIELDED MODULAR PLUG 8 POSITION FOR ROUND CABLE

molex MOLEX INCORPORATED

MATERIAL NO.: SEE CHART
DOCUMENT NO.: SDA-95043
SHEET NO.: 2 OF 2
SIZE: A3

THIS DRAWING CONTAINS INFORMATION THAT IS PROPRIETARY TO MOLEX INCORPORATED AND SHOULD NOT BE USED WITHOUT WRITTEN PERMISSION

Общество с ограниченной ответственностью «МосЧип» ИНН 7719860671 / КПП 771901001
Адрес: 105318, г.Москва, ул.Щербаковская д.3, офис 1107

Данный компонент на территории Российской Федерации

Вы можете приобрести в компании MosChip.

Для оперативного оформления запроса Вам необходимо перейти по данной ссылке:

http://moschip.ru/get-element

Вы можете разместить у нас заказ для любого Вашего проекта, будь то серийное производство или разработка единичного прибора.

В нашем ассортименте представлены ведущие мировые производители активных и пассивных электронных компонентов.

Нашей специализацией является поставка электронной компонентной базы двойного назначения, продукции таких производителей как XILINX, Intel (ex.ALTERA), Vicor, Microchip, Texas Instruments, Analog Devices, Mini-Circuits, Amphenol, Glenair.

Сотрудничество с глобальными дистрибьюторами электронных компонентов, предоставляет возможность заказывать и получать с международных складов практически любой перечень компонентов в оптимальные для Вас сроки.

На всех этапах разработки и производства наши партнеры могут получить квалифицированную поддержку опытных инженеров.

Система менеджмента качества компании отвечает требованиям в соответствии с ГОСТ Р ИСО 9001, ГОСТ РВ 0015-002 и ЭС РД 009

Офис по работе с юридическими лицами:

105318, г.Москва, ул.Щербаковская д.3, офис 1107, 1118, ДЦ «Щербаковский»

Телефон: +7 495 668-12-70 (многоканальный)

Факс: +7 495 668-12-70 (доб.304)

E-mail: info@moschip.ru

Skype отдела продаж:
moschip.ru
moschip.ru_4
moschip.ru_6
moschip.ru_9