# Compact fans for AC and DC

version 2014

ebmpapst

The engineer's choice

GREEN TECH

# Trendsetter in fan technology

*Uncompromising quality made by ebm-papst*

**Among the best.**
Trendsetting with innovative technologies. Listening to customers' needs. Developing new ideas to meet requirements and realising them with pioneering spirit. This philosophy has made ebm-papst the technological leader in the world of fans.

A brand which has very little real competition because every fan is a product of decades of application expertise gained from large-volume production and because we are in a position to produce highly efficient quality products. Our intelligent solutions for electronics cooling ensure that you are one step ahead of competitors thanks to innovative, reliable top-quality technology which is cost-favourable and in line with market requirements. And if required, tailor-made right down to the last detail. In other words, if you need fans which do not yet actually exist, contact us.

Insist on ebm-papst.

# Table of contents


**Information**
- The company 4
- GreenTech: The Green Company 6
- Expertise and technology 8
- Tailor-made 10
- Optional special designs 12
- Types of fans 13
- Selecting the correct fan 14
- Fan installation 15
- Service life 17
- Definitions 18
- Type code 19

**DC axial fans** 25
- Axial fans 31

**DC centrifugal fans** 89
- Centrifugal fans 93
- Tangential blowers 134
- Centrifugal fans and blowers 136

**DC fans - specials** 161
- Speed signal 164
- Alarm signal 168
- Vario-Pro® 173
- Speed setting 174
- Protected fans, Type of protection: IP 54 / IP 68 177

**ACmaxx / GreenTech EC-Compact fans** 179
- Axial fans 184

**AC axial fans** 201
- Axial fans 204

**AC centrifugal fans** 227
- Centrifugal fans 230

**Accessories** 237
- Guard grilles 238
- Filter guard grilles 246
- Inlet nozzles 248
- Connection cables 251
- Handheld programmer 252
- Accessories 253
- Electrical connections 254

**ebm-papst representatives & subsidiaries** 260

# Company profile: ebm-papst

*The entire scope of ventilation and drive technology: this is the world of ebm-papst. More than 11.000 people – in Germany and throughout the world – develop, produce and sell our motors and fans. Our global presence and our unique range of products based on a quality standard that surpasses every other have made us what we are: world market leader in motors and fans. Expertly knowing what our customers need and incessantly striving to arrive at the perfect application solution for a wide variety of different industries is what determines our daily work.*
*Those who know us know the high standards we apply to our work and know our creed: to be as close to our customers as possible and to simply be the best in terms of innovation and reliability.*

**Our history – Our drive**

Rooted in ebm, PAPST and mvl, the three leading innovators in the development and production of motors and fans, ebm-papst has established itself as the world market leader. Now as ever, our legendary inventive spirit shines through in products that set standards in many segments of industry worldwide. We are proud to say that despite difficult competition, our performance has always been exemplary and outstanding – in business, in our personal relationship with our customers, and of course with respect to technology and engineering. For decades, we have contributed to the world of air technology and drive engineering with small revolutions and large milestones.

To maintain this advantage in skills and knowledge to get maximum quality and thus the highest degree of customer satisfaction, our employees around the world put their passion and dedication to work for you.

**Passionately involved in R&D**

Our catalogues just list the results of our incessant efforts in R&D: products of highest quality and reliability. After all, it is our passion to constantly try something new and improve what we have. In doing so, we take advantage of the latest development methods and state-of-the-art technology and invest quite heavily in R&D facilities. Best of all, though, we rely on excellently trained and skilled engineers and technicians to be at your service in R&D and Sales & Distribution.

**Producing and safeguarding high-quality products and services**

This is our promise without any compromise. Whether produced in one of our six factories in Germany or one of our eleven international production sites, our products always have the same high level of quality. This quality control is something you can definitely rely on! And this across all levels of production and throughout all processes: consulting customers, development, material selection through to picking certified, choice suppliers and on to the production of parts and final delivery. On top of this, our products have to pass the most rigorous tests under all realistic operating conditions: continuous stress test, salt spray test, vibration test, or precision noise measuring, just to mention a few. And the product gets clearance for serial production only after all the desired characteristics have been determined to be just right.

Environmental care is another priority with ebm-papst. This is why we have developed our product line in EC technology, which makes for very low power consumption. Due to our manufacturing philosophy, there is absolute focus on environmental care in production, recycling, waste and wastewater disposal.

**Global Domestic**

In order to be specialist for customised solutions throughout the world, you need strong partners. Global Domestic – i.e. being present all over the world and being a national company in each individual country – is how we have established ourselves in all important markets on this globe with our successful subsidiaries. And so you will always find ebm-papst close to home, speaking your language, and knowing the demands of your markets. Besides, our worldwide production alliance serves as a basis for competitive pricing. Our global services and logistic outlets, i.e. IT networking, safeguard short reaction times and just-in-time delivery.

All our efforts are documented in a comprehensive quality management system, both for products and services. Being certified as complying with the tough requirements of the international standards DIN EN ISO 9001, ISO/TS 16949-2 and of standard DIN EN ISO 14001 is just one seal of approval we have received for our unceasing efforts to provide only the best quality products and services.

# Sustainability is at the centre of our thoughts and actions. Out of conviction!

*Eco-friendliness and sustainability have always been at the core of our thoughts and actions. For decades, we have worked according to the simple but strict creed of our co-founder Gerhard Sturm: "Each new product we develop has to be better than the last one in terms of economy and ecology." GreenTech is the ultimate expression of our corporate philosophy.*

**GreenTech is pro-active development.**
Even in the design phase, the materials and processes we use are optimised for the greatest possible eco-friendliness, energy balance and – wherever possible – recyclability. We continually improve the material and performance of our products, as well as the flow and noise characteristics. At the same time, we significantly reduce energy conumption. Close co-operation with universities and scientific institutes and the professorship we endow in the area of power engineering and regenerative energies allows us to profit from the latest research finings in these fields – and at the same time ensure highly qualified young academics.

**GreenTech is eco-friendly production.**
GreenTech also stands for maximum energy efficiency in our production processes. There, the intelligent use of industrial waste heat and groundwater cooling, photovoltaics and, of course, our own cooling and ventilation technology are of the utmost importance. Our most modern plant, for instance, consumes 91% less energy than currently specified and required. In this way, our products contribute to protecting the environment, from their origin to their recyclable packaging.

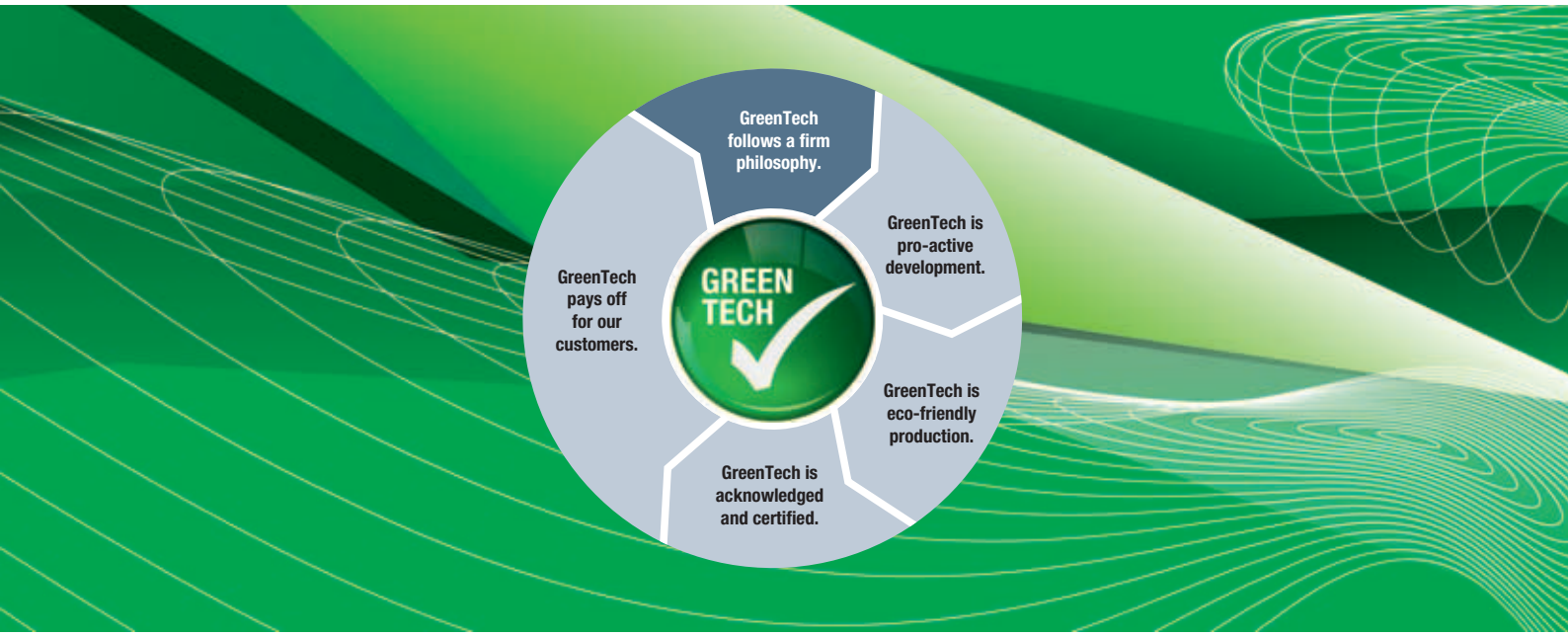

**GreenTech is acknowledged and certified.**
Every step in our chain of production meets the stringent standards of environmental specialists and the public.
This supports our position as Germany's most sustainable company 2013, as does the DEKRA Award 2012 we received in the category "Umwelt – Herausforderung Energiewende / Environment – Challenge: Transition to more sustainable energy systems", to name only a few of a large number of examples. The environmental advantage gained in the performance of the products developed from our GreenTech philosophy can also be measured in the fulfillment of the most stringent energy and environmental standards. In many instances, our products are already well below the thresholds energy legislation will impose a few years from now – several times over.

**Our customers profit from this every day.**
The heart of GreenTech is future-oriented EC technology from ebm-papst. The EC technology at the core of our most efficient motors and fans allows efficiency of up to 90%, saves energy at a very high level, significantly extends service life and makes our products maintenance-free. These values pay off not only for the environment, but every cent also pays off for the user! All ebm-papst products – even those for which GreenTech EC technology does not (yet) make sense from an application viewpoint – feature the greatest possible connection of economy and ecology.

# Expertise and technology

**Drive expertise**

For the past 60 years, all conceivable types and applications of drive engineering have played an essential role at ebm-papst. A commitment that is the foundation for the development of optimum drive solutions – regardless of the type of fan and its usage. DC fans are generally equipped with electronically commutated external rotor motors; in order to save as much space as possible, commutation electronic components are integrated in the hub of the fan. Our AC fans are mostly driven by shaded-pole or capacitor motors based on the external rotor principle. In the 3900 and 9900 range of particularly slim fans, internal rotor motors are used.

**Low-noise performance**

Our aerodynamically optimised design and high mechanical precision produces outstanding noise properties in series production. So-called "soft" commutation electronics of the DC fans ensure an excellent noise performance. By avoiding steep switching edges when the individual coils are switched, this reduces the structure-borne noise from the motor. Computer-aided measurements and series of analyses performed in a state-of-the-art sound measuring chamber are conducted on each fan model from the very beginning.

**Long service life**

The bearing system plays a vital role both in the long life time and quietness of device fans. The SINTEC compact bearing provides most of the device fans with a proven bearing system. Constant low noise during the entire operating time and considerably lower shock sensitivity are the outstanding features of this bearing technology. In addition, with regard to temperature endurance, Sintec compact bearings can be used without problems in most applications. Despite the slightly higher noise and shock sensitivity of ball bearings, this bearing technology should be given preference for fans exposed to extreme thermal and adverse application conditions (e.g. extreme environmental conditions, critical installation position, etc.). The service life data provided in this catalogue is based on extensive service life tests and mathematically / scientifically proven service life calculations. Our product descriptions are continuously updated with all relevant data obtained from long-term tests.

**Streamline: Aerodynamics**

With the aid of state-of-the-art computer programs, we are able to optimise the fan impellers and the inner shape of the housing. Air output and available motor performance are exactly matched with the size of fan. This guarantees the low noise that is typical for ebm-papst, even at high back pressure.

**Sturdy construction – in metal or plastic**

Fans of all-metal construction: Sturdy and resistant. The housing is made of an aluminium alloy whereas the metal surfaces that are subject to corrosion are permanently protected by an impact- and abrasion-resistant electrophoretic baked enamel. This particular version is highly recyclable. Fans with fibreglass-reinforced plastic housing and impeller: Excellent stability and low weight distinguish this highly efficient fan concept. Combinations of metal housing and plastic impeller unite the advantages of both types of design.

**Product images**

The dimensioned drawings and product photos that appear in the catalogue are for orientation purposes and may differ in some details from the actual product design.

**Product liability**

Motors and fans from ebm-papst are components intended for proper installation. The customer bears responsibility for the overall end product.

**Safety is included**

It goes without saying that all ebm-papst fans conform to the approval requirements of the VDE (Association of German Electrical Engineers) and the standards and regulations of UL and CSA. All fans conform to the European Standard EN 60335 or EN 60950 plus those of the UL (Underwriters Laboratories) and CSA (Canadian Standards Association). With few exceptions, our DC fans are designed to meet the requirements of protection class 3 / protection class voltage. AC fans are protection class 1. ebm-papst fans meet the highest requirements of electrical safety. All design variants feature reverse polarity and locked rotor protection.

**Quality in detail**

It is in the important details where the motto "made by ebm-papst" comes into its own: Consistent adherence to development and design processes and a targeted commitment to quality along the entire process chain are the foundation for the fans' above-average service life. 100.000 hours and above are now possible.
The no-compromise ebm-papst quality assurance spans over all process levels – from the choice of materials and the use of carefully selected, certified suppliers, from the production of parts up to final assembly. These details combine to result in reliable fan products with an above-average service life.

**ErP guidelines**

All products with power consumption between 125 W and 500 kW are subject to the European "Energy-related Products Directive" (ErP) for improving energy efficiency, with the first stage coming into force from 2013 and the second as of 2015. Thanks to ground-breaking GreenTech EC technology, all of our fans and motors in these performance classes already exceed the ErP Directive today.

# Tailor-made to meet your special requirements

***Practice-oriented: Fans – customised and intelligent***

*ebm-papst has always developed customer-specific intelligent fans which meet the exact requirements of the application. We provide a wide range of standard fan types, in many sizes and designs; with intelligent motor features, monitoring and control functions as well as special designs for use under extreme conditions. They are all based on the standard type fans which you will find in this catalogue. Special fan types for your application can be produced in economical batch sizes. Our expert engineers will assist you in selecting the right configuration.*

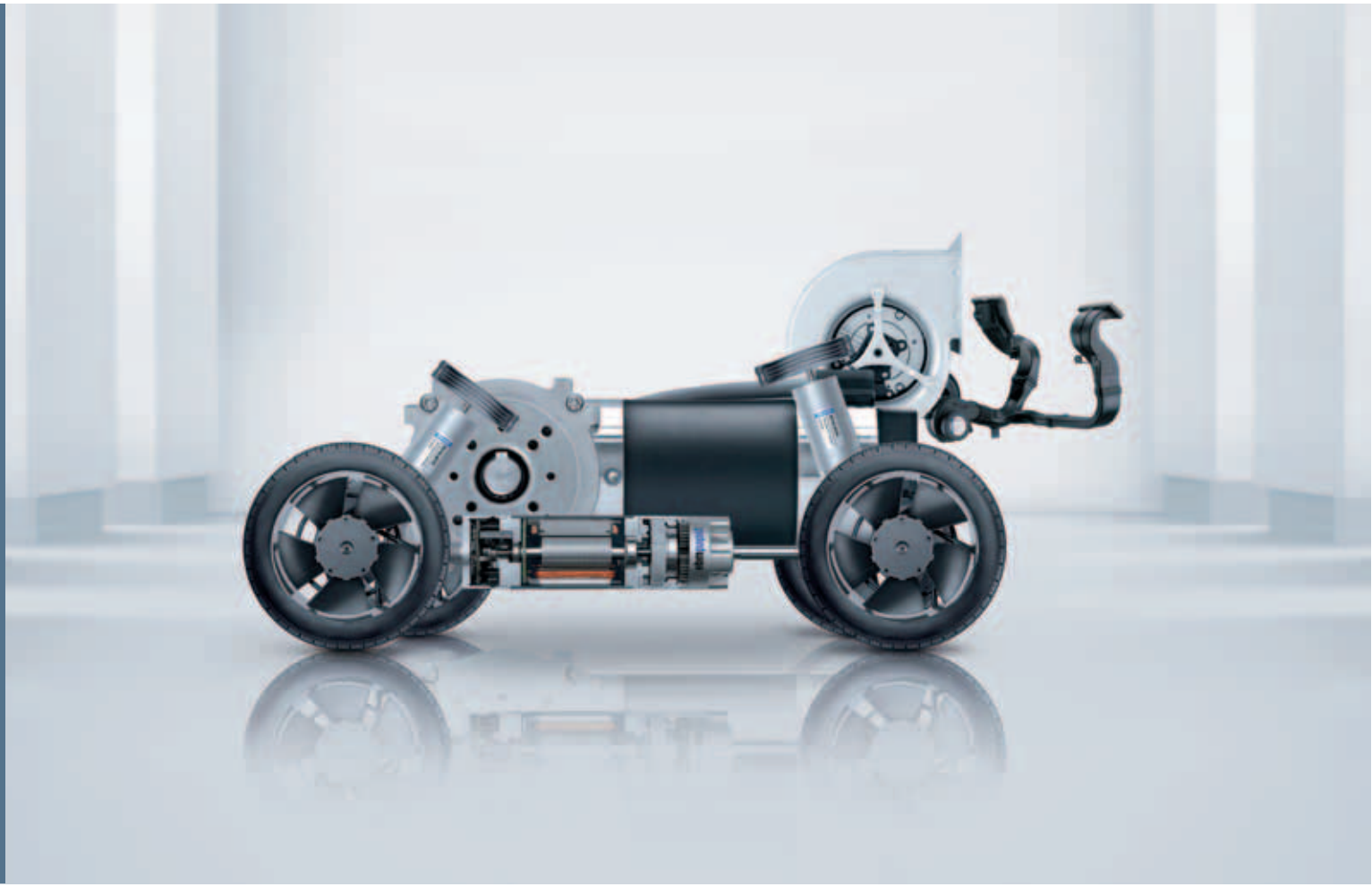

**Innovation at its best:**
Vario-Pro® with “intelligence inside”. Its programmed intelligence thanks to customer-specifically configured software modules makes the cooling of electronics even more economical and flexible. For example, temperature-dependent speed profiles are possible with a number of freely selectable interpolation points. External speed settings and a variety of combinable alarm and tachometer functions can also be programmed. The digital motor management achieves high control accuracy.

**Higher type of protection for every type of application**
ebm-papst provides, on request, many fan series in versions which conform to the requirements of type of protection IP 54 and IP 68: Their stator and all electrical components are fully encapsulated. Stainless steel ball bearings can be used for operation in particularly aggressive media and use under extreme environmental conditions, thus providing additional reliability.

**Virtually everything is possible**
Regardless of your cooling and ventilation tasks, we develop the right solution and what is more, the most economical one. Based on the fans listed in this catalogue, well over 4000 different versions are available.

**Temperature-controlled fans**
Fans with temperature-controlled speed have particularly quiet cooling characteristics. Thanks to integrated IC technology, they adapt their speed to the current cooling requirements, which results in a drastic reduction of noise in most operating modes. A temperature sensor provides the fan with thermal information: either externally via a single lead or integrated into the hub of the fan.

**Speed setting via interfaces**
With a wide range of DC fans with separate control input, ebm-papst provides an alternative to the NTC-controlled types of fans. They are especially suitable for systems and units which already have standard interfaces for varying speed via internal switching and control circuits. The main applications are units which demand load-dependent individual speed profiles or systems with stand-by minimum cooling requirements and varied speed increase at varying power peaks.

**“Electronic tachometer” thanks to sensor signal**
Do you wish to be informed about the current fan speed at all times? ebm-papst has fans with an integrated “electronic tachometer” which registers the actual value of the fan speed. Via an integrated sensor, the fan generates speed-dependent signals which can be directly utilised. Depending on the number of poles of the motor, 2, 3 or 6 pulses per revolution are generated.

**Alarm signal for more safety**
If your application requires monitored fan operation, in addition to speed monitoring, ebm-papst also provides a multitude of varying alarm signals. Depending on the type of fan in question, the signal is either static, already evaluated or interface-compatible.
The alarm signal output provides reliable longterm monitoring and a status signal if critical operating conditions evolve.

**S-Force**
The new measure of things!
When you need to provide extremely fast, powerful and efficient cooling for electronic components of all kinds, the generation of S-Force high-performance fans finishes first: in air performance, pressure build-up and technology. Extremely efficient drives and optimised aerodynamics form the core technology of the S-Force fans, which we offer in both an axial and brand-new centrifugal model.

**S-Panther**
S-Panther power delivered quietly. Wherever there is need for power and reduced noise, fans from the S-Panther range are the right solution. A strong pressure saddle curve at optimum air flow provides the power of a real big cat.

# Optional special versions

(see chapter DC fans - specials)

*In the catalogue, a text box in the upper right corner provides information on the special designs which are technically possible in the fan range.*
*Please note that these special versions are not possible for all voltages and speeds, and not in all combinations.The special versions are designed for specific customers and projects and are not usually available off the shelf.*

*Possible special designs are depicted on the catalogue page.*

**Speed signal /2, /12**
The fan uses a separate wire to output information about its speed, and thus about the speed of the rotor. For technical details, please refer to page 164 ff.

**Go / No-go alarm /37, /39**
The fan uses a separate wire to output a static signal when it is stationary, thus providing information about whether or not the rotor is turning. For technical details, please refer to page 171 f.

**Alarm with limit speed /17, /19**
If one of the speeds defined in the fan electronics is not met, the fan conveys via a static signal that the set limit speed has not been met. For technical details, please refer to page 168 ff.

**External temperature sensor**
A NTC resistor (negative temperature coefficient) is attached to the fan via a separate wire and the fan changes its speed depending on the temperature on the NTC. For technical details, please refer to page 174.

**Internal temperature sensor**
In this case, the NTC is integrated into the fan and the fan changes its speed depending on the temperature at the NTC. For technical details, please refer to page 174.

**PWM control input**
The speed of the fan can be changed via a pulse-width-modulated signal. This signal is applied to a specially provided wire. For technical details, please refer to page 175.

**Analogue control input**
The speed of the fan can be changed via a control voltage. This control voltage is applied to a specially provided wire. For technical details, please refer to page 175.

**Multi-option control input**
The fan has a control input that the user can trigger either using a PWM signal, an analogue signal or a resistor. For technical details, please refer to page 176.

**Protection against moisture**
Protection for the fan's electronics against moisture and condensation. For technical details, please refer to page 177.

**Type of protection IP 54 / IP 68**
Protection of motor and PCB board against splashed water and humidity. For technical details, please refer to page. 177.

**Protection against salt fog**
Protection of fan against the damaging effects of salt fog. For technical details, please refer to page 177.

**Direction of rotation**
On many variants, the direction of rotation can be changed via a control input.

# Types of fans and their function

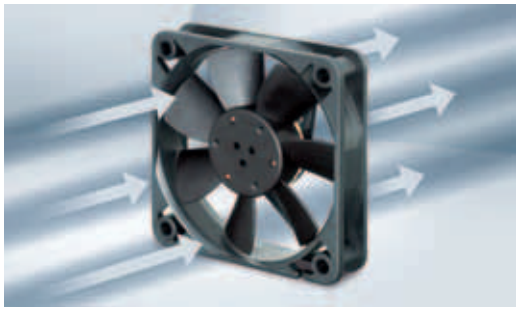

**Axial fans:**

**High air flow with medium to relatively high pressure build-up**

The air flow in axial fans, whose impeller is similar to that of a propeller, is conducted to a great extent parallel to the axis of rotation, in other words in the axial direction. Axial fans with free air delivery at zero static pressure have the lowest power input that rises with increasing back pressure. Axial fans for cooling of electronic equipment are mostly equipped with external housing and an electric motor integrated into the fan hub. This compact design allows space-saving accommodation of all devices; the flange is equipped with mounting holes.

**Diagonal fans:**

**High flow rate at relatively high pressure build-up**

At first glance diagonal fans only differ slightly from axial fans. Intake is axial, whereas exhaust is diagonal. Due to the conical shape of the wheel and housing, the air is pressurised more. In direct comparison with axial fans of the same size and comparable performance, these fans are distinguished by the lower operating noise at high pressures.

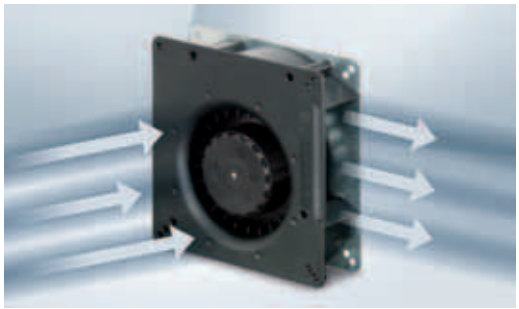

**Centrifugal fans:**

**High pressure build-up at limited flow rate**

Many of the cooling problems that occur can be optimally solved by axial and/or diagonal fans. If, for example, the required cooling air has to be conducted at an angle of 90° or if even high pressure is necessary, centrifugal fans are more effective. For your application, ebm-papst offers not only complete centrifugal fans but also motor/impeller combinations without external housing.

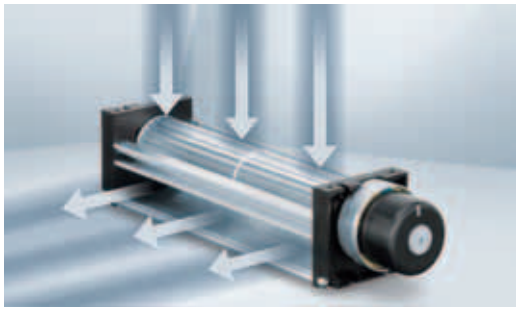

**Tangential fans:**

**High flow rate at low pressure**

Tangential fans are used above all-, for large-surface air flow in devices. The air flows through the roller-shaped impellers twice in the radial direction: in the intake area from the outside to the inside and in the outflow area from the inside to the outside. Whirls form in the roller due to the vanes which guarantee a steady flow of air through the impeller.

# Selecting the correct fan

**1. Dissipated energy**

A large amount of the energy consumed by electrical and electronic devices is converted into heat. In selecting the correct fan, therefore, it is important to determine the dissipated energy that must be removed. The electrical power consumption of the unit to be cooled, often represents a suitable value for this purpose.

**2. Permissible temperature rise**

The air flow which the selected fan is required to generate, is determined by the dissipated energy and the permissible rise (ΔT) of the cooling air flow (from entry to exit of the device to be cooled). The max. allowable ΔT depends greatly on the temperature sensitivity of the individual device components.

ΔT = 5K means e.g. that the average air flow leaving the device to be cooled may only be 5°C warmer than the ambient temperature (a large volume of air is required for this purpose). A lower air flow rate is sufficient if a higher temperature difference (e.g. ΔT = 20K), can be tolerated.

**3. Required cooling air flow**

- In the below diagram a horizontal line is drawn from the dissipated enery to intersect with the selected ΔT line.
- Read down from this point to obtain the required value for the cooling air flow. The diagram is based on the following formula:

$$\dot{V}\,[m^3/h] \approx 3 \cdot \frac{Pv\,[w]}{\Delta T\,[K]}$$

**4. Optimum operating range**

The required fan, however, must also be able to deliver a suitable static pressure increase Δpf, in order to force the cooling air through the device. A fan must therefore be selected that provides the required air flow performance within its optimum operating range (see also the air performance curves under technical data).

**5. Fan selection**

If the requirements of an application are fulfilled by more than one fan, the noise level, space requirements, economy and ambient conditions will assist in making the final choice.

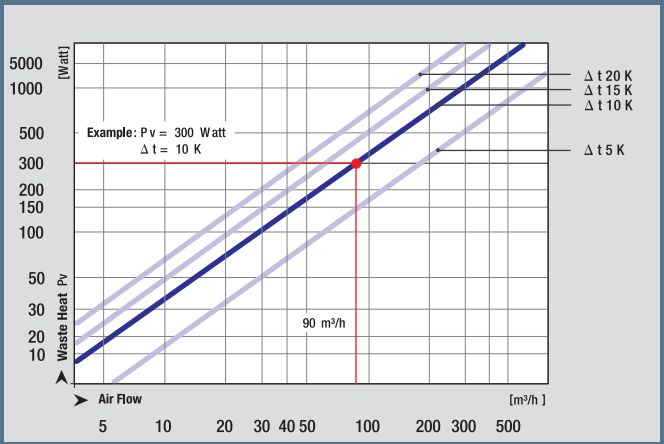


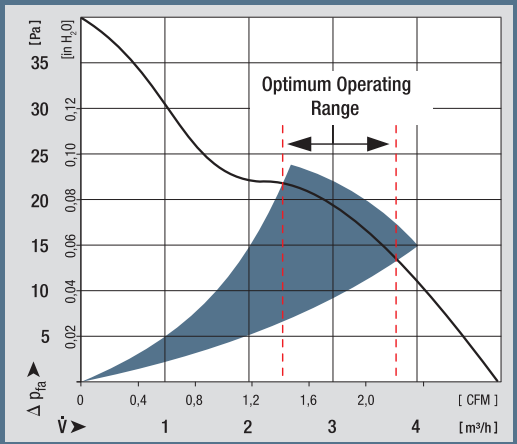




ebmpapst

# Fan installation

**Intake or exhaust side installation**

Under ideal conditions, the operating point is represented as the intersection between the fan and loss curves, regardless of whether the fan is positioned at the air intake or exhaust side of the device. In addition to ensuring the required flow rate, several additional aspects must be considered for determining an appropriate fan concept.
The intake air currents of a fan are mainly laminar, comprising nearly the entire suction area. By contrast, the exhaust air of a fan is generally turbulent, while it flows on a preferred direction, e.g. axial for an axial fan. The turbulences of the exhaust intensify the heat transfer from components within the air currents, so that mounting the fan at the air intake side of the device is recommended for cooling and heating. Mounting the fan at the device intake is also advantageous because the fan will not be subjected to the dissipated heat of the device. Therefore, it operates at low ambient temperatures and has a higher life expectancy.

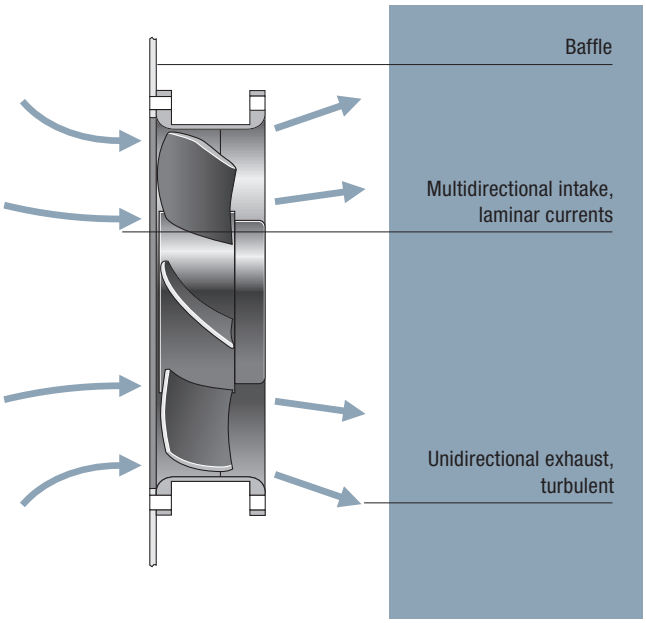


**Information on installation**

When a fan is operated for the first time in an application, the user may have noticed that the flow rate in the device was lower than expected. What is the reason for this?

- The values stated in this catalogue were determined under optimum, constant and comparable measurement conditions.
- Ideal mounting conditions under which free air intake and exhaust are present are seldom feasible in practice. Quite frequently the fans must be mounted in close proximity to other components or cabinet panels. As a consequence, the intake and exhaust currents may be restricted, causing the air flow to diminish and the noise level to increase. Fans are particularly sensitive to obstructions which are positioned directly in front of the output cross section as they often cause an increase in tonal noise.

**Our advice:** The distance between the fan and adjacent components should be at least equal to the installation depth of the fan.

**Accident prevention**

The turning rotor and the high speeds that are sometimes involved mean that our fan products carry an inherent risk of injury. They may only be operated after correct installation and with suitable protective facilities (e.g. with a guard grille). More information can be found in the internet at: **www.ebmpapst.com/safety**

# Connection instructions for S-Force fans

***Special features of S-Force fans***

*The S-Force series is the most powerful product series on the market. S-Force stands for the highest innovation in motor technology, fluid mechanics and electronics. The one-of-a-kind power density of the products requires special attention to the application at the customer's facility.*

**Service life**

Due to the high currents in the fans, the load on the electrolyte capacitors is greater, which reduces the service life of the capacitor. As a larger or additional capacitor cannot be housed in the fan, the capacitor must be housed in the supply line.
If the power pack of the application has a corresponding capacitor, in some cases it may be possible to omit the external capacitor.

| Fan | Capacitor required |
|---|---|
| **S-Force axial** | |
| 8200 / 3200 JH3-JH4 | no |
| 4100 NH3 / NH4 / NH5 / NH6 | no |
| 4100 NH7 / NH8 | yes |
| 5300 / 5300 TD | no |
| 6300 / 6300 TD | no |
| 2200 FTD | no |
| **S-Force centrifugal** | |
| RET 97 TD | yes |
| RER 120 TD | yes |
| RER 133 TD | no |
| RER 160 NTDHH / RG 160 NTDHH | yes |
| REF 175 TD | no |
| RER 175 TD | no |
| RER 190 TD / RG 190 TD | no |
| RER 220 TD / RG 220 TD | no |
| RER 225 TDM / RG 225 TDM | no |
| RER 225 TD / RG 225 TD | no |

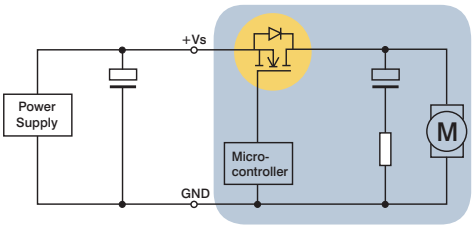


Recommended measure: Additional external capacitor (thus must be installed as close to the fan as possible < 30 cm).

**Recommended capacitors**

We recommend using the following capacitors from Rubycon:
24 VDC:
50 ZL 680 µF; 12,5 mm x 30 mm or
50 ZLH 680 µF 12,5 mm x 30 mm

48 VDC:
100 YXG 470 µF; 16 mm x 35,5 mm or
100 ZLH 470 µF 16 mm x 31,5 mm

Other capacitors with equal or greater capacitance and equal or lower serial resistance can also be used.
ebm-papst St. Georgen offers the following capacitors ex stock:
24 VDC: 1000 µF / 50 V, 16 mm x 25 mm
Art. No.: 992 0345 000 (LZ 354)

48 VDC: 680 µF / 100 V, 18 mm x 40 mm
Art. No. : 992 0355 000 (LZ 355)

# Service life

***Service life data from ebm-papst St. Georgen***

*Our fans catalogue gives three different values for the service life of each product. The first column usually states the service life $L_{10}$ at 40°C. the second column usually states the service life $L_{10}$ at $T_{max}$. Exceptions are marked in the column headings. The third column states the new value, life expectancy $L_{10IPC}$ (40 °C).*

| Sound power level | Sintec sleeve bearings / Ball bearings | Power consumption | Nominal speed | Temperature range | Service life $L_{10}$ (40 °C) ebm-papst Standard | Service life $L_{10}$ ($T_{max}$) ebm-papst Standard | Life expectancy $L_{10IPC}$ (40 °C) see page 17 | Curve |
|---|---|---|---|---|---|---|---|---|
| Bel(A) | □ / ■ | Watts | RPM | °C | Hours | Hours | | |
| 5,2 | ■ | 1,8 | 5 900 | -20...+70 | 85 000 / 42 500 | 142 500 | | ① |
| 5,4 | ■ | 1,5 | 6 300 | -20...+70 | 85 000 / 42 500 | 142 500 | | ② |

Example of the service life figures on the catalogue page.

**Service life $L_{10}$ (40 °C) and $L_{10}$ ($T_{max}$)**

The values given in the first two columns have been derived from intensive, in-house service life endurance tests, in which our products are operated in various positions at 40°C and 70°C until they fail. A fan is deemed to have failed when it deviates from its defined air flow and speed values, or when the operating noise becomes noticeable. Such tests can take several years before a representative number of failures have been registered, and even today, some fans are still in the process of endurance testing, even though they began tests in the 1980s. These fans are proof of the legendary "made by ebm-papst" reliability.

Test results are presented in a diagram and the service life of the product $L_{10}$ at the temperature tested is determined on the basis of the Weibull distribution.

These tests have given us years of experience in the way various design parameters and temperatures can affect the service life of a product. Data for service life at various temperatures for new products can be stated with a very high degree of precision on the basis of tests, product specifications and of commonalities in the design of the product.

**New: Life expectancy $L_{10IPC}$ (40 °C)**

The new third service life column states the expected service life $L_{10IPC}$ . This information is based on the international norm IPC 9591. Again here, the foundations for the service life values are our service life endurance tests at high ambient temperatures. The service life at temperatures below the test temperatures is calculated using fixed factors. This method produces much higher service life values, especially at room temperature (see diagram on right).

**Summary:**

The life span calculations have been carried out to the best of our knowledge and are based on experience gained by ebm-papst. The specified $L_{10}$ (40 °C), $L_{10}$ ($T_{max}$) and $L_{10IPC}$ (40 °C) values all allow statements to be made about the theoretical calculated service life under certain assumptions. The values determined here are extrapolations from our own service life tests and from statistical variables. In the respective customer applications, different influences may occur which cannot be included in the calculations due to their complexity. The service life information is explicitly not a guarantee of service life, but strictly a theoretical quality figure.

Fans in an endurance test cabinet at ebm-papst St. Georgen.
1500 fans are operated in temperature cabinets until they fail.

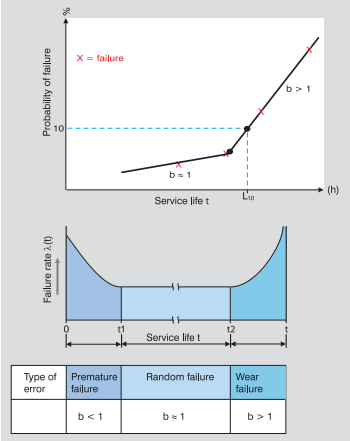


Bathtub curve and Weibull distribution.

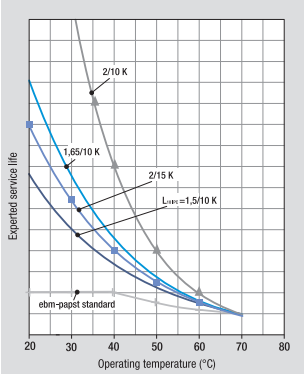


Example of the influence of factors from various manufacturers on the expected service life.

# Definitions

**Nominal voltage** (Volts)
The voltage at which the nominal values (the tabular values listed in this catalogue) were determined. The fan operation for DC fans is not limited to the nominal voltage. Fan speed and fan performance can vary according to the permissible voltage range that is specified on the nameplate of each fan. Be aware here that this is not a pulsed or modulated DC voltage.

**Frequency** (Hz)
ebm-papst AC fans are made for operating frequencies of 50 Hz or 60 Hz. Their technical data alter accordingly.

**Air flow** [m³/h]
The air performance of the fan in free air operation, i.e. the fan blows into the free space without static pressure build-up.

**Fan curves**
The fan curves are determined in accordance with DIN ISO 5801 specifications on a dual-chamber test stand with intake-side measurement. This measurement technique closely approximates the operating conditions experienced in typical applications for fans and yields realistic performance curves. The curves apply to an air density of $\rho = 1.2$ kg/m³, corresponding to an air pressure of 1013 mbar at 20 °C. Variations in air density affect pressure generation but not the flow rate. The pressure generated at other air densities may be estimated with the formula $\Delta\rho 2 = \Delta\rho 1\ (\rho 2 / \rho 1)$. The nominal speed values, air flow and power input listed in the table were measured in free air operation with horizontal shaft at an ambient temperature of 20 +5 °C, air density $\rho = 1.2$ kg/m³ after a warm-up period of 5 min.

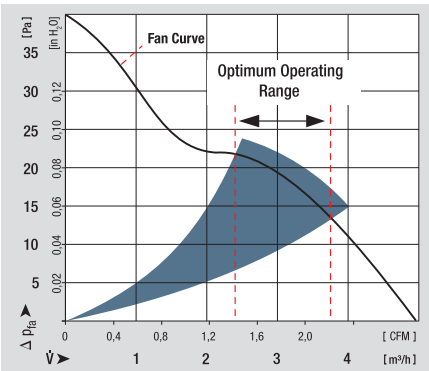


**Optimum operating range**
During operation, fans are required to produce an air flow with a simultaneous increase of pressure. These operating conditions are described in the section "Optimum Operating Range". The optimum operating range is therefore always indicated in this catalogue in the shaded area. In this range the fans operate best with respect to efficiency and noise level. Within this optimum operating range the noise level only fluctuates insignificantly.

**Noise** [dB(A), Bel(A)]

**1. Sound pressure level – dB(A)**
Noise ratings of the fan in free air operation, i.e. at maximum flow rate.

**2. Sound power level – Bel(A) / dB(A)**
Extent of the overall sound radiation of the fan. The sound power level is determined in the optimum operating range.

**PAPST Sintec® sleeve bearings**
A particularly efficient bearing system with excellent qualities:
– Very precise, large sintered bearings
– Low running noise
– High service life expectancy
– Insensitive to shock and vibration

**Ball bearings**
Precision ball bearings for particularly high ambient temperatures and high service life expectancy.

**Input power** [Watts]
Input performance of the fan motor when operating free blowing at nominal voltage. Depending on the operating condition in the application, the power input may be higher.

**Temperature range** [°C]
The permissible ambient temperature range within which the fan can be expected to run continuously.

**Service life** [h]

**Service life $L_{10}$ at 40 °C and $T_{max}$**
Standard figures for service life at ebm-papst. These two temperatures are based on intensive, in-house endurance tests and on the experience more than 60 years developing fans.

**Life expectancy $L_{10IPC}$ (40 °C)**
Information calculated in line with the norm IPC 9591. Data based on the internal expected service life at 70°C, more optimistically extrapolated to 40°C.

**We expressly state that none of the information or data in this catalogue is to be construed as a guarantee or warranty of properties.**

**Unit conversion**

| **Air flow** | **Pressure** |
|---|---|
| 1cfm = 1,7 m³/h | 1Pa = 1x10⁻⁵ bar |
| 1l/s = 3,6 m³/h | 1 inch $H_2O$ = 249 Pa |
| 1l/min = 0,06 m³/h | 1 mm $H_2O$ = 9,81 Pa |

Subject to technical alterations.
Our products are not designed for use in the aerospace industry!
German and international patents, registered designs and utility models.
ebm-papst is a registered trademark of ebm-papst Mulfingen GmbH & Co. KG.
PAPST, SINTEC, VARIOFAN and Vario-Pro are registered trademarks of ebm-papst St. Georgen GmbH & Co. KG.

# Type code

## 3-digit DC axial fan e.g. 412 FM

**Housing dimensions (W x H x D)**

| Value | Edge dimensions (W x H) | Installation depth (D) |
|---|---|---|
| 2 | 25 x 25 mm | 8 mm |
| **4** | **40 x 40 mm** | **10 / 20 / 25 / 28 mm** |
| 5 | 50 x 50 mm | 15 mm |
| 6 | 60 x 60 mm | 15 / 25 / 32 mm |
| 7 | 70 x 70 mm | 15 mm |

**Operating voltage**

| Value | Nominal voltage |
|---|---|
| **2** | **12 V** |
| 4 | 24 V |
| 5 | 5 V |
| 8 | 48 V |

4 1 2 F M

**Motor and housing version**

| Value | Version |
|---|---|
| **1** | **4xx fan, 10 / 20 / 25 / 28 mm (D)** |
| 1 | 6xx fan, 15 / 25 / 32 mm (D) |
| 2 | 25 / 28 mm (D) |
| 3 | 63x fan, 25 mm (D) |
| 5 | 2xx fan, 8 mm (D) |

**Options** (various versions possible)

| | |
|---|---|
| A | Analogue speed control input (input voltage: 0…5 / 0...10 V DC) |
| D | Reinforced flange corners with through-holes (Series 44xx F) |
| | Constant speed control independent from operating voltage |
| E | Economy fan with round flange |
| **F** | **Flat construction / frequency-modulated signal** |
| G | Sleeve bearing |
| H | High speed |
| HH | Further increased speed |
| H3-H8 | Additional further increased speeds |
| | (H8 - maximum fan speed) |
| I | Integrated temperature sensor (NTC behaviour, i.e. thermistor) |
| J | Jet characteristic / rigid curve |
| L | Low speed |
| **M** | **Medium speed** |
| ML | Between low and medium speed |
| N | Standard or basic speed (only DC fans) |
| O | Multi-option speed control input (analogue or PWM signal) |
| P | PWM speed control input (pulse-width modulated signal) |
| R | Moisture protection coating |
| | Circuit board and winding (IP 20), optional stainless steel ball bearing |
| S | Speed signal (additional wires for hall signal, obsolete technology) |
| T | External temperature sensor (NTC behaviour, i.e. thermistor) |
| TD | Turbo drive (extremely powerful 3-phase motor) |
| U | Environmentally friendly fan (min. IP 54) |
| V / VP | VARIOFAN |
| W | Additional wires (standard length 310 mm) |
| X | Mounting bore hole 3.7 mm |
| -xxx | Variant number |

## 4-digit DC axial fan, e.g. 4312 GM

**Housing dimensions (W x H x D)**

| Value | Edge dimensions (W x H) | Installation depth (D) |
|---|---|---|
| 2 | Ø 220 x 200 mm | 51 mm |
| 3 | 92 x 92 mm | 25 / 32 / 38 mm |
| **4** | **119 x 119 mm** | **25 / 32 / 38 mm** |
| 5 | 127 x 127 mm | 38 mm |
| 5 | 135 x 135 mm | 38 mm |
| 5 | 140 x 140 mm | 51 mm |
| 6 | Ø 172 mm | 51 mm |
| 6 | Ø 172 x 150 / 160 mm | 51 mm |
| 7 | Ø 150 mm | 38 / 55 mm |
| 8 | 80 x 80 mm | 25 / 32 / 38 mm |

**Connection type and direction of rotation**

| Value | Connection type | Direction of rotation |
|---|---|---|
| **1** | **Wires, length = 310 mm** | |
| 5 | Wires, length = 310 mm | |
| 6 | Plug, 2.8 x 0.8 mm | Counter-clockwise (CCW) |
| 7 | Plug, 2.8 x 0.8 mm | Clockwise (CW) |
| 8 | Plug, 2.8 x 0.5 mm | Counter-clockwise (CCW) |
| 9 | Plug, 2.8 x 0.5 mm | Clockwise (CW) |

4 3 1 2 G M

**Motor and housing version**

| Value | Version |
|---|---|
| 1 | 38 mm (D) |
| 2 | 38 mm (D) |
| **3** | **32 mm (D)** |
| 4 | 25 / 38 / 51 mm (D) |

**Operating voltage**

| Value | Nominal voltage |
|---|---|
| **2** | **12 V** |
| 4 | 24 V |
| 6 | 36 V |
| 8 | 48 V |

**Options** (various versions possible)

| | |
|---|---|
| A | Analogue speed control input (input voltage: 0…5 / 0...10 V DC) |
| D | Reinforced flange corners with through-holes (Series 44xx F) |
| | Constant speed control independent from operating voltage |
| DV | Diagonal Venturi fan |
| E | Economy fan with round flange |
| F | Flat construction / frequency-modulated signal |
| **G** | **Sleeve bearing** |
| H | High speed |
| HH | Further increased speed |
| H3-H8 | Additional further increased speeds |
| | (H8 - maximum fan speed) |
| I | Integrated temperature sensor (NTC behaviour, i.e. thermistor) |
| J | Jet characteristic / rigid curve |
| L | Low speed |
| **M** | **Medium speed** |
| ML | Between low and medium speed |
| N | Standard or basic speed (only DC fans) |
| O | Multi-option speed control input (analogue or PWM signal) |
| P | PWM speed control input (pulse-width modulated signal) |
| R | Moisture protection coating |
| | Circuit board and winding (IP 20), optional stainless steel ball bearing |
| S | Speed signal (additional wires for hall signal, obsolete technology) |
| T | External temperature sensor (NTC behaviour, i.e. thermistor) |
| TD | Turbo drive (extremely powerful 3-phase motor) |
| U | Environmentally friendly fan (min. IP 54) |
| V / VP | VARIOFAN |
| W | Additional wires (standard length 310 mm) |
| X | Mounting bore hole 3.7 mm |
| -xxx | Variant number |

All dimensions in millimetres [mm].

# Type code

## DC centrifugal fan e.g. RER 160-28/12 N

**Options** (various versions possible)

| | |
|---|---|
| A | Analogue speed control input (input voltage: 0…5 / 0...10 V DC) |
| D | Reinforced flange corners with through-holes (Series 44xx F) |
| | Constant speed control independent from operating voltage |
| E | Economy fan with round flange |
| F | Flat construction / frequency-modulated signal |
| G | Sleeve bearing |
| H | High speed |
| HH | Further increased speed |
| H3-H8 | Additional further increased speeds |
| | (H8 - maximum fan speed) |
| I | Integrated temperature sensor (NTC behaviour, i.e. thermistor) |
| J | Jet characteristic / rigid curve |
| L | Low speed |
| M | Medium speed |
| ML | Between low and medium speed |
| **N** | **Standard or basic speed (only DC fans)** |
| O | Multi-option speed control input (analogue or PWM signal) |
| P | PWM speed control input (pulse-width modulated signal) |
| R | Moisture protection coating |
| | Circuit board and winding (IP 20), optional stainless steel ball bearing |
| S | Speed signal (additional wires for hall signal, obsolete technology) |
| T | External temperature sensor (NTC behaviour, i.e. thermistor) |
| TD | Turbo drive (extremely powerful 3-phase motor) |
| U | Environmentally friendly fan (min. IP 54) |
| V / VP | VARIOFAN |
| W | Additional wires (standard length 310 mm) |
| X | Mounting bore hole 3.7 mm |
| -xxx | Variant number |

**Type** — Housing and fan impeller versions

| Type | Housing | Impeller blade design |
|---|---|---|
| RE | None | Non-curved, no direction of rotation set |
| REF | None | Forwards/backwards-curved impeller blades, flat |
| **RER** | **None** | **Backwards-curved impeller blades** |
| RET | None | Forwards-curved impeller blades |
| RG | Square | Forwards/backwards-curved impeller blades |
| RL | Round | Forwards-curved impeller blades |
| RLF | Round | Forwards/backwards-curved impeller blades, flat |
| RV | Round | Forwards-curved impeller blades |

**Height fan impeller blade**

R E R 1 6 0 - 2 8 / 1 2 N

**Diameter fan impeller**

**Operating voltage**

| Value | Nominal voltage |
|---|---|
| **/12** | **12 V** |
| /14 | 24 V |
| /18 | 48 V |

## Tangential blower e.g. QG 030-148/12

**Housing dimensions (W x H)**

| Value | Edge dimensions (W x H) | Impeller length | Total length |
|---|---|---|---|
| **148** | **48 x 50 mm** | **148 mm** | **201 mm** |
| 198 | 48 x 50 mm | 198 mm | 258 mm |
| 303 | 48 x 50 mm | 303 mm | 363 mm |
| 353 | 48 x 50 mm | 353 mm | 413 mm |

**Type** — Housing and fan impeller versions

| Type | Housing | Impeller blade design |
|---|---|---|
| **QG** | **Round** | **Compressor drum** |

Q G 0 3 0 - 1 4 8 / 1 2

**Diameter fan impeller**

**Operating voltage**

| Value | Nominal voltage |
|---|---|
| **/12** | **12 V** |
| /14 | 24 V |

All dimensions in millimetres [mm].

# Type code

## 4-digit GreenTech EC compact fans axial e.g. ACi 4420 HH

A C i 4 4 2 0 H H

### Housing dimensions (W x H x D)

| Value | Edge dimensions (W x H) | Installation depth (D) |
|---|---|---|
| 1 | Ø 98,5 mm | 130 mm |
| 3 | 92 x 92 mm | 38 mm |
| **4** | **119 x 119 mm** | **25 / 32 / 38 mm** |
| 6 | Ø 172 | 51 mm |
| 8 | 80 x 80 mm | 32 mm |

### Operating voltage

| Value | Nominal voltage | Frequency | Design |
|---|---|---|---|
| 0 | 115 / 230 V | 50 / 60 Hz | Wide voltage range input (85-265 V AC) |
| 1 | 115 V | 50 Hz | |
| **2** | **230 V** | **50 Hz** | |

### Basic design

| Value | Design |
|---|---|
| AC | DC basic fan with integrated AC/DC power supply unit |
| **ACi** | **EC technology (electronics completely integrated)** |

### Motor and housing version

| Value | Version |
|---|---|
| 0 | 130 mm (D) |
| 1 | 51 mm (D) |
| 2 | 38 / 51 mm (D) |
| 3 | 32 mm (D) |
| **4** | **25 / 38 mm (D)** |

### Bearing type and insulation class

| Value | Bearing type | Insulation class |
|---|---|---|
| **0** | **Ball bearing** | **E** |

### Options (various versions possible)

| | |
|---|---|
| A | Analogue speed control input (input voltage: 0…5 / 0...10 V DC) |
| D | Reinforced flange corners with through-holes (Series 44xx F) Constant speed control independent from operating voltage |
| E | Economy fan with round flange |
| F | Flat construction / frequency-modulated signal |
| G | Sleeve bearing |
| H | High speed |
| **HH** | **Further increased speed** |
| H3-H8 | Additional further increased speeds (H8 - maximum fan speed) |
| I | Integrated temperature sensor (NTC behaviour, i.e. thermistor) |
| J | Jet characteristic / rigid curve |
| L | Low speed |
| M | Medium speed |
| ML | Between low and medium speed |
| N | Standard or basic speed (only DC fans) |
| O | Multi-option speed control input (analogue or PWM signal) |
| P | PWM speed control input (pulse-width modulated signal) |
| R | Moisture protection coating Circuit board and winding (IP 20), optional stainless steel ball bearing |
| S | Speed signal (additional wires for hall signal, obsolete technology) |
| T | External temperature sensor (NTC behaviour, i.e. thermistor) |
| TD | Turbo drive (extremely powerful 3-phase motor) |
| U | Environmentally friendly fan (min. IP 54) |
| V / VP | VARIOFAN |
| W | Additional wires (standard length 310 mm) |
| X | Mounting bore hole 3.7 mm |
| -xxx | Variant number |

## AC axial fan e.g. 3950 L

3 9 5 0 L

### Housing dimensions (W x H x D)

| Value | Edge dimensions (W x H) | Installation depth (D) |
|---|---|---|
| **3** | **92 x 92 mm** | **25 / 38 mm** |
| 4 | 119 x 119 mm | 25 / 32 / 38 mm |
| 5 | 127 x 127 mm | 38 mm |
| 5 | 135 x 135 mm | 38 mm |
| 5 | 140 x 140 mm | 51 mm |
| 6 | Ø 172 mm | 51 / 52 mm |
| 7 | Ø 150 mm | 55 mm |
| 7 | Ø 150 x 172 mm | 38 mm |
| 8 | 80 x 80 mm | 38 mm |
| 9 | 119 x 119 mm | 25 mm |

### Operating voltage

| Value | Nominal voltage | Frequency |
|---|---|---|
| 0 | 115 V | 60 Hz |
| 2 | 115 V | 60 Hz |
| 3 | 115 V | 60 Hz |
| 4 | 115 V | 50 Hz |
| **5** | **230 V** | **50 Hz** |
| 6 | 115 V / 230 V | 50 Hz / 60 Hz |
| 7 | 230 V | 50 Hz |
| 8 | 230 V | 60 Hz |
| 9 | 230 V | 60 Hz |

### Options (various versions possible)

| | |
|---|---|
| A | Air intake via struts (attachment bore ø) |
| E | Made by ebm-papst Mulfingen (6xxx, 7xxx range) or round flange |
| H | Speed signal 1 Impulses per 360 degrees (additional magnet sensor and hall sensor) |
| L | Low speed |
| M | Medium speed |
| N | Air intake via struts (ø mounting bore hole) |
| R | Moisture protection coating Circuit board and winding (IP 20), optional stainless steel ball bearing |
| S | Integrated temperature switch |
| T | Assembly bracket |
| U | Environmentally friendly fan (min. IP 54) |
| V | Air exhaust via struts |
| W | Additional wires (standard length 310 mm) |
| X | Mounting bore hole 3.7 mm |
| -xxx | Variant number |
| Z | Air exhaust via struts, reinforced flange corners with through-holes |

### Motor and housing version

| Value | Version |
|---|---|
| 4 | Shaded-pole motor, 55 mm (D) medium speed |
| 5 | Shaded-pole motor, 38 mm (D) medium / high speed |
| 6 | Shaded-pole motor, 38 mm (D) high speed |
| 7 | Shaded-pole motor, 38 mm (D) with assembly bracket |
| 8 | Shaded-pole motor, slow / medium speed |
| **9** | **Shaded-pole motor, 25 / 38 mm (D)** |

### Bearing type and insulation class

| Value | Bearing type | Insulation class |
|---|---|---|
| **0** | **Sleeve bearing** | **E** |
| 5 | Ball bearing | E |
| 6 | Ball bearing | F |
| 8 | Ball bearing | E |

All dimensions in millimetres [mm].

# Type code

## AC centrifugal fan e.g. RER 160-28/56 S

**Options** (various versions possible)

| | |
|---|---|
| A | Intake via bars |
| E | Made by ebm-papst Mulfingen (6xxx, 7xxx range) or round flange |
| H | Speed signal<br>1 Impulses per 360 degrees (additional magnet sensor and hall sensor) |
| L | Low speed |
| M | Medium speed |
| N | Fan intake via bars (O mounting bore hole) |
| R | Moisture protection coating<br>Circuit board and winding (IP 20), optional stainless steel ball bearing |
| **S** | **Integrated temperature switch** |
| T | Assembly bracket |
| U | Environmentally friendly fan (min. IP 54) |
| V | Air exhaust via bars |
| W | Additional wires (standard length 310 mm) |
| X | Mounting bore hole 3.7 mm |
| -xxx | Variant number |
| Z | Air exhaust via bars, reinforced flange joints with through-holes |

**Type** — Housing and fan impeller versions

| Type | Housing | Impeller blade design |
|---|---|---|
| RE | None | Non-curved, no direction of rotation set |
| REF | None | Forwards/backwards-curved impeller blades, flat |
| **RER** | **None** | **Backwards-curved impeller blades** |
| RET | None | Forwards-curved impeller blades |
| RG | Square | Forwards/backwards-curved impeller blades |
| RL | Round | Forwards-curved impeller blades |
| RLF | Round | Forwards/backwards-curved impeller blades, flat |
| RV | Round | Forwards-curved impeller blades |

Height fan impeller blade

R E R 1 6 0 - 2 8 / 5 6 S

Diameter fan impeller

**Operating voltage**

| Value | Nominal voltage | Frequency |
|---|---|---|
| /00 | 115 V | 60 Hz |
| /06 | 115 V | 60 Hz |
| /50 | 230 V | 50 Hz |
| **/56** | **230 V** | **50 Hz** |

## DC centrifugal fan e.g. R2E 190-AO 26-05

Note: This type code specifies fans from ebm-papst Mulfingen and can be used to clearly identify and order them:

**Type** — Housing and fan impeller versions

| | |
|---|---|
| A | Axial fan |
| S | Axial fan with safety grille |
| W | Axial fan with wall ring |
| V | Axial combination |
| **R** | **Centrifugal fan, one-sided intake** |
| G | Centrifugal blower, one-sided intake (with scroll housing) |
| B | Centrifugal fan, double-sided intake |
| G | Centrifugal blower, double-sided intake (with scroll housing) |
| K | Centrifugal combination |

Diameter fan impeller

Mechanical design code

Mechanical variants code

R 2 E 1 9 0 - A O 2 6 - 0 5

**Number of poles (AC)**

| | |
|---|---|
| **2** | **2-pole** |

**Number of cores (DC/EC)**

| | |
|---|---|
| 1 | 1-phase/core |
| 3 | 3-phase/core |

**Motor type**

| | |
|---|---|
| D | Three-phase motor |
| **E** | **One-phase motor with operating capacitor** |
| G | DC/EC motor |

Electrical design code

All dimensions in millimetres [mm].

wob

GREEN TECH

Quiet but powerful.

Our new compact fan in the 420J range is a particularly quiet and energy-efficient DC fan. Compared to its predecessors it uses 70 % less power and is up to 5 dB(A) quieter, and it nonetheless achieves an airflow of 38 m³/h and a pressure build-up of up to 175 Pa in the saddle area – all squeezed in to just 40 x 40 x 28 mm. It works efficiently even in harsh environmental conditions. The ideal choice for IT servers, routers or compact frequency converters and welding inverters. For more information, visit: **www.ebmpapst.com**

ebmpapst

The engineer's choice

# DC axial fans

DC axial fan overview 27
DC axial fans / DC diagonal fans 31

# DC axial fans

*Technical information*

**Range of fans**
ebm-papst offers you the widest full product line of DC axial and diagonal fans: From 25 mm to 280 mm in size. Every single type of fan can be optimally integrated in the respective device concept. The highly economical brushless motor technology of these fans provides a unique variety of intelligent innovations that can be realised today at prices that would have been unthinkable just a few years ago.

**Electronic protection against reverse polarity**
ebm-papst DC fans have electronically commutated drives with electronic protection against reverse polarity. The electronics are conveniently located in the fan hub.

**Product life expectancy**
A distinctive feature of DC fan technology is the convincingly high product life expectancy. Thanks to the excellent efficiency of the brushless drives, the thermal load of the bearings is reduced, thus considerably increasing the life expectancy of the fans.

**Type of protection**
DC fans with sleeve and ball bearings are powered by class E insulated motors. All ebm-papst fans conform to the requirements of type of protection IP 20. Fans conforming to IP 54 / IP 68 and special types of protection are also available.

**Voltage range**
Many of our DC fans can be operated on voltages that are up to 50% lower and 25% higher than their nominal voltage (see Voltage range in the technical tables). This enables the air performance to be adapted to the cooling requirements and allows the noise to be reduced, even if the fan does not have a control input.

**Closed-loop speed control and monitoring**
Closed-loop speed control and function monitoring are becoming increasingly important in many applications. ebm-papst offers many fans in the standard design with a control input and open collector speed signal.

**S-Force**
The new S-Force fans with their extremely high blower capacity of up to 950 $m^3/h$ and pressure build-up of up to 1200 pascals are capable of dealing with the extreme heat load. If needed, these fans can produce up to 100% more output under full load and they work with a much broader delivery bandwidth than current models. This makes them ideal for equipment and systems with a high density of components. Thanks to intelligent motor features, they can be individually adapted for any application. S-Force fans are available in 5 standard dimensions.

**S-Panther**
S-Panther power delivered quietly. Wherever there is need for power and reduced noise, fans from the S-Panther range are the right solution. A strong pressure saddle curve at optimum air flow provides the power of a real big cat.

# Axial fans for DC operation

## Overview of air performance

| Dimensions | Series | Air flow | | Page |
|---|---|---|---|---|
| mm | | m³/h | | |
| 25 x 8 | 250 | 2,3...4,6 | | 31 |
| 40 x 10 | 400 F | 6...9 | | 32 |
| 40 x 20 | 400 | 10...13,5 | | 33 |
| 40 x 28 | 420 J | 24...38 | NEW | 34 |
| 50 x 15 | 500 F | 11...20 | | 35 |
| 60 x 15 | 600 F | 19...33 | | 36 |
| 60 x 25 | 620 | 21...67 | | 37 |
| 60 x 25 | 630 | 40...44 | | 38 |
| 60 x 25 | 600 N | 21...56 | | 39 |
| 60 x 25 | 600 N VARIOFAN | 16...41 | | 40 |
| 60 x 32 | 600 J | 70...82 | | 41 |
| 70 x 15 | 700 F | 28...44 | | 42 |
| 80 x 25 | 8450 | 32...117 | | 43 |
| 80 x 25 | 8400 N | 33...79 | | 44 |
| 80 x 25 | 8400 N VARIOFAN | 20...58 | | 45 |
| 80 x 32 | 8300 | 32...80 | | 46 |
| 80 x 38 | 8200 J | 132...222 | | 47 |
| 92 x 25 | 3400 N | 61...102 | | 48 |
| 92 x 25 | 3400 N VARIOFAN | 44...84 | | 49 |
| 92 x 32 | 3300 | 56...107 | | 50 |
| 92 x 32 | 3300 N | 56...133 | NEW | 51 |
| 92 x 38 | 3200 J | 130...280 | | 52 |
| 92 x 38 | 3250 J | 145...270 | NEW | 53 |
| 119 x 25 | 4400 F | 94...170 | | 54 |
| 119 x 25 | 4400 FN | 200...225 | | 55 |
| 119 x 32 | 4300 | 95...204 | | 56 |
| 119 x 32 | 4300 VARIOFAN | 65...170 | | 57 |

Subject to alternations

# Axial fans for DC operation

## Overview of air performance

| Dimensions | Series | Air flow | Page |
|---|---|---|---|
| mm | | m³/h | |
| □ 119 x 38 | 4400 | 100...285 | 58/59 |
| □ 119 x 38 | 4100 N | 160...237 | 60 |
| □ 119 x 38 | 4100 NHH..NH6 | 260...440 | 61 |
| □ 119 x 38 | 4100 NH7..NH8 | 500...570 | 62 |
| □ 119 x 38 | DV 4100 | 280 | 63 |
| □ 127 x 38 | 5200 N | 187...340 | 64 |
| □ 127 x 38 | DV 5200 | 270...320 | 65 |
| □ 135 x 38 | 5100 N | 260 | 66 |
| □ 140 x 51 | 5300 | 340 | 67 |
| □ 140 x 51 | 5300 TD | 410...670 | 68 |
| Ø 150 x 38 | 7100 N | 308...360 | 69 |
| Ø 150 x 55 | 7200 N | 360 | 70 |
| 172x160x52 | 6100 N | 350 | 71 |
| Ø 172 x 51 | 6300 | 395...545 | 72 |
| Ø 172 x 51 | 6300 TD | 600...930 | 73 |
| 172x160x51 | 6300 TD | 710...930 | 74 |
| Ø 172 x 51 | DV 6300 | 630...1100 NEW | 75 |
| 172x150x51 | 6400 | 350...480 | 76 |
| 172x150x51 | 6400 TD Turbofan | 90...900 | 77 |
| 172x160x51 | DV 6400 | 530 | 78 |
| 172x160x51 | DV 6400 TD Turbofan | 100...680 | 79 |
| 220x200x51 | 2200 FTD | 790...1220 | 80 |
| □ 225 x 80 | 2200 TD | 1000 | 81 |
| □ 225 x 80 | K1G 200 | 1020...1245 | 82 |
| □ 225 x 89 | K3G 200 | 725...905 | 83 |
| Ø 250 | W1G 250 | 2070 | 84 |
| Ø 300 | *1G 300 | 2320...2345 | 86 |

Subject to alternations

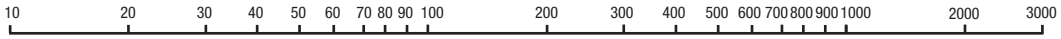




ebmpapst

# Axial fans for DC operation

## Overview of technically feasible designs

| | Series | Dimensions | VDE, UL, CSA | Simtec sleeve bearings/ball bearings | Speed signal | Go / No-go alarm | Alarm with limit speed | External temperature sensor | Internal temperature sensor | PWM control input | Analogue control input | Multi-option control input | Humidity protection | IP >= IP 54 | IP >= IP 68 | Salt fog protection | Reversible direction of rotation | Page |
|---|---|---|---|---|---|---|---|---|---|---|---|---|---|---|---|---|---|---|
| | **Axial fans** | | | | | | | | | | | | | | | | | |
| | **Series** | **mm** | | | | | | | **OPTIONAL** | | | | | | | | | **p.** |
| | 250 | 25 x 25 x 8 | ja | □ | • | – | – | – | – | – | – | – | • | – | – | – | – | 31 |
| | 400 F | 40 x 40 x 10 | ja | □ | • | • | – | – | – | – | – | – | • | – | – | – | – | 32 |
| | 400 | 40 x 40 x 20 | ja | □ | • | • | – | – | – | • | – | – | • | – | – | – | – | 33 |
| NEW | 420 J | 40 x 40 x 28 | ja | ■ | • | • | – | • | – | • | – | – | • | – | – | • | – | 34 |
| | 500 F | 50 x 50 x 15 | ja | □ | • | • | – | – | – | • | – | – | • | – | – | – | – | 35 |
| | 600 F | 60 x 60 x 15 | ja | □ | • | • | – | – | – | • | – | – | • | – | – | – | – | 36 |
| | 620 | 60 x 60 x 25 | ja | ■ | • | • | • | • | • | • | • | – | • | – | – | – | – | 37 |
| | 630 | 60 x 60 x 25 | ja | ■ | • | • | • | • | – | • | • | – | • | • | • | • | – | 38 |
| | 600 N | 60 x 60 x 25 | ja | □/■ | • | • | – | – | – | – | – | – | • | • | • | – | – | 39 |
| | 600 N VARIOFAN | 60 x 60 x 25 | ja | □/■ | • | • | – | • | • | – | – | – | • | – | – | – | – | 40 |
| | 600 J | 60 x 60 x 32 | ja | ■ | • | • | – | • | – | • | • | – | • | – | – | – | – | 41 |
| | 700 F | 70 x 70 x 15 | ja | □ | • | • | – | – | – | – | – | – | • | – | – | – | – | 42 |
| | 8450 | 80 x 80 x 25 | ja | □/■ | • | • | • | • | • | • | • | – | • | – | – | – | – | 43 |
| | 8400 N | 80 x 80 x 25 | ja | □/■ | • | • | • | • | • | • | • | – | • | • | • | – | – | 44 |
| | 8400 N VARIOFAN | 80 x 80 x 25 | ja | □ | • | • | – | • | • | – | – | – | • | – | – | – | – | 45 |
| | 8300 | 80 x 80 x 32 | ja | ■ | • | • | • | • | • | • | • | – | • | • | • | • | – | 46 |
| S-Force | 8200 J | 80 x 80 x 38 | ja | ■ | • | • | • | • | • | • | • | – | • | • | – | – | – | 47 |
| | 3400 N | 92 x 92 x 25 | ja | □/■ | • | • | • | • | • | • | • | – | • | • | • | – | – | 48 |
| | 3400 N VARIOFAN | 92 x 92 x 25 | ja | □ | • | • | – | • | • | – | – | – | • | – | – | – | – | 49 |
| | 3300 | 92 x 92 x 32 | ja | □/■ | • | • | • | • | • | • | • | – | • | • | • | • | – | 50 |
| NEW | 3300 N | 92 x 92 x 38 | ja | ■ | • | • | – | • | • | • | • | – | • | • | – | • | – | 51 |
| S-Force | 3200 J | 92 x 92 x 38 | ja | ■ | • | • | • | • | • | • | • | – | • | • | • | – | – | 52 |
| NEW S-Panther | 3250 J | 92 x 92 x 38 | ja | ■ | • | • | – | • | • | • | • | – | • | • | – | • | – | 53 |
| | 4400 F | 119 x 119 x 25 | ja | □/■ | • | • | • | • | • | • | • | – | • | – | – | – | – | 54 |
| | 4400 FN | 119 x 119 x 25 | ja | ■ | • | • | • | • | • | • | • | – | • | – | – | – | – | 55 |
| | 4300 | 119 x 119 x 32 | ja | □/■ | • | • | • | • | • | • | • | – | • | • | • | • | – | 56 |
| | 4300 VARIOFAN | 119 x 119 x 32 | ja | ■ | • | • | • | • | • | • | • | – | • | – | – | – | – | 57 |
| | Subject to alternations | | | | | | | | | | | | | | | | | |

* approvals-applied for
– not yet available
• available
□ Sleeve bearings
■ Ball bearings

Please note that these special versions are not possible for all voltages and speeds, and not in all combinations. The special versions are designed for specific customers and projects. As a rule they are not available off the shelf and are tied to minimum volumes.

Please consult your customer support representative about the feasibility of your special variant.

# Axial fans for DC operation

## Overview of technically feasible designs

| | Series | Dimensions | VDE, UL, CSA | Sintec sleeve bearings/ball bearings | Speed signal | Go / No-go alarm | Alarm with limit speed | External temperature sensor | Internal temperature sensor | PWM control input | Analogue control input | Multi-option control input | Humidity protection | IP >= IP 54 | IP >= IP 68 | Salt fog protection | Reversible direction of rotation | Page |
|---|---|---|---|---|---|---|---|---|---|---|---|---|---|---|---|---|---|---|
| | **Axial fans** | | | | | | | | | | | | | | | | | |
| | **Series** | **mm** | | | | | | | | **OPTIONAL** | | | | | | | | **p.** |
| | 4400 | 119 x 119 x 38 | ja | ■ | • | • | • | • | • | • | • | – | • | • | – | – | – | 58/59 |
| | 4100 N | 119 x 119 x 38 | ja | ▫/■ | • | • | • | • | • | • | • | – | • | • | • | • | – | 60 |
| S-Force | 4100 NH..NH6 | 119 x 119 x 38 | ja | ■ | • | • | • | • | • | • | • | – | • | • | • | • | – | 61 |
| S-Force | 4100 NH7..NH8 | 119 x 119 x 38 | ja | ■ | • | • | • | • | • | • | • | – | • | – | – | • | – | 62 |
| | DV 4100 | 119 x 119 x 38 | ja | ■ | • | • | • | • | • | • | • | – | • | • | • | • | – | 63 |
| | 5200 N | 127 x 127 x 38 | ja | ■ | • | • | • | • | • | • | • | – | • | • | • | • | – | 64 |
| | DV 5200 | 127 x 127 x 38 | ja | ■ | • | • | • | • | • | • | • | – | • | • | – | • | – | 65 |
| | 5100 N | 135 x 135 x 38 | ja | ■ | • | • | • | • | • | • | • | – | • | • | – | • | – | 66 |
| S-Force | 5300 | 140 x 140 x 51 | ja | ■ | • | • | • | • | • | • | • | – | • | • | – | • | – | 67 |
| S-Force | 5300 TD | 140 x 140 x 51 | ja | ■ | • | • | • | • | • | • | • | • | • | • | – | • | – | 68 |
| | 7100 N | Ø 150 x 38 | ja | ■ | • | • | • | • | • | • | • | – | • | • | • | • | – | 69 |
| | 7200 N | Ø 150 x 55 | ja | ■ | • | • | • | • | • | • | • | – | • | • | • | • | – | 70 |
| | 6100 N | 172 x 160 x 51 | ja | ■ | • | • | • | • | • | • | • | – | • | • | – | – | – | 71 |
| S-Force | 6300 | Ø 172 x 51 | ja | ■ | • | • | • | • | • | • | • | – | • | • | – | • | – | 72 |
| S-Force | 6300 TD | Ø 172 x 51 | ja | ■ | • | • | • | • | • | • | • | • | • | • | – | • | – | 73 |
| S-Force | 6300 TD | 172 x 160 x 51 | ja | ■ | • | • | • | • | • | • | • | • | • | • | – | • | – | 74 |
| NEW | DV 6300 | 172 x 160 x 51 | ja | ■ | • | • | • | • | • | • | • | • | • | • | – | • | – | 75 |
| | 6400 | 172 x 150 x 51 | ja | ■ | • | • | • | • | • | • | • | – | • | • | – | • | – | 76 |
| | 6400 TD Turbofan | 172 x 150 x 51 | ja | ■ | • | • | • | • | • | • | • | – | • | • | – | • | • | 77 |
| | DV 6400 | 172 x 160 x 51 | ja | ■ | • | • | • | • | • | • | • | – | • | • | – | • | – | 78 |
| | DV 6400 TD | 172 x 160 x 51 | ja | ■ | • | • | • | • | • | • | • | – | • | • | – | • | • | 79 |
| | 2200 FTD | Ø 200 x 51 | ja | ■ | • | • | • | • | • | • | • | • | • | • | – | • | – | 80 |
| S-Force NEW | 2200 TD | 225 x 225 x 80 | ja | ■ | • | • | • | • | • | • | • | • | • | • | – | – | – | 81 |
| | K1G 200 | 225 x 225 x 80 | ja | ■ | • | • | • | • | – | • | • | • | • | – | – | • | – | 82 |
| | K3G 200 | 225 x 225 x 89 | ja | ■ | • | • | • | • | – | • | • | • | • | – | – | • | – | 83 |
| | Subject to alternations | | | | | | | | | | | | | | | | | |

* approvals-applied for

– not yet available
• available

▫ Sleeve bearings
■ Ball bearings

Please note that these special versions are not possible for all voltages and speeds, and not in all combinations. The special versions are designed for specific customers and projects. As a rule they are not available off the shelf and are tied to minimum volumes.

Please consult your customer support representative about the feasibility of your special variant.

max. 4,6 m³/h

# DC axial fans

## Series 250 25 x 25 x 8 mm

- **Material:** Housing: GRP[1)] (PBT)
  Impeller: GRP[1)] (PA)
- **Direction of air flow:** Exhaust over struts
- **Direction of rotation:** Counter-clockwise, seen on rotor
- **Connection:** Via single wires AWG 28, TR 64
- **Mass:** 5 g

- **Possible special versions:**
  (See chapter DC fans - specials)
  - Speed signal
  - Protection against moisture

1) Fibreglass-reinforced plastic

| Nominal data | Air flow | Air flow | Nominal voltage | Voltage range | Sound pressure level | Sound power level | Sintec sleeve bearings / Ball bearings | Input power | Nominal speed | Temperature range | Service life $L_{10}$ (20 °C) ebm-papst Standard / Service life $L_{10}$ (60 °C) ebm-papst Standard | Life expectancy $L_{10IPC}$ (40 °C) see page 17 | Curve |
|---|---|---|---|---|---|---|---|---|---|---|---|---|---|
| **Type** | **m³/h** | **CFM** | **VDC** | **VDC** | **dB(A)** | **Bel(A)** | □ / ■ | **Watts** | **rpm** | **°C** | **Hours** | **Hours** | |
| 255 M | 2,3 | 1,2 | **5** | 4,5...5,5 | 5 | < 3 | □ | 0,2 | 6 500 | -10...+70 | 45 000 / 17 500 | 47 500 | ① |
| 255 N | 3,5 | 1,9 | **5** | 4,5...5,5 | 16 | < 3 | □ | 0,4 | 9 600 | -10...+70 | 40 000 / 15 000 | 42 500 | ② |
| 255 H | 4,6 | 2,6 | **5** | 4,5...5,5 | 23 | 4,4 | □ | 0,6 | 12 000 | -10...+55 | 35 000 / 15 000* | 37 500 | ③ |
| 252 N | 3,4 | 1,9 | **12** | 10...14 | 15 | < 3 | □ | 0,5 | 9 000 | -10...+70 | 40 000 / 15 000 | 42 500 | ② |
| 252 H | 4,6 | 2,6 | **12** | 10...14 | 23 | 4,4 | □ | 0,7 | 12 000 | -10...+55 | 35 000 / 15 000* | 37 500 | ③ |

Subject to alternations

* at 55 °C

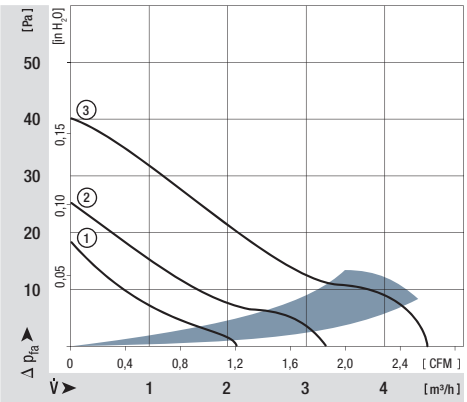


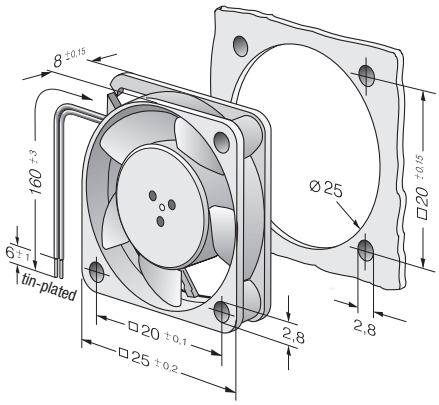

max. 9 m³/h

# DC axial fans

## Series 400 F 40 x 40 x 10 mm

- **Material:** Housing: GRP[1)] (PBT)
  Impeller: GRP[1)] (PA)
- **Direction of air flow:** Exhaust over struts
- **Direction of rotation:** Counter-clockwise, seen on rotor
- **Connection:** Via single wires AWG 28, TR 64
- **Highlights:** Some models are suitable for use at high ambient temperatures
- **Mass:** 17 g

- **Possible special versions:**
  (See chapter DC fans - specials)
  - Speed signal
  - Go / No-go alarm
  - Protection against moisture

1) Fibreglass-reinforced plastic

| Nominal data | Air flow | Air flow | Nominal voltage | Voltage range | Sound pressure level | Sound power level | Sintec sleeve bearings / Ball bearings | Input power | Nominal speed | Temperature range | Service life $L_{10}$ (20 °C) ebm-papst Standard / Service life $L_{10}$ (60 °C) ebm-papst Standard | Life expectancy $L_{10IPC}$ (40 °C) see page 17 | Curve |
|---|---|---|---|---|---|---|---|---|---|---|---|---|---|
| **Type** | **m³/h** | **CFM** | **VDC** | **VDC** | **dB(A)** | **Bel(A)** | □/■ | **Watts** | **rpm** | **°C** | **Hours** | **Hours** | |
| 405 F | 8 | 4,7 | **5** | 4,5...5,5 | 22,1 | 4,4 | □ | 0,7 | 5 400 | -20...+70 | 45 000 / 17 500 | 47 500 | ② |
| 405 FH | 9 | 5,3 | **5** | 4,5...5,5 | 26,0 | 4,6 | □ | 0,9 | 6 000 | -20...+70 | 45 000 / 17 500 | 47 500 | ③ |
| 412 FM | 6 | 3,5 | **12** | 10...14 | 17,0 | 3,8 | □ | 0,5 | 4 300 | -20...+70 | 45 000 / 17 500 | 47 500 | ① |
| 412 F | 8 | 4,7 | **12** | 10...14 | 22,1 | 4,4 | □ | 0,7 | 5 400 | -20...+70 | 45 000 / 17 500 | 47 500 | ② |
| 412 FH | 9 | 5,3 | **12** | 10...14 | 26,0 | 4,6 | □ | 0,8 | 6 000 | -20...+70 | 45 000 / 17 500 | 47 500 | ③ |
| 414 F | 8 | 4,7 | **24** | 20...28 | 22,1 | 4,4 | □ | 0,8 | 5 400 | -20...+70 | 45 000 / 17 500 | 47 500 | ② |
| 414 FH | 9 | 5,3 | **24** | 21,6...26,4 | 26,0 | 4,4 | □ | 0,9 | 6 000 | -20...+70 | 45 000 / 17 500 | 47 500 | ③ |
| Model with temperature range up to +85 °C. | | | | | | | | | | | | | |
| 412 FM-074 | 6 | 3,5 | **12** | 10...14 | 17,0 | 3,8 | □ | 0,4 | 4 300 | -20...+85 | 45 000 / 17 500 | 47 500 | ① |
| 412 F-130 | 8 | 4,7 | **12** | 10...14 | 22,1 | 4,4 | □ | 0,6 | 5 400 | -20...+85 | 45 000 / 17 500 | 47 500 | ② |
| 412 FH-132 | 9 | 5,3 | **12** | 10...14 | 26,0 | 4,6 | □ | 0,8 | 6 000 | -20...+85 | 45 000 / 17 500 | 47 500 | ③ |

Subject to alternations

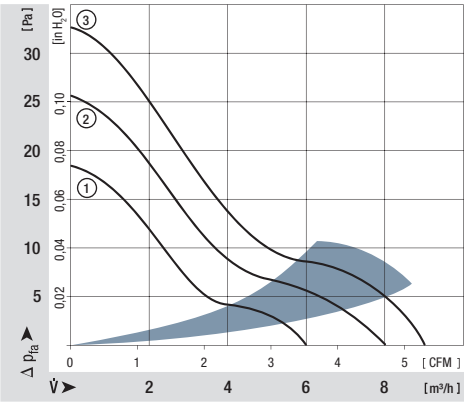


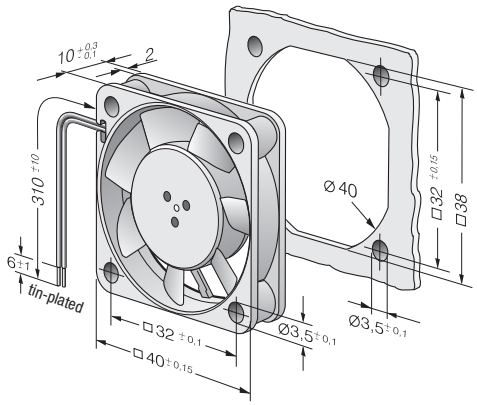




Guard grilles
from p. 238

ebmpapst

max. 13,5 m³/h

# DC axial fans

## Series 400 40 x 40 x 20 mm

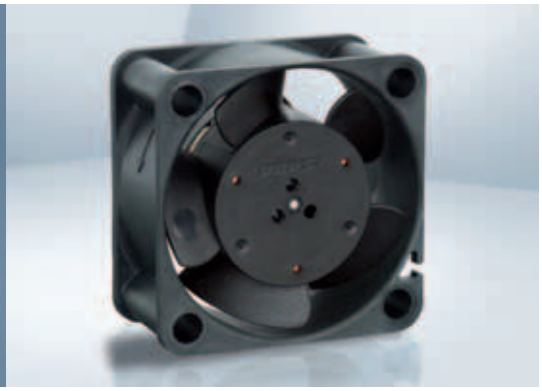

- **Material:** Housing: GRP[1)] (PBT)
  Impeller: GRP[1)] (PA)
- **Direction of air flow:** Exhaust over struts
- **Direction of rotation:** Counter-clockwise, seen on rotor
- **Connection:** Via single wires AWG 28, TR 64
- **Highlights:** Some models are suitable for use at high ambient temperatures
- **Mass:** 27 g

- **Possible special versions:**
  (See chapter DC fans - specials)
  - Speed signal
  - Go / No-go alarm
  - PWM control input
  - Protection against moisture

1) Fibreglass-reinforced plastic

| Nominal data | Air flow | Air flow | Nominal voltage | Voltage range | Sound pressure level | Sound power level | Sintec sleeve bearings Ball bearings | Input power | Nominal speed | Temperature range | Service life $L_{10}$ (20 °C) ebm-papst Standard / Service life $L_{10}$ (60 °C) ebm-papst Standard | Life expectancy $L_{10IPC}$ (40 °C) see page 17 | Curve |
|---|---|---|---|---|---|---|---|---|---|---|---|---|---|
| **Type** | **m³/h** | **CFM** | **VDC** | **VDC** | **dB(A)** | **Bel(A)** | □ / ■ | **Watts** | **rpm** | **°C** | **Hours** | **Hours** | |
| 405 | 10,0 | 5,9 | **5** | 4,5...5,5 | 18 | 3,8 | ■ | 0,9 | 6 000 | -20...+70 | 50 000 / 20 000 | 52 500 | ① |
| 412 | 10,0 | 5,9 | **12** | 10...14 | 18 | 3,8 | ■ | 0,8 | 6 000 | -20...+70 | 50 000 / 20 000 | 52 500 | ① |
| 412 H | 13,5 | 7,9 | **12** | 10...14 | 29 | 4,7 | ■ | 1,6 | 8 100 | -20...+60 | 45 000 / 17 500 | 47 500 | ② |
| 414 | 10,0 | 5,9 | **24** | 20...28 | 18 | 3,8 | ■ | 1,0 | 6 000 | -20...+70 | 50 000 / 20 000 | 52 500 | ① |
| 414 H | 13,5 | 7,9 | **24** | 20...26,5 | 29 | 4,7 | ■ | 1,7 | 8 100 | -20...+60 | 45 000 / 17 500 | 47 500 | ② |
| Model with temperature range up to +85 °C. | | | | | | | | | | | | | |
| 412-099 | 10,0 | 5,9 | **12** | 10...14 | 18 | 3,8 | ■ | 0,8 | 6 000 | -20...+85 | 50 000 / 20 000 | 52 500 | ① |

Subject to alternations

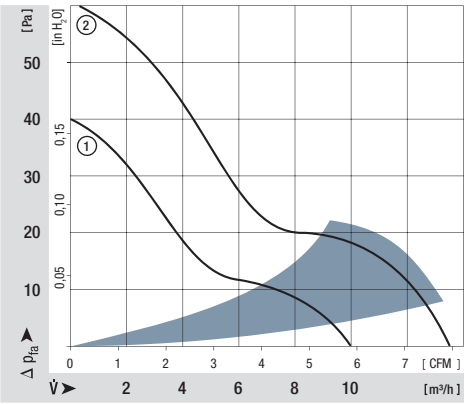


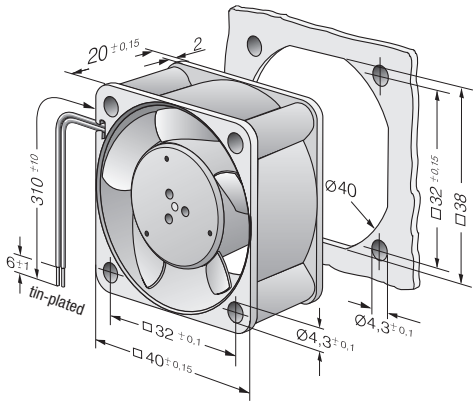

max. 38 m³/h

# DC axial fans

## Series 420 J 40 x 40 x 28 mm

- **Material:** Housing: GRP[1)] (PBT)
  Impeller: GRP[1)] (PA)
- **Direction of air flow:** Exhaust over struts
- **Direction of rotation:** Counter-clockwise, seen on rotor
- **Connection:** Via single wires AWG 28, UL 1061
- **Mass:** 45 g

- **Possible special versions:**
  (See chapter DC fans - specials)
  - Speed signal
  - Go / No-go alarm
  - External temperature sensor
  - PWM control input
  - Protection against moisture
  - Protection against salt fog

1) Fibreglass-reinforced plastic

| Nominal data | Air flow | Air flow | **Nominal voltage** | Voltage range | Sound pressure level | Sound power level | Sintec sleeve bearings / Ball bearings | Input power | Nominal speed | Temperature range | Service life $L_{10}$ (20 °C) ebm-papst Standard / Service life $L_{10}$ (60 °C) ebm-papst Standard | Life expectancy $L_{10IPC}$ (40 °C) see page 17 | Curve |
|---|---|---|---|---|---|---|---|---|---|---|---|---|---|
| **Type** | **m³/h** | **CFM** | **VDC** | **VDC** | **dB(A)** | **Bel(A)** | □/■ | **Watts** | **rpm** | **°C** | **Hours** | **Hours** | |
| 422 JM | 24 | 14,2 | **12** | 8...13,8 | 42 | 5,5 | ■ | 2,5 | 11 100 | -20...+70 | 75 000 / 37 500 | 127 500 | ① |
| 422 JN | 31 | 18,3 | **12** | 8...13,8 | 48 | 6,0 | ■ | 4,0 | 14 000 | -20...+70 | 67 500 / 35 000 | 115 000 | ② |
| 422 JH | 38 | 22,4 | **12** | 8...13,8 | 54 | 6,6 | ■ | 6,8 | 17 200 | -20...+70 | 60 000 / 30 000 | 102 500 | ③ |
| 424 JM | 24 | 14,2 | **24** | 16...28 | 42 | 5,5 | ■ | 2,7 | 11 100 | -20...+70 | 75 000 / 37 500 | 127 500 | ① |
| 424 JN | 31 | 18,3 | **24** | 16...28 | 48 | 6,0 | ■ | 4,2 | 14 000 | -20...+70 | 67 500 / 35 000 | 115 000 | ② |
| 424 JH | 38 | 22,4 | **24** | 16...26,4 | 54 | 6,6 | ■ | 7,1 | 17 200 | -20...+65 | 60 000 / 32 500 | 102 500 | ③ |

Subject to alternations

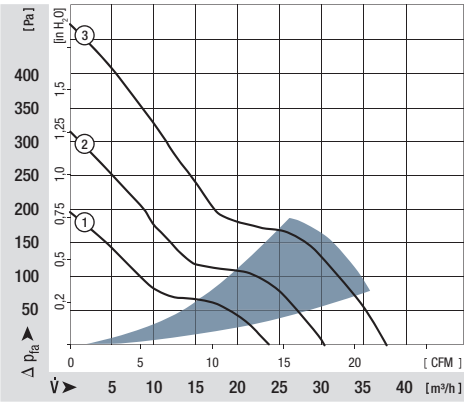


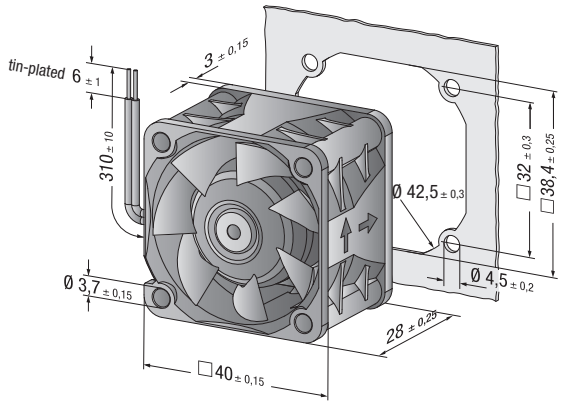




Guard grilles
from p. 238

ebmpapst

max. 20 m³/h

# DC axial fans

## Series 500 F 50 x 50 x 15 mm

- **Material:** Housing: GRP[1)] (PBT)
  Impeller: GRP[1)] (PA)
- **Direction of air flow:** Exhaust over struts
- **Direction of rotation:** Counter-clockwise, seen on rotor
- **Connection:** Via single wires AWG 28, TR 64
- **Highlights:** Some models are suitable for use at high ambient temperatures
- **Mass:** 27 g

- **Possible special versions:**
  (See chapter DC fans - specials)
  - Speed signal
  - Go / No-go alarm
  - PWM control input
  - Protection against moisture

1) Fibreglass-reinforced plastic

| Nominal data | Air flow | Air flow | Nominal voltage | Voltage range | Sound pressure level | Sound power level | Sintec sleeve bearings Ball bearings | Input power | Nominal speed | Temperature range | Service life $L_{10}$ (20 °C) ebm-papst Standard / Service life $L_{10}$ (60 °C) ebm-papst Standard | Life expectancy $L_{10IPC}$ (40 °C) see page 17 | Curve |
|---|---|---|---|---|---|---|---|---|---|---|---|---|---|
| **Type** | **m³/h** | **CFM** | **VDC** | **VDC** | **dB(A)** | **Bel(A)** | □ / ■ | **Watts** | **rpm** | **°C** | **Hours** | **Hours** | |
| 512 F | 20 | 11,8 | **12** | 10,8...13,2 | 30 | 4,5 | □ | 0,8 | 5 000 | -20...+70 | 50 000 / 20 000 | 52 500 | ② |
| 514 F | 20 | 11,8 | **24** | 21,6...26,4 | 30 | 4,5 | □ | 0,9 | 5 000 | -20...+70 | 50 000 / 20 000 | 52 500 | ② |
| Model with temperature range up to +85 °C. | | | | | | | | | | | | | |
| 512 FL-547 | 11 | 6,5 | **12** | 10,2...13,8 | 18 | 3,7 | □ | 0,4 | 3 000 | -20...+85 | 50 000 / 20 000 | 52 500 | ① |
| 512 F-532 | 20 | 11,8 | **12** | 10,8...13,2 | 30 | 4,5 | □ | 0,9 | 5 000 | -20...+85 | 50 000 / 20 000 | 52 500 | ② |

Subject to alternations

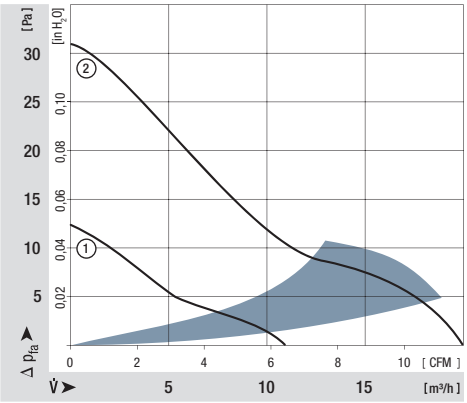


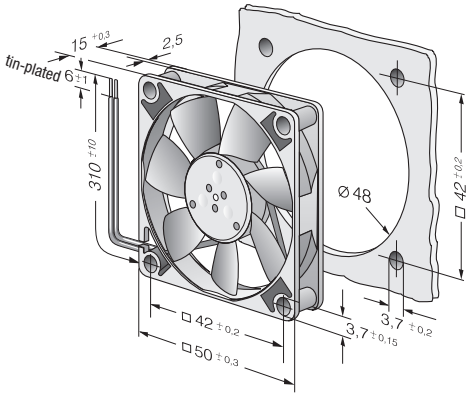

max. 33 m³/h

# DC axial fans

## Series 600 F 60 x 60 x 15 mm

- **Material:** Housing: GRP[1)] (PBT)
  Impeller: GRP[1)] (PA)
- **Direction of air flow:** Exhaust over struts
- **Direction of rotation:** Counter-clockwise, seen on rotor
- **Connection:** Via single wires AWG 28, TR 64
- **Highlights:** Some models are suitable for use at high ambient temperatures
- **Mass:** 30 g

- **Possible special versions:**
  (See chapter DC fans - specials)
  - Speed signal
  - Go / No-go alarm
  - PWM control input
  - Protection against moisture

1) Fibreglass-reinforced plastic

| Nominal data | Air flow | Air flow | Nominal voltage | Voltage range | Sound pressure level | Sound power level | Sintec sleeve bearings / Ball bearings | Input power | Nominal speed | Temperature range | Service life $L_{10}$ (20 °C) ebm-papst Standard / Service life $L_{10}$ (60 °C) ebm-papst Standard | Life expectancy $L_{10IPC}$ (40 °C) see page 17 | Curve |
|---|---|---|---|---|---|---|---|---|---|---|---|---|---|
| **Type** | **m³/h** | **CFM** | **VDC** | **VDC** | **dB(A)** | **Bel(A)** | □/■ | **Watts** | **rpm** | **°C** | **Hours** | **Hours** | |
| 605 F | 29 | 17,1 | **5** | 4,5...5,2 | 27 | 4,4 | □ | 1,1 | 4 000 | -20...+50 | 50 000 / 20 000 | 52 500 | ② |
| 612 FL | 19 | 11,2 | **12** | 11,5...13,2 | 16 | 3,6 | □ | 0,4 | 2 650 | -20...+70 | 50 000 / 20 000 | 52 500 | ① |
| 612 F | 29 | 17,1 | **12** | 10,8...13,2 | 27 | 4,4 | □ | 1,0 | 3 900 | -20...+70 | 50 000 / 20 000 | 52 500 | ② |
| 612 FH | 33 | 19,4 | **12** | 10,0...13,2 | 31 | 4,8 | □ | 1,5 | 4 500 | -20...+60 | 45 000 / 17 500 | 47 500 | ③ |
| 614 F | 29 | 17,1 | **24** | 21,6...26,4 | 27 | 4,4 | □ | 1,1 | 3 900 | -20...+70 | 50 000 / 20 000 | 52 500 | ② |
| 614 F/39 H-691 | 33 | 19,4 | **24** | 16...28 | 31 | 4,8 | □ | 1,4 | 4 500 | -20...+60 | 45 000 / 17 500 | 47 500 | ③ |
| Model with temperature range up to +80 / 85 °C. | | | | | | | | | | | | | |
| 612 FL-680 | 19 | 11,2 | **12** | 11,5...14 | 16 | 3,6 | □ | 0,5 | 2 650 | -20...+85 | 50 000 / 20 000 | 52 500 | ① |
| 612 F-637 | 29 | 17,1 | **12** | 10,8...12,6 | 27 | 4,4 | □ | 1,0 | 3 900 | -20...+80 | 50 000 / 20 000 | 52 500 | ② |

Subject to alternations

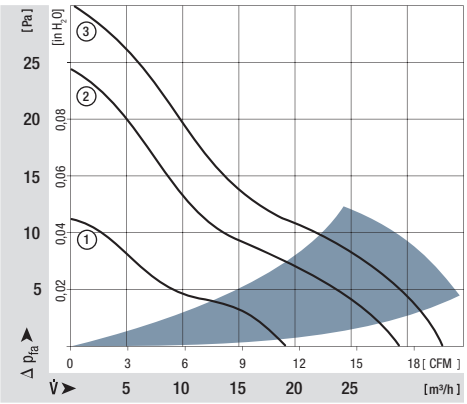


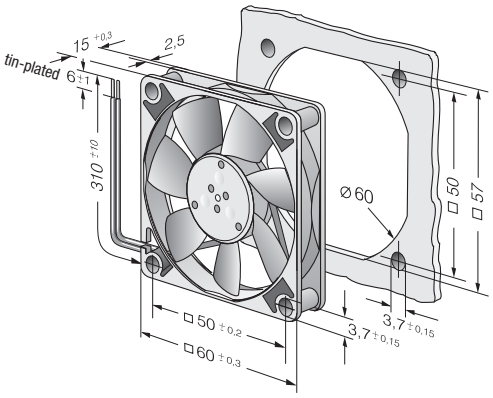




Guard grilles
from p. 238

ebmpapst

max. 67 m³/h

# DC axial fans

## Series 620 60 x 60 x 25 mm

- **Material:** Housing: GRP[1)] (PBT)
  Impeller: GRP[1)] (PA)
- **Direction of air flow:** Exhaust over struts
- **Direction of rotation:** Clockwise, seen on rotor
- **Connection:** Via single wires AWG 22, TR 64
- **Highlights:** Very low-noise motor
- **Mass:** 85 g

- **Possible special versions:**
  (See chapter DC fans - specials)
  - Speed signal
  - Go / No-go alarm
  - Alarm with limit speed
  - External temperature sensor
  - Internal temperature sensor
  - PWM control input
  - Analogue control input
  - Protection against moisture

1) Fibreglass-reinforced plastic

| Nominal data | Air flow | Air flow | Nominal voltage | Voltage range | Sound pressure level | Sound power level | Sintec sleeve bearings / Ball bearings | Input power | Nominal speed | Temperature range | Service life $L_{10}$ (40 °C) ebm-papst Standard / Service life $L_{10}$ ($T_{max}$) ebm-papst Standard | Life expectancy $L_{10IPC}$ (40 °C) see page 17 | Curve |
|---|---|---|---|---|---|---|---|---|---|---|---|---|---|
| **Type** | **m³/h** | **CFM** | **VDC** | **VDC** | **dB(A)** | **Bel(A)** | □ / ■ | **Watts** | **rpm** | **°C** | **Hours** | **Hours** | |
| 622 L | 21 | 12,4 | **12** | 8...15 | 20 | 3,7 | ■ | 0,5 | 3 200 | -20...+85 | 80 000 / 20 000 | 135 000 | ① |
| 622 M | 30 | 17,7 | **12** | 8...15 | 29 | 4,3 | ■ | 1,0 | 4 550 | -20...+75 | 77 500 / 30 000 | 127 500 | ② |
| 622 N | 40 | 23,5 | **12** | 8...15 | 35 | 4,7 | ■ | 1,9 | 6 100 | -20...+70 | 72 500 / 35 000 | 117 500 | ③ |
| 622 H | 46 | 27,1 | **12** | 8...15 | 39 | 5,1 | ■ | 2,3 | 6 850 | -20...+70 | 70 000 / 35 000 | 117 500 | ④ |
| 622 HH | 56 | 33,0 | **12** | 8...15 | 43 | 5,6 | ■ | 3,5 | 8 200 | -20...+70 | 65 000 / 32 500 | 110 000 | ⑤ |
| 622/2 H3P | 67 | 39,4 | **12** | 8...13,2 | 48 | 5,9 | ■ | 8,0 | 9 700 | -20...+60 | 52 500 / 32 500 | 87 500 | ⑥ |
| 624 L | 21 | 12,4 | **24** | 18...28 | 20 | 3,7 | ■ | 1,0 | 3 200 | -20...+70 | 80 000 / 40 000 | 135 000 | ① |
| 624 M | 30 | 17,7 | **24** | 12...28 | 29 | 4,3 | ■ | 1,5 | 4 550 | -20...+70 | 77 500 / 37 500 | 130 000 | ② |
| 624 N | 40 | 23,5 | **24** | 12...28 | 35 | 4,7 | ■ | 2,2 | 6 100 | -20...+70 | 72 500 / 35 000 | 117 500 | ③ |
| 624 H | 46 | 27,1 | **24** | 18...28 | 39 | 5,1 | ■ | 2,4 | 6 850 | -20...+70 | 70 000 / 35 000 | 117 500 | ④ |
| 624 HH | 56 | 33,0 | **24** | 18...28 | 43 | 5,6 | ■ | 3,6 | 8 200 | -20...+70 | 65 000 / 32 500 | 110 000 | ⑤ |
| 624/2 H3P | 67 | 39,4 | **24** | 18...28 | 48 | 5,9 | ■ | 7,0 | 9 700 | -20...+60 | 52 500 / 32 500 | 87 500 | ⑥ |
| 628 HH | 56 | 33,0 | **48** | 36...60 | 43 | 5,6 | ■ | 4,2 | 8 200 | -20...+70 | 65 000 / 32 500 | 110 000 | ⑤ |

Subject to alternations

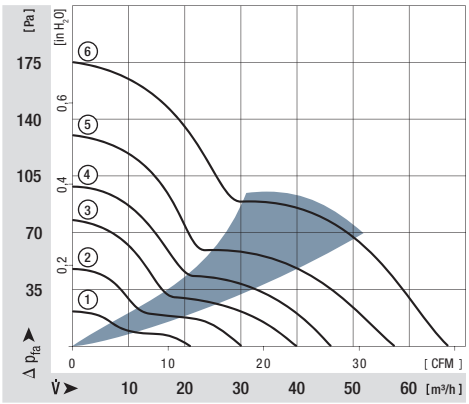


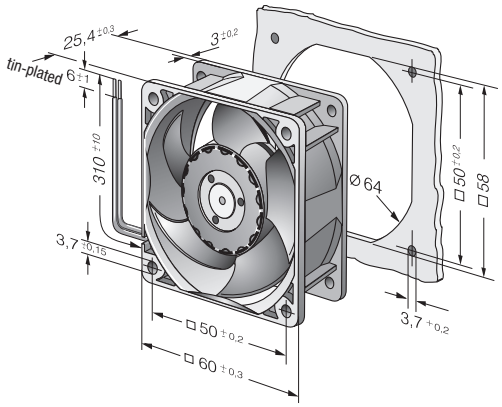

max. 44 m³/h

# DC axial fans

## Series 630 60 x 60 x 25 mm

- **Material:** Housing: GRP[1)] (PBT)
  Impeller: GRP[1)] (PA)
- **Direction of air flow:** Exhaust over struts
- **Direction of rotation:** Clockwise, seen on rotor
- **Connection:** Via single wires AWG 22, TR 64
- **Highlights:** Developed for applications with demanding environmental requirements
- **Mass:** 70 g

- **Possible special versions:**
  (See chapter DC fans - specials)
  - Speed signal
  - Go / No-go alarm
  - Alarm with limit speed
  - External temperature sensor
  - PWM control input
  - Analogue control input
  - Protection against moisture
  - Protection against salt fog
  - Type of protection: IP 54 / IP 68

1) Fibreglass-reinforced plastic

| Nominal data | Air flow | Air flow | **Nominal voltage** | Voltage range | Sound pressure level | Sound power level | Sintec sleeve bearings / Ball bearings | Input power | Nominal speed | Temperature range | Service life $L_{10}$ (40 °C) ebm-papst Standard / Service life $L_{10}$ ($T_{max}$) ebm-papst Standard | Life expectancy $L_{10IPC}$ (40 °C) see page 17 | Curve |
|---|---|---|---|---|---|---|---|---|---|---|---|---|---|
| **Type** | **m³/h** | **CFM** | **VDC** | **VDC** | **dB(A)** | **Bel(A)** | □/■ | **Watts** | **rpm** | **°C** | **Hours** | **Hours** | |
| 632 NU | 40 | 23,5 | **12** | 6...15 | 33 | 5,2 | ■ | 1,8 | 5 900 | -20...+70 | 85 000 / 42 500 | 142 500 | ① |
| 632/2 HPU | 44 | 25,9 | **12** | 10,8...13,2 | 35 | 5,4 | ■ | 1,5 | 6 300 | -20...+70 | 85 000 / 42 500 | 142 500 | ② |
| 634 NU | 40 | 23,5 | **24** | 12...30 | 34 | 5,1 | ■ | 1,6 | 5 900 | -20...+70 | 85 000 / 42 500 | 142 500 | ① |
| 638/2 HPU | 44 | 25,9 | **48** | 40...60 | 35 | 5,4 | ■ | 1,8 | 6 300 | -20...+70 | 85 000 / 42 500 | 142 500 | ② |

Subject to alternations

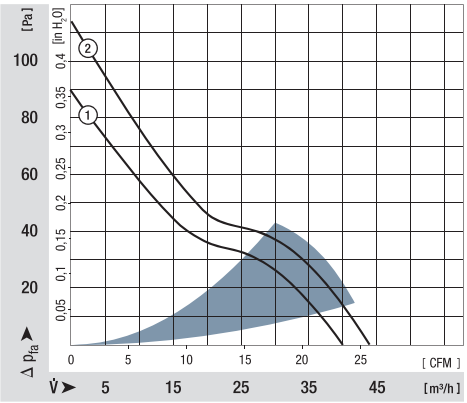


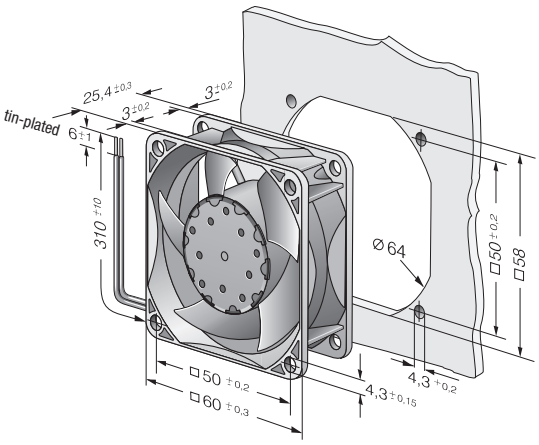




Guard grilles
from p. 238

ebmpapst

max. 56 m³/h

# DC axial fans

## Series 600 N 60 x 60 x 25 mm

- **Material:** Housing: GRP[1)] (PBT)
  Impeller: GRP[1)] (PA)
- **Direction of air flow:** Exhaust over struts
- **Direction of rotation:** Clockwise, seen on rotor
- **Connection:** Via single wires AWG 22, TR 64
- **Highlights:** Some models are suitable for use at high ambient temperatures until 85 °C
- **Mass:** 66 g

- **Possible special versions:**
  (See chapter DC fans - specials)
  - Speed signal
  - Go / No-go alarm
  - Protection against moisture
  - Type of protection: IP 54 / IP 68

1) Fibreglass-reinforced plastic

| Nominal data | Air flow | Air flow | Nominal voltage | Voltage range | Sound pressure level | Sound power level | Sintec sleeve bearings / Ball bearings | Input power | Nominal speed | Temperature range | Service life $L_{10}$ (40 °C) ebm-papst Standard / Service life $L_{10}$ ($T_{max}$) ebm-papst Standard | Life expectancy $L_{10IPC}$ (40 °C) see page 17 | Curve |
|---|---|---|---|---|---|---|---|---|---|---|---|---|---|
| Type | m³/h | CFM | VDC | VDC | dB(A) | Bel(A) | □ / ■ | Watts | rpm | °C | Hours | Hours | |
| 612 NGLE | 21 | 12,4 | **12** | 8...15 | 16 | 3,6 | □ | 0,6 | 2 500 | -20...+85 | 80 000 / 27 500 | 135 000 | ① |
| 612 NLE | 21 | 12,4 | **12** | 8...15 | 16 | 3,6 | ■ | 0,4 | 2 500 | -20...+85 | 80 000 / 27 500 | 135 000 | ① |
| 612 NGMLE | 25 | 14,7 | **12** | 8...15 | 19 | 3,9 | □ | 0,7 | 3 000 | -20...+80 | 80 000 / 32 500 | 135 000 | ② |
| 612 NMLE | 25 | 14,7 | **12** | 8...15 | 19 | 3,9 | ■ | 0,4 | 3 000 | -20...+85 | 80 000 / 27 500 | 135 000 | ② |
| 612 NGME | 35 | 20,6 | **12** | 8...15 | 28 | 4,6 | □ | 1,2 | 4 100 | -20...+75 | 80 000 / 35 000 | 135 000 | ③ |
| 612 NME | 35 | 20,6 | **12** | 8...15 | 28 | 4,6 | ■ | 0,8 | 4 100 | -20...+75 | 80 000 / 35 000 | 135 000 | ③ |
| 612 NN | 42 | 24,7 | **12** | 8...15 | 35 | 5,0 | ■ | 1,5 | 5 100 | -20...+70 | 70 000 / 35 000 | 117 500 | ④ |
| 612 NH | 43 | 25,3 | **12** | 8...15 | 37 | 5,3 | ■ | 1,8 | 5 600 | -20...+70 | 70 000 / 35 000 | 117 500 | ⑤ |
| 612 NHH-118 | 56 | 33,0 | **12** | 8...15 | 41 | 5,7 | ■ | 2,9 | 6 800 | -20...+70 | 60 000 / 30 000 | 102 500 | ⑥ |
| 614 NGL | 21 | 12,4 | **24** | 18...28 | 16 | 3,6 | □ | 1,0 | 2 500 | -20...+70 | 80 000 / 40 000 | 135 000 | ① |
| 614 NL | 21 | 12,4 | **24** | 18...28 | 16 | 3,6 | ■ | 0,8 | 2 500 | -20...+70 | 80 000 / 40 000 | 135 000 | ① |
| 614 NGML | 25 | 14,7 | **24** | 18...28 | 19 | 3,9 | □ | 1,2 | 3 000 | -20...+70 | 80 000 / 40 000 | 135 000 | ② |
| 614 NML | 25 | 14,7 | **24** | 18...28 | 19 | 3,9 | ■ | 1,0 | 3 000 | -20...+70 | 80 000 / 40 000 | 135 000 | ② |
| 614 NGM | 35 | 20,6 | **24** | 18...28 | 28 | 4,6 | □ | 1,7 | 4 100 | -20...+70 | 80 000 / 40 000 | 135 000 | ③ |
| 614 NM | 35 | 20,6 | **24** | 18...28 | 28 | 4,6 | ■ | 1,3 | 4 100 | -20...+70 | 80 000 / 40 000 | 135 000 | ③ |
| 614 NN | 42 | 24,7 | **24** | 18...28 | 35 | 5,0 | ■ | 1,8 | 5 100 | -20...+70 | 70 000 / 35 000 | 117 500 | ④ |
| 614 NH | 43 | 25,3 | **24** | 18...26 | 37 | 5,3 | ■ | 2,1 | 5 600 | -20...+70 | 70 000 / 35 000 | 117 500 | ⑤ |
| 614 NHH | 56 | 33,0 | **24** | 18...26 | 41 | 5,7 | ■ | 2,9 | 6 850 | -20...+70 | 60 000 / 30 000 | 102 500 | ⑥ |
| 614 NHH-119 | 56 | 33,0 | **24** | 18...28 | 41 | 5,7 | ■ | 2,9 | 6 850 | -20...+70 | 60 000 / 30 000 | 102 500 | ⑥ |
| 618 NM | 35 | 20,6 | **48** | 36...56 | 28 | 4,6 | ■ | 1,9 | 4 100 | -20...+70 | 80 000 / 40 000 | 135 000 | ③ |
| 618 NN | 42 | 24,7 | **48** | 36...56 | 35 | 5,0 | ■ | 2,1 | 5 100 | -20...+65 | 70 000 / 40 000 | 117 500 | ④ |

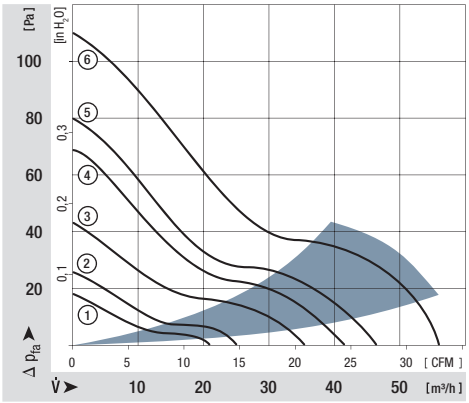


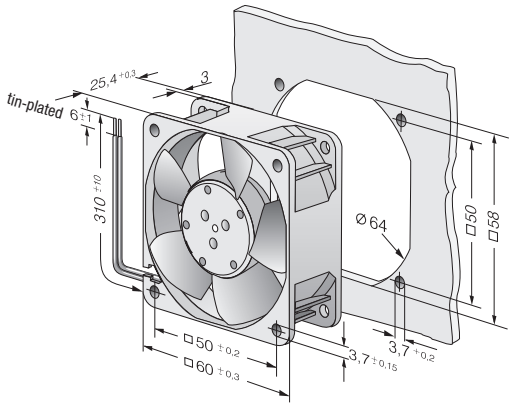

max. 41 m³/h

# DC axial fans

## Series 600 N VARIOFAN 60 x 60 x 25 mm

- **Material:** Housing: GRP[1)] (PBT)
  Impeller: GRP[1)] (PA)
- **Direction of air flow:** Exhaust over struts
- **Direction of rotation:** Clockwise, seen on rotor
- **Connection:** Via single wires AWG 22, TR 64
- **Highlights:** Automatic speed adjustment with temperature sensor
- **Mass:** 66 g

- **Possible special versions:**
  (See chapter DC fans - specials)
  - Speed signal
  - Go / No-go alarm
  - External temperature sensor
  - Internal temperature sensor
  - Protection against moisture

1) Fibreglass-reinforced plastic

| | Nominal data | Air flow | Air flow | Nominal voltage | Voltage range | Sound pressure level | Sound power level | Sintec sleeve bearings / Ball bearings | Input power | Nominal speed | Temperature range | Service life $L_{10}$ (40 °C) ebm-papst Standard | Service life $L_{10}$ ($T_{max}$) ebm-papst Standard | Life expectancy $L_{10IPC}$ (40 °C) see page 17 | Curve |
|---|---|---|---|---|---|---|---|---|---|---|---|---|---|---|---|
| | Type | m³/h | CFM | VDC | VDC | dB(A) | Bel(A) | □/■ | Watts | rpm | °C | Hours | | Hours | |
| 30°C ▼ 55°C | 612 NGMI | 18 | 10,6 | 12 | 8...12,6 | 14 | 3,5 | □ | 1,3 | 2 150 | -20...+65 | 80 000 / 45 000 | | 135 000 | ① |
| | | 35 | 20,6 | | | 28 | 4,6 | | 1,7 | 4 100 | | | | | ② |
| 30°C ▼ 55°C | 612 NMI | 16 | 9,4 | 12 | 8...12,6 | 16 | 3,6 | ■ | 1,0 | 2 400 | -20...+65 | 80 000 / 45 000 | | 135 000 | ③ |
| | | 35 | 20,6 | | | 28 | 4,6 | | 1,4 | 4 100 | | | | | ④ |
| 30°C ▼ 55°C | 612 NGNI | 23 | 13,5 | 12 | 8...12,6 | 18 | 3,8 | □ | 1,7 | 2 900 | -20...+65 | 70 000 / 40 000 | | 117 500 | ⑤ |
| | | 41 | 24,1 | | | 35 | 5,0 | | 2,4 | 5 100 | | | | | ⑥ |
| 30°C ▼ 55°C | 612 NNI | 23 | 13,5 | 12 | 8...12,6 | 18 | 3,8 | ■ | 1,2 | 2 900 | -20...+65 | 70 000 / 40 000 | | 117 500 | ⑤ |
| | | 41 | 24,1 | | | 35 | 5,0 | | 1,5 | 5 100 | | | | | ⑥ |
| 30°C ▼ 55°C | 612 NGNV | 23 | 13,5 | 12 | 8...12,6 | 18 | 3,8 | □ | 1,7 | 2 900 | -20...+65 | 70 000 / 40 000 | | 117 500 | ⑤ |
| | | 41 | 24,1 | | | 35 | 5,0 | | 2,4 | 5 100 | | | | | ⑥ |

Subject to alternations

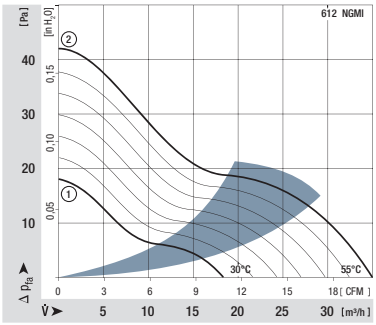


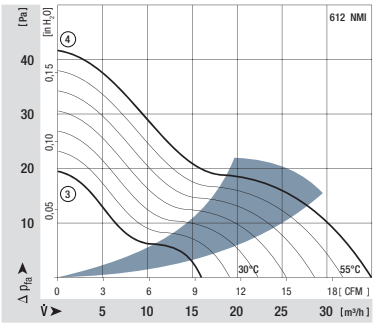


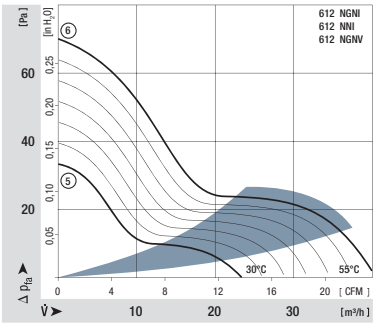


V-Types

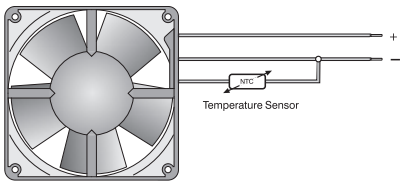


The temperature sensor for controlling the motor speed is not included in delivery.
Temperature sensor LZ 370 see accessories.

I-Types

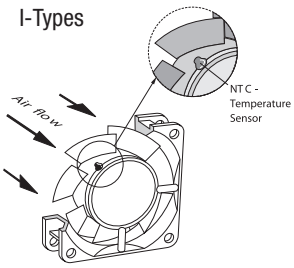


Temperature sensor (NTC-resistor) for controlling the motor speed is positioned directly in the air flow.

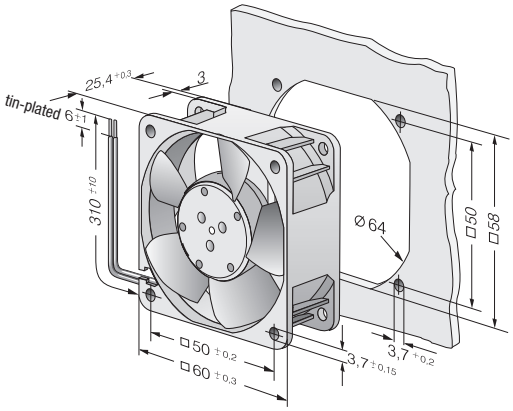




Guard grilles from p. 238

ebmpapst

max. 82 m³/h

# DC axial fans

## Series 600 J 60 x 60 x 32 mm

- **Material:** Housing: GRP[1)] (PBT)
  Impeller: GRP[1)] (PA)
- **Direction of air flow:** Exhaust over struts
- **Direction of rotation:** Clockwise, seen on rotor
- **Connection:** Via single wires AWG 24, TR 64
- **Mass:** 100 g

- **Possible special versions:**
  (See chapter DC fans - specials)
  - Speed signal
  - Go / No-go alarm
  - Alarm with limit speed
  - External temperature sensor
  - PWM control input
  - Analogue control input
  - Protection against moisture

1) Fibreglass-reinforced plastic

| Nominal data | Air flow | Air flow | Nominal voltage | Voltage range | Sound pressure level | Sound power level | Sintec sleeve bearings / Ball bearings | Input power | Nominal speed | Temperature range | Service life $L_{10}$ (40 °C) ebm-papst Standard / Service life $L_{10}$ ($T_{max}$) ebm-papst Standard | Life expectancy $L_{10IPC}$ (40 °C) see page 17 | Curve |
|---|---|---|---|---|---|---|---|---|---|---|---|---|---|
| **Type** | **m³/h** | **CFM** | **VDC** | **VDC** | **dB(A)** | **Bel(A)** | □ / ■ | **Watts** | **rpm** | **°C** | **Hours** | **Hours** | |
| 612 JH | 70 | 41,1 | **12** | 7...13,6 | 53 | 6,4 | ■ | 7,7 | 11 700 | -20...+70 | 57 500 / 27 500 | 97 500 | ① |
| 614 JH | 70 | 41,1 | **24** | 14...26,4 | 53 | 6,4 | ■ | 7,7 | 11 700 | -20...+70 | 57 500 / 27 500 | 97 500 | ① |
| 618 JH | 70 | 41,1 | **48** | 36...56 | 53 | 6,4 | ■ | 7,7 | 11 700 | -20...+70 | 57 500 / 27 500 | 97 500 | ① |
| Fan types with streamer and integrated guard grille. | | | | | | | | | | | | | |
| 614 J/2 HHP | 82 | 48,3 | **24** | 18...30 | 62 | 7,6 | ■ | 14,6 | 15 000 | -20...+75 | 65 000 / 25 000 | 110 000 | ② |
| 618 J/2 HHP | 82 | 48,3 | **48** | 38...58 | 62 | 7,6 | ■ | 14,6 | 15 000 | -20...+75 | 65 000 / 25 000 | 110 000 | ② |

Subject to alternations

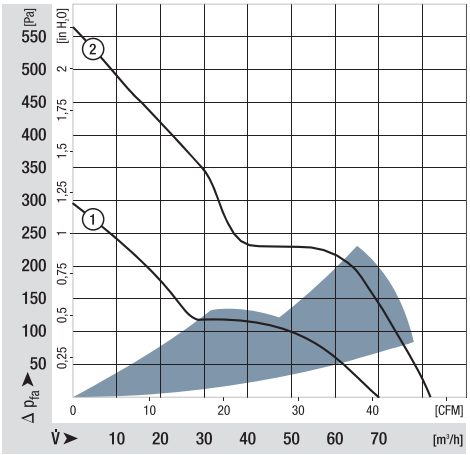


Rear view of types 614 J/2HHP and 618 J/2HHP

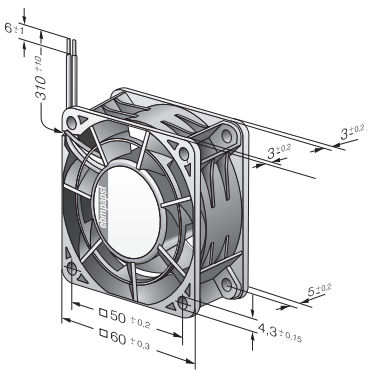


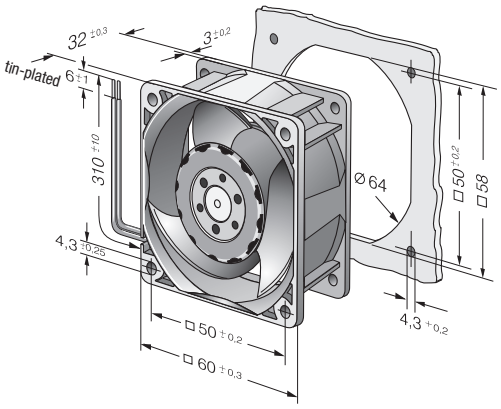

max. 44 m³/h

# DC axial fans

## Series 700 F 70 x 70 x 15 mm

- **Material:** Housing: GRP[1)] (PBT)
  Impeller: GRP[1)] (PA)
- **Direction of air flow:** Exhaust over struts
- **Direction of rotation:** Counter-clockwise, seen on rotor
- **Connection:** Via single wires AWG 24 to AWG 28, TR 64
- **Mass:** 53 g

- **Possible special versions:**
  (See chapter DC fans - specials)
  - Speed signal
  - Go / No-go alarm
  - Protection against moisture

1) Fibreglass-reinforced plastic

| Nominal data | Air flow | Air flow | **Nominal voltage** | Voltage range | Sound pressure level | Sound power level | Sintec sleeve bearings / Ball bearings | Input power | Nominal speed | Temperature range | Service life $L_{10}$ (40 °C) ebm-papst Standard / Service life $L_{10}$ ($T_{max}$) ebm-papst Standard | Life expectancy $L_{10IPC}$ (40 °C) see page 17 | Curve |
|---|---|---|---|---|---|---|---|---|---|---|---|---|---|
| **Type** | **m³/h** | **CFM** | **VDC** | **VDC** | **dB(A)** | **Bel(A)** | □/■ | **Watts** | **rpm** | **°C** | **Hours** | **Hours** | |
| 712 F/2L-005* | 28 | 16,5 | **12** | 8...13,8 | 25 | 4,7 | ■ | 0,6 | 3 300 | -20...+70 | 60 000 / 30 000 | 102 500 | ① |
| 712 F/2M-006* | 36 | 21,2 | **12** | 8...13,8 | 32 | 5,0 | ■ | 1,1 | 4 300 | -20...+70 | 60 000 / 30 000 | 102 500 | ② |
| 712 F | 44 | 25,9 | **12** | 8...13,8 | 38 | 5,3 | ■ | 1,7 | 5 300 | -20...+70 | 60 000 / 30 000 | 102 500 | ③ |
| 714 F | 44 | 25,9 | **24** | 18...28 | 38 | 5,3 | ■ | 1,5 | 5 300 | -20...+70 | 60 000 / 30 000 | 102 500 | ③ |

Subject to alternations

*Version with 3-pin

| | |
|---|---|
| Molex plug housing | 22-01-2035 |
| Molex Contacts | 08-50-0113 |

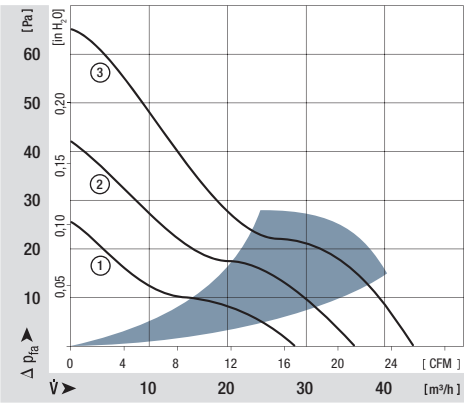


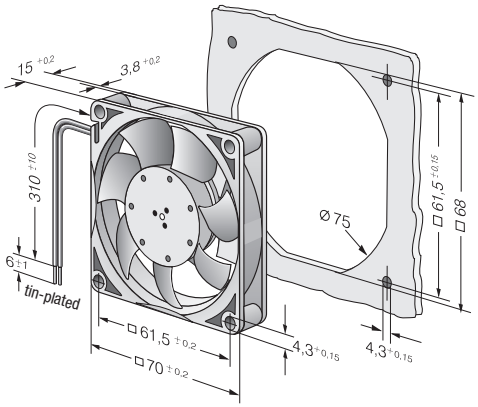




Guard grilles
from p. 238

ebmpapst

max. 117 m³/h

# DC axial fans

## Series 8450 80 x 80 x 25 mm

- **Material:** Housing: GRP[1)] (PBT)
  Impeller: GRP[1)] (PA)
- **Direction of air flow:** Exhaust over struts
- **Direction of rotation:** Counter-clockwise, seen on rotor
- **Connection:** Via single wires AWG 24, TR 64
- **Highlights:** Very low-noise motor
- **Mass:** 105 g

- **Possible special versions:**
  (See chapter DC fans - specials)
  - Speed signal
  - Go / No-go alarm
  - Alarm with limit speed
  - External temperature sensor
  - Internal temperature sensor
  - PWM control input
  - Analogue control input
  - Protection against moisture

1) Fibreglass-reinforced plastic

| Nominal data | Air flow | Air flow | Nominal voltage | Voltage range | Sound pressure level | Sound power level | Sintec sleeve bearings / Ball bearings | Input power | Nominal speed | Temperature range | Service life $L_{10}$ (40 °C) ebm-papst Standard / Service life $L_{10}$ ($T_{max}$) ebm-papst Standard | Life expectancy $L_{10IPC}$ (40 °C) see page 17 | Curve |
|---|---|---|---|---|---|---|---|---|---|---|---|---|---|
| **Type** | **m³/h** | **CFM** | **VDC** | **VDC** | **dB(A)** | **Bel(A)** | □ / ■ | **Watts** | **rpm** | **°C** | **Hours** | **Hours** | |
| 8452 GL | 32 | 18,8 | **12** | 8...15 | 14 | 3,3 | □ | 0,4 | 1 700 | -20...75 | 80 000 / 35 000 | 135 000 | ① |
| 8452 GM | 58 | 34,1 | **12** | 8...15 | 32 | 4,7 | □ | 1,3 | 3 100 | -20...75 | 80 000 / 35 000 | 135 000 | ② |
| 8452 GN | 68 | 40,0 | **12** | 8...15 | 36 | 5,0 | □ | 1,8 | 3 600 | -20...70 | 70 000 / 35 000 | 117 500 | ③ |
| Models with 25 kHz PWM control and speed signal to 4-wire specification (see page 175). | | | | | | | | | | | | | |
| 8452/2 GHP | 75 | 44,1 | **12** | 10,8...13,2 | 38 | 5,3 | □ | 2,5 | 4 000 | -20...70 | 70 000 / 35 000 | 117 500 | ④ |
| 8452/2 GHHP | 83 | 48,8 | **12** | 10,8...13,2 | 42 | 5,5 | □ | 3,5 | 4 400 | -20...60 | 65 000 / 40 000 | 110 000 | ⑤ |
| Models with 1-30 kHz PWM control and speed signal. | | | | | | | | | | | | | |
| 8452/2 H4P | 117 | 68,8 | **12** | 8...15 | 50 | 6,4 | ■ | 6,8 | 6 200 | -20...70 | 60 000 / 30 000 | 102 500 | ⑥ |
| 8454/2 H4P | 117 | 68,8 | **24** | 20,0...26,4 | 50 | 6,4 | ■ | 6,8 | 6 200 | -20...70 | 60 000 / 30 000 | 102 500 | ⑥ |

Subject to alternations

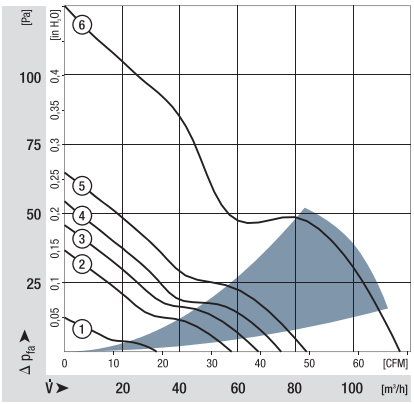


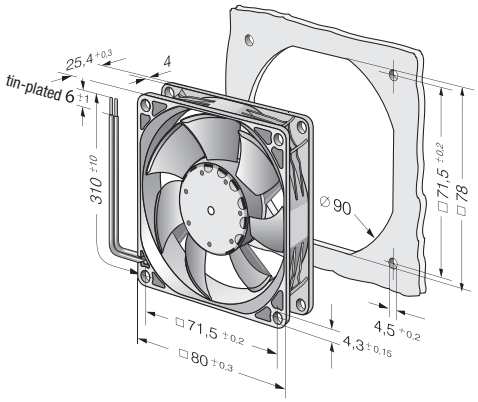

max. 79 m³/h

# DC axial fans

## Series 8400 N 80 x 80 x 25 mm

- **Material:** Housing: GRP[1)] (PBT)
  Impeller: GRP[1)] (PA)
- **Direction of air flow:** Exhaust over struts
- **Direction of rotation:** Counter-clockwise, seen on rotor
- **Connection:** Via single wires AWG 24, TR 64
- **Highlights:** Some models are suitable for use at high ambient temperatures until 85 °C
- **Mass:** 95 g

- **Possible special versions:**
  (See chapter DC fans - specials)
  - Speed signal
  - Go / No-go alarm
  - Alarm with limit speed
  - External temperature sensor
  - Internal temperature sensor
  - PWM control input
  - Analogue control input
  - Protection against moisture
  - Type of protection: IP 54 / IP 68

1) Fibreglass-reinforced plastic

| Nominal data | Air flow | Air flow | Nominal voltage | Voltage range | Sound pressure level | Sound power level | Sintec sleeve bearings / Ball bearings | Input power | Nominal speed | Temperature range | Service life $L_{10}$ (40 °C) ebm-papst Standard / Service life $L_{10}$ ($T_{max}$) ebm-papst Standard | Life expectancy $L_{10IPC}$ (40 °C) see page 17 | Curve |
|---|---|---|---|---|---|---|---|---|---|---|---|---|---|
| Type | m³/h | CFM | VDC | VDC | dB(A) | Bel(A) | □/■ | Watts | rpm | °C | Hours | Hours | |
| 8412 NGLE | 33 | 19,4 | **12** | 8...15 | 12 | 3,5 | □ | 0,5 | 1 500 | -20...+85 | 80 000 / 27 500 | 135 000 | ① |
| 8412 NLE | 33 | 19,4 | **12** | 8...15 | 17 | 3,7 | ■ | 0,3 | 1 500 | -20...+85 | 80 000 / 27 500 | 135 000 | ① |
| 8412 NGMLE | 45 | 26,5 | **12** | 8...15 | 19 | 3,9 | □ | 0,9 | 2 050 | -20...+80 | 80 000 / 32 500 | 135 000 | ② |
| 8412 NMLE | 45 | 26,5 | **12** | 8...15 | 21 | 4,0 | ■ | 0,6 | 2 050 | -20...+85 | 80 000 / 27 500 | 135 000 | ② |
| 8412 NGME | 58 | 34,1 | **12** | 8...15 | 26 | 4,3 | □ | 1,4 | 2 600 | -20...+75 | 80 000 / 35 000 | 135 000 | ③ |
| 8412 NME | 58 | 34,1 | **12** | 8...15 | 27 | 4,4 | ■ | 1,0 | 2 600 | -20...+75 | 80 000 / 35 000 | 135 000 | ③ |
| 8412 NG | 69 | 40,6 | **12** | 8...15 | 32 | 4,7 | □ | 2,0 | 3 100 | -20...+70 | 70 000 / 35 000 | 117 500 | ④ |
| 8412 N | 69 | 40,6 | **12** | 8...15 | 32 | 4,7 | ■ | 1,7 | 3 100 | -20...+70 | 70 000 / 35 000 | 117 500 | ④ |
| 8412 NH | 79 | 46,5 | **12** | 8...13,2 | 37 | 5,0 | ■ | 2,1 | 3 600 | -20...+70 | 70 000 / 35 000 | 117 500 | ⑤ |
| 8412 NH-217 | 79 | 46,5 | **12** | 8...15 | 37 | 5,0 | ■ | 2,5 | 3 600 | -20...+70 | 70 000 / 35 000 | 117 500 | ⑤ |
| 8414 NGL | 33 | 19,4 | **24** | 18...28 | 12 | 3,5 | □ | 0,9 | 1 500 | -20...+70 | 80 000 / 40 000 | 135 000 | ① |
| 8414 NL | 33 | 19,4 | **24** | 18...28 | 17 | 3,7 | ■ | 0,8 | 1 500 | -20...+70 | 80 000 / 40 000 | 135 000 | ① |
| 8414 NGML | 45 | 26,5 | **24** | 18...28 | 19 | 3,9 | □ | 1,2 | 2 050 | -20...+70 | 80 000 / 40 000 | 135 000 | ② |
| 8414 NML | 45 | 26,5 | **24** | 18...28 | 21 | 4,0 | ■ | 1,1 | 2 050 | -20...+70 | 80 000 / 40 000 | 135 000 | ② |
| 8414 NGM | 58 | 34,1 | **24** | 18...28 | 26 | 4,3 | □ | 1,4 | 2 600 | -20...+70 | 80 000 / 40 000 | 135 000 | ③ |
| 8414 NM | 58 | 34,1 | **24** | 18...28 | 27 | 4,4 | ■ | 1,4 | 2 600 | -20...+70 | 80 000 / 40 000 | 135 000 | ③ |
| 8414 NG | 69 | 40,6 | **24** | 18...28 | 32 | 4,7 | □ | 2,2 | 3 100 | -20...+70 | 70 000 / 35 000 | 117 500 | ④ |
| 8414 N | 69 | 40,6 | **24** | 18...28 | 32 | 4,7 | ■ | 1,8 | 3 100 | -20...+70 | 70 000 / 35 000 | 117 500 | ④ |
| 8414 NH | 79 | 46,5 | **24** | 18...26 | 37 | 5,0 | ■ | 2,4 | 3 600 | -20...+70 | 70 000 / 35 000 | 117 500 | ⑤ |
| 8414 NH-221 | 79 | 46,5 | **24** | 18...28 | 37 | 5,0 | ■ | 2,2 | 3 600 | -20...+70 | 70 000 / 35 000 | 117 500 | ⑤ |
| 8418 N | 69 | 40,6 | **48** | 36...56 | 32 | 4,7 | ■ | 2,0 | 3 100 | -20...+70 | 70 000 / 35 000 | 117 500 | ④ |

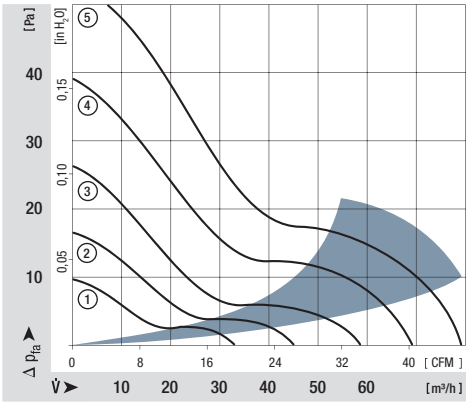


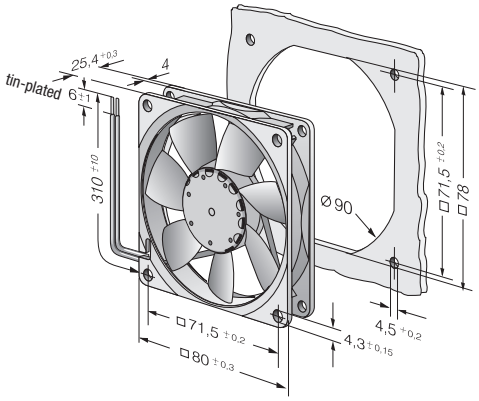




Guard grilles
from p. 238

ebmpapst

max. 58 m³/h

# DC axial fans

## Series 8400 N VARIOFAN 80 x 80 x 25 mm

- **Material:** Housing: GRP[1)] (PBT)
  Impeller: GRP[1)] (PA)
- **Direction of air flow:** Exhaust over struts
- **Direction of rotation:** Counter-clockwise, seen on rotor
- **Connection:** Via single wires AWG 24, TR 64
- **Highlights:** Automatic speed adjustment with temperature sensor
- **Mass:** 95 g

- **Possible special versions:**
  (See chapter DC fans - specials)
  - Speed signal
  - Go / No-go alarm
  - External temperature sensor
  - Internal temperature sensor
  - Protection against moisture

1) Fibreglass-reinforced plastic

| Nominal data | | Air flow | Air flow | Nominal voltage | Voltage range | Sound pressure level | Sound power level | Sintec sleeve bearings / Ball bearings | Input power | Nominal speed | Temperature range | Service life $L_{10}$ (40 °C) ebm-papst Standard / Service life $L_{10}$ ($T_{max}$) ebm-papst Standard | Life expectancy $L_{10IPC}$ (40 °C) see page 17 | Curve |
|---|---|---|---|---|---|---|---|---|---|---|---|---|---|---|
| Type | | m³/h | CFM | VDC | VDC | dB(A) | Bel(A) | □/■ | Watts | rpm | °C | Hours | Hours | |
| 30°C ▼ 50°C | 8412 NGLV | 20 | 11,8 | 12 | 10...14 | < 10 | < 3 | □ | 0,9 | 900 | -20...+65 | 80 000 / 45 000 | 135 000 | ① |
| | | 33 | 19,4 | | | 12 | 3,5 | | 1,1 | 1 500 | | | | ② |
| 30°C ▼ 50°C | 8412 NGMLV | 27 | 15,9 | 12 | 8...14 | < 10 | 3,0 | □ | 1,1 | 1 200 | -20...+65 | 80 000 / 45 000 | 135 000 | ③ |
| | | 45 | 26,6 | | | 19 | 3,9 | | 1,5 | 2 050 | | | | ④ |
| 30°C ▼ 50°C | 8412 NGMI | 35 | 20,6 | 12 | 8...14 | < 13 | 3,5 | □ | 1,4 | 1 600 | -20...+65 | 80 000 / 45 000 | 135 000 | ⑤ |
| | | 58 | 34,1 | | | 26 | 4,3 | | 2,0 | 2 600 | | | | ⑥ |

Subject to alternations

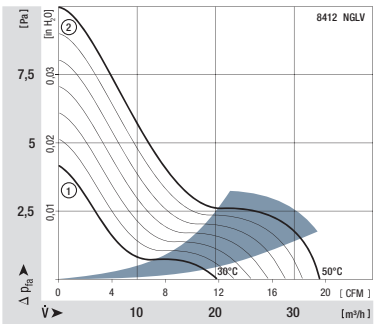


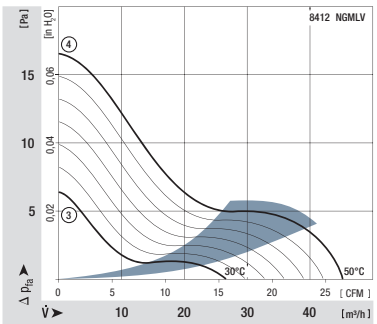


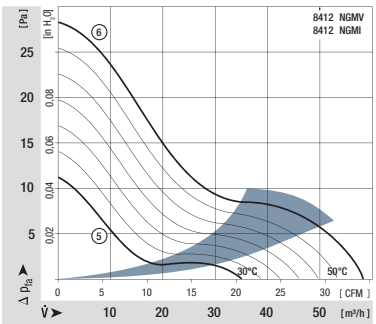


V-Types

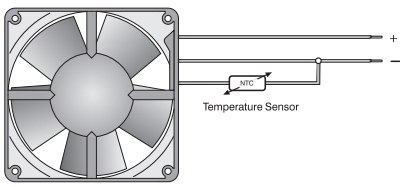


The temperature sensor for controlling the motor speed is not included in delivery.
Temperature sensor LZ 370 see accessories.

I-Types

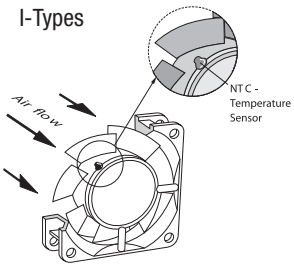


Temperature sensor (NTC-resistor) for controlling the motor speed is positioned directly in the air flow.

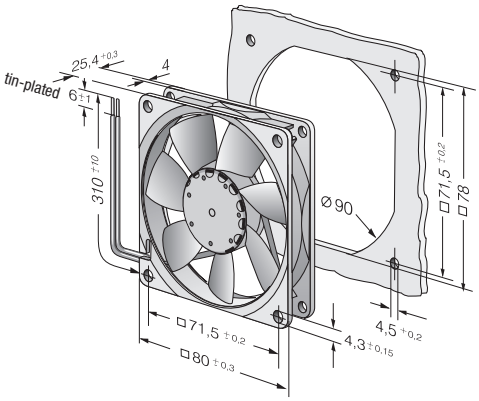

max. 80 m³/h

# DC axial fans

## Series 8300 80 x 80 x 32 mm

- **Material:** Housing: GRP[1)] (PBT)
  Impeller: GRP[1)] (PA)
- **Direction of air flow:** Exhaust over struts
- **Direction of rotation:** Clockwise, seen on rotor
- **Connection:** Via single wires AWG 22, TR 64
- **Mass:** 170 g

1) Fibreglass-reinforced plastic

- **Possible special versions:**
  (See chapter DC fans - specials)
  - Speed signal
  - Go / No-go alarm
  - Alarm with limit speed
  - External temperature sensor
  - Internal temperature sensor
  - PWM control input
  - Analogue control input
  - Protection against moisture
  - Protection against fog
  - Type of protection: IP 54 / IP 68

| Nominal data | Air flow | Air flow | Nominal voltage | Voltage range | Sound pressure level | Sound power level | Sintec sleeve bearings / Ball bearings | Input power | Nominal speed | Temperature range | Service life $L_{10}$ (40 °C) ebm-papst Standard / Service life $L_{10}$ ($T_{max}$) ebm-papst Standard | Life expectancy $L_{10IPC}$ (40 °C) see page 17 | Curve |
|---|---|---|---|---|---|---|---|---|---|---|---|---|---|
| **Type** | **m³/h** | **CFM** | **VDC** | **VDC** | **dB(A)** | **Bel(A)** | □/■ | **Watts** | **rpm** | **°C** | **Hours** | **Hours** | |
| 8312 L | 32 | 18,8 | **12** | 6...15 | 24 | 4,0 | ■ | 1,2 | 2 000 | -20...+75 | 80 000 / 32 500 | 135 000 | ① |
| 8312 M | 48 | 28,3 | **12** | 6...15 | 34 | 5,0 | ■ | 2,2 | 3 000 | -20...+75 | 70 000 / 27 500 | 117 500 | ② |
| 8312 | 54 | 31,8 | **12** | 6...15 | 36 | 5,2 | ■ | 2,6 | 3 300 | -20...+75 | 70 000 / 27 500 | 117 500 | ③ |
| 8312 HL | 67 | 39,4 | **12** | 6...15 | 43 | 5,8 | ■ | 4,0 | 4 200 | -20...+75 | 62 500 / 25 000 | 105 000 | ④ |
| 8312 H | 80 | 47,1 | **12** | 6...12,6 | 48 | 6,2 | ■ | 6,4 | 5 000 | -20...+60 | 55 000 / 35 000 | 92 500 | ⑤ |
| 8314 L | 32 | 18,8 | **24** | 12...31,5 | 24 | 4,0 | ■ | 1,0 | 2 000 | -20...+75 | 80 000 / 32 500 | 135 000 | ① |
| 8314 M | 48 | 28,3 | **24** | 12...31,5 | 34 | 5,0 | ■ | 2,3 | 3 000 | -20...+75 | 70 000 / 27 500 | 117 500 | ② |
| 8314 | 54 | 31,8 | **24** | 12...31,5 | 36 | 5,2 | ■ | 2,7 | 3 300 | -20...+75 | 70 000 / 27 500 | 117 500 | ③ |
| 8314 HL | 67 | 39,4 | **24** | 12...31,5 | 43 | 5,8 | ■ | 4,3 | 4 200 | -20...+75 | 62 500 / 25 000 | 105 000 | ④ |
| 8314 H | 80 | 47,1 | **24** | 12...28 | 48 | 6,2 | ■ | 6,0 | 5 000 | -20...+75 | 55 000 / 22 500 | 92 500 | ⑤ |
| 8318 | 54 | 31,8 | **48** | 36...60 | 36 | 5,2 | ■ | 3,0 | 3 300 | -20...+75 | 70 000 / 27 500 | 117 500 | ③ |
| 8318 HL | 67 | 39,4 | **48** | 36...60 | 43 | 5,8 | ■ | 4,2 | 4 200 | -20...+75 | 62 500 / 25 000 | 105 000 | ④ |
| 8318 H | 80 | 47,1 | **48** | 36...60 | 48 | 6,2 | ■ | 6,2 | 5 000 | -20...+65 | 55 000 / 30 000 | 92 500 | ⑤ |

Subject to alternations

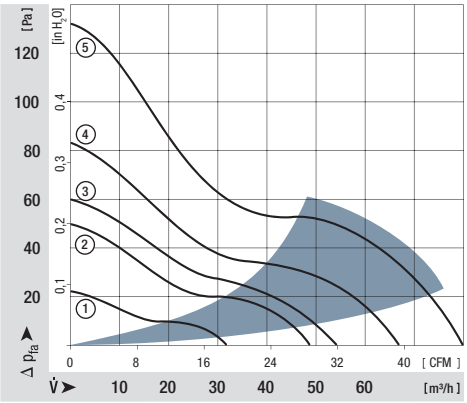


Rotor protrusion max. 0,4 mm.

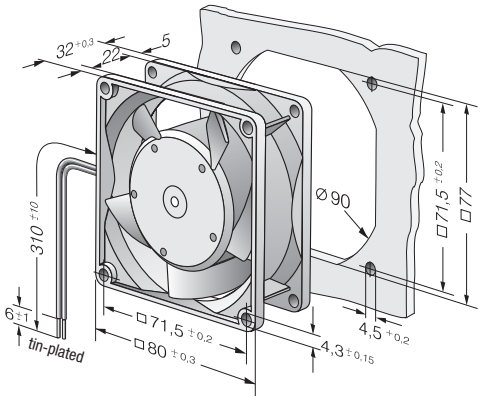




Guard grilles
from p. 238

ebmpapst

max. 222 m³/h

# DC axial fans

## Series 8200 J 80 x 80 x 38 mm

- **Material:** Housing: GRP[1)] (PBT)
  Impeller: GRP[1)] (PA)
- **Direction of air flow:** Exhaust over struts
- **Direction of rotation:** Counter-clockwise, seen on rotor
- **Connection:** Via single wires AWG 24 (H3 and H4: AWG 22), TR 64
- **Mass:** 160 g (H3 and H4: 200 g)

- **Possible special versions:**
  (See chapter DC fans - specials)
  - Speed signal
  - Go / No-go alarm
  - Alarm with limit speed
  - External temperature sensor
  - Internal temperature sensor
  - PWM control input
  - Analogue control input
  - Protection against moisture
  - Type of protection: IP 54 / IP 68

1) Fibreglass-reinforced plastic

| Nominal data | Air flow | Air flow | Nominal voltage | Voltage range | Sound pressure level | Sound power level | Sintec sleeve bearings / Ball bearings | Input power* | Nominal speed | Temperature range | Service life $L_{10}$ (40 °C) ebm-papst Standard / Service life $L_{10}$ ($T_{max}$) ebm-papst Standard | Life expectancy $L_{10IPC}$ (40 °C) see page 17 | Curve |
|---|---|---|---|---|---|---|---|---|---|---|---|---|---|
| **Type** | **m³/h** | **CFM** | **VDC** | **VDC** | **dB(A)** | **Bel(A)** | □ / ■ | **Watts** | **rpm** | **°C** | **Hours** | **Hours** | |
| 8212 JN | 132 | 78 | **12** | 7...13,8 | 55 | 6,6 | ■ | 10 | 8400 | -20...+70 | 62 500 / 32 500 | 105 000 | ① |
| 8212 JH3 *S-Force* | 190 | 112 | **12** | 6...13,8 | 66 | 7,3 | ■ | 26* | 12 000 | -20...+70 | 55 000 / 27 500 | 92 500 | ② |
| 8212 JH4 *S-Force* | 222 | 131 | **12** | 6...13,8 | 71 | 7,8 | ■ | 39* | 14 000 | -20...+70 | 50 000 / 25 000 | 85 000 | ③ |
| 8214 JN | 132 | 78 | **24** | 18...26,4 | 55 | 6,6 | ■ | 11 | 8400 | -20...+70 | 62 500 / 32 500 | 105 000 | ① |
| 8214 JH3 *S-Force* | 190 | 112 | **24** | 12...27,6 | 66 | 7,3 | ■ | 26* | 12 000 | -20...+70 | 55 000 / 27 500 | 92 500 | ② |
| 8214 JH4 *S-Force* | 222 | 131 | **24** | 12...27,6 | 71 | 7,8 | ■ | 38* | 14 000 | -20...+70 | 50 000 / 25 000 | 85 000 | ③ |
| 8218 JN | 132 | 78 | **48** | 36...53 | 55 | 6,6 | ■ | 11 | 8400 | -20...+70 | 62 500 / 32 500 | 105 000 | ① |
| 8218 JH3 *S-Force* | 190 | 112 | **48** | 36...53 | 66 | 7,3 | ■ | 25* | 12 000 | -20...+70 | 55 000 / 27 500 | 92 500 | ② |
| 8218 JH4 *S-Force* | 222 | 131 | **48** | 20...58 | 71 | 7,8 | ■ | 36* | 14 000 | -20...+70 | 50 000 / 25 000 | 85 000 | ③ |

Subject to alternations

8200 JH3 and JH4 also available as standard with PWM control input and speed signal.
Speed control range from 2000 rpm up to maximum nominal speed. Stationary at 0 % PWM, maximum speed at sensor break.
* Input power at free air flow, these values can be significantly higher in the operating point.

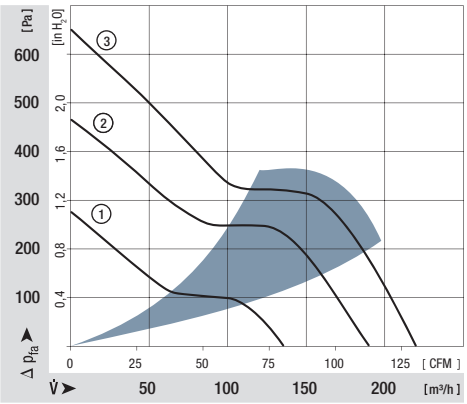


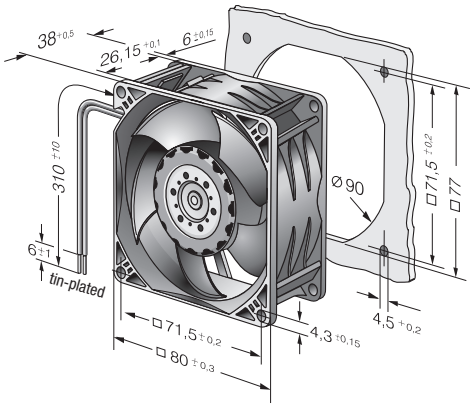

max. 102 m³/h

# DC axial fans

## Series 3400 N 92 x 92 x 25 mm

- **Material:** Housing: GRP[1)] (PBT)
  Impeller: GRP[1)] (PA)
- **Direction of air flow:** Exhaust over struts
- **Direction of rotation:** Counter-clockwise, seen on rotor
- **Connection:** Via single wires AWG 24, TR 64
- **Mass:** 100 g

- **Possible special versions:**
  (See chapter DC fans - specials)
  - Speed signal
  - Go / No-go alarm
  - Alarm with limit speed
  - External temperature sensor
  - Internal temperature sensor
  - PWM control input
  - Analogue control input
  - Protection against moisture
  - Type of protection: IP 54 / IP 68

1) Fibreglass-reinforced plastic

| Nominal data | Air flow | Air flow | Nominal voltage | Voltage range | Sound pressure level | Sound power level | Sintec sleeve bearings / Ball bearings | Input power | Nominal speed | Temperature range | Service life $L_{10}$ (40 °C) ebm-papst Standard / Service life $L_{10}$ ($T_{max}$) ebm-papst Standard | Life expectancy $L_{10IPC}$ (40 °C) see page 17 | Curve |
|---|---|---|---|---|---|---|---|---|---|---|---|---|---|
| Type | m³/h | CFM | VDC | VDC | dB(A) | Bel(A) | □/■ | Watts | rpm | °C | Hours | Hours | |
| 3412 NGLE | 61 | 35,9 | **12** | 8...15 | 23 | 4,0 | □ | 1,1 | 1 950 | -20...+80 | 80 000 / 22 500 | 135 000 | ① |
| 3412 NLE | 61 | 35,9 | **12** | 8...15 | 23 | 4,0 | ■ | 0,8 | 1 950 | -20...+85 | 80 000 / 17 500 | 135 000 | ① |
| 3412 NGME | 72 | 42,4 | **12** | 8...15 | 28 | 4,3 | □ | 1,6 | 2 300 | -20...+75 | 75 000 / 27 500 | 127 500 | ② |
| 3412 NME | 72 | 42,4 | **12** | 8...15 | 28 | 4,3 | ■ | 1,1 | 2 300 | -20...+75 | 75 000 / 27 500 | 127 500 | ② |
| 3412 NG | 84 | 49,4 | **12** | 8...15 | 32 | 4,7 | □ | 1,9 | 2 700 | -20...+70 | 70 000 / 35 000 | 117 500 | ③ |
| 3412 N | 84 | 49,4 | **12** | 8...15 | 32 | 4,7 | ■ | 1,7 | 2 700 | -20...+70 | 70 000 / 35 000 | 117 500 | ③ |
| 3412 NGH | 94 | 55,3 | **12** | 8...15 | 36 | 5,0 | □ | 2,3 | 3 000 | -20...+70 | 70 000 / 35 000 | 117 500 | ④ |
| 3412 NH | 94 | 55,3 | **12** | 8...15 | 36 | 5,0 | ■ | 2,1 | 3 000 | -20...+70 | 70 000 / 35 000 | 117 500 | ④ |
| 3412 NGHH | 102 | 60,0 | **12** | 8...13,2 | 39 | 5,1 | □ | 3,2 | 3 250 | -20...+60 | 70 000 / 45 000 | 127 500 | ⑤ |
| 3412 NHH | 102 | 60,0 | **12** | 8...13,2 | 39 | 5,1 | ■ | 2,9 | 3 250 | -20...+60 | 70 000 / 45 000 | 127 500 | ⑤ |
| 3412 NHH-379 | 102 | 60,0 | **12** | 8...15 | 39 | 5,1 | ■ | 2,7 | 3 250 | -20...+70 | 70 000 / 35 000 | 117 500 | ⑤ |
| 3414 NGL | 61 | 35,9 | **24** | 18...28 | 23 | 4,0 | □ | 1,4 | 1 950 | -20...+70 | 80 000 / 40 000 | 135 000 | ① |
| 3414 NL | 61 | 35,9 | **24** | 18...28 | 23 | 4,0 | ■ | 1,1 | 1 950 | -20...+70 | 80 000 / 40 000 | 135 000 | ① |
| 3414 NGM | 72 | 42,4 | **24** | 18...28 | 28 | 4,3 | □ | 1,7 | 2 300 | -20...+70 | 75 000 / 37 500 | 127 500 | ② |
| 3414 NM | 72 | 42,4 | **24** | 18...28 | 28 | 4,3 | ■ | 1,4 | 2 300 | -20...+70 | 75 000 / 37 500 | 127 500 | ② |
| 3414 NG | 84 | 49,4 | **24** | 18...28 | 32 | 4,7 | □ | 2,5 | 2 700 | -20...+70 | 70 000 / 35 000 | 117 500 | ③ |
| 3414 N | 84 | 49,4 | **24** | 18...28 | 32 | 4,7 | ■ | 2,1 | 2 700 | -20...+70 | 70 000 / 35 000 | 117 500 | ③ |
| 3414 NGH | 94 | 55,3 | **24** | 18...26 | 36 | 5,0 | □ | 3,0 | 3 000 | -20...+70 | 70 000 / 35 000 | 117 500 | ④ |
| 3414 NH | 94 | 55,3 | **24** | 18...26 | 36 | 5,0 | ■ | 2,3 | 3 000 | -20...+70 | 70 000 / 35 000 | 117 500 | ④ |
| 3414 NGHH | 102 | 60,0 | **24** | 18...26 | 39 | 5,1 | □ | 3,2 | 3 250 | -20...+70 | 70 000 / 35 000 | 117 500 | ⑤ |
| 3414 NGHH-389 | 102 | 60,0 | **24** | 18...28 | 39 | 5,1 | □ | 3,2 | 3 250 | -20...+70 | 70 000 / 35 000 | 117 500 | ⑤ |
| 3414 NHH | 102 | 60,0 | **24** | 18...26 | 39 | 5,1 | ■ | 3,1 | 3 250 | -20...+70 | 70 000 / 35 000 | 117 500 | ⑤ |
| 3414 NHH-386 | 102 | 60,0 | **24** | 18...28 | 39 | 5,1 | ■ | 3,2 | 3 250 | -20...+70 | 70 000 / 35 000 | 117 500 | ⑤ |
| 3418 N | 84 | 49,4 | **48** | 36...56 | 32 | 4,7 | ■ | 2,4 | 2 700 | -20...+70 | 70 000 / 35 000 | 117 500 | ③ |

Other 48 VDC models on request.

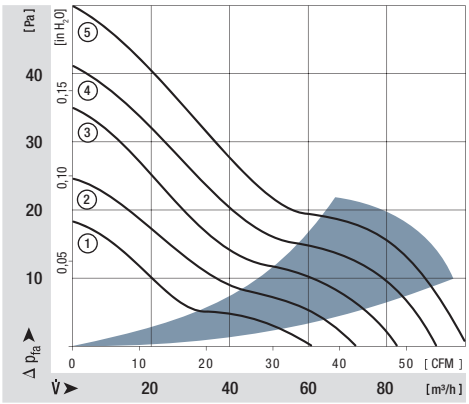


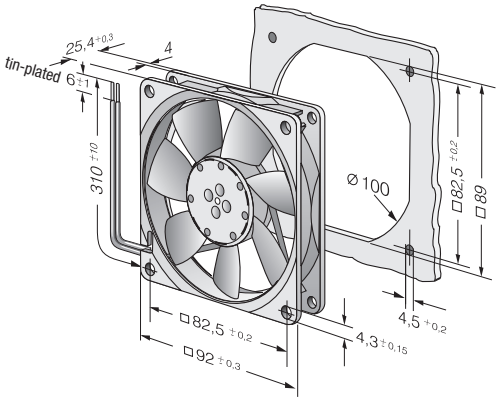




Guard grilles
from p. 238

ebmpapst

max. 84 m³/h

# DC axial fans

## Series 3400 N VARIOFAN 92 x 92 x 25 mm

- **Material:** Housing: GRP[1)] (PBT)
  Impeller: GRP[1)] (PA)
- **Direction of air flow:** Exhaust over struts
- **Direction of rotation:** Counter-clockwise, seen on rotor
- **Connection:** Via single wires AWG 24, TR 64
- **Highlights:** Automatic speed adjustment with temperature sensor
- **Mass:** 100 g

- **Possible special versions:**
  (See chapter DC fans - specials)
  - Speed signal
  - Go / No-go alarm
  - External temperature sensor
  - Internal temperature sensor
  - Protection against moisture

1) Fibreglass-reinforced plastic

| Nominal data | | Air flow | Air flow | Nominal voltage | Voltage range | Sound pressure level | Sound power level | Sintec sleeve bearings / Ball bearings | Input power | Nominal speed | Temperature range | Service life $L_{10}$ (40 °C) ebm-papst Standard / Service life $L_{10}$ ($T_{max}$) ebm-papst Standard | Life expectancy $L_{10IPC}$ (40 °C) see page 17 | Curve |
|---|---|---|---|---|---|---|---|---|---|---|---|---|---|---|
| Type | | m³/h | CFM | VDC | VDC | dB(A) | Bel(A) | □ / ■ | Watts | rpm | °C | Hours | Hours | |
| 30°C | 3412 NGMV | 44 | 25,9 | 12 | 8...14 | 14 | 3,5 | □ | 1,5 | 1 400 | -20...+65 | 75 000 / 42 500 | 127 500 | ① |
| 50°C | | 72 | 42,4 | | | 28 | 4,3 | | 2,0 | 2 300 | | | | ② |
| 30°C | 3412 NGV | 50 | 29,4 | 12 | 8...12,6 | 16 | 3,7 | □ | 1,6 | 1 600 | -20...+65 | 75 000 / 42 500 | 127 500 | ③ |
| 50°C | | 84 | 49,4 | | | 32 | 4,7 | | 2,5 | 2 700 | | | | ④ |

Subject to alternations

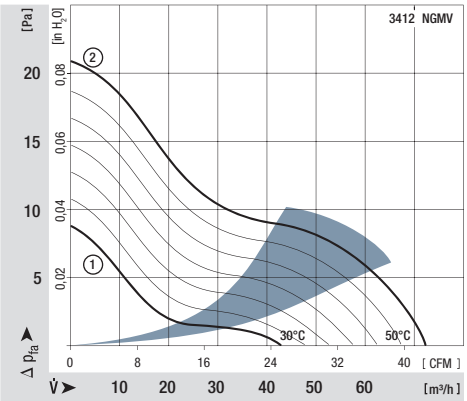


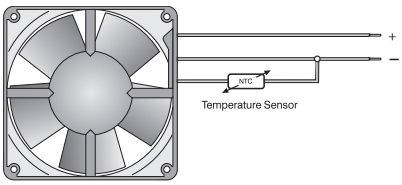


The temperature sensor for controlling the motor speed is not included in delivery.
Temperature sensor LZ 370 see accessories.

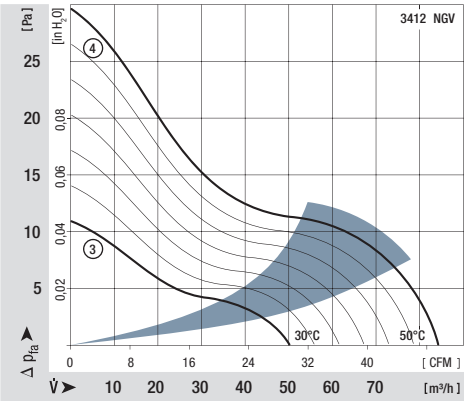


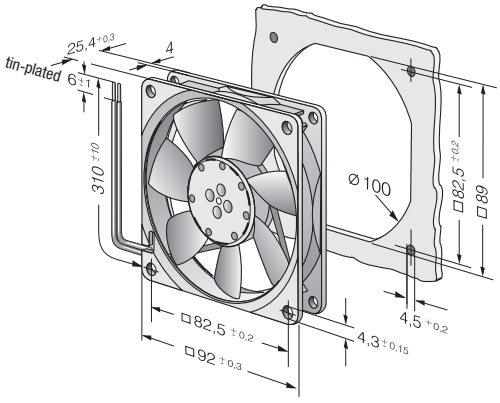

max. 107 m³/h

# DC axial fans

## Series 3300 92 x 92 x 32 mm

- **Material:** Housing: GRP[1)] (PBT)
  Impeller: GRP[1)] (PA)
- **Direction of air flow:** Exhaust over struts
- **Direction of rotation:** Clockwise, seen on rotor
- **Connection:** Via single wires AWG 22, TR 64
- **Mass:** 190 g

- **Possible special versions:**
  (See chapter DC fans - specials)
  - Speed signal
  - Go / No-go alarm
  - Alarm with limit speed
  - External temperature sensor
  - Internal temperature sensor
  - PWM control input
  - Analogue control input
  - Protection against moisture
  - Protection against salt fog
  - Type of protection: IP 54 / IP 68

1) Fibreglass-reinforced plastic

| Nominal data | Air flow | Air flow | Nominal voltage | Voltage range | Sound pressure level | Sound power level | Sintec sleeve bearings / Ball bearings | Input power | Nominal speed | Temperature range | Service life $L_{10}$ (40 °C) ebm-papst Standard / Service life $L_{10}$ ($T_{max}$) ebm-papst Standard | Life expectancy $L_{10IPC}$ (40 °C) see page 17 | Curve |
|---|---|---|---|---|---|---|---|---|---|---|---|---|---|
| **Type** | **m³/h** | **CFM** | **VDC** | **VDC** | **dB(A)** | **Bel(A)** | □/■ | **Watts** | **rpm** | **°C** | **Hours** | **Hours** | |
| 3312 L | 56 | 33,0 | **12** | 6...15 | 29 | 4,5 | ■ | 1,5 | 2 150 | -20...+75 | 80 000 / 35 000 | 135 000 | ① |
| 3312 GM | 68 | 40,0 | **12** | 6...15 | 34 | 4,8 | □ | 1,8 | 2 600 | -20...+75 | 70 000 / 30 000 | 117 500 | ② |
| 3312 M | 68 | 40,0 | **12** | 6...15 | 34 | 4,8 | ■ | 1,8 | 2 600 | -20...+75 | 70 000 / 30 000 | 117 500 | ② |
| 3312 | 80 | 47,1 | **12** | 6...15 | 37 | 5,2 | ■ | 2,5 | 3 000 | -20...+75 | 70 000 / 30 000 | 117 500 | ③ |
| 3312-177 | 93 | 54,7 | **12** | 6...15 | 43 | 5,7 | ■ | 3,5 | 3 400 | -20...+75 | 65 000 / 27 500 | 110 000 | ⑤ |
| 3314 G | 80 | 47,1 | **24** | 12...28 | 37 | 5,2 | □ | 2,5 | 3 000 | -20...+75 | 70 000 / 30 000 | 117 500 | ③ |
| 3314 | 80 | 47,1 | **24** | 12...28 | 37 | 5,2 | ■ | 2,5 | 3 000 | -20...+75 | 70 000 / 30 000 | 117 500 | ③ |
| 3314-140 | 85 | 50,0 | **24** | 12...28 | 40 | 5,4 | ■ | 3,0 | 3 200 | -20...+75 | 70 000 / 30 000 | 117 500 | ④ |
| 3314 H | 107 | 63,0 | **24** | 12...28 | 47 | 6,0 | ■ | 5,0 | 4 000 | -20...+75 | 57 500 / 25 000 | 97 500 | ⑥ |
| 3318 | 80 | 47,1 | **48** | 36...60 | 37 | 5,2 | ■ | 2,4 | 3 000 | -20...+75 | 70 000 / 30 000 | 117 500 | ③ |
| 3318 H | 107 | 63,0 | **48** | 36...60 | 47 | 6,0 | ■ | 4,9 | 4 000 | -20...+60 | 57 500 / 32 500 | 97 500 | ⑥ |

Subject to alternations

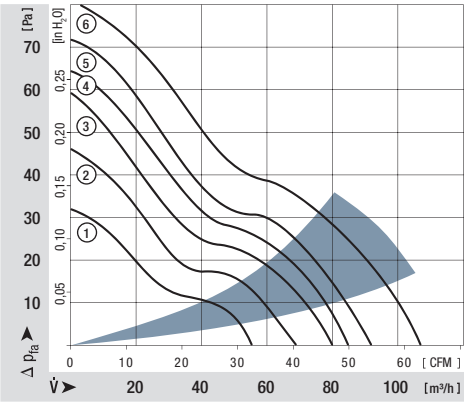


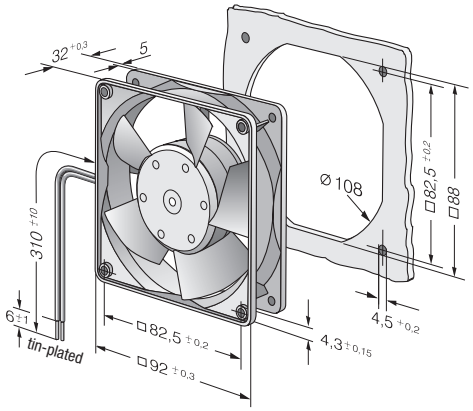




Guard grilles
from p. 238

ebmpapst

max. 133 m³/h

# DC axial fans

## Series 3300 N 92 x 92 x 32 mm

- **Material:** Housing: GRP[1)] (PBT)
  Impeller: GRP[1)] (PA)
- **Direction of air flow:** Exhaust over struts
- **Direction of rotation:** Clockwise, seen on rotor
- **Connection:** Via single wires AWG 24
  UL 1061, TR 64
- **Mass:** 190 g

- **Possible special versions:**
  (See chapter DC fans - specials)
  - Speed signal
  - Go / No-go alarm
  - External temperature sensor
  - Internal temperature sensor
  - PWM control input
  - Analogue control input
  - Protection against moisture
  - Protection against salt fog
  - Type of protection: IP 54 / IP 68

1) Fibreglass-reinforced plastic

| Nominal data | Air flow | Air flow | **Nominal voltage** | Voltage range | Sound pressure level | Sound power level | Sintec sleeve bearings / Ball bearings | Input power | Nominal speed | Temperature range | Service life $L_{10}$ (40 °C) ebm-papst Standard / Service life $L_{10}$ ($T_{max}$) ebm-papst Standard | Life expectancy $L_{10IPC}$ (40 °C) see page 17 | Curve |
|---|---|---|---|---|---|---|---|---|---|---|---|---|---|
| **Type** | **m³/h** | **CFM** | **VDC** | **VDC** | **dB(A)** | **Bel(A)** | □/■ | **Watts** | **rpm** | **°C** | **Hours** | **Hours** | |
| 3312 NL | 56 | 33 | **12** | 6...15 | 23 | 4,0 | ■ | 0,8 | 1 850 | -20...+75 | 80 000 / 35 000 | 135 000 | ① |
| 3312 NM | 68 | 40 | **12** | 6...15 | 29 | 4,3 | ■ | 1,3 | 2 250 | -20...+75 | 70 000 / 30 000 | 117 500 | ② |
| 3312 NN | 80 | 47 | **12** | 6...15 | 34 | 4,7 | ■ | 1,7 | 2 650 | -20...+75 | 70 000 / 30 000 | 117 500 | ③ |
| 3312 NH | 93 | 54 | **12** | 6...15 | 36,5 | 5,0 | ■ | 2,5 | 3 050 | -20...+75 | 65 000 / 27 500 | 110 000 | ④ |
| 3312 NHH | 107 | 63 | **12** | 6...15 | 40 | 5,4 | ■ | 3,4 | 3 450 | -20...+75 | 57 500 / 25 000 | 97 500 | ⑤ |
| 3312 NH3 | 133 | 78 | **12** | 6...15 | 48 | 5,9 | ■ | 6,4 | 4 350 | -20...+70 | 50 000 / 25 000 | 85 000 | ⑥ |

Subject to alternations

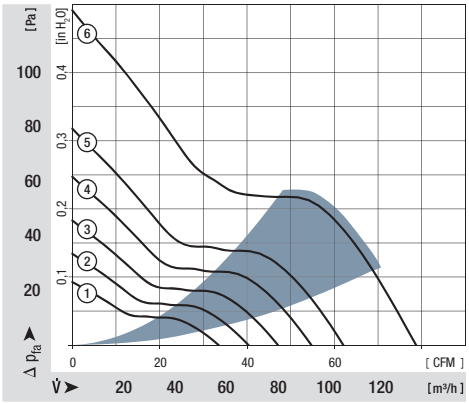


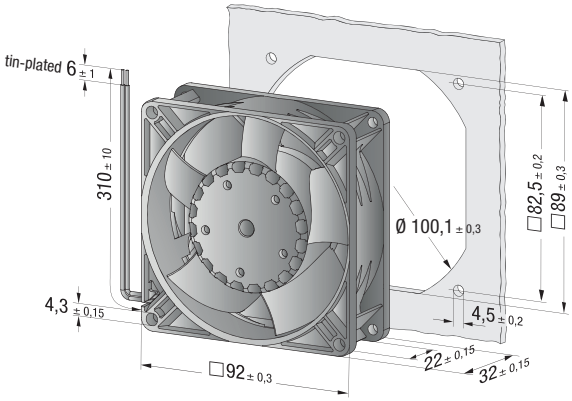

max. 280 m³/h

# DC axial fans

## Series 3200 J 92 x 92 x 38 mm

- **Material:** Housing: GRP[1)] (PBT)
  Impeller: GRP[1)] (PA)
- **Direction of air flow:** Exhaust over struts
- **Direction of rotation:** Clockwise, seen on rotor
- **Connection:** Via single wires AWG 24 (H3 and H4: AWG 22), TR 64
- **Mass:** 240 g (H3 and H4: 280 g)

- **Possible special versions:**
  (See chapter DC fans - specials)
  - Speed signal
  - Go / No-go alarm
  - Alarm with limit speed
  - External temperature sensor
  - Internal temperature sensor
  - PWM control input
  - Analogue control input
  - Protection against moisture
  - Type of protection: IP 54 / IP 68

1) Fibreglass-reinforced plastic

| Nominal data | Air flow | Air flow | **Nominal voltage** | Voltage range | Sound pressure level | Sound power level | Sintec sleeve bearings / Ball bearings | Input power* | Nominal speed | Temperature range | Service life $L_{10}$ (40 °C) ebm-papst Standard / Service life $L_{10}$ ($T_{max}$) ebm-papst Standard | Life expectancy $L_{10IPC}$ (40 °C) see page 17 | Curve |
|---|---|---|---|---|---|---|---|---|---|---|---|---|---|
| **Type** | **m³/h** | **CFM** | **VDC** | **VDC** | **dB(A)** | **Bel(A)** | □/■ | **Watts** | **rpm** | **°C** | **Hours** | **Hours** | |
| 3212 JN | 130 | 76,5 | **12** | 7...13,8 | 51 | 6,1 | ■ | 7,5 | 6 000 | -20 ...+70 | 70 000 / 35 000 | 117 500 | ① |
| 3212 JH | 146 | 86,0 | **12** | 7...15 | 55 | 6,4 | ■ | 9,0 | 6 800 | -20 ...+70 | 70 000 / 35 000 | 117 500 | ② |
| 3212 JH3 *S-Force* | 237 | 139,5 | **12** | 6...13,8 | 69 | 7,8 | ■ | 31,0* | 11 000 | -20 ...+70 | 65 000 / 32 500 | 110 000 | ③ |
| 3212 JH4 *S-Force* | 280 | 164,8 | **12** | 6...13,8 | 73 | 8,2 | ■ | 50,0* | 13 000 | -20 ...+70 | 60 000 / 30 000 | 110 000 | ④ |
| 3214 JN | 130 | 76,5 | **24** | 11...28 | 51 | 6,1 | ■ | 6,5 | 6 000 | -20 ...+70 | 70 000 / 35 000 | 117 500 | ① |
| 3214 JH | 146 | 86,0 | **24** | 12...30 | 55 | 6,4 | ■ | 9,0 | 6 800 | -20 ...+70 | 70 000 / 35 000 | 117 500 | ② |
| 3214 JH3 *S-Force* | 237 | 139,5 | **24** | 12...27,6 | 69 | 7,8 | ■ | 30,0* | 11 000 | -20 ...+70 | 65 000 / 32 500 | 110 000 | ③ |
| 3214 JH4 *S-Force* | 280 | 164,8 | **24** | 12...27,6 | 73 | 8,2 | ■ | 50,0* | 13 000 | -20 ...+70 | 60 000 / 30 000 | 110 000 | ④ |
| 3218 JN | 130 | 76,5 | **48** | 36...56 | 51 | 6,1 | ■ | 7,0 | 6 000 | -20 ...+70 | 70 000 / 35 000 | 117 500 | ① |
| 3218 JH | 146 | 86,0 | **48** | 36...53 | 55 | 6,4 | ■ | 9,5 | 6 800 | -20 ...+70 | 70 000 / 35 000 | 117 500 | ② |
| 3218 JH3 *S-Force* | 237 | 139,5 | **48** | 20...58,0 | 69 | 7,8 | ■ | 29,0* | 11 000 | -20 ...+70 | 65 000 / 32 500 | 110 000 | ③ |
| 3218 JH4 *S-Force* | 280 | 164,8 | **48** | 20...58,0 | 73 | 8,2 | ■ | 50,0* | 13 000 | -20 ...+70 | 60 000 / 30 000 | 110 000 | ④ |

Subject to alternations

3200 JH3 and JH4 also available as standard with PWM control input and speed signal.
Speed control range from 2000 rpm up to maximum nominal speed. Stationary at 0 % PWM, maximum speed at sensor break.
* Input power at free air flow, these values can be significantly higher in the operating point.

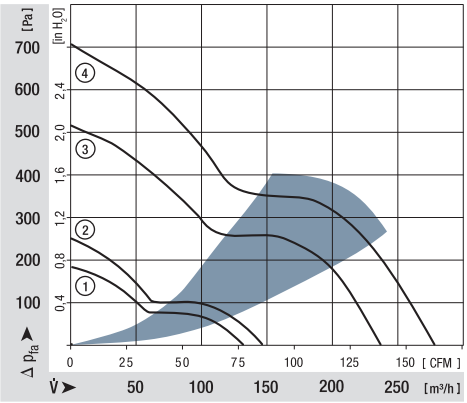


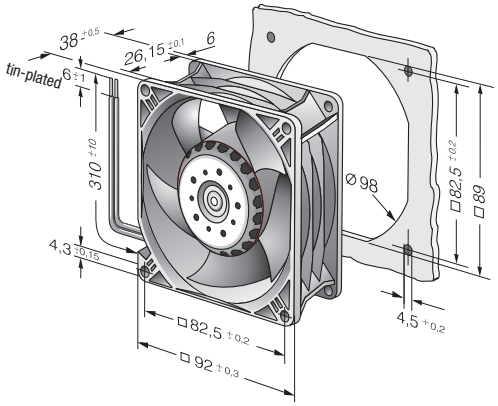




Guard grilles
from p. 238

ebmpapst

max. 270 m³/h

**S-Panther**

# DC axial fans

## Series 3250 J 92 x 92 x 38 mm

- **Material:** Housing: GRP[1)] (PBT)
  Impeller: GRP[1)] (PA)
- **Direction of air flow:** Exhaust over struts
- **Direction of rotation:** Clockwise, seen on rotor
- **Connection:** Via single wires AWG 22, TR 64
- **Mass:** 240 g

- **Possible special versions:**
  (See chapter DC fans - specials)
  - Speed signal
  - Go / No-go alarm
  - External temperature sensor
  - Internal temperature sensor
  - PWM control input
  - Analogue control input
  - Protection against moisture
  - Protection against salt fog
  - Type of protection: IP 54 / IP 68

1) Fibreglass-reinforced plastic

| Nominal data | Air flow | Air flow | **Nominal voltage** | Voltage range | Sound pressure level | Sound power level | Sintec sleeve bearings / Ball bearings | Input power* | Nominal speed | Temperature range | Service life $L_{10}$ (40 °C) ebm-papst Standard / Service life $L_{10}$ ($T_{max}$) ebm-papst Standard | Life expectancy $L_{10IPC}$ (40 °C) see page 17 | Curve |
|---|---|---|---|---|---|---|---|---|---|---|---|---|---|
| **Type** | **m³/h** | **CFM** | **VDC** | **VDC** | **dB(A)** | **Bel(A)** | □/■ | **Watts** | **rpm** | **°C** | **Hours** | **Hours** | |
| 3258 JHP | 145 | 85 | **48** | 36...56 | 47 | 5,8 | ■ | 5,3 | 4 100 | -20...+70 | 85 000 / 42 500 | 142 500 | ① |
| 3258 JHHP | 235 | 138 | **48** | 36...56 | 59 | 7,2 | ■ | 22,6 | 6 650 | -20...+70 | 80 000 / 40 000 | 135 000 | ② |
| 3258 JH3P | 270 | 158 | **48** | 36...56 | 63 | 7,7 | ■ | 34,3 | 7 600 | -20...+70 | 75 000 / 37 500 | 127 500 | ③ |

Subject to alternations

12 V and 24 V variants also available on request.
* Input power at free air flow, these values can be significantly higher in the operating point.

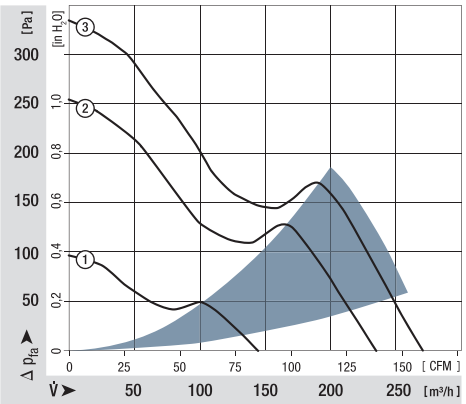


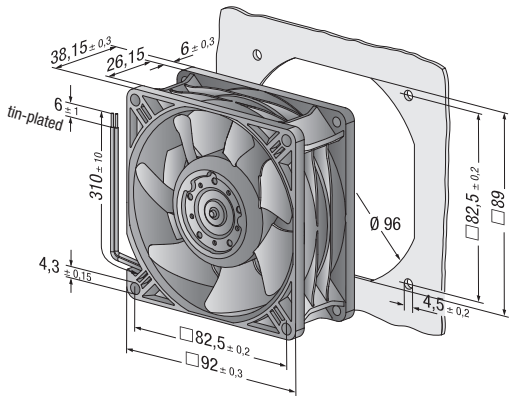

max. 170 m³/h

# DC axial fans

## Series 4400 F 119 x 119 x 25 mm

- **Material:** Housing: GRP[1)] (PBT)
  Impeller: GRP[1)] (PA)
- **Direction of air flow:** Exhaust over struts
- **Direction of rotation:** Counter-clockwise, seen on rotor
- **Connection:** Via single wires AWG 24, TR 64
- **Highlights:** Ball bearings and plain bearings available
- **Mass:** 175 g

- **Possible special versions:**
  (See chapter DC fans - specials)
  - Speed signal
  - Go / No-go alarm
  - Alarm with limit speed
  - External temperature sensor
  - Internal temperature sensor
  - PWM control input
  - Analogue control input
  - Protection against moisture

1) Fibreglass-reinforced plastic

| Nominal data | Air flow | Air flow | Nominal voltage | Voltage range | Sound pressure level | Sound power level | Sintec sleeve bearings / Ball bearings | Input power | Nominal speed | Temperature range | Service life $L_{10}$ (40 °C) ebm-papst Standard / Service life $L_{10}$ ($T_{max}$) ebm-papst Standard | Life expectancy $L_{10IPC}$ (40 °C) see page 17 | Curve |
|---|---|---|---|---|---|---|---|---|---|---|---|---|---|
| **Type** | **m³/h** | **CFM** | **VDC** | **VDC** | **dB(A)** | **Bel(A)** | □/■ | **Watts** | **rpm** | **°C** | **Hours** | **Hours** | |
| 4412 FGL | 94 | 55 | **12** | 7...14 | 26 | 3,9 | □ | 1,3 | 1 600 | -20...+75 | 80 000 / 35 000 | 135 000 | ① |
| 4412 FGML | 114 | 67 | **12** | 7...12,6 | 32 | 4,3 | □ | 2,0 | 1 950 | -20...+75 | 75 000 / 32 500 | 127 500 | ② |
| 4412 FML | 114 | 67 | **12** | 7...12,6 | 32 | 4,3 | ■ | 2,0 | 1 950 | -20...+75 | 75 000 / 32 500 | 127 500 | ② |
| 4412 FGM | 140 | 82 | **12** | 7...12,6 | 38 | 4,8 | □ | 3,2 | 2 400 | -20...+75 | 70 000 / 30 000 | 117 500 | ③ |
| 4412 FM | 140 | 82 | **12** | 7...12,6 | 38 | 4,8 | ■ | 3,2 | 2 400 | -20...+75 | 70 000 / 30 000 | 117 500 | ③ |
| 4412 FG | 170 | 100 | **12** | 8...12,6 | 43 | 5,3 | □ | 5,3 | 2 900 | -20...+60 | 60 000 / 37 500 | 102 500 | ④ |
| 4412 F | 170 | 100 | **12** | 8...12,6 | 43 | 5,3 | ■ | 5,3 | 2 900 | -20...+60 | 60 000 / 37 500 | 102 500 | ④ |
| 4414 FL | 94 | 55 | **24** | 18...28 | 26 | 3,9 | ■ | 1,2 | 1 600 | -20...+75 | 80 000 / 35 000 | 135 000 | ① |
| 4414 FM | 140 | 82 | **24** | 12...28 | 38 | 4,8 | ■ | 3,1 | 2 400 | -20...+75 | 70 000 / 30 000 | 117 500 | ③ |
| 4414 FG | 170 | 100 | **24** | 12...28 | 43 | 5,3 | □ | 5,0 | 2 900 | -20...+60 | 60 000 / 37 500 | 102 500 | ④ |
| 4414 F | 170 | 100 | **24** | 12...28 | 43 | 5,3 | ■ | 5,0 | 2 900 | -20...+60 | 60 000 / 37 500 | 102 500 | ④ |
| 4418 FG | 170 | 100 | **48** | 28...53 | 43 | 5,3 | □ | 5,4 | 2 900 | -20...+60 | 60 000 / 37 500 | 102 500 | ④ |
| 4418 F | 170 | 100 | **48** | 28...53 | 43 | 5,3 | ■ | 5,4 | 2 900 | -20...+60 | 60 000 / 37 500 | 102 500 | ④ |

Subject to alternations

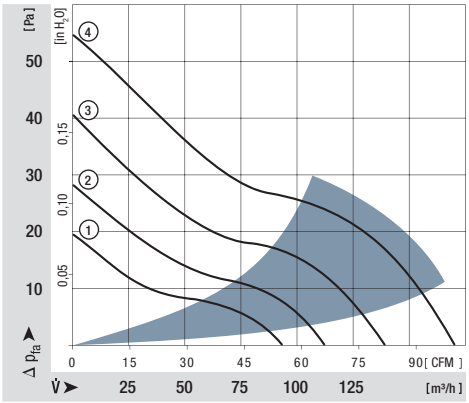


Available on request:
Fan housing with moulded-in spacers. For mounting over both flanges.

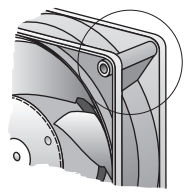

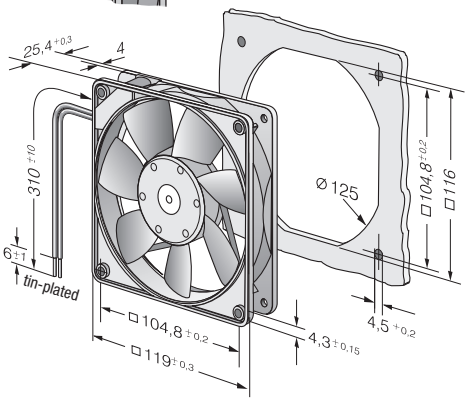




Guard grilles
from p. 238

ebmpapst

max. 225 m³/h

# DC axial fans

## Series 4400 FN 119 x 119 x 25 mm

- **Material:** Housing: GRP[1)] (PBT)
  Impeller: GRP[1)] (PA)
- **Direction of air flow:** Exhaust over struts
- **Direction of rotation:** Counter-clockwise, seen on rotor
- **Connection:** Via single wires AWG 22, TR 64
- **Mass:** 240 g

- **Possible special versions:**
  (See chapter DC fans - specials)
  - Speed signal
  - Go / No-go alarm
  - Alarm with limit speed
  - External temperature sensor
  - Internal temperature sensor
  - PWM control input
  - Analogue control input
  - Protection against moisture

1) Fibreglass-reinforced plastic

| Nominal data | Air flow | Air flow | Nominal voltage | Voltage range | Sound pressure level | Sound power level | Sintec sleeve bearings / Ball bearings | Input power | Nominal speed | Temperature range | Service life $L_{10}$ (40 °C) ebm-papst Standard / Service life $L_{10}$ ($T_{max}$) ebm-papst Standard | Life expectancy $L_{10}$IPC (40 °C) see page 17 | Curve |
|---|---|---|---|---|---|---|---|---|---|---|---|---|---|
| **Type** | **m³/h** | **CFM** | **VDC** | **VDC** | **dB(A)** | **Bel(A)** | □/■ | **Watts** | **rpm** | **°C** | **Hours** | **Hours** | |
| 4412 FNH | 225 | 132 | **12** | 9...13,2 | 55 | 6,7 | ■ | 12 | 5 400 | -20...+70 | 60 000 / 30 000 | 102 500 | ② |
| 4414 FNN | 200 | 118 | **24** | 14...28 | 52 | 6,5 | ■ | 8,3 | 4 850 | -20...+70 | 60 000 / 30 000 | 102 500 | ① |
| 4414 FNH | 225 | 132 | **24** | 18...26,4 | 55 | 6,7 | ■ | 12 | 5 400 | -20...+70 | 60 000 / 30 000 | 102 500 | ② |
| 4418 FNH | 225 | 132 | **48** | 36...53 | 55 | 6,7 | ■ | 12 | 5 400 | -20...+70 | 60 000 / 30 000 | 102 500 | ② |

Subject to alternations

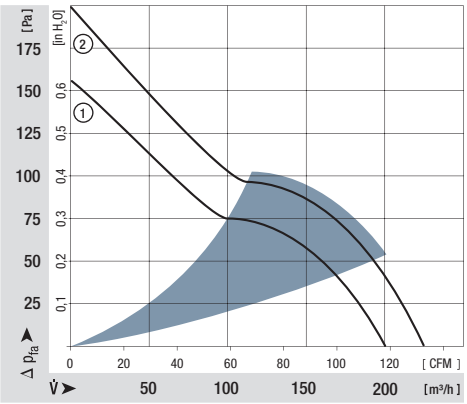


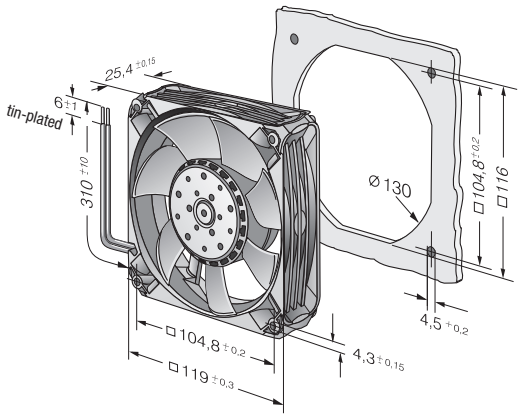

max. 204 m³/h

# DC axial fans

## Series 4300 119 x 119 x 32 mm

- **Material:** Housing: GRP[1)] (PBT)
  Impeller: GRP[1)] (PA)
- **Direction of air flow:** Exhaust over struts
- **Direction of rotation:** Clockwise, seen on rotor
- **Connection:** Via single wires AWG 22, TR 64
- **Highlights:** Ball bearings and plain bearings available
- **Mass:** 220 g

- **Possible special versions:**
  (See chapter DC fans - specials)
  - Speed signal
  - Go / No-go alarm
  - Alarm with limit speed
  - External temperature sensor
  - Internal temperature sensor
  - PWM control input
  - Analogue control input
  - Protection against moisture
  - Protection against salt fog
  - Type of protection: IP 54 / IP 68

1) Fibreglass-reinforced plastic

| Nominal data | Air flow | Air flow | Nominal voltage | Voltage range | Sound pressure level | Sound power level | Sintec sleeve bearings / Ball bearings | Input power | Nominal speed | Temperature range | Service life $L_{10}$ (40 °C) ebm-papst Standard / Service life $L_{10}$ ($T_{max}$) ebm-papst Standard | Life expectancy $L_{10IPC}$ (40 °C) see page 17 | Curve |
|---|---|---|---|---|---|---|---|---|---|---|---|---|---|
| **Type** | **m³/h** | **CFM** | **VDC** | **VDC** | **dB(A)** | **Bel(A)** | □/■ | **Watts** | **rpm** | **°C** | **Hours** | **Hours** | |
| 4312 GL | 95 | 56 | **12** | 6...15 | 30 | 4,3 | □ | 1,2 | 1 550 | -20...+75 | 80 000 / 35 000 | 135 000 | ① |
| 4312 L | 95 | 56 | **12** | 6...15 | 30 | 4,3 | ■ | 1,2 | 1 550 | -20...+75 | 80 000 / 35 000 | 135 000 | ① |
| 4312 GM | 140 | 82 | **12** | 6...15 | 39 | 5,3 | □ | 3,1 | 2 300 | -20...+75 | 70 000 / 30 000 | 117 500 | ② |
| 4312 M | 140 | 82 | **12** | 6...15 | 39 | 5,3 | ■ | 3,1 | 2 300 | -20...+75 | 70 000 / 30 000 | 117 500 | ② |
| 4312 G | 170 | 100 | **12** | 6...15 | 45 | 5,8 | □ | 5,0 | 2 800 | -20...+70 | 62 500 / 30 000 | 105 000 | ③ |
| 4312 | 170 | 100 | **12** | 6...15 | 45 | 5,8 | ■ | 5,0 | 2 800 | -20...+70 | 62 500 / 30 000 | 105 000 | ③ |
| 4312-179 | 204 | 120 | **12** | 6...13,2 | 51 | 6,4 | ■ | 9,4 | 3 400 | -20...+65 | 47 500 / 27 500 | 80 000 | ⑤ |
| 4314 L | 95 | 56 | **24** | 12...28 | 30 | 4,3 | ■ | 1,2 | 1 550 | -20...+75 | 80 000 / 35 000 | 135 000 | ① |
| 4314 M | 140 | 82 | **24** | 12...28 | 39 | 5,3 | ■ | 2,8 | 2 300 | -20...+75 | 70 000 / 30 000 | 117 500 | ② |
| 4314 G | 170 | 100 | **24** | 12...28 | 45 | 5,8 | □ | 4,7 | 2 800 | -20...+75 | 62 500 / 27 500 | 105 000 | ③ |
| 4314 | 170 | 100 | **24** | 12...28 | 45 | 5,8 | ■ | 5,0 | 2 800 | -20...+75 | 62 500 / 27 500 | 105 000 | ③ |
| 4314-147 | 180 | 106 | **24** | 12...28 | 47 | 6,1 | ■ | 4,7 | 3 000 | -20...+75 | 57 500 / 25 000 | 80 000 | ④ |
| 4314-180 | 204 | 120 | **24** | 12...26 | 51 | 6,4 | ■ | 8,5 | 3 400 | -20...+70 | 45 000 / 22 500 | 75 000 | ⑤ |
| 4318 M | 140 | 82 | **48** | 36...56 | 39 | 5,3 | ■ | 3,6 | 2 300 | -20...+75 | 70 000 / 30 000 | 117 500 | ② |
| 4318 | 170 | 100 | **48** | 36...53 | 45 | 5,8 | ■ | 5,1 | 2 800 | -20...+75 | 62 500 / 27 500 | 105 000 | ③ |

Subject to alternations

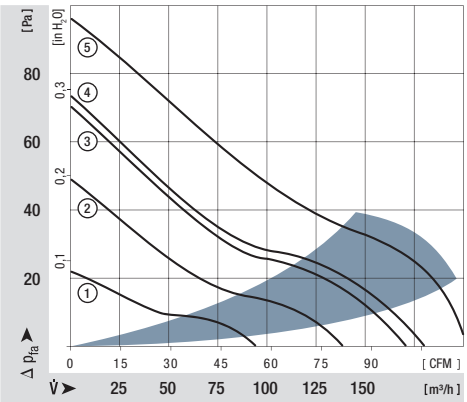


Rotor protrusion max. 0.4 mm.

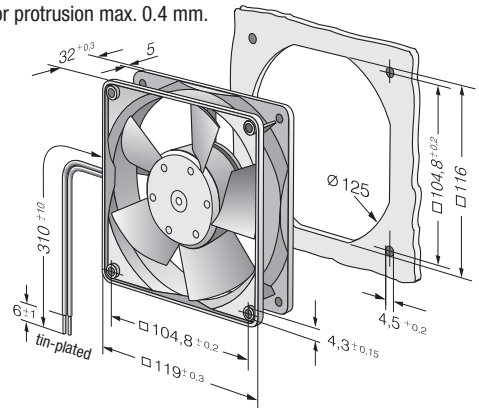




Guard grilles
from p. 238

ebmpapst

max. 170 m³/h

# DC axial fans

## Series 4300 VARIOFAN 119 x 119 x 32 mm

- **Material:** Housing: GRP[1)] (PBT)
  Impeller: GRP[1)] (PA)
- **Direction of air flow:** Exhaust over struts
- **Direction of rotation:** Clockwise, seen on rotor
- **Connection:** Via single wires AWG 22, TR 64
- **Highlights:** Speed automatically adjusted to cooling requirement
- **Mass:** 220 g

- **Possible special versions:**
  (See chapter DC fans - specials)
  - Speed signal
  - Go / No-go alarm
  - Alarm with limit speed
  - External temperature sensor
  - Internal temperature sensor
  - PWM control input
  - Analogue control input
  - Protection against moisture

1) Fibreglass-reinforced plastic

| Nominal data | | Air flow | Air flow | Nominal voltage | Voltage range | Sound pressure level | Sound power level | Sintec sleeve bearings / Ball bearings | Input power | Nominal speed | Temperature range | Service life $L_{10}$ (40 °C) ebm-papst Standard / Service life $L_{10}$ ($T_{max}$) ebm-papst Standard | Life expectancy $L_{10IPC}$ (40 °C) see page 17 | Curve |
|---|---|---|---|---|---|---|---|---|---|---|---|---|---|---|
| Type | | m³/h | CFM | VDC | VDC | dB(A) | Bel(A) | □/■ | Watts | rpm | °C | Hours | Hours | |
| 25°C | 4312 MT | 65 | 38 | 12 | 8...15 | 25 | 3,9 | ■ | 1,1 | 1 100 | -20...+65 | 70 000 / 40 000 | 117 500 | ① |
| 50°C | | 138 | 81 | | | 39 | 5,3 | | 3,3 | 2 300 | | | | ② |
| 25°C | 4312 T | 85 | 50 | 12 | 8...13,2 | 29 | 4,2 | ■ | 1,7 | 1 400 | -20...+65 | 65 000 / 35 000 | 110 000 | ③ |
| 50°C | | 170 | 100 | | | 45 | 5,8 | | 5,0 | 2 800 | | | | ④ |
| 30°C | 4314 T | 85 | 50 | 24 | 18...32 | 29 | 4,2 | ■ | 1,6 | 1 400 | -20...+65 | 65 000 / 35 000 | 110 000 | ③ |
| 50°C | | 170 | 100 | | | 45 | 5,8 | | 4,8 | 2 800 | | | | ④ |

Subject to alternations

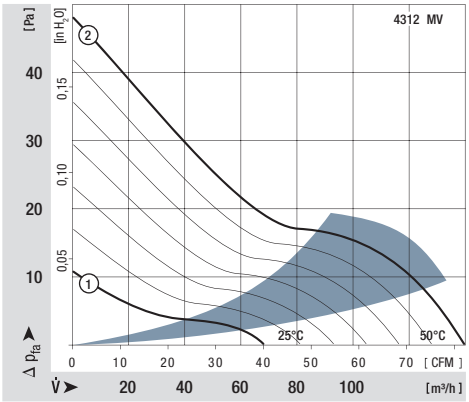


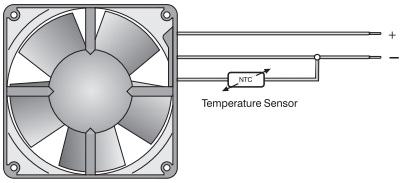


The temperature sensor for controlling the motor speed is not included in delivery. Temperature sensor LZ 370 see accessories.

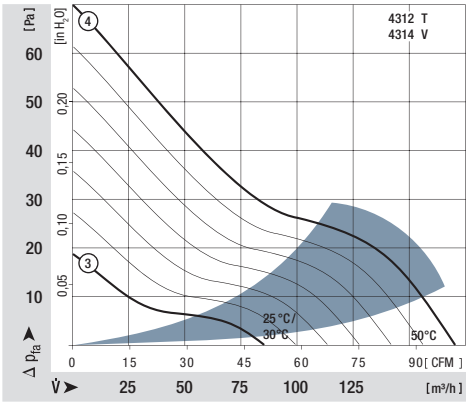


Rotor protrusion max. 0.4 mm.

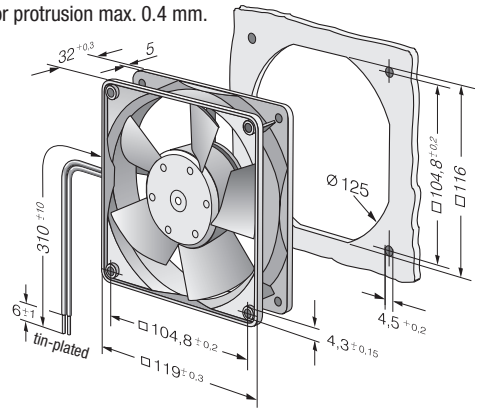

max. 205 m³/h

# DC axial fans

## Series 4400 119 x 119 x 38 mm

- **Material:** Housing: GRP[1)] (PBT)
  Impeller: GRP[1)] (PA)
- **Direction of air flow:** Exhaust over struts
- **Direction of rotation:** Clockwise, seen on rotor
- **Connection:** Via single wires AWG 24, TR 64
- **Mass:** 270 g

- **Possible special versions:**
  (See chapter DC fans - specials)
  - Speed signal
  - Go / No-go alarm
  - Alarm with limit speed
  - External temperature sensor
  - Internal temperature sensor
  - PWM control input
  - Analogue control input
  - Protection against moisture
  - Type of protection: IP 54

1) Fibreglass-reinforced plastic

| Nominal data | Air flow | Air flow | Nominal voltage | Voltage range | Sound pressure level | Sound power level | Sintec sleeve bearings / Ball bearings | Input power | Nominal speed | Temperature range | Service life $L_{10}$ (40 °C) ebm-papst Standard / Service life $L_{10}$ ($T_{max}$) ebm-papst Standard | Life expectancy $L_{10IPC}$ (40 °C) see page 17 | Curve |
|---|---|---|---|---|---|---|---|---|---|---|---|---|---|
| **Type** | **m³/h** | **CFM** | **VDC** | **VDC** | **dB(A)** | **Bel(A)** | □/■ | **Watts** | **rpm** | **°C** | **Hours** | **Hours** | |
| 4412 L | 150 | 88 | **12** | 7...14 | 37 | 5,0 | ■ | 2,2 | 2 700 | -20...+80 | 67 500 / 22 500 | 115 000 | ③ |
| 4412 ML | 168 | 99 | **12** | 7...15 | 40 | 5,1 | ■ | 3,0 | 3 000 | -20...+80 | 67 500 / 22 500 | 115 000 | ④ |
| 4412 M | 184 | 108 | **12** | 7...14 | 42 | 5,3 | ■ | 3,8 | 3 300 | -20...+75 | 65 000 / 25 000 | 110 000 | ⑤ |
| 4412 N | 205 | 121 | **12** | 7...14 | 46 | 5,6 | ■ | 5,3 | 3 650 | -20...+70 | 62 500 / 30 000 | 105 000 | ⑥ |
| 4414 L3 | 100 | 59 | **24** | 12...28 | 26 | 4,0 | ■ | 1,0 | 1 800 | -20...+80 | 75 500 / 22 500 | 127 500 | ① |
| 4414 LL | 124 | 73 | **24** | 12...28 | 33 | 4,5 | ■ | 1,6 | 2 250 | -20...+80 | 70 000 / 22 500 | 117 500 | ② |
| 4414 L | 150 | 88 | **24** | 18...28 | 37 | 5,0 | ■ | 2,4 | 2 700 | -20...+80 | 67 500 / 22 500 | 115 000 | ③ |
| 4414 ML | 168 | 99 | **24** | 12...28 | 40 | 5,1 | ■ | 3,2 | 3 000 | -20...+80 | 67 500 / 22 500 | 115 000 | ④ |
| 4414 M | 184 | 108 | **24** | 18...28 | 42 | 5,3 | ■ | 4,1 | 3 300 | -20...+75 | 65 000 / 25 000 | 110 000 | ⑤ |
| 4414 N | 205 | 121 | **24** | 18...28 | 46 | 5,6 | ■ | 5,4 | 3 650 | -20...+70 | 62 500 / 30 000 | 105 000 | ⑥ |
| 4418 L | 150 | 88 | **48** | 36...60 | 37 | 5,0 | ■ | 2,5 | 2 700 | -20...+75 | 67 500 / 27 500 | 115 000 | ③ |
| 4418 ML | 168 | 99 | **48** | 36...60 | 40 | 5,1 | ■ | 3,2 | 3 000 | -20...+75 | 67 500 / 27 500 | 115 000 | ④ |
| 4418 M | 184 | 108 | **48** | 36...60 | 42 | 5,3 | ■ | 4,2 | 3 300 | -20...+70 | 65 000 / 32 500 | 110 000 | ⑤ |
| 4418 N | 205 | 121 | **48** | 36...60 | 46 | 5,6 | ■ | 5,4 | 3 650 | -20...+70 | 62 500 / 30 000 | 105 000 | ⑥ |

Subject to alternations

Further variants can be found on page 59.

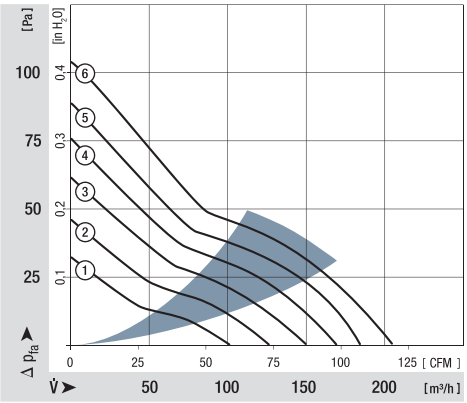


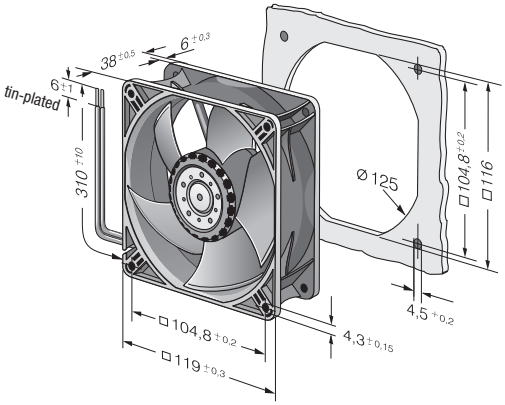




Guard grilles
from p. 238

ebmpapst

max. 285 m³/h

# DC axial fans

## Series 4400 119 x 119 x 38 mm

- **Material:** Housing: GRP[1)] (PBT)
  Impeller: GRP[1)] (PA)
- **Direction of air flow:** Exhaust over struts
- **Direction of rotation:** Clockwise, seen on rotor
- **Connection:** Via single wires AWG 24, TR 64
- **Mass:** 270 g

- **Possible special versions:**
  (See chapter DC fans - specials)
  - Speed signal
  - Go / No-go alarm
  - Alarm with limit speed
  - External temperature sensor
  - Internal temperature sensor
  - PWM control input
  - Analogue control input
  - Protection against moisture
  - Type of protection: IP 54

1) Fibreglass-reinforced plastic

| Nominal data | Air flow | Air flow | Nominal voltage | Voltage range | Sound pressure level | Sound power level | Sintec sleeve bearings / Ball bearings | Input power | Nominal speed | Temperature range | Service life $L_{10}$ (40 °C) ebm-papst Standard / Service life $L_{10}$ ($T_{max}$) ebm-papst Standard | Life expectancy $L_{10IPC}$ (40 °C) see page 17 | Curve |
|---|---|---|---|---|---|---|---|---|---|---|---|---|---|
| **Type** | **m³/h** | **CFM** | **VDC** | **VDC** | **dB(A)** | **Bel(A)** | □/■ | **Watts** | **rpm** | **°C** | **Hours** | **Hours** | |
| 4412 H | 240 | 141 | **12** | 7...14 | 50 | 6,0 | ■ | 8,6 | 4 300 | -20...+70 | 57 500 / 27 500 | 92 500 | ① |
| 4412/2 HHP | 285 | 168 | **12** | 7...14,5 | 55 | 6,4 | ■ | 13,0 | 5 000 | -20...+70 | 50 000 / 25 000 | 85 000 | ② |
| 4414 H | 240 | 141 | **24** | 18...28 | 50 | 6,0 | ■ | 8,6 | 4 300 | -20...+70 | 57 500 / 27 500 | 92 500 | ① |
| 4414 HH | 285 | 165 | **24** | 16...28 | 55 | 6,4 | ■ | 14,0 | 5 000 | -20...+70 | 50 000 / 25 000 | 85 000 | ② |
| 4414/2 HHP | 285 | 168 | **24** | 18...28 | 55 | 6,4 | ■ | 12,0 | 5 000 | -20...+70 | 50 000 / 25 000 | 85 000 | ② |
| 4418 H | 240 | 141 | **48** | 36...60 | 50 | 6,0 | ■ | 8,6 | 4 300 | -20...+70 | 57 500 / 27 500 | 92 500 | ① |
| 4418/2 HHP | 285 | 168 | **48** | 36...60 | 55 | 6,4 | ■ | 13,0 | 5 000 | -20...+70 | 50 000 / 25 000 | 85 000 | ② |

Subject to alternations

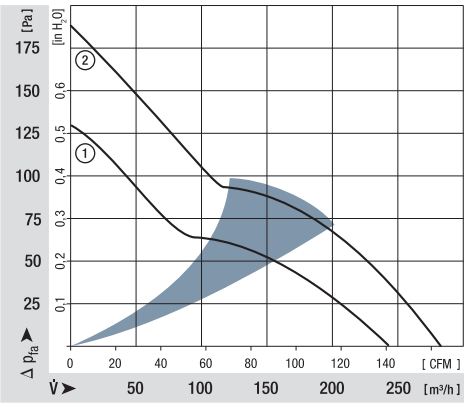


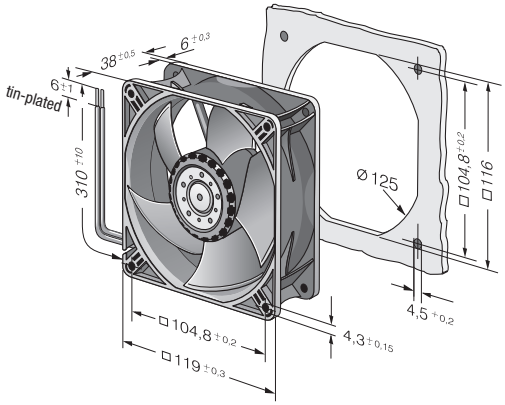




Guard grilles
from p. 238

max. 237 m³/h

# DC axial fans

## Series 4100 N 119 x 119 x 38 mm

- **Material:** Housing: Die-cast aluminium
  Impeller: GRP[1)] (PA)
- **Direction of air flow:** Intake over struts
- **Direction of rotation:** Clockwise, seen on rotor
- **Connection:** On flat connectors, 2.8 x 0.5 mm
  Also available with wires as an option
- **Highlights:** Housing with grounding lug for screw M4 x 8 (Torx)
- **Mass:** 390 g

- **Possible special versions:**
  (See chapter DC fans - specials)
  - Speed signal
  - Go / No-go alarm
  - Alarm with limit speed
  - External temperature sensor
  - Internal temperature sensor
  - PWM control input
  - Analogue control input
  - Protection against moisture
  - Protection against salt fog
  - Type of protection: IP 54 / IP 68

1) Fibreglass-reinforced plastic

| Nominal data | Air flow | Air flow | Nominal voltage | Voltage range | Sound pressure level | Sound power level | Sintec sleeve bearings / Ball bearings | Input power | Nominal speed | Temperature range | Service life $L_{10}$ (40 °C) ebm-papst Standard / Service life $L_{10}$ ($T_{max}$) ebm-papst Standard | Life expectancy $L_{10IPC}$ (40 °C) see page 17 | Curve |
|---|---|---|---|---|---|---|---|---|---|---|---|---|---|
| **Type** | **m³/h** | **CFM** | **VDC** | **VDC** | **dB(A)** | **Bel(A)** | □/■ | **Watts** | **rpm** | **°C** | **Hours** | **Hours** | |
| 4182 NGX | 160 | 94 | **12** | 6...15 | 44 | 5,3 | □ | 3,7 | 2 800 | -20...+75 | 85 000 / 37 500 | 142 500 | ① |
| 4182 NX | 180 | 106 | **12** | 6...15 | 49 | 5,7 | ■ | 4,9 | 3 200 | -30...+75 | 85 000 / 37 500 | 142 500 | ② |
| 4182 NXH | 237 | 140 | **12** | 7...14 | 57 | 6,5 | ■ | 11,0 | 4 400 | -30...+55 | 70 000 / 50 000 | 117 500 | ③ |
| 4184 NGX | 160 | 94 | **24** | 12...31,5 | 44 | 5,3 | □ | 3,3 | 2 800 | -20...+75 | 85 000 / 37 500 | 142 500 | ① |
| 4184 NXM | 160 | 94 | **24** | 12...31,5 | 44 | 5,3 | ■ | 3,2 | 2 800 | -30...+75 | 85 000 / 37 500 | 142 500 | ① |
| 4184 NX | 180 | 106 | **24** | 12...31,5 | 49 | 5,7 | ■ | 4,9 | 3 200 | -30...+70 | 85 000 / 42 500 | 142 500 | ② |
| 4184 NXH | 237 | 140 | **24** | 12...28 | 57 | 6,5 | ■ | 11,0 | 4 400 | -30...+70 | 70 000 / 35 000 | 117 500 | ③ |
| 4188 NGX | 160 | 94 | **48** | 36...60 | 44 | 5,3 | □ | 3,6 | 2 800 | -20...+75 | 85 000 / 37 500 | 142 500 | ① |
| 4188 NXM | 160 | 94 | **48** | 36...60 | 44 | 5,3 | ■ | 3,5 | 2 800 | -30...+75 | 85 000 / 37 500 | 142 500 | ① |

Subject to alternations

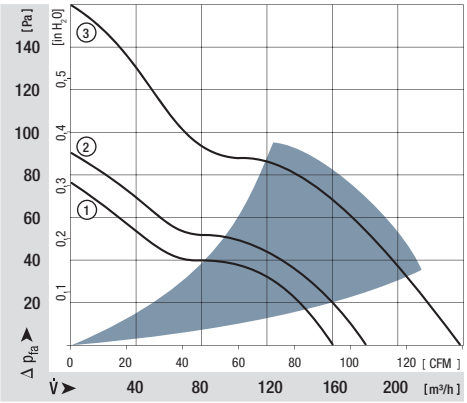


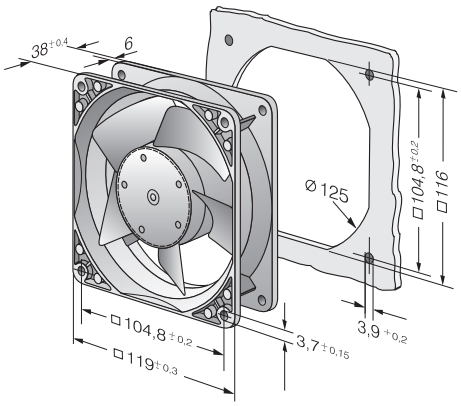




Guard grilles from p. 238

Connection cables from p. 251

ebmpapst

max. 440 m³/h

# DC axial fans

## Series 4100 N High Performance 119 x 119 x 38 mm

- **Material:** Housing: Die-cast aluminium
  Impeller: GRP[1)] (PA)
- **Direction of air flow:** Intake over struts
- **Direction of rotation:** Clockwise, seen on rotor
- **Connection:** Via single wires AWG 22 UL 1007, TR 64
- **Highlights:** Housing with grounding lug for screw M4 x 8 (Torx)
- **Mass:** 390 g

- **Possible special versions:**
  (See chapter DC fans - specials)
  - Speed signal
  - Go / No-go alarm
  - Alarm with limit speed
  - External temperature sensor
  - Internal temperature sensor
  - PWM control input
  - Analogue control input
  - Protection against moisture
  - Protection against salt fog
  - Type of protection: IP 54 / IP 68

1) Fibreglass-reinforced plastic

| Nominal data | Air flow | Air flow | Nominal voltage | Voltage range | Sound pressure level | Sound power level | Sintec sleeve bearings / Ball bearings | Input power* | Nominal speed | Temperature range | Service life $L_{10}$ (40 °C) ebm-papst Standard / Service life $L_{10}$ ($T_{max}$) ebm-papst Standard | Life expectancy $L_{10IPC}$ (40 °C) see page 17 | Curve |
|---|---|---|---|---|---|---|---|---|---|---|---|---|---|
| **Type** | **m³/h** | **CFM** | **VDC** | **VDC** | **dB(A)** | **Bel(A)** | □/■ | **Watts** | **rpm** | **°C** | **Hours** | **Hours** | |
| 4112 NHH | 260 | 153 | **12** | 9...15 | 60 | 6,8 | ■ | 13,3 | 5 000 | -20...+65 | 70 000 / 55 000 | 117 500 | ① |
| 4112 NH3 | 310 | 182 | **12** | 9...15 | 65 | 7,2 | ■ | 21,6 | 6 000 | -20...+65 | 65 000 / 37 500 | 110 000 | ② |
| 4112 NH4 | 355 | 209 | **12** | 9...14 | 67 | 7,4 | ■ | 32,0 | 6 800 | -20...+65 | 62 500 / 35 000 | 105 000 | ③ |
| 4114 NHH | 260 | 153 | **24** | 16...30 | 60 | 6,8 | ■ | 12,4 | 5 000 | -20...+65 | 70 000 / 52 500 | 117 500 | ① |
| 4114 NH3 | 310 | 182 | **24** | 16...30 | 65 | 7,2 | ■ | 19,5 | 6 000 | -20...+65 | 65 000 / 37 500 | 110 000 | ② |
| 4114 NH4 | 355 | 209 | **24** | 16...30 | 67 | 7,4 | ■ | 30,0 | 6 800 | -20...+65 | 62 500 / 35 000 | 105 000 | ③ |
| 4114 NH5 *S-Force* | 390 | 230 | **24** | 16...30 | 70 | 7,6 | ■ | 45,0* | 7 500 | -20...+65 | 62 500 / 35 000 | 105 000 | ④ |
| 4114 NH6 *S-Force* | 440 | 259 | **24** | 16...30 | 73 | 8,1 | ■ | 65,0* | 8 400 | -20...+65 | 60 000 / 32 500 | 102 500 | ⑤ |
| 4118 NHH | 260 | 153 | **48** | 36...60 | 60 | 6,8 | ■ | 12,0 | 5 000 | -20...+65 | 70 000 / 52 500 | 117 500 | ① |
| 4118 NH3 | 310 | 182 | **48** | 36...60 | 65 | 7,2 | ■ | 20,0 | 6 000 | -20...+65 | 65 000 / 37 500 | 110 000 | ② |
| 4118 NH4 | 355 | 209 | **48** | 36...60 | 67 | 7,4 | ■ | 28,0 | 6 800 | -20...+65 | 62 500 / 35 000 | 105 000 | ③ |
| 4118 NH5 *S-Force* | 390 | 230 | **48** | 36...60 | 70 | 7,6 | ■ | 45,0* | 7 500 | -20...+65 | 62 500 / 35 000 | 105 000 | ④ |
| 4118 NH6 *S-Force* | 440 | 259 | **48** | 36...60 | 73 | 8,1 | ■ | 62,0* | 8 400 | -20...+65 | 60 000 / 32 500 | 102 500 | ⑤ |

Subject to alternations

* Input power at free air flow, these values can be significantly higher in the operating point.

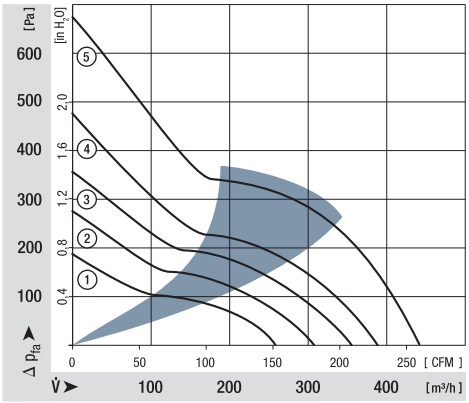


*** Input power - in operation**

| Fan type | optimum operating range (W) |
|---|---|
| 4114 NH5 | 55 |
| 4114 NH6 | 95 |
| 4118 NH5 | 55 |
| 4118 NH6 | 95 |

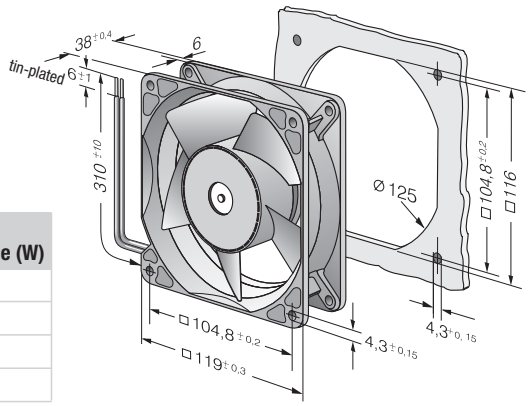

max. 570 m³/h

S-Force

# DC axial fans

Series 4100 N High Performance 119 x 119 x 38 mm

- **Material:** Housing: Die-cast aluminium
  Impeller: GRP[1)] (PA)
- **Direction of air flow:** Intake over struts
- **Direction of rotation:** Clockwise, seen on rotor
- **Connection:** Via single wires AWG 18, 20 or AWG 22, TR 64, speed signal and control input AWG 22
- **Highlights:** 3-phase fan drive with very smooth running and high efficiency
  Housing with grounding lug for screw M4 x 8 (Torx)
- **Mass:** 425 g

1) Fibreglass-reinforced plastic

- **Possible special versions:**
  (See chapter DC fans - specials)
  - Speed signal
  - Go / No-go alarm
  - Alarm with limit speed
  - External temperature sensor
  - Internal temperature sensor
  - PWM control input
  - Analogue control input
  - Protection against moisture
  - Protection against salt fog

| Nominal data | Air flow | Air flow | Nominal voltage | Voltage range | Sound pressure level | Sound power level | Sintec sleeve bearings / Ball bearings | Input power** | Nominal speed | Temperature range | Service life $L_{10}$ (40 °C) ebm-papst Standard / Service life $L_{10}$ ($T_{max}$) ebm-papst Standard | Life expectancy $L_{10IPC}$ (40 °C) see page 17 | Curve |
|---|---|---|---|---|---|---|---|---|---|---|---|---|---|
| **Type** | **m³/h** | **CFM** | **VDC** | **VDC** | **dB(A)** | **Bel(A)** | □/■ | **Watts** | **rpm** | **°C** | **Hours** | **Hours** | |
| 4114 N/2H7P | 500 | 294 | **24** | 16...30 | 76 | 8,5 | ■ | 90 | 9 500 | -20...+75 | 57 500 / 25 000 | 97 500 | ① |
| 4114 N/2H8P | 570 | 336 | **24** | 16...30 | 78 | 8,9 | ■ | 120 | 11 000 | -20...+75 | 55 000 / 22 500 | 92 500 | ② |
| 4118 N/2H7P | 500 | 294 | **48** | 36...60* | 76 | 8,5 | ■ | 90 | 9 500 | -20...+75 | 57 500 / 25 000 | 97 500 | ① |
| 4118 N/2H8P | 570 | 336 | **48** | 36...60* | 78 | 8,9 | ■ | 120 | 11 000 | -20...+75 | 55 000 / 22 500 | 92 500 | ② |

Subject to alternations

* 36...72 VDC on request.

Speed control range from 500 rpm up to maximum nominal speed. Stationary at 0 % PWM, maximum speed at sensor break.
To attain the specified service life, an external capacitor must be wired between the plus and minus strands.
Please note the wiring suggestion on page 16.
** Input power at free air flow, these values can be significantly higher in the operating point.

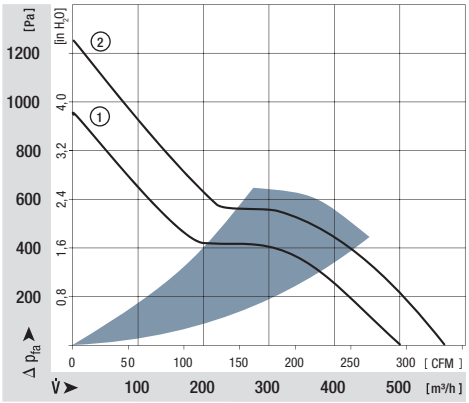


**** Input power - in operation**

| Fan type | optimum operating range (W) |
|---|---|
| 4114 NH7P | 100 |
| 4114 NH8P | 160 |
| 4118 NH7P | 100 |
| 4118 NH8P | 160 |

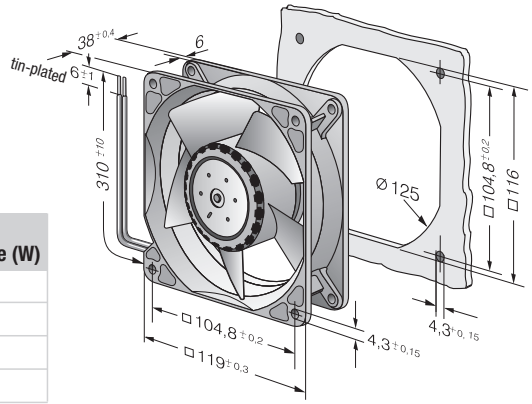




Guard grilles
from p. 238

ebmpapst

max. 280 m³/h

# DC diagonal fans

## Series DV 4100 119 x 119 x 38 mm

- **Material:** Housing: GRP[1)] (PBT)
  Available in Die-cast aluminium
  Impeller: GRP[1)] (PA)
- **Direction of air flow:** Exhaust over struts
- **Direction of rotation:** Counter-clockwise, seen on rotor
- **Connection:** Via single wires AWG 22, TR 64
- **Highlights:** Housing with grounding lug for screw M4 x 8 (Torx)
- **Mass:** 375 g
  (with metal housing: 455 g)

1) Fibreglass-reinforced plastic

- **Possible special versions:**
  (See chapter DC fans - specials)
  - Speed signal
  - Go / No-go alarm
  - Alarm with limit speed
  - External temperature sensor
  - Internal temperature sensor
  - PWM control input
  - Analogue control input
  - Protection against moisture
  - Protection against salt fog
  - Type of protection: IP 54 / IP 68

| Nominal data | Air flow | Air flow | Nominal voltage | Voltage range | Sound pressure level | Sound power level | Sintec sleeve bearings / Ball bearings | Input power* | Nominal speed | Temperature range | Service life $L_{10}$ (40 °C) ebm-papst Standard / Service life $L_{10}$ ($T_{max}$) ebm-papst Standard | Life expectancy $L_{10IPC}$ (40 °C) see page 17 | Curve |
|---|---|---|---|---|---|---|---|---|---|---|---|---|---|
| **Type** | **m³/h** | **CFM** | **VDC** | **VDC** | **dB(A)** | **Bel(A)** | □/■ | **Watts** | **rpm** | **°C** | **Hours** | **Hours** | |
| DV 4112 N | 280 | 165 | **12** | 9...15 | 61 | 6,9 | ■ | 21,0 | 6 000 | -20...+65 | 70 000 / 40 000 | 117 500 | ① |
| DV 4114 N | 280 | 165 | **24** | 16...30 | 61 | 6,9 | ■ | 20,5 | 6 000 | -20...+65 | 70 000 / 40 000 | 117 500 | ① |
| DV 4118 N | 280 | 165 | **48** | 36...60 | 61 | 6,9 | ■ | 20,0 | 6 000 | -20...+65 | 70 000 / 40 000 | 117 500 | ① |

Subject to alternations

* Input power at free air flow, these values can be significantly higher in the operating point.

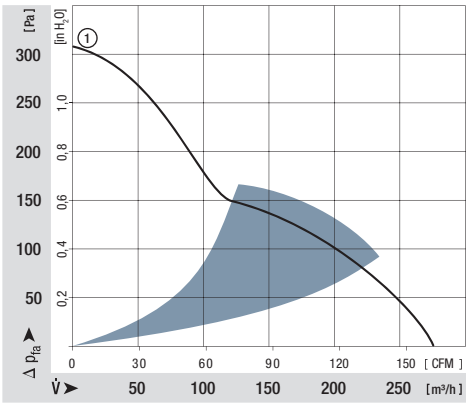


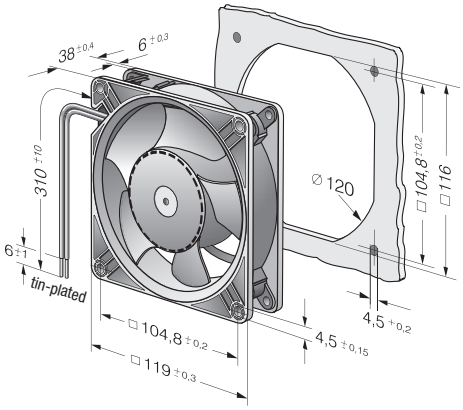

max. 340 m³/h

# DC axial fans

## Series 5200 N 127 x 127 x 38 mm

- **Material:** Housing: GRP[1)] (PBT)
  Impeller: GRP[1)] (PA)
- **Direction of air flow:** Exhaust over struts
- **Direction of rotation:** Counter-clockwise, seen on rotor
- **Connection:** Via single wires AWG 22, TR 64
- **Mass:** 310 g

1) Fibreglass-reinforced plastic

- **Possible special versions:**
  (See chapter DC fans - specials)
  - Speed signal
  - Go / No-go alarm
  - Alarm with limit speed
  - External temperature sensor
  - Internal temperature sensor
  - PWM control input
  - Analogue control input
  - Protection against moisture
  - Protection against salt fog
  - Type of protection: IP 54 / IP 68

| Nominal data | Air flow | Air flow | Nominal voltage | Voltage range | Sound pressure level | Sound power level | Sintec sleeve bearings / Ball bearings | Input power** | Nominal speed | Temperature range | Service life $L_{10}$ (40 °C) ebm-papst Standard / Service life $L_{10}$ ($T_{max}$) ebm-papst Standard | Life expectancy $L_{10IPC}$ (40 °C) see page 17 | Curve |
|---|---|---|---|---|---|---|---|---|---|---|---|---|---|
| **Type** | **m³/h** | **CFM** | **VDC** | **VDC** | **dB(A)** | **Bel(A)** | □/■ | **Watts** | **rpm** | **°C** | **Hours** | **Hours** | |
| 5212 NM | 187 | 110 | **12** | 7...14,5 | 43 | 5,3 | ■ | 4,1 | 2 750 | -20...+75 | 62 500 / 27 500 | 105 000 | ① |
| 5212 NN | 216 | 127 | **12** | 7...14 | 46 | 5,6 | ■ | 6,2 | 3 150 | -20...+70 | 57 500 / 25 000 | 97 500 | ② |
| 5212 NH | 252 | 148 | **12** | 7...14 | 51 | 6,0 | ■ | 9,8 | 3 650 | -20...+70 | 45 000 / 22 500 | 75 000 | ③ |
| 5212 NHH* | 340 | 200 | **12** | 9...15 | 58 | 6,6 | ■ | 19,0 | 4 900 | -20...+65 | 45 000 / 25 000 | 75 000 | ④ |
| 5214 NM | 187 | 110 | **24** | 12...28 | 43 | 5,3 | ■ | 4,6 | 2 750 | -20...+75 | 62 500 / 27 500 | 105 000 | ① |
| 5214 NN | 216 | 127 | **24** | 12...28 | 46 | 5,6 | ■ | 6,0 | 3 150 | -20...+75 | 57 500 / 25 000 | 97 500 | ② |
| 5214 NH | 252 | 148 | **24** | 12...28 | 51 | 6,0 | ■ | 9,8 | 3 650 | -20...+70 | 45 000 / 22 500 | 75 000 | ③ |
| 5214 NHH* | 340 | 200 | **24** | 16...30 | 58 | 6,6 | ■ | 17,5 | 4 900 | -20...+65 | 45 000 / 25 000 | 75 000 | ④ |
| 5218 NM | 187 | 110 | **48** | 36...56 | 43 | 5,3 | ■ | 4,5 | 2 750 | -20...+75 | 62 500 / 27 500 | 105 000 | ① |
| 5218 NN | 216 | 127 | **48** | 36...56 | 46 | 5,6 | ■ | 6,2 | 3 150 | -20...+70 | 57 500 / 32 500 | 97 500 | ② |
| 5218 NH | 252 | 148 | **48** | 36...56 | 51 | 6,0 | ■ | 9,6 | 3 650 | -20...+55 | 45 000 / 32 500 | 75 000 | ③ |
| 5218 NHH* | 340 | 200 | **48** | 36...60 | 58 | 6,6 | ■ | 18,0 | 4 900 | -20...+65 | 45 000 / 25 000 | 75 000 | ④ |

Subject to alternations

** Input power at free air flow, these values can be significantly higher in the operating point.

***Models NHH:** Fan housing with moulded-in spacers.

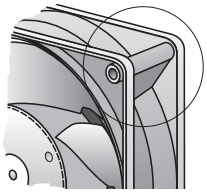

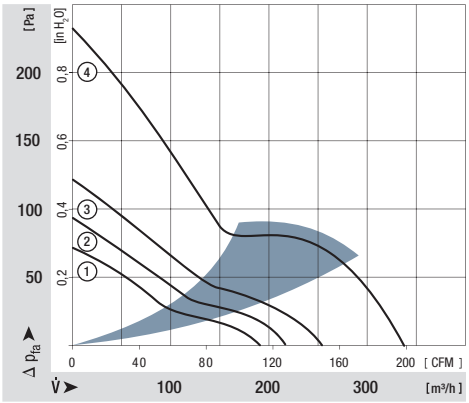


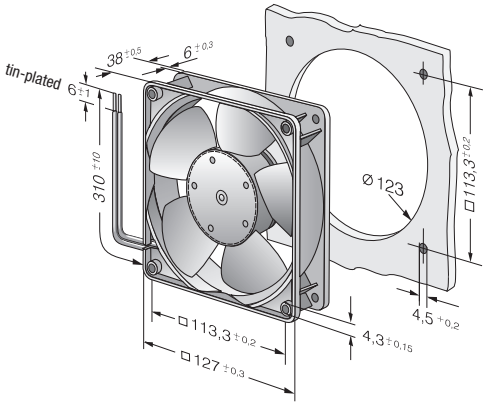




Guard grilles
from p. 238

ebmpapst

max. 320 m³/h

# DC diagonal fans

## Series DV 5200 127 x 127 x 38 mm

- **Material:** Housing: GRP[1)] (PBT)
  Available in Die-cast aluminium
  Metal flange
  Impeller: GRP[1)] (PA)
- **Direction of air flow:** Exhaust over struts
- **Direction of rotation:** Counter-clockwise, seen on rotor
- **Connection:** Via single wires AWG 22, TR 64
- **Highlights:** Housing with grounding lug for screw M4 x 8 (Torx)
- **Mass:** 415 g (with metal housing: 490 g)

1) Fibreglass-reinforced plastic

- **Possible special versions:**
  (See chapter DC fans - specials)
  - Speed signal
  - Go / No-go alarm
  - Alarm with limit speed
  - External temperature sensor
  - Internal temperature sensor
  - PWM control input
  - Analogue control input
  - Protection against moisture
  - Protection against salt fog
  - Type of protection: IP 54 / IP 68

| Nominal data | Air flow | Air flow | Nominal voltage | Voltage range | Sound pressure level | Sound power level | Sintec sleeve bearings / Ball bearings | Input power* | Nominal speed | Temperature range | Service life $L_{10}$ (40 °C) ebm-papst Standard / Service life $L_{10}$ ($T_{max}$) ebm-papst Standard | Life expectancy $L_{10IPC}$ (40 °C) see page 17 | Curve |
|---|---|---|---|---|---|---|---|---|---|---|---|---|---|
| **Type** | **m³/h** | **CFM** | **VDC** | **VDC** | **dB(A)** | **Bel(A)** | □/■ | **Watts** | **rpm** | **°C** | **Hours** | **Hours** | |
| DV 5212 N | 270 | 159 | **12** | 9...15 | 56 | 6,4 | ■ | 21,0 | 5 000 | -20...+65 | 70 000 / 40 000 | 117 500 | ① |
| DV 5214 N | 270 | 159 | **24** | 16...30 | 56 | 6,4 | ■ | 20,4 | 5 000 | -20...+65 | 70 000 / 40 000 | 117 500 | ① |
| DV 5218 N | 270 | 159 | **48** | 36...60 | 56 | 6,4 | ■ | 18,5 | 5 000 | -20...+65 | 70 000 / 40 000 | 117500 | ① |
| **Model comes standard with speed signal and PWM control input. Other versions by request.** | | | | | | | | | | | | | |
| DV 5214/2 HP | 320 | 188 | **24** | 16...30 | 62 | 7,2 | ■ | 38,5 | 6 000 | -20...+65 | 62 500 / 35 000 | 105 000 | ② |

Subject to alternations

Speed control range from 1000 rpm up to maximum nominal speed. Stationary at 0 % PWM, maximum speed at sensor break.
* Input power at free air flow, these values can be significantly higher in the operating point.

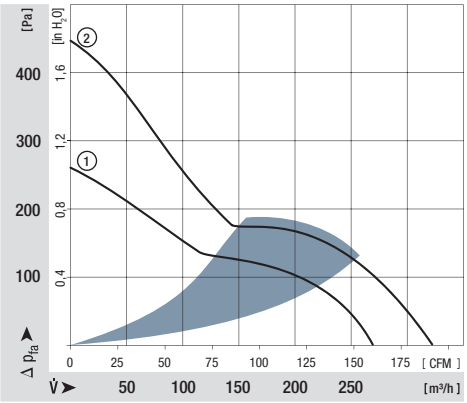


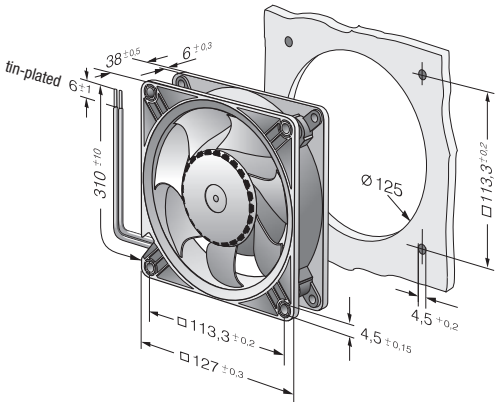

max. 260 m³/h

# DC axial fans

## Series 5100 N 135 x 135 x 38 mm

- **Material:** Housing: Die-cast aluminium
  Impeller: Painted sheet steel
- **Direction of air flow:** Exhaust over struts
- **Direction of rotation:** Counter-clockwise, seen on rotor
- **Connection:** Via single wires AWG 22, TR 64
- **Highlights:** Housing with grounding lug for screw M4 x 8 (Torx)
  48 V version incl. screws
- **Mass:** 650 g

- **Possible special versions:**
  (See chapter DC fans - specials)
  - Speed signal
  - Go / No-go alarm
  - Alarm with limit speed
  - External temperature sensor
  - Internal temperature sensor
  - PWM control input
  - Analogue control input
  - Protection against moisture
  - Protection against salt fog
  - Type of protection: IP 54

1) Fibreglass-reinforced plastic

| Nominal data | Air flow | Air flow | Nominal voltage | Voltage range | Sound pressure level | Sound power level | Sintec sleeve bearings / Ball bearings | Input power* | Nominal speed | Temperature range | Service life $L_{10}$ (40 °C) ebm-papst Standard / Service life $L_{10}$ ($T_{max}$) ebm-papst Standard | Life expectancy $L_{10IPC}$ (40 °C) see page 17 | Curve |
|---|---|---|---|---|---|---|---|---|---|---|---|---|---|
| **Type** | **m³/h** | **CFM** | **VDC** | **VDC** | **dB(A)** | **Bel(A)** | □/■ | **Watts** | **rpm** | **°C** | **Hours** | **Hours** | |
| 5112 N | 260 | 153 | **12** | 6...15 | 48 | 6,1 | ■ | 9,5 | 2 900 | -25...+72 | 80 000 / 37 500 | 135 000 | ① |
| 5114 N | 260 | 153 | **24** | 12...30 | 48 | 6,1 | ■ | 9,5 | 2 900 | -25...+72 | 80 000 / 37 500 | 135 000 | ① |
| 5118 N | 260 | 153 | **48** | 24...60 | 48 | 6,1 | ■ | 9,5 | 2 900 | -25...+72 | 80 000 / 37 500 | 135 000 | ① |

Subject to alternations

* Input power at free air flow, these values can be significantly higher in the operating point.

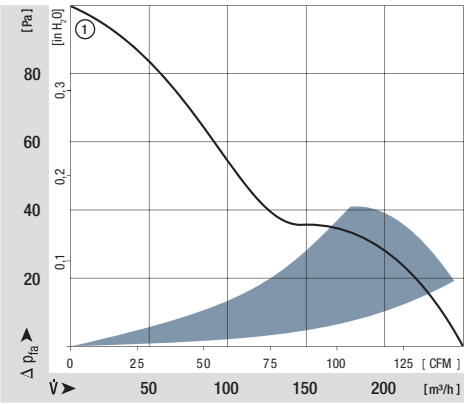


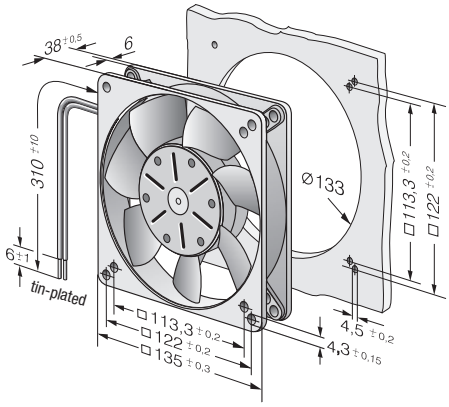




Guard grilles
from p. 238

ebmpapst

max. 340 m³/h

S-Force

# DC axial fans

## Series 5300 140 x 140 x 51 mm

- **Material:** Housing: Die-cast aluminium
  Impeller: GRP[1)] (PA)
- **Direction of air flow:** Intake over struts
- **Direction of rotation:** Counter-clockwise, seen on rotor
- **Connection:** Via single wires AWG 22, TR 64
- **Highlights:** Housing with grounding lug for screw M4 x 8 (Torx)
- **Mass:** 900 g

- **Possible special versions:**
  (See chapter DC fans - specials)
  - Speed signal
  - Go / No-go alarm
  - Alarm with limit speed
  - External temperature sensor
  - Internal temperature sensor
  - PWM control input
  - Analogue control input
  - Protection against moisture
  - Protection against salt fog
  - Type of protection: IP 54

1) Fibreglass-reinforced plastic

| Nominal data | Air flow | Air flow | Nominal voltage | Voltage range | Sound pressure level | Sound power level | Sintec sleeve bearings / Ball bearings | Input power* | Nominal speed | Temperature range | Service life $L_{10}$ (40 °C) ebm-papst Standard / Service life $L_{10}$ ($T_{max}$) ebm-papst Standard | Life expectancy $L_{10IPC}$ (40 °C) see page 17 | Curve |
|---|---|---|---|---|---|---|---|---|---|---|---|---|---|
| **Type** | **m³/h** | **CFM** | **VDC** | **VDC** | **dB(A)** | **Bel(A)** | □/■ | **Watts** | **rpm** | **°C** | **Hours** | **Hours** | |
| 5314/2 HP | 340 | 200 | **24** | 16...28 | 64 | 7,2 | ■ | 28,4 | 5 000 | -20...+65 | 77 500 / 40 000 | 130 000 | ① |
| 5318/2 HP | 340 | 200 | **48** | 36...72 | 64 | 7,2 | ■ | 27 | 5 000 | -20...+65 | 77 500 / 40 000 | 130 000 | ① |

Subject to alternations

Speed control range from 700 rpm up to maximum nominal speed. Stationary at 0 % PWM, maximum speed at sensor break.
* Input power at free air flow, these values can be significantly higher in the operating point.

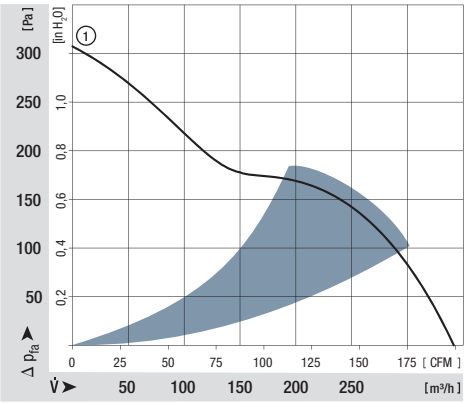


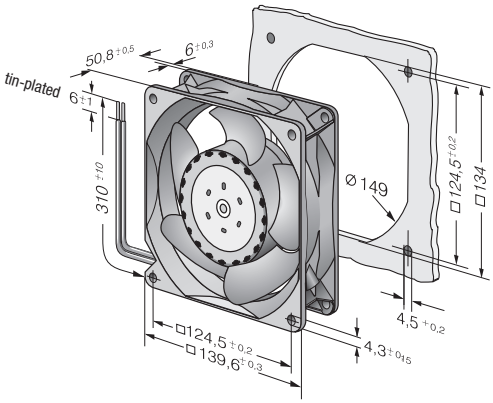

max. 670 m³/h

S-Force

# DC axial fans

## Series 5300 TD 140 x 140 x 51 mm

- **Material:** Housing: Die-cast aluminium
  Impeller: GRP[1)] (PA)
- **Direction of air flow:** Intake over struts
- **Direction of rotation:** Counter-clockwise, seen on rotor
- **Connection:** Via single wires AWG 20 and AWG 22, TR 64
- **Highlights:** 3-phase fan drive with very smooth running and high efficiency
- **Mass:** 900 g

1) Fibreglass-reinforced plastic

- **Possible special versions:**
  (See chapter DC fans - specials)
  - Speed signal
  - Go / No-go alarm
  - Alarm with limit speed
  - External temperature sensor
  - Internal temperature sensor
  - PWM control input
  - Analogue control input
  - Multi-option control input
  - Protection against moisture
  - Protection against salt fog
  - Type of protection: IP 54 / IP 68

| Nominal data | Air flow | Air flow | **Nominal voltage** | Voltage range | Sound pressure level | Sound power level | Sintec sleeve bearings / Ball bearings | Input power* | Nominal speed | Temperature range | Service life $L_{10}$ (40 °C) ebm-papst Standard / Service life $L_{10}$ ($T_{max}$) ebm-papst Standard | Life expectancy $L_{10IPC}$ (40 °C) see page 17 | Curve |
|---|---|---|---|---|---|---|---|---|---|---|---|---|---|
| **Type** | **m³/h** | **CFM** | **VDC** | **VDC** | **dB(A)** | **Bel(A)** | □/■ | **Watts** | **rpm** | **°C** | **Hours** | **Hours** | |
| 5312/2 TDHP | 410 | 241 | **12** | 8...16 | 70 | 7,7 | ■ | 43 | 6 000 | -20...+70 | 70 000 / 35 000 | 117 500 | ① |
| 5314/2 TDHP | 410 | 241 | **24** | 16...36 | 70 | 7,7 | ■ | 42 | 6 000 | -20...+70 | 70 000 / 35 000 | 117 500 | ① |
| 5314/2 TDHHP | 490 | 288 | **24** | 16...36 | 75 | 8,1 | ■ | 67 | 7 000 | -20...+70 | 62 500 / 30 000 | 105 000 | ② |
| 5318/2 TDHP | 410 | 241 | **48** | 36...72 | 70 | 7,7 | ■ | 42 | 6 000 | -20...+70 | 70 000 / 35 000 | 117 500 | ① |
| 5318/2 TDHHP | 490 | 288 | **48** | 36...72 | 75 | 8,1 | ■ | 66 | 7 000 | -20...+70 | 62 500 / 30 000 | 105 000 | ② |
| 5318/2 TDH4P | 670 | 394 | **48** | 36...72 | 79 | 8,8 | ■ | 149 | 9 200 | -20...+65 | 57 500 / 32 500 | 97 500 | ③ |

Subject to alternations

Speed control range from 1000 rpm up to maximum nominal speed. Stationary at 0 % PWM, maximum speed at sensor break.
* Input power at free air flow, these values can be significantly higher in the operating point.

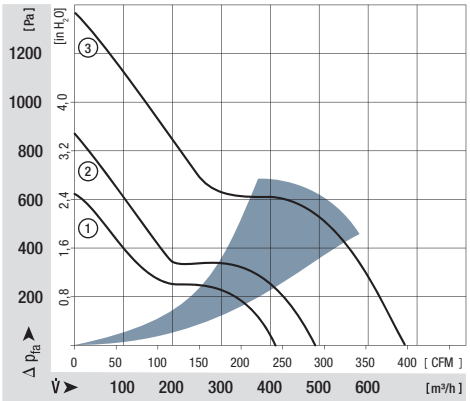


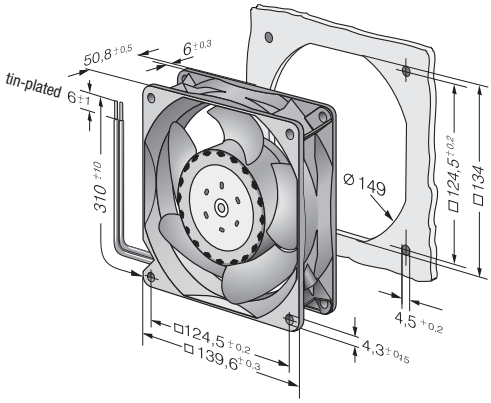




Guard grilles
from p. 238

ebmpapst

max. 360 m³/h

# DC axial fans

## Series 7100 N Ø 150 x 38 mm

- **Material:** Housing: Die-cast aluminium
  Impeller: Painted sheet steel
- **Direction of air flow:** Exhaust over struts
- **Direction of rotation:** Counter-clockwise, seen on rotor
- **Connection:** Via single wires AWG 22, TR 64
- **Highlights:** Housing with grounding lug for screw M4 x 8 (Torx)
- **Mass:** 620 g

- **Possible special versions:**
  (See chapter DC fans - specials)
  - Speed signal
  - Go / No-go alarm
  - Alarm with limit speed
  - External temperature sensor
  - Internal temperature sensor
  - PWM control input
  - Analogue control input
  - Protection against moisture
  - Protection against salt fog
  - Type of protection: IP 54 / IP 68

| Nominal data | Air flow | Air flow | Nominal voltage | Voltage range | Sound pressure level | Sound power level | Sintec sleeve bearings / Ball bearings | Input power* | Nominal speed | Temperature range | Service life $L_{10}$ (40 °C) ebm-papst Standard / Service life $L_{10}$ ($T_{max}$) ebm-papst Standard | Life expectancy $L_{10IPC}$ (40 °C) see page 17 | Curve |
|---|---|---|---|---|---|---|---|---|---|---|---|---|---|
| **Type** | **m³/h** | **CFM** | **VDC** | **VDC** | **dB(A)** | **Bel(A)** | □/■ | **Watts** | **rpm** | **°C** | **Hours** | **Hours** | |
| 7112 N | 308 | 181 | **12** | 6...15 | 53 | 6,2 | ■ | 12,0 | 2 850 | -25...+72 | 80 000 / 37 500 | 135 000 | ① |
| 7114 N | 308 | 181 | **24** | 12...30 | 53 | 6,2 | ■ | 12,0 | 2 850 | -25...+72 | 80 000 / 37 500 | 135 000 | ① |
| 7114 NH | 360 | 212 | **24** | 12...26,5 | 58 | 6,7 | ■ | 19,0 | 3 350 | -25...+72 | 75 000 / 35 000 | 127 500 | ② |
| 7118 N | 308 | 181 | **48** | 24...60 | 53 | 6,2 | ■ | 12,0 | 2 850 | -25...+72 | 80 000 / 37 500 | 135 000 | ① |

Subject to alternations

* Input power at free air flow, these values can be significantly higher in the operating point.

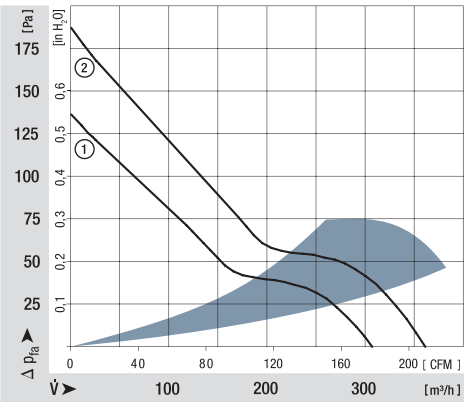


Strand fastened using cable tie; cable tie protrudes 1 mm.

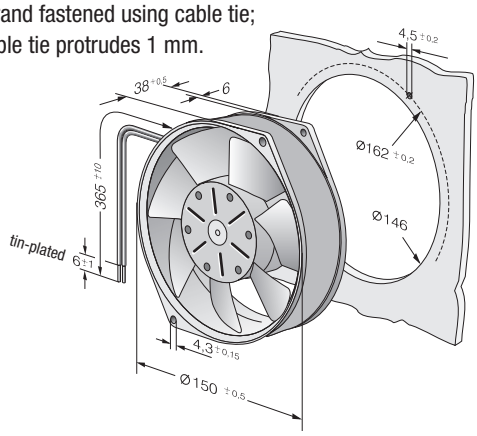

max. 360 m³/h

# DC axial fans

## Series 7200 N Ø 150 x 55 mm

- **Material:** Housing: Die-cast aluminium
  Impeller: GRP[1)] (PA)
- **Direction of air flow:** Exhaust over struts
- **Direction of rotation:** Counter-clockwise, seen on rotor
- **Connection:** Via single wires AWG 22, TR 64
- **Highlights:** Housing with grounding lug for screw M4 x 8 (Torx)
- **Mass:** 725 g

- **Possible special versions:**
  (See chapter DC fans - specials)
  - Speed signal
  - Go / No-go alarm
  - Alarm with limit speed
  - External temperature sensor
  - Internal temperature sensor
  - PWM control input
  - Analogue control input
  - Protection against moisture
  - Protection against salt fog
  - Type of protection: IP 54 / IP 68

1) Fibreglass-reinforced plastic

| Nominal data | Air flow | Air flow | **Nominal voltage** | Voltage range | Sound pressure level | Sound power level | Sintec sleeve bearings / Ball bearings | Input power* | Nominal speed | Temperature range | Service life $L_{10}$ (40 °C) ebm-papst Standard / Service life $L_{10}$ ($T_{max}$) ebm-papst Standard | Life expectancy $L_{10IPC}$ (40 °C) see page 17 | Curve |
|---|---|---|---|---|---|---|---|---|---|---|---|---|---|
| **Type** | **m³/h** | **CFM** | **VDC** | **VDC** | **dB(A)** | **Bel(A)** | □/■ | **Watts** | **rpm** | **°C** | **Hours** | **Hours** | |
| 7212 N | 360 | 212 | **12** | 6...15 | 53 | 6,2 | ■ | 12,0 | 3 050 | -25...+72 | 80 000 / 37 500 | 135 000 | ① |
| 7214 N | 360 | 212 | **24** | 12...30 | 53 | 6,2 | ■ | 12,0 | 3 050 | -25...+72 | 80 000 / 37 500 | 135 000 | ① |
| 7218 N | 360 | 212 | **48** | 24...60 | 53 | 6,2 | ■ | 12,0 | 3 050 | -25...+72 | 80 000 / 37 500 | 135 000 | ① |

Subject to alternations

* Input power at free air flow, these values can be significantly higher in the operating point.

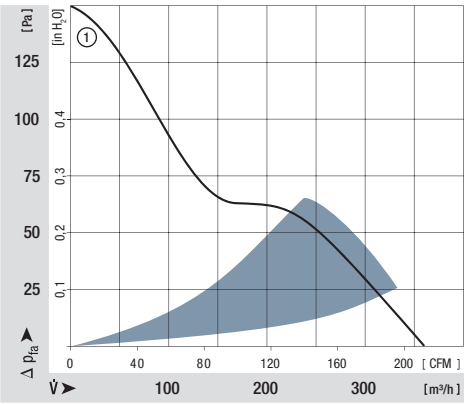


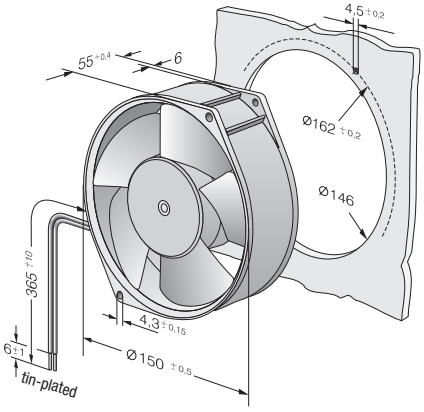




Guard grilles
from p. 238

ebmpapst

max. 350 m³/h

# DC axial fans

## Series 6100 N 172 x 160 x 52 mm

- **Material:** Housing: GRP[1)] (PBT)
  Impeller: GRP[1)] (PA)
- **Direction of air flow:** Exhaust over struts
- **Direction of rotation:** Counter-clockwise, seen on rotor
- **Connection:** Via single wires AWG 22, TR 64
- **Highlights:** Light and compact plastic housing
- **Mass:** 610 g

- **Possible special versions:**
  (See chapter DC fans - specials)
  - Speed signal
  - Go / No-go alarm
  - Alarm with limit speed
  - External temperature sensor
  - Internal temperature sensor
  - PWM control input
  - Analogue control input
  - Protection against moisture
  - Type of protection: IP 54

1) Fibreglass-reinforced plastic

| Nominal data | Air flow | Air flow | Nominal voltage | Voltage range | Sound pressure level | Sound power level | Sintec sleeve bearings / Ball bearings | Input power* | Nominal speed | Temperature range | Service life $L_{10}$ (40 °C) ebm-papst Standard / Service life $L_{10}$ ($T_{max}$) ebm-papst Standard | Life expectancy $L_{10IPC}$ (40 °C) see page 17 | Curve |
|---|---|---|---|---|---|---|---|---|---|---|---|---|---|
| **Type** | **m³/h** | **CFM** | **VDC** | **VDC** | **dB(A)** | **Bel(A)** | □/■ | **Watts** | **rpm** | **°C** | **Hours** | **Hours** | |
| 6112 NM | 350 | 206 | **12** | 8...15 | 49 | 5,9 | ■ | 11 | 2 850 | -20...+70 | 80 000 / 40 000 | 135 000 | ① |
| 6114 NM | 350 | 206 | **24** | 12...32 | 49 | 5,9 | ■ | 11 | 2 850 | -20...+70 | 80 000 / 40 000 | 135 000 | ① |

Subject to alternations

* Input power at free air flow, these values can be significantly higher in the operating point.

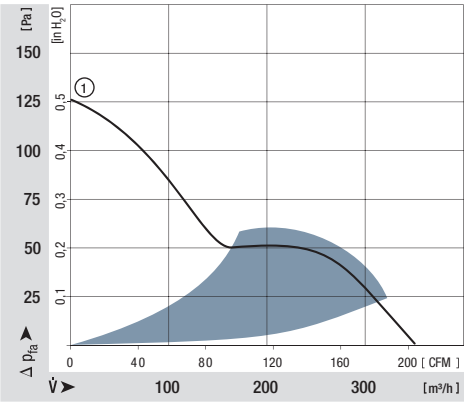


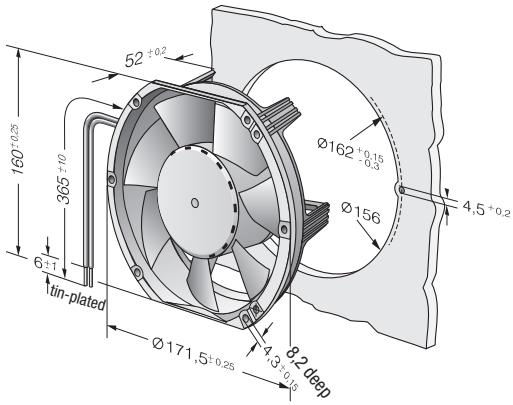

max. 545 m³/h

S-Force

# DC axial fans

## Series 6300 Ø 172 x 51 mm

- **Material:** Housing: Die-cast aluminium
  Impeller: GRP[1)] (PA)
- **Direction of air flow:** Exhaust over struts
- **Direction of rotation:** Counter-clockwise, seen on rotor
- **Connection:** Via single wires AWG 22, TR 64
- **Highlights:** Housing with grounding lug for screw M4 x 8 (Torx)
- **Mass:** 910 g

- **Possible special versions:**
  (See chapter DC fans - specials)
  - Speed signal
  - Go / No-go alarm
  - Alarm with limit speed
  - External temperature sensor
  - Internal temperature sensor
  - PWM control input
  - Analogue control input
  - Protection against moisture
  - Protection against salt fog
  - Type of protection: IP 54

1) Fibreglass-reinforced plastic

| Nominal data | Air flow | Air flow | Nominal voltage | Voltage range | Sound pressure level | Sound power level | Sintec sleeve bearings / Ball bearings | Input power* | Nominal speed | Temperature range | Service life $L_{10}$ (40 °C) ebm-papst Standard / Service life $L_{10}$ ($T_{max}$) ebm-papst Standard | Life expectancy $L_{10IPC}$ (40 °C) see page 17 | Curve |
|---|---|---|---|---|---|---|---|---|---|---|---|---|---|
| **Type** | **m³/h** | **CFM** | **VDC** | **VDC** | **dB(A)** | **Bel(A)** | □/■ | **Watts** | **rpm** | **°C** | **Hours** | **Hours** | |
| 6314/2 MP | 395 | 232 | **24** | 16...30 | 51 | 6,0 | ■ | 14 | 3 700 | -20...+75 | 82 500 / 32 500 | 140 000 | ① |
| 6314/2 NP | 470 | 276 | **24** | 16...30 | 56 | 6,5 | ■ | 23 | 4 400 | -20...+70 | 80 000 / 40 000 | 135 000 | ② |
| 6314/2 HP | 545 | 320 | **24** | 16...30 | 58 | 6,9 | ■ | 31 | 5 000 | -20...+65 | 77 500 / 42 500 | 130 000 | ③ |
| 6318/2 HP | 545 | 320 | **48** | 36...72 | 58 | 6,9 | ■ | 32 | 5 000 | -20...+65 | 77 500 / 42 500 | 130 000 | ③ |

Subject to alternations

Speed control range from 700 rpm up to maximum nominal speed. Stationary at 0 % PWM, maximum speed at sensor break.
* Input power at free air flow, these values can be significantly higher in the operating point.

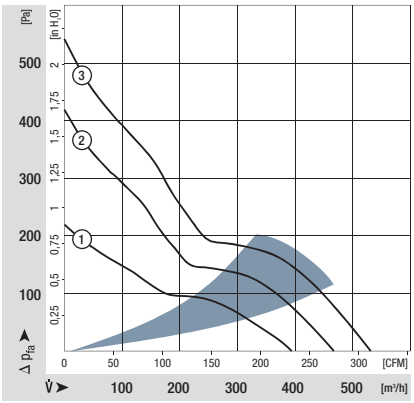


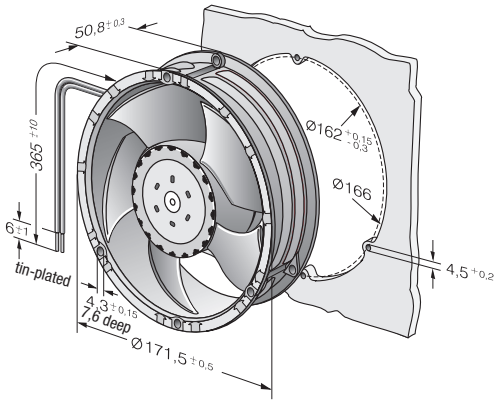




Guard grilles
from p. 238

ebmpapst

max. 930 m³/h

S-Force

# DC axial fans

## Series 6300 TD Ø 172 x 51 mm

- **Material:** Housing: Die-cast aluminium Impeller: GRP[1] (PA)
- **Direction of air flow:** Exhaust over struts
- **Direction of rotation:** Counter-clockwise, seen on rotor
- **Connection:** Via single wires AWG 18, 20 or AWG 22, TR 64, speed signal and control input AWG 22
- **Highlights:** 3-phase fan drive with very smooth running and high efficiency. Housing with grounding lug for screw M4 x 8 (Torx)
- **Mass:** 910 g

1) Fibreglass-reinforced plastic

- **Possible special versions:** (See chapter DC fans - specials)
  - Speed signal
  - Go / No-go alarm
  - Alarm with limit speed
  - External temperature sensor
  - Internal temperature sensor
  - PWM control input
  - Analogue control input
  - Multi-option control input
  - Protection against moisture
  - Protection against salt fog
  - Type of protection: IP 54

| | Nominal data | Air flow | Air flow | Nominal voltage | Voltage range | Sound pressure level | Sound power level | Sintec sleeve bearings / Ball bearings | Input power* | Nominal speed | Temperature range | Service life $L_{10}$ (40 °C) ebm-papst Standard / Service life $L_{10}$ ($T_{max}$) ebm-papst Standard | Life expectancy $L_{10}$IPC (40 °C) see page 17 | Curve |
|---|---|---|---|---|---|---|---|---|---|---|---|---|---|---|
| | Type | m³/h | CFM | VDC | VDC | dB(A) | Bel(A) | □/■ | Watts | rpm | °C | Hours | Hours | |
| | 6312/2 TDHP | 600 | 353 | **12** | 8...16 | 60 | 7,3 | ■ | 40 | 5 500 | -20...+70 | 75 000 / 37 500 | 127 500 | ② |
| NEW | 6314/2 TDHP-298 | 600 | 353 | **24** | 16...30 | 60 | 7,3 | ■ | 42 | 5 500 | -20...+65 | 75 000 / 42 500 | 127 500 | ① |
| | 6314/2 TDHP | 600 | 353 | **24** | 16...36 | 60 | 7,3 | ■ | 40 | 5 500 | -20...+75 | 75 000 / 30 000 | 127 500 | ② |
| | 6314/2 TDHHP | 710 | 418 | **24** | 16...36 | 69 | 7,9 | ■ | 67 | 7 000 | -20...+75 | 62 500 / 25 000 | 105 000 | ③ |
| NEW | 6314/2 TDH4P | 930 | 545 | **24** | 16...36 | 75 | 8,4 | ■ | 150 | 9 200 | -20...+75 | 52 500 / 20 000 | 87 500 | ⑤ |
| NEW | 6318/2 TDHP-299 | 600 | 353 | **48** | 36...60 | 60 | 7,3 | ■ | 42 | 5 500 | -20...+65 | 75 000 / 42 500 | 127 500 | ① |
| | 6318/2 TDHP | 600 | 353 | **48** | 36...72 | 60 | 7,3 | ■ | 40 | 5 500 | -20...+75 | 75 000 / 30 000 | 127 500 | ② |
| | 6318/2 TDHHP | 710 | 418 | **48** | 36...72 | 69 | 7,9 | ■ | 67 | 7 000 | -20...+75 | 62 500 / 25 000 | 105 000 | ③ |
| | 6318/2 TDH4P | 930 | 545 | **48** | 36...72 | 75 | 8,4 | ■ | 150 | 9 200 | -20...+75 | 52 500 / 20 000 | 87 500 | ④ |

Subject to alternations

Speed control range from 1000 rpm up to maximum nominal speed. Stationary at 0 % PWM, maximum speed at sensor break.
* Input power at free air flow, these values can be significantly higher in the operating point.

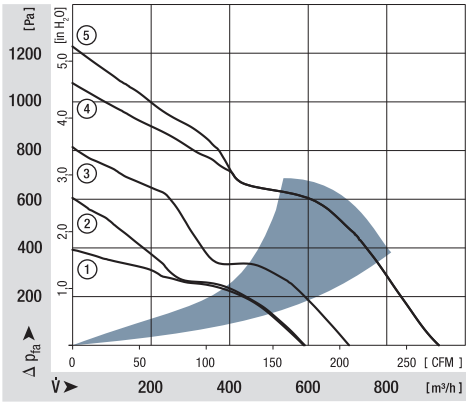


*** Input power - in operation**

| Fan type | optimum operating range (W) |
|---|---|
| 6318/2 TDHHP | 115 |
| 6318/2 TDH4P | 270 |

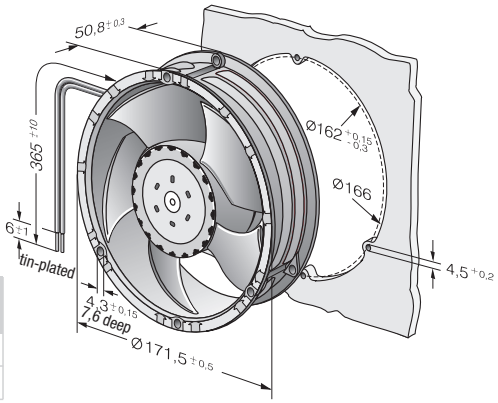

max. 930 m³/h

S-Force

# DC axial fans

## Series 6300 TD 172 x 160 x 51 mm

- **Material:** Housing: Die-cast aluminium
  Impeller: GRP[1)] (PA)
- **Direction of air flow:** Exhaust over struts
- **Direction of rotation:** Counter-clockwise, seen on rotor
- **Connection:** Via single wires AWG 18, 20 or AWG 22, TR 64, speed signal and control input AWG 22
- **Highlights:** 3-phase fan drive with very smooth running and high efficiency. Housing with grounding lug for screw M4 x 8 (Torx)
- **Mass:** 910 g

1) Fibreglass-reinforced plastic

- **Possible special versions:**
  (See chapter DC fans - specials)
  - Speed signal
  - Go / No-go alarm
  - Alarm with limit speed
  - External temperature sensor
  - Internal temperature sensor
  - PWM control input
  - Analogue control input
  - Multi-option control input
  - Protection against moisture
  - Protection against salt fog
  - Type of protection: IP 54

| Nominal data | Air flow | Air flow | **Nominal voltage** | Voltage range | Sound pressure level | Sound power level | Sintec sleeve bearings / Ball bearings | Input power* | Nominal speed | Temperature range | Service life $L_{10}$ (40 °C) ebm-papst Standard / Service life $L_{10}$ ($T_{max}$) ebm-papst Standard | Life expectancy $L_{10IPC}$ (40 °C) see page 17 | Curve |
|---|---|---|---|---|---|---|---|---|---|---|---|---|---|
| **Type** | **m³/h** | **CFM** | **VDC** | **VDC** | **dB(A)** | **Bel(A)** | □/■ | **Watts** | **rpm** | **°C** | **Hours** | **Hours** | |
| 6314/2 TDHHP-015 | 710 | 418 | **24** | 16...36 | 69 | 7,9 | ■ | 67 | 7 000 | -20...+75 | 62 500 / 25 000 | 105 000 | ① |
| 6318/2 TDH4P-007 | 930 | 546 | **48** | 36...72 | 75 | 8,4 | ■ | 150 | 9 200 | -20...+75 | 52 500 / 20 000 | 87 500 | ② |

Subject to alternations

Speed control range from 1000 rpm up to maximum nominal speed. Stationary at 0 % PWM, maximum speed at sensor break.
* Input power at free air flow, these values can be significantly higher in the operating point.

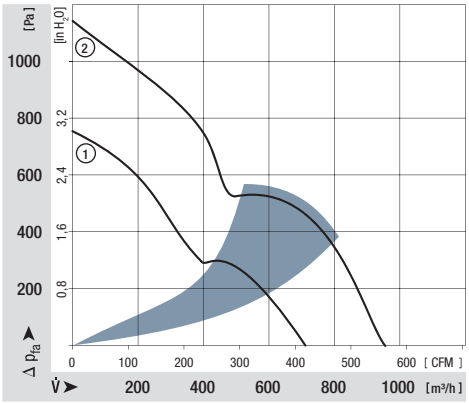


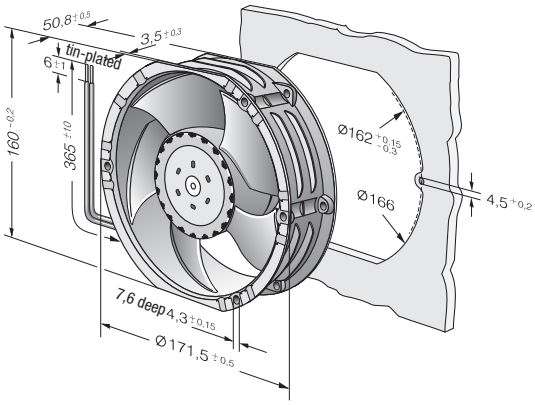




Guard grilles
from p. 238

ebmpapst

max. 1100 m³/h

# DC diagonal fans

## Series DV 6300 Ø 172 x 51 mm

- **Material:** Housing: Die-cast aluminium Impeller: GRP[1)] (PA)
- **Direction of air flow:** Exhaust over struts
- **Direction of rotation:** Counter-clockwise, seen on rotor
- **Connection:** (+) and GND: AWG 18, UL 1007, TR 64, speed signal and control input AWG 22, UL 1007, TR 64
- **Highlights:** 3-phase fan drive with very smooth running and high efficiency. Housing with grounding lug for screw M4 x 8 (Torx)
- **Mass:** 1050 g

1) Fibreglass-reinforced plastic

- **Possible special versions:**
  (See chapter DC fans - specials)
  - Speed signal
  - Go / No-go alarm
  - Alarm with limit speed
  - External temperature sensor
  - Internal temperature sensor
  - PWM control input
  - Analogue control input
  - Multi-option control input
  - Protection against moisture
  - Protection against salt fog
  - Type of protection: IP 54

| | Nominal data | Air flow | Air flow | Nominal voltage | Voltage range | Sound pressure level | Sound power level | Sintec sleeve bearings / Ball bearings | Input power | Nominal speed | Temperature range | Service life $L_{10}$ (40 °C) ebm-papst Standard / Service life $L_{10}$ ($T_{max}$) ebm-papst Standard | Life expectancy $L_{10IPC}$ (40 °C) see page 17 | Curve |
|---|---|---|---|---|---|---|---|---|---|---|---|---|---|---|
| | Type | m³/h | CFM | VDC | VDC | dB(A) | Bel(A) | □/■ | Watts | rpm | °C | Hours | Hours | |
| NEW | DV 6318/2 TDHHP* | 630 | 371 | **48** | 36…72 | 68 | 7,6 | ■ | 75 | 4000 | -20…+65 | 70 000 / 40 000 | 117 500 | ① |
| NEW | DV 6318/2 TDH3P* | 770 | 453 | **48** | 36…72 | 73 | 8,0 | ■ | 135 | 4900 | -20…+65 | 60 000 / 32 500 | 102 500 | ② |
| NEW | DV 6318/2 TDH4P | 1050 | 617 | **48** | 36…72 | 77 | 8,7 | ■ | 300 | 6500 | -20…+65 | 50 000 / 27 500 | 85 000 | ③ |
| NEW | DV 6318/2 TDH5P** | 1100 | 647 | **48** | 36…72 | 79 | 8,9 | ■ | 360 | 6800 | -20…+65 | 40 000 / 22 500 | 67 500 | ④ |

* provisional
** Rotor protrusion a = 3 mm
Subject to alternations

Speed control range from 1000 rpm up to maximum nominal speed. Stationary at 0 % PWM, maximum speed at sensor break.
The fans have a speed increase of up to 30%, thus producing a more even characteristic curve.

| | | n rpm | $P_{ed}$ W | $Lw_A$ dB(A) | $L_{10}$ (40 °C) | $L_{10}$ (65 °C) | $L_{10IPC}$ (40 °C) |
|---|---|---|---|---|---|---|---|
| ① | ❶ | 4000 | 65,5 | 79 | 70 000 | 40 000 | 117 500 |
| ① | ❷ | 3835 | 64,5 | 78 | 72 500 | 40 000 | 122 500 |
| ① | ❸ | 3815 | 64,5 | 76 | 75 000 | 42 500 | 127 500 |
| ① | ❹ | 3930 | 65 | 76 | 77 500 | 42 500 | 130 000 |
| ① | ❺ | 4240 | 66 | 79 | 77 500 | 42 500 | 130 000 |
| ② | ❶ | 4900 | 120 | 83 | 60 000 | 32 500 | 102 500 |
| ② | ❷ | 4690 | 119 | 82 | 67 500 | 37 500 | 115 000 |
| ② | ❸ | 4670 | 119 | 80 | 72 500 | 40 000 | 122 500 |
| ② | ❹ | 4870 | 120 | 81 | 75 000 | 42 500 | 127 500 |
| ② | ❺ | 5190 | 121 | 85 | 75 000 | 42 500 | 127 500 |

| | | n rpm | $P_{ed}$ W | $Lw_A$ dB(A) | $L_{10}$ (40 °C) | $L_{10}$ (65 °C) | $L_{10IPC}$ (40 °C) |
|---|---|---|---|---|---|---|---|
| ③ | ❶ | 6500 | 280 | 90 | 50 000 | 27 500 | 85 000 |
| ③ | ❷ | 6230 | 275 | 89 | 62 500 | 35 000 | 105 000 |
| ③ | ❸ | 6200 | 280 | 88 | 70 000 | 40 000 | 117 500 |
| ③ | ❹ | 6450 | 281 | 88 | 72 500 | 40 000 | 122 500 |
| ③ | ❺ | 6900 | 283 | 92,5 | 72 500 | 40 000 | 122 500 |
| ④ | ❶ | 6950 | 345 | 92 | 40 000 | 22 500 | 67 500 |
| ④ | ❷ | 6720 | 345 | 91 | 57 500 | 32 500 | 97 500 |
| ④ | ❸ | 6630 | 345 | 89,5 | 62 500 | 35 000 | 105 000 |
| ④ | ❹ | 6850 | 345 | 89 | 67 500 | 37 500 | 115 000 |
| ④ | ❺ | 7300 | 345 | 94 | 72 500 | 40 000 | 122 500 |

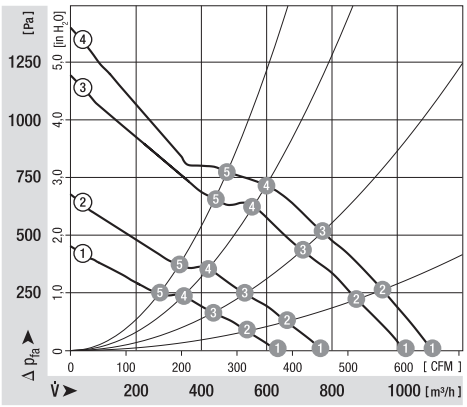


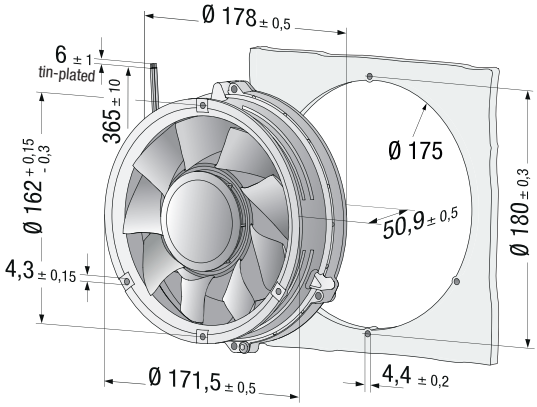

max. 480 m³/h

# DC axial fans

## Series 6400 172 x 150 x 51 mm

- **Material:** Housing: Die-cast aluminium
  Impeller: GRP[1)] (PA)
- **Direction of air flow:** Exhaust over struts
- **Direction of rotation:** Counter-clockwise, seen on rotor
- **Connection:** On flat plugs 3 x 0.5 mm
- **Highlights:** Housing with grounding lug for screw M4 x 8 (Torx)
- **Mass:** 760 g

- **Possible special versions:**
  (See chapter DC fans - specials)
  - Speed signal
  - Go / No-go alarm
  - Alarm with limit speed
  - External temperature sensor
  - Internal temperature sensor
  - PWM control input
  - Analogue control input
  - Protection against moisture
  - Protection against salt fog
  - Type of protection: IP 54

1) Fibreglass-reinforced plastic

| Nominal data | Air flow | Air flow | Nominal voltage | Voltage range | Sound pressure level | Sound power level | Sintec sleeve bearings / Ball bearings | Input power*** | Nominal speed | Temperature range | Service life $L_{10}$ (40 °C) ebm-papst Standard / Service life $L_{10}$ ($T_{max}$) ebm-papst Standard | Life expectancy $L_{10IPC}$ (40 °C) see page 17 | Curve |
|---|---|---|---|---|---|---|---|---|---|---|---|---|---|
| **Type** | **m³/h** | **CFM** | **VDC** | **VDC** | **dB(A)** | **Bel(A)** | □/■ | **Watts** | **rpm** | **°C** | **Hours** | **Hours** | |
| 6412 M | 350 | 206 | **12** | 8...15 | 52 | 6,0 | ■ | 12 | 2 850 | -20...+72 | 80 000 / 37 500 | 135 000 | ① |
| 6424 M | 350 | 206 | **24** | 12...32 | 52 | 6,0 | ■ | 12 | 2 850 | -20...+72 | 80 000 / 37 500 | 135 000 | ① |
| 6424 | 410 | 241 | **24** | 12...28 | 57 | 6,4 | ■ | 17 | 3 400 | -20...+72 | 75 000 / 35 000 | 127 500 | ② |
| 6424 H | 480 | 283 | **24** | 12...28 | 63 | 7,1 | ■ | 26 | 4 000 | -20...+55** | 70 000 / 50 000 | 117 500 | ③ |
| 6448 | 410 | 241 | **48** | 28...60 | 57 | 6,4 | ■ | 17 | 3 400 | -20...+72 | 75 000 / 35 000 | 127 500 | ② |
| 6448 H* | 480 | 283 | **48** | 28...60 | 63 | 7,1 | ■ | 26 | 4 000 | -20...+55** | 70 000 / 50 000 | 117 500 | ③ |

Subject to alternations

* Strand 310 mm.
** 72 °C versions on request
*** Input power at free air flow, these values can be significantly higher in the operating point.

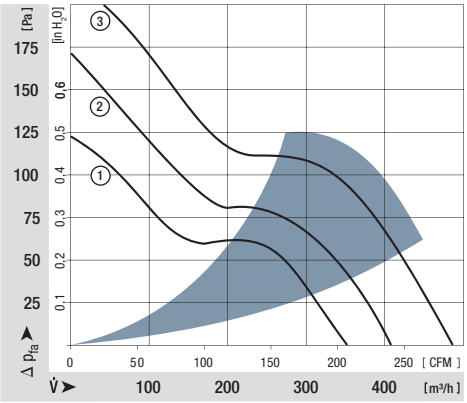


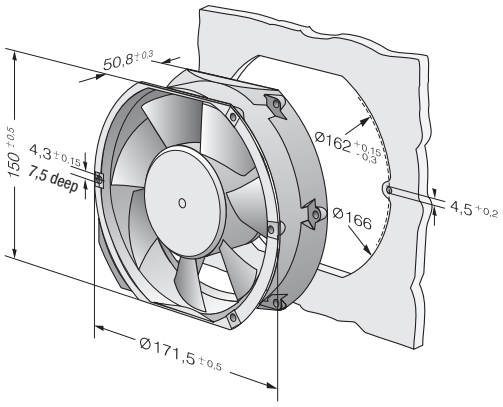




Guard grilles from p. 238

Connection cables from p. 251

ebmpapst

max. 900 m³/h

# DC axial fans

## Series 6400 TD TURBOFAN 172 x 150 x 51 mm

- **Material:** Housing: Die-cast aluminium Impeller: GRP[1] (PA)
- **Direction of air flow:** Exhaust over struts
- **Direction of rotation:** Counter-clockwise, seen on rotor
- **Connection:** Via single wires AWG 18, 20 or AWG 22, TR 64, speed signal and control input AWG 22
- **Highlights:** 3-phase fan drive with very smooth running and high efficiency. Housing with grounding lug for screw M4 x 8 (Torx)
- **Mass:** 760 g

1) Fibreglass-reinforced plastic

- **Possible special versions:** (See chapter DC fans - specials)
  - Speed signal
  - Go / No-go alarm
  - Alarm with limit speed
  - External temperature sensor
  - Internal temperature sensor
  - PWM control input
  - Analogue control input
  - Protection against moisture
  - Protection against salt fog
  - Type of protection: IP 54
  - Reversible direction of rotation

| Nominal data | | Air flow | Air flow | Nominal voltage | Voltage range | Sound pressure level | Sound power level | Sintec sleeve bearings Ball bearings | Input power** | Nominal speed | Temperature range | Service life $L_{10}$ (40 °C) ebm-papst Standard | Service life $L_{10}$ ($T_{max}$) ebm-papst Standard | Life expectancy $L_{10IPC}$ (40 °C) see page 17 | Curve |
|---|---|---|---|---|---|---|---|---|---|---|---|---|---|---|---|
| Type | | m³/h | CFM | VDC | VDC | dB(A) | Bel(A) | □/■ | Watts | rpm | °C | Hours | | Hours | |
| min | 6424 TD... | 90 | 53 | 24 | 16...28 | 18 | — | ■ | 2 | 800 | -20...+60 | 70 000 / 45 000 | | 117 500 | ① |
| max | | 600 | 353 | | | 65 | 7,4 | | 50 | 5 100 | | | | | ② |
| min | 6448 TD... | 90 | 53 | 48 | 40...55* | 18 | — | ■ | 2 | 800 | -20...+60 | 70 000 / 45 000 | | 117 500 | ① |
| max | | 600 | 353 | | | 65 | 7,4 | | 50 | 5 100 | | | | | ② |
| min | 6448 TDHH... | 90 | 53 | 48 | 36...72 | 18 | — | ■ | 2 | 800 | -20...+60 | 70 000 / 45 000 | | 117 500 | ① |
| max | | 900 | 530 | | | 78 | 8,6 | | 163 | 7500 | | | | | ③ |

Subject to alternations

* Variants with an extended voltage range available to deliver on request.

Models 6424 TD..., 6448 TD... and 6448 TDHH... are available in customer-specific, custom-developed variants only.
The data specified here is technically feasible benchmark values. The fans can be specially adapted to your application with signal outputs and control inputs.
For details of the technical possibilities, refer to the chapters on the sensor signal, alarm signal and control inputs beginning on page 161.
** Input power at free air flow, these values can be significantly higher in the operating point.

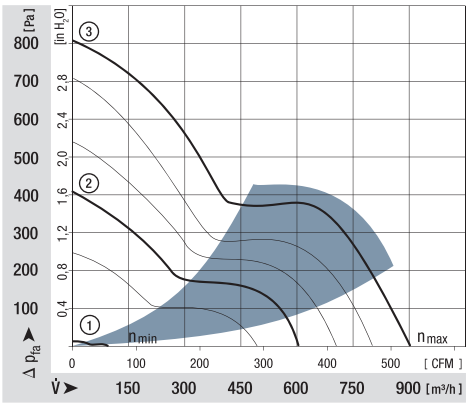


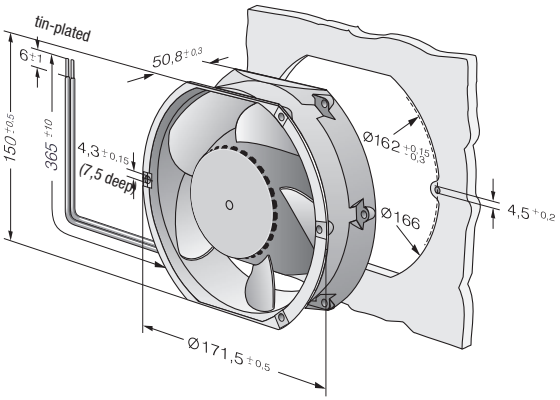

max. 530 m³/h

# DC diagonal fans

## Series DV 6400 172 x 160 x 51 mm

- **Material:** Housing: Die-cast aluminium
  Impeller: GRP[1)] (PA)
- **Direction of air flow:** Exhaust over struts
- **Direction of rotation:** Counter-clockwise, seen on rotor
- **Connection:** Via single wires AWG 22, TR 64
- **Highlights:** Housing with grounding lug for screw M4 x 8 (Torx)
- **Mass:** 820 g

- **Possible special versions:**
  (See chapter DC fans - specials)
  - Speed signal
  - Go / No-go alarm
  - Alarm with limit speed
  - External temperature sensor
  - Internal temperature sensor
  - PWM control input
  - Analogue control input
  - Protection against moisture
  - Protection against salt fog
  - Type of protection: IP 54

1) Fibreglass-reinforced plastic

| Nominal data | Air flow | Air flow | **Nominal voltage** | Voltage range | Sound pressure level | Sound power level | Sintec sleeve bearings / Ball bearings | Input power | Nominal speed | Temperature range | Service life $L_{10}$ (40 °C) ebm-papst Standard / Service life $L_{10}$ ($T_{max}$) ebm-papst Standard | Life expectancy $L_{10IPC}$ (40 °C) see page 17 | Curve |
|---|---|---|---|---|---|---|---|---|---|---|---|---|---|
| **Type** | **m³/h** | **CFM** | **VDC** | **VDC** | **dB(A)** | **Bel(A)** | □/■ | **Watts** | **rpm** | **°C** | **Hours** | **Hours** | |
| DV 6424 | 530 | 312 | **24** | 16...28 | 65 | 7,3 | ■ | 40 | 4 300 | -20...+75 | 90 000 / 35 000 | 152 500 | ① |
| DV 6448 | 530 | 312 | **48** | 28...60 | 65 | 7,3 | ■ | 40 | 4 300 | -20...+75 | 90 000 / 35 000 | 152 500 | ① |

Subject to alternations

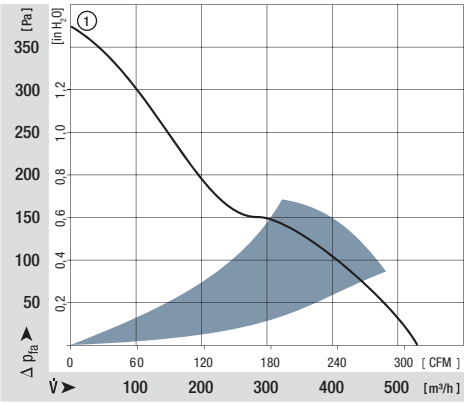


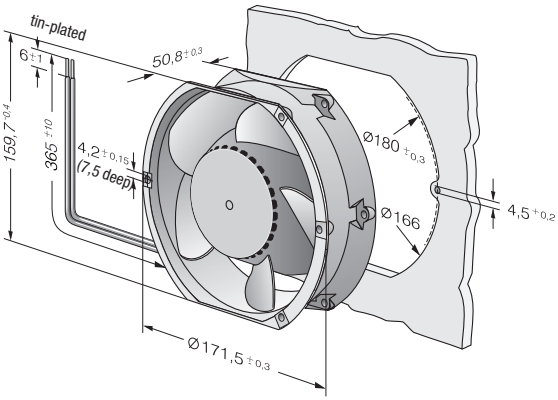




Guard grilles
from p. 238

ebmpapst

max. 680 m³/h

# DC diagonal fans

## Series DV 6400 TD TURBOFAN 172 x 160 x 51 mm

- **Material:** Housing: Die-cast aluminium
  Impeller: GRP[1)] (PA)
- **Direction of air flow:** Exhaust over struts
- **Direction of rotation:** Counter-clockwise, seen on rotor
- **Connection:** Via single wires AWG 22, TR 64
- **Highlights:** 3-phase fan drive with very smooth running and high efficiency. Housing with grounding lug for screw M4 x 8 (Torx)
- **Mass:** 820 g

1) Fibreglass-reinforced plastic

- **Possible special versions:**
  (See chapter DC fans - specials)
  - Speed signal
  - Go / No-go alarm
  - Alarm with limit speed
  - External temperature sensor
  - Internal temperature sensor
  - PWM control input
  - Analogue control input
  - Protection against moisture
  - Protection against salt fog
  - Type of protection: IP 54
  - Reversible direction of rotation

| Nominal data | | Air flow | Air flow | Nominal voltage | Voltage range | Sound pressure level | Sound power level | Sintec sleeve bearings / Ball bearings | Input power* | Nominal speed | Temperature range | Service life $L_{10}$ (40 °C) ebm-papst Standard / Service life $L_{10}$ ($T_{max}$) ebm-papst Standard | Life expectancy $L_{10IPC}$ (40 °C) see page 17 | Curve |
|---|---|---|---|---|---|---|---|---|---|---|---|---|---|---|
| Type | | m³/h | CFM | VDC | VDC | dB(A) | Bel(A) | □/■ | Watts | rpm | °C | Hours | Hours | |
| | DV 6424 TD | 680 | 400 | **24** | 16...28 | 71 | 7,9 | ■ | 91 | 5 500 | -20...+60 | 65 000 / 40 000 | 110 000 | ② |
| min | DV 6424 TD... | 100 | 59 | **24** | 16...28 | 29 | — | ■ | 2 | 800 | -20...+60 | 65 000 / 40 000 | 110 000 | ① |
| max | | 680 | 400 | | | 71 | 7,9 | | 91 | 5 500 | | | | ② |
| min | DV 6448 TD... | 100 | 59 | **48** | 40...55 | 29 | — | ■ | 2 | 800 | -20...+60 | 65 000 / 40 000 | 110 000 | ① |
| max | | 680 | 400 | | | 71 | 7,9 | | 86 | 5 500 | | | | ② |

Subject to alternations

Models DV 6424 TD... and DV 6448 TD... are available in customer-specific, custom-developed variants only.
The data specified here is technically feasible benchmark values. The fans can be specially adapted to your application with signal outputs and control inputs.
For details of the technical possibilities, refer to the chapters on the sensor signal, alarm signal and control inputs beginning on page 161.
* Input power at free air flow, these values can be significantly higher in the operating point.

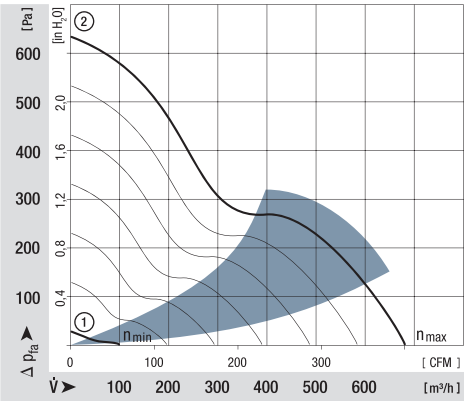


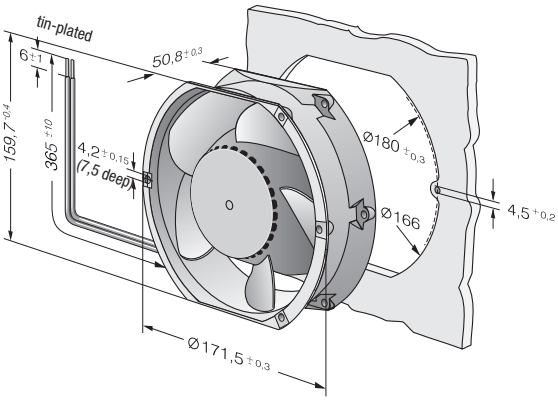

max. 1220 m³/h

S-Force

# DC axial fans

## Series 2200 FTD 220 x 200 x 51 mm

- **Material:** Housing: Die-cast aluminium
  Impeller: GRP[1)] (PA)
- **Direction of air flow:** Exhaust over struts
- **Direction of rotation:** Counter-clockwise, seen on rotor
- **Connection:** Via single wires AWG 18, 20 or AWG 22, TR 64, speed signal and control input AWG 22
- **Highlights:** 3-phase fan drive with very smooth running and high efficiency. Housing with grounding lug for screw M4 x 8 (Torx)
- **Mass:** 1000 g

1) Fibreglass-reinforced plastic

- **Possible special versions:**
  (See chapter DC fans - specials)
  - Speed signal
  - Go / No-go alarm
  - Alarm with limit speed
  - External temperature sensor
  - Internal temperature sensor
  - PWM control input
  - Analogue control input
  - Multi-option control input
  - Protection against moisture
  - Protection against salt fog
  - Type of protection: IP 54

| Nominal data | Air flow | Air flow | **Nominal voltage** | Voltage range | Sound pressure level | Sound power level | Sintec sleeve bearings / Ball bearings | Input power* | Nominal speed | Temperature range | Service life $L_{10}$ (40 °C) ebm-papst Standard / Service life $L_{10}$ ($T_{max}$) ebm-papst Standard | Life expectancy $L_{10IPC}$ (40 °C) see page 17 | Curve |
|---|---|---|---|---|---|---|---|---|---|---|---|---|---|
| **Type** | **m³/h** | **CFM** | **VDC** | **VDC** | **dB(A)** | **Bel(A)** | □/■ | **Watts** | **rpm** | **°C** | **Hours** | **Hours** | |
| 2214 F/2 TDHO | 790 | 465 | **24** | 16...30 | 62 | 7,1 | ■ | 35 | 4250 | -25...+75 | 90 000 / 42 500 | 152 500 | ① |
| 2214 F/2 TDHHO | 940 | 553 | **24** | 16...36 | 66 | 7,4 | ■ | 48 | 5000 | -25...+70 | 85 000 / 42 500 | 142 500 | ② |
| 2218 F/2 TDHO | 790 | 465 | **48** | 36...57 | 62 | 7,1 | ■ | 35 | 4250 | -25...+75 | 90 000 / 42 500 | 152 500 | ① |
| 2218 F/2 TDHHO | 940 | 553 | **48** | 36...72 | 66 | 7,4 | ■ | 48 | 5000 | -25...+70 | 85 000 / 42 500 | 142 500 | ② |
| 2218 F/2 TDH4P | 1220 | 718 | **48** | 36...72 | 72 | 8,2 | ■ | 103 | 6500 | -20...+65 | 70 000 / 40 000 | 117 500 | ③ |

Subject to alternations

Speed control range from 1000 rpm up to maximum nominal speed. Stationary at 0 % PWM / 0 V,
Type O: stationary at sensor break; Type P: maximum speed at sensor break.
* Input power at free air flow, these values can be significantly higher in the operating point.

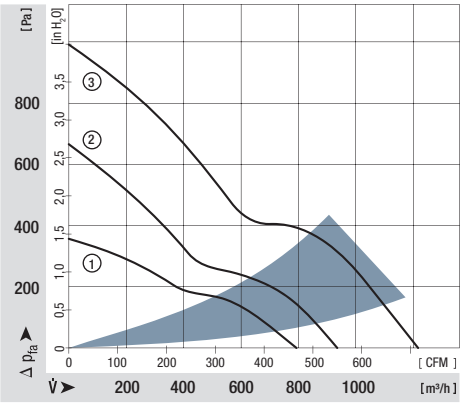


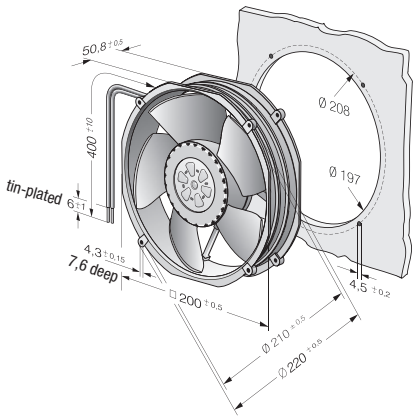




Guard grilles
from p. 238

ebmpapst

max. 1000 m³/h

# DC axial fans

## Series 2200 TD 225 x 225 x 80 mm

- **Material:** Wall ring: Die-cast aluminium
  Impeller: GRP[1)] (PA)
- **Direction of air flow:** Exhaust over struts
- **Direction of rotation:** Counter-clockwise, seen on rotor
- **Connection:** With terminal strip
- **Highlights:** 3-phase fan drive with very smooth running
  Fully integrated electronic commutation
- **Mass:** 2,1 kg

1) Fibreglass-reinforced plastic

- **Possible special versions:**
  (See chapter DC fans - specials)
  - Speed signal
  - Go / No-go alarm
  - Alarm with limit speed
  - External temperature sensor
  - Internal temperature sensor
  - PWM control input
  - Analogue control input
  - Multi-option control input
  - Protection against moisture
  - Type of protection: IP 54

| Nominal data | Air flow | Air flow | **Nominal voltage** | Voltage range | Sound pressure level | Sound power level | Sintec sleeve bearings / Ball bearings | Input power* | Nominal speed | Temperature range | Service life $L_{10}$ (40 °C) ebm-papst Standard / Service life $L_{10}$ ($T_{max}$) ebm-papst Standard | Life expectancy $L_{10IPC}$ (40 °C) see page 17 | Curve |
|---|---|---|---|---|---|---|---|---|---|---|---|---|---|
| **Type** | **m³/h** | **CFM** | **VDC** | **VDC** | **dB(A)** | **Bel(A)** | □/■ | **Watts** | **rpm** | **°C** | **Hours** | **Hours** | |
| 2214/2 TDO | 1000 | 588 | **24** | 16...30 | 59 | 6,8 | ■ | 50 | 3 000 | -20...+60 | 80 000 / 50 000 | 135 000 | ① |
| 2218/2 TDO | 1000 | 588 | **48** | 36...57 | 59 | 6,8 | ■ | 50 | 3 000 | -20...+60 | 80 000 / 50 000 | 135 000 | ① |

Subject to alternations

* Input power at free air flow, these values can be significantly higher in the operating point.

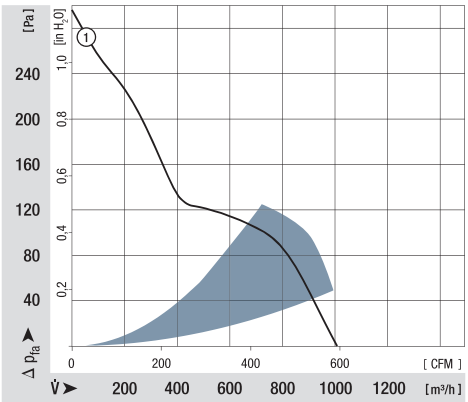


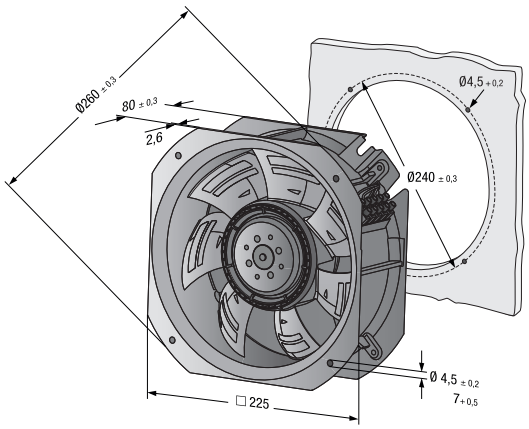

max. 1245 m³/h

# DC diagonal module

## 225 x 225 x 80 mm

- **Material:** Housing: Fibreglass-reinforced plastic (PA6)
  Impeller: Fibreglass-reinforced plastic (PA)
- **Direction of air flow:** Exhaust over struts
- **Direction of rotation:** Clockwise, seen on rotor
- **Connection:** Via connection line AWG 20, 4x brass lead tips crimped
- **Mass:** 1,7 kg
- **Operation mode:** Continuous operation (S1)

| Nominal data | | Curve | Nominal voltage | Voltage range | Air flow | Speed / rpm | Input power | Current draw | Sound power level | Perm. amb. temp. | Technical features and electrical connections |
|---|---|---|---|---|---|---|---|---|---|---|---|
| **Type** | **Motor** | | **VDC** | **VDC** | **m³/h** | **rpm** | **W** | **A** | **dB(A)** | **°C** | |
| K1G 200-AD65-04 | M1G 074-BF | ① | 24 | 16...28 | 1020 | 3 400 | 95 | 4,7 | 76 | -25...+60 | p. 258 / J5) |
| K1G 200-AD31-02 | M1G 074-BF | ② | 24 | 16...28 | 1045 | 3 520 | 107 | 5,4 | 77 | -25...+70 | p. 258 / J5) |
| K1G 200-AD49-04 | M1G 074-BF | ③ | 48 | 36...57 | 1095 | 3 650 | 120 | 3,4 | 77 | -25...+60 | p. 258 / J5) |
| K1G 200-AD37-02 | M1G 074-BF | ④ | 48 | 36...57 | 1245 | 4 140 | 183 | 5,6 | 81 | -25...+70 | p. 258 / J5) |

Subject to alternations

| | | n rpm | $P_{ed}$ W | I A | $Lw_A$ dB(A) |
|---|---|---|---|---|---|
| ① | 1 | 3400 | 95 | 4,70 | 76 |
| ① | 2 | 3410 | 116 | 5,61 | 74 |
| ① | 3 | 3410 | 119 | 5,75 | 74 |
| ① | 4 | 3410 | 117 | 5,62 | 76 |
| ② | 1 | 3520 | 107 | 5,30 | 77 |
| ② | 2 | 3520 | 127 | 6,24 | 75 |
| ② | 3 | 3520 | 129 | 6,31 | 76 |
| ② | 4 | 3520 | 126 | 6,18 | 76 |
| ③ | 1 | 3650 | 120 | 3,40 | 77 |
| ③ | 2 | 3650 | 141 | 3,90 | 75 |
| ③ | 3 | 3650 | 145 | 3,99 | 76 |
| ③ | 4 | 3650 | 141 | 3,88 | 78 |
| ④ | 1 | 4140 | 183 | 5,60 | 81 |
| ④ | 2 | 4090 | 212 | 6,46 | 79 |
| ④ | 3 | 4060 | 213 | 6,52 | 79 |
| ④ | 4 | 4110 | 211 | 6,43 | 80 |

Air performance measured as per: ISO 5801, Installation category A, without protection against accidental contact.

Suction-side noise levels: LWA as per ISO 13347, LpA measured at 1 m distance to fan axis.

The acoustic values given are only valid under the measurment conditions listed and may vary depending on the installation situation.

With any deviation to the standard setup, the specific values have to be checked and reviewed once installed or fitted! For detailed information see http://www.ebmpapst.com/general conditions

**Cable assignment:**
Red = UN
Yellow = 0-10 VDC
White = Speed monitoring output
Blue = GND

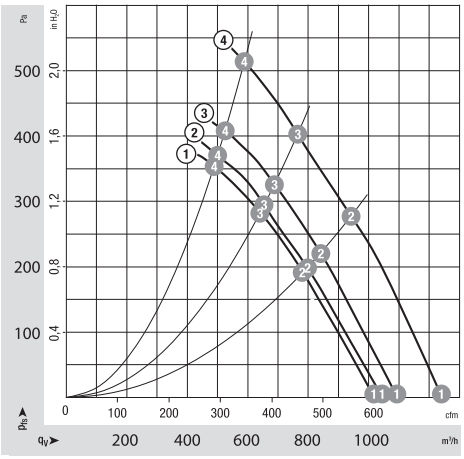


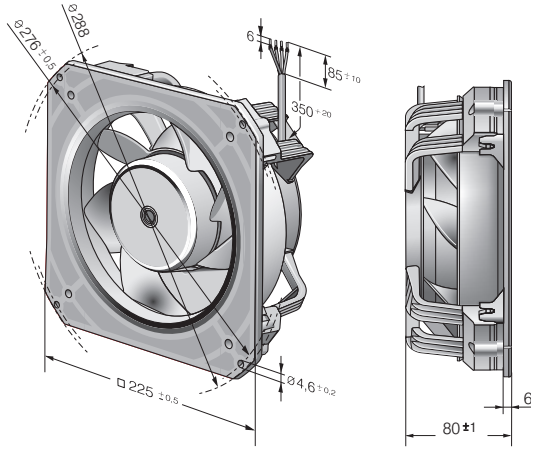

max. 905 m³/h

# DC diagonal module

225 x 225 x 89 mm

- **Material:** Housing: Fibreglass-reinforced plastic (PA6)
  Impeller: Fibreglass-reinforced plastic (PA)
- **Direction of air flow:** Exhaust over struts
- **Direction of rotation:** Clockwise, seen on rotor
- **Connection:** Via connection line AWG 16, 4x brass lead tips crimped
- **Mass:** 2,2 kg
- **Operation mode:** Continuous operation (S1)

| Nominal data | | Curve | Nominal voltage | Voltage range | Air flow | Speed / rpm | Input power | Current draw | Sound power level | Perm. amb. temp. | Technical features and electrical connections |
|---|---|---|---|---|---|---|---|---|---|---|---|
| **Type** | **Motor** | | **VDC** | **VDC** | **m³/h** | **rpm** | **W** | **A** | **dB(A)** | **°C** | |
| K3G 200-BD46-04 | M3G 074-CF | ① | 24 | 16...28 | 725 | 4120 | 170 | 7,0 | 80 | -25...+60 | p. 258 / J5) |
| K3G 200-BD44-02 | M3G 074-CF | ② | 24 | 16...28 | 805 | 4830 | 275 | 11,5 | 84 | -25...+60 | p. 258 / J5) |
| K3G 200-BD64-04 | M3G 074-CF | ③ | 48 | 36...57 | 900 | 4890 | 280 | 5,9 | 85 | -25...+60 | p. 258 / J5) |
| K3G 200-BDA8-02 | M3G 074-CF | ④ | 48 | 36...57 | 905 | 5470 | 400 | 8,4 | 88 | -25...+60 | p. 258 / J5) |

Subject to alternations

| | | n rpm | $P_{ed}$ W | I A | $Lw_A$ dB(A) |
|---|---|---|---|---|---|
| ① | ❶ | 4120 | 170 | 7,0* | 80 |
| ① | ❷ | 4025 | 180 | 7,52* | 77 |
| ① | ❸ | 4005 | 187 | 7,80* | 76 |
| ① | ❹ | 4045 | 187 | 7,78* | 78 |
| ② | ❶ | 4830 | 275 | 11,5* | 84 |
| ② | ❷ | 4720 | 294 | 12,24* | 81 |
| ② | ❸ | 4685 | 299 | 12,48* | 80 |
| ② | ❹ | 4715 | 295 | 12,30* | 83 |
| ③ | ❶ | 4890 | 280 | 5,9* | 85 |
| ③ | ❷ | 4795 | 300 | 6,27* | 81 |
| ③ | ❸ | 4755 | 307 | 6,41* | 80 |
| ③ | ❹ | 4780 | 304 | 6,35* | 82 |
| ④ | ❶ | 5470 | 400 | 8,4* | 88 |
| ④ | ❷ | 5365 | 426 | 8,89* | 85 |
| ④ | ❸ | 5310 | 438 | 9,17* | 83 |
| ④ | ❹ | 5355 | 431 | 9,01* | 87 |

Air performance measured as per: ISO 5801, Installation category A, without protection against accidental contact.

Suction-side noise levels: LWA as per ISO 13347, LpA measured at 1 m distance to fan axis.

The acoustic values given are only valid under the measurment conditions listed and may vary depending on the installation situation.

With any deviation to the standard setup, the specific values have to be checked and reviewed once installed or fitted! For detailed information see http://www.ebmpapst.com/general conditions

* current measured at nominal voltage

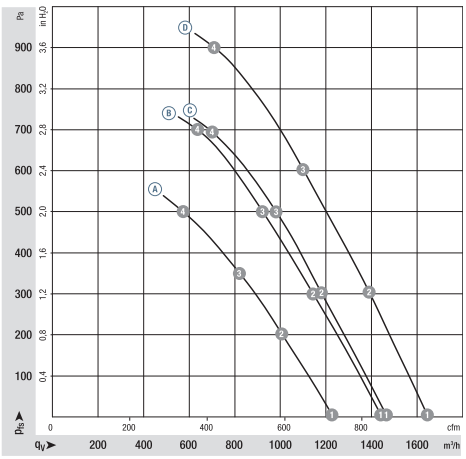


**Cable assignment:**

Red = UN
Yellow = 0-10 VDC
White = Speed monitoring output
Blue = GND

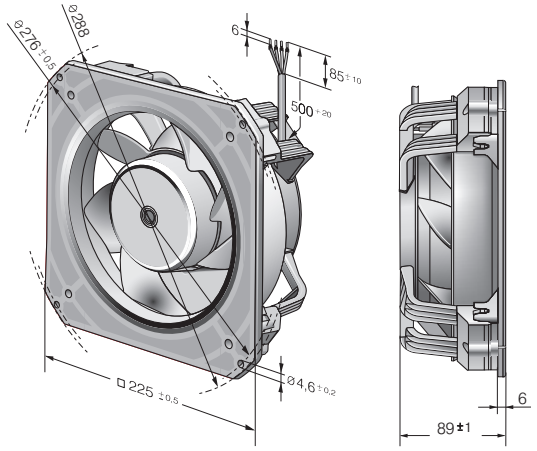

max. 2070 m³/h

# DC axial fans

## Ø 250 mm

- **Material:** Wall ring: Die-cast aluminium
  Blades: Plastic (PP)
  Rotor: Thick layer passivated
- **Number of blades:** 7
- **Direction of air flow:** "V"
- **Direction of rotation:** Counter-clockwise, seen on rotor
- **Insulation class:** "B"
- **Mounting position:** Any
- **Condensate discharges:** On rotor side
- **Operation mode:** Continuous operation (S1)
- **Bearings:** Maintenance-free ball bearings

| Nominal data | | Curve | Nominal voltage | Voltage range | Air flow | Speed / rpm | Input power | Current draw | Max. back-pressure | Perm. amb. temp. | Technical features and electrical connections |
|---|---|---|---|---|---|---|---|---|---|---|---|
| **Type** | **Motor** | | **VDC** | **VDC** | **m³/h** | **rpm** | **W** | **A** | **Pa** | **°C** | |
| **W1G250-HJ87 -02** | M1G 074-BF | A | 24 | 16-28 | 2070 | 3090 | 120 | 6,80 | 150 | -25...+60 | p. 254 / E) |
| **W1G250-HJ63 -02** | M1G 074-BF | B | 48 | 36-57 | 2070 | 3090 | 120 | 3,40 | 150 | -25...+60 | p. 254 / E) |

Subject to alternations

**Curve:**

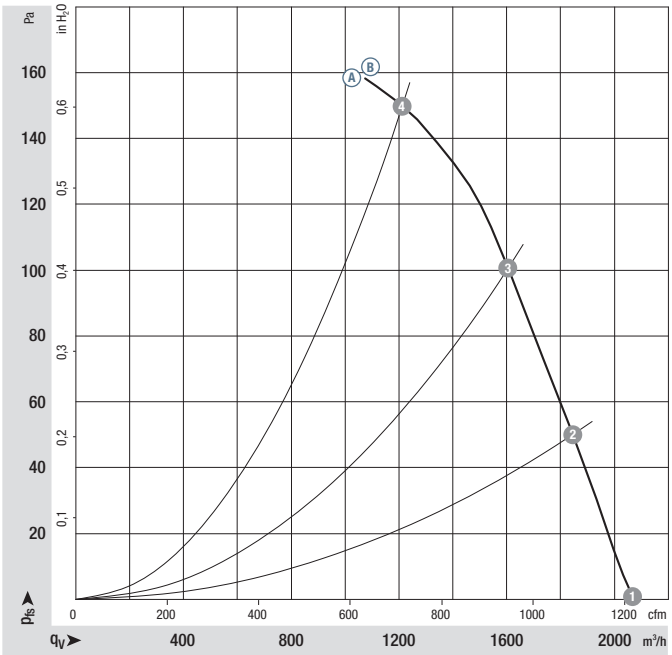


| | | n rpm | $P_{ed}$ W | I A | $L_WA$ dB(A) |
|---|---|---|---|---|---|
| A | 1 | 3090 | 120 | 6,80 | 74 |
| A | 2 | 2950 | 124 | 7,10 | 73 |
| A | 3 | 2820 | 127 | 7,43 | 73 |
| A | 4 | 2730 | 130 | 7,80 | 78 |
| B | 1 | 3090 | 120 | 3,40 | 74 |
| B | 2 | 2950 | 124 | 3,55 | 73 |
| B | 3 | 2820 | 127 | 3,74 | 73 |
| B | 4 | 2730 | 130 | 3,90 | 78 |

Air performance measured as per: ISO 5801, Installation category A, without protection against accidental contact. Suction-side noise levels: LWA as per ISO 13347, LpA measured at 1 m distance to fan axis. The acoustic values given are only valid under the measurment conditions listed and may vary depending on the installation situation. With any deviation to the standard setup, the specific values have to be checked and reviewed once installed or fitted!
For detailed information see http://www.ebmpapst.com/general conditions



ebmpapst

- **Technical features:** See electrical connections p. 254
- **EMC:** Interference emission acc. to EN 55022 (Class B)
  Interference immunity acc. to EN 61000-6-2 (industrial environment)
- **Electrical connection:** Via terminal strip
- **Protection class:** I
- **Product conforming to standards:** EN 60950-1

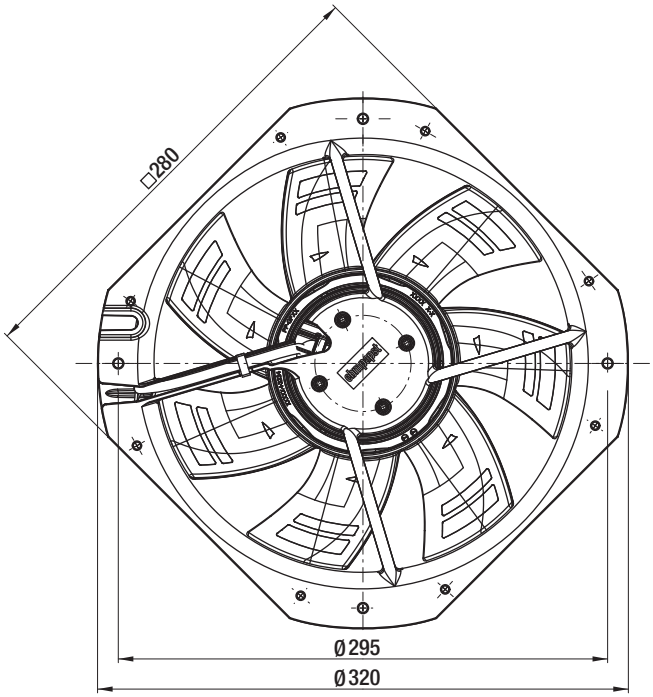


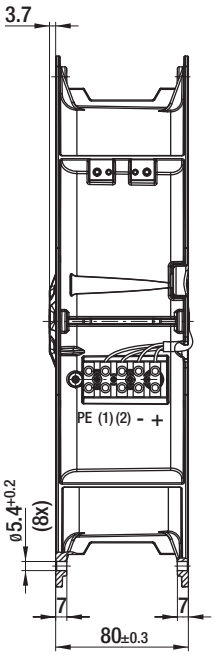


(1) Control input "V"
(2) Speed output

max. 2345 m³/h

# DC axial fans – HyBlade®

## Ø 300 mm

- **Material:** Guard grille: Steel, phosphated and coated in black plastic
  Wall ring: Sheet steel, pre-galvanised and coated in black plastic
  Blades: Plastic (PP)
  Rotor: Coated in black
- **Number of blades:** 5
- **Direction of air flow:** "V"
- **Direction of rotation:** Counter-clockwise, seen on rotor
- **Type of protection:** IP 42
- **Insulation class:** "B"
- **Mounting position:** Any
- **Condensate discharges:** None
- **Operation mode:** Continuous operation (S1)
- **Bearings:** Maintenance-free ball bearings

| Nominal data | | Curve | Nominal voltage | Voltage range | Air flow | Speed / rpm | Input power | Current draw | Max. back-pressure | Perm. amb. temp. | Technical features and electrical connections |
|---|---|---|---|---|---|---|---|---|---|---|---|
| **Type** | **Motor** | | **VDC** | **VDC** | **m³/h** | **rpm** | **W** | **A** | **Pa** | **°C** | |
| ***1G 300** | M1G 074-CF | A | 24 | 16-28 | 2320 | 1830 | 80 | 3,80 | 100 | -25..+60 | p. 258 / J5) |
| ***1G 300** | M1G 074-CF | B | 48 | 36-57 | 2345 | 1830 | 80 | 1,90 | 100 | -25..+60 | p. 258 / J5) |

Subject to alternations

**Curve:**

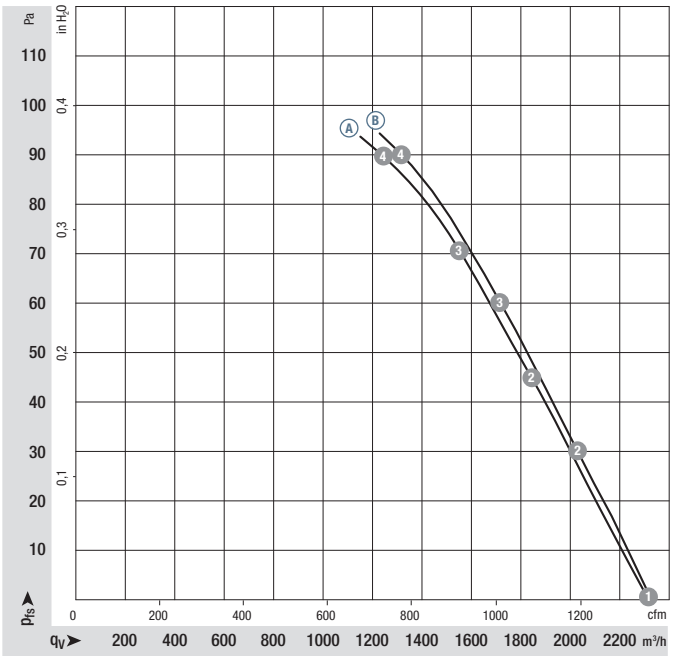


| | | n rpm | $P_{ed}$ W | I A | $L_WA$ dB(A) |
|---|---|---|---|---|---|
| A | 1 | 1810 | 80 | 3,80 | 67 |
| A | 2 | 1730 | 86 | 4,03 | 67 |
| A | 3 | 1690 | 87 | 4,10 | 66 |
| A | 4 | 1635 | 89 | 4,21 | 70 |
| B | 1 | 1870 | 87 | 2,00 | 68 |
| B | 2 | 1805 | 90 | 2,10 | 67 |
| B | 3 | 1765 | 91 | 2,13 | 67 |
| B | 4 | 1695 | 92 | 2,19 | 69 |

Air performance measured as per: ISO 5801, Installation category A, with ebm-papst inlet nozzle without protection against accidental contact. Suction-side noise levels: LWA as per ISO 13347, LpA measured at 1 m distance to fan axis. The acoustic values given are only valid under the measurment conditions listed and may vary depending on the installation situation. With any deviation to the standard setup, the specific values have to be checked and reviewed once installed or fitted!
For detailed information see http://www.ebmpapst.com/general conditions



ebmpapst

- **Technical features:** See electrical connections p. 258
- **EMC:** Interference emission acc. to EN 55022 (Class B)
  Interference immunity acc. to EN 61000-6-2 (industrial environment)
- **Cable exit:** lateral
- **Product conforming to standards:** EN 60950-1
- **Approvals:** GOST, CSA C22.2 Nr. 77, UL 1004-1

| Direction of air flow | "V" Without attachments | Mass without attachments kg | "V" With full round nozzle | Mass with full round nozzle kg | "V" With guard grille for short nozzle | Mass with guard grille for short nozzle kg |
|---|---|---|---|---|---|---|
| "V" | A1G 300-AC19 -54 | 1,8 | W1G 300-DC19 -54 | 3,8 | S1G 300-AC19 -54 | 2,8 |
| "V" | A1G 300-AC33 -54 | 1,8 | W1G 300-DC33 -54 | 3,8 | S1G 300-AC33 -54 | 3,1 |

**A1G 300**

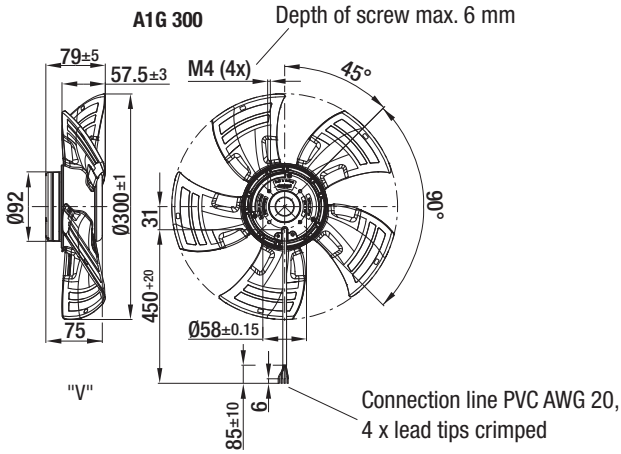


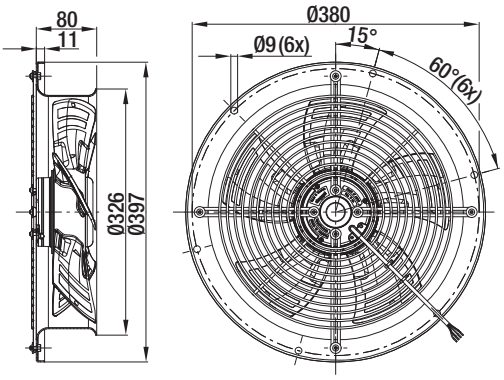


**W1G 300**

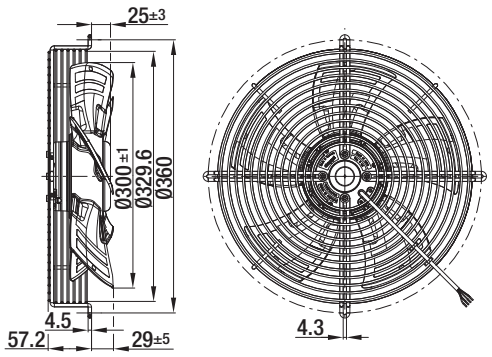


**S1G 300**

# DC centrifugal fans

| | |
|---|---|
| DC centrifugal fan overview | **91** |
| DC centrifugal fans | **93** |
| DC tangential fans | **134** |
| DC centrifugal fans and blowers | **136** |

# DC centrifugal fans

*Technical information*

**Product line**
Our centrifugal product line includes fans for every application. Whether as free-running impellers with a diameter between 97 mm and 225 mm or as assemblies in a ready-to-install, compact housing with inlet nozzle with an edge length between 51 mm and 270 mm. Of course, all models feature high-efficiency, brushless motor technology.

**Electronic protection against reverse polarity**
ebm-papst DC fans have electronically commutated drives with electronic protection against reverse polarity.The electronics are conveniently located in the fan hub.

**Product life expectancy**
A distinctive feature of DC fan technology is the convincingly high product life expectancy. Thanks to the excellent efficiency of the brushless drives, the thermal load of the bearings is reduced, thus considerably increasing the life expectancy of the fans.

**Type of protection**
DC fans with sleeve and ball bearings are powered by class E insulated motors. All ebm-papst fans conform to the requirements of type of protection IP 20. Fans conforming to IP 54 / IP 68 and special types of protection are also available.

**Voltage range**
Many of our DC fans can be operated on voltages that are up to 50% lower and 25% higher than their nominal voltage (see Voltage range in the technical tables). This enables the air performance to be adapted to the cooling requirements and allows the noise to be reduced, even if the fan does not have a control input.

**Closed-loop speed control and monitoring**
Closed-loop speed control and function monitoring are becoming increasingly important in many applications. ebm-papst offers many fans in the standard design with a control input and open collector speed signal.

**S-Force centrifugal – RadiCal**
The new S-Force centrifugal fans provide peak performance among fans of this type. With air flow capacity of over 1500 m³/h and a pressure build-up of up to 1000 pascals, the highest heat flows are manageable. In addition, the models are extremely efficient due to the multi-pole, electronically commutated drive motors and can be adapted individually to every application thanks to intelligent motor features. Some models use our new, highly efficient RadiCal impellers.

# Centrifugal fans for DC operation

## Overview of air performance

| Dimensions | Series | Air flow | Page |
|---|---|---|---|
| mm | | m³/h | |
| 105 x 59 x 79 | RV 40 | 18...24 | 93 |
| ☐ 51 x 15 | RLF 35 | 9,6 | 94 |
| ☐ 76 x 27 | RL 48 | 22...28 | 95 |
| 97 x 93,5 x 33 | RL 65 | 56...61 | 96 |
| ☐ 121 x 37 | RL 90 N | 40...55 | 97 |
| ☐ 127 x 25 | RLF 100 | 64...80 | 98 |
| ☐ 135 x 38 | RG 90 N | 55 | 99 |
| ☐ 180 x 40 | RG 125 N | 60...137 | 100 |
| ☐ 220 x 56 | RG 160 N | 139...209 | 101 |
| ☐ 220 x 56 | RG 160 NTD | 59...444 | 102 |
| ☐ 225 x 85 | RG 190 TD | 630...930 | 103 |
| ☐ 270 x 99 | RG 220 TD | 1090...1280 | 104 |
| ☐ 270 x 119 | RG 225 TD | 1040...1450 | 105 |
| Ø 97 x 41 | RET 97 TD | 220 | 106 |
| Ø 104 x 25 | REF 100 | 86...104 | 107 |
| Ø 101 x 52 | RER 101 | 162...190 | 108 |
| Ø 120 x 54 | RER 120 TD | 320...390 | 109 |
| Ø 120 | R1G 120 | 250 | 110 |
| Ø 138 x 35 | RER 125 N | 110...166 | 112 |
| Ø 133 x 91 | RER 133 TD | 460...565 | 113 |
| Ø 165 x 51 | RER 160 N | 255 | 114 |
| Ø 165 x 51 | RER 160 NTD | 66...354 | 115 |
| Ø 175 x 55 | REF 175 TD | 800 | 116 |
| Ø 175 x 69 | RER 175 TD | 600...980 | 117 |
| Ø 190 x 69 | RER 190 TD | 650...970 | 118 |
| Ø 190 | R3G 190 | 880...930 | 120 |
| Ø 220 | R3G 220 | 1185...1210 | 122 |
| Ø 220 x 71 | RER 220 TD | 1090...1280 | 124 |
| Ø 225 x 99 | RER 225 TD | 1190...1600 | 125 |
| Ø 225 | R3G 225 | 1275...1400 | 126 |
| Ø 250 | R3G 250 | 1640...1650 | 128 |
| Ø 280 | R3G 280 | 2175...2210 | 130 |
| Ø 310 | R3G 310 | 2380...2420 | 132 |
| 201...413 x 50 x 48 | QG 030 | 75...155 | 134 |
| Ø 85 | *1G 085 | 95 | 136 |
| Ø 97 | *1G 097 | 95 | 138 |
| Ø 108 | *1G 108 | 200 | 140 |
| Ø 120 | *1G 120 | 255 | 142 |
| Ø 133 | *1G 133 | 225 | 144 |
| Ø 140 | *1G 140 | 400...410 | 146 |
| Ø 146 | *1G 146 | 465...470 | 148 |
| Ø 160 | *1G 160 | 505 | 150 |
| Ø 133 | D1G 133 | 700 | 152 |
| Ø 133 | D1G 133 | 1020 | 154 |
| Ø 146 | D1G 146 | 1000 | 156 |
| Ø 160 | D1G 160 | 980 | 158 |

Subject to alternations

# Centrifugal fans for DC operation

## Overview of technically feasible designs

| | Centrifugal fans | | | | | | | | | | | | | | | | | | |
|---|---|---|---|---|---|---|---|---|---|---|---|---|---|---|---|---|---|---|---|
| | Series | Dimensions mm | VDE, UL, CSA | Sintec sleeve bearings/ball bearings | Speed signal | Go / No-go alarm | Alarm with limit speed | External temperature sensor | Internal temperature sensor | PWM control input | Analogue control input | Multi-option control input | Humidity protection | IP >= IP 54 | IP >= IP 68 | Salt fog protection | Page |
| | | | | | | | | OPTIONAL | | | | | | | | | p. |
| | RV 40 | 105 x 59 x 79 | • | ■ | • | – | – | – | – | – | – | – | • | – | – | – | 93 |
| | RLF 35 | 51 x 51 x 15 | ja | ■ | • | – | – | – | – | • | – | – | • | – | – | – | 94 |
| | RL 48 | 76 x 76 x 27 | ja | ■ | • | • | • | • | • | • | • | – | • | – | – | – | 95 |
| | RL 65 | 97 x 93,5 x 33 | ja | ■ | • | • | • | • | • | • | • | – | • | – | – | – | 96 |
| | RL 90 N | 121 x 121 x 37 | ja | □/■ | • | • | • | • | • | • | • | – | • | • | • | • | 97 |
| | RLF 100 | 127 x 127 x 25 | ja | ■ | • | • | • | • | • | • | • | – | • | • | – | – | 98 |
| | RG 90 N | 135 x 135 x 38 | ja | □/■ | • | • | • | • | • | • | • | – | • | • | • | • | 99 |
| | RG 125 N | 180 x 180 x 40 | ja | ■ | • | • | • | • | • | • | • | – | • | • | • | • | 100 |
| | RG 160 N | 220 x 220 x 56 | ja | ■ | • | • | • | • | • | • | • | – | • | • | – | • | 101 |
| | RG 160 NTD | 220 x 220 x 56 | ja | ■ | • | • | • | • | • | • | • | – | • | • | – | • | 102 |
| S-Force | RG 190 TD | 225 x 225 x 85 | ja | ■ | • | • | • | • | • | • | • | • | • | • | – | • | 103 |
| S-Force | RG 220 TD | 270 x 270 x 99 | ja | ■ | • | • | • | • | • | • | • | – | • | • | – | • | 104 |
| S-Force | RG 225 TD | 270 x 270 x 132 | ja | ■ | • | • | • | • | • | • | • | – | • | • | – | • | 105 |
| S-Force | RET 97 TD | Ø 97 x 41 | ja | ■ | • | • | • | • | • | • | • | – | • | – | – | – | 106 |
| | REF 100 | Ø 100 x 25 | ja | ■ | • | • | • | • | • | • | • | – | • | • | – | – | 107 |
| | RER 101 | Ø 101 x 52 | ja | ■ | • | • | • | • | • | • | • | – | • | – | – | – | 108 |
| S-Force | RER 120 TD | Ø 120 x 54 | ja | ■ | • | • | • | • | • | • | • | – | • | – | – | – | 109 |
| | RER 125 N | Ø 138 x 35 | ja | ■ | • | • | • | • | • | • | • | – | • | • | • | • | 112 |
| S-Force | RER 133 TD | Ø 133 x 91 | ja | ■ | • | • | • | • | • | • | • | • | • | • | – | • | 113 |
| | RER 160 N | Ø 165 x 51 | ja | ■ | • | • | • | • | • | • | • | – | • | • | – | • | 114 |
| S-Force | RER 160 NTD | Ø 165 x 51 | ja | ■ | • | • | • | • | • | • | • | – | • | • | – | – | 115 |
| S-Force | REF 175 TD | Ø 175 x 55 | ja | ■ | • | • | • | • | • | • | • | • | • | • | – | – | 116 |
| S-Force | RER 175 TD | Ø 175 x 69 | ja | ■ | • | • | • | • | • | • | • | • | • | • | – | • | 117 |
| S-Force | RER 190 TD | Ø 190 x 69 | ja | ■ | • | • | • | • | • | • | • | • | • | • | – | • | 118 |
| S-Force | RER 220 TD | Ø 220 x 71 | ja | ■ | • | • | • | • | • | • | • | • | • | • | – | • | 124 |
| S-Force | RER 225 TD | Ø 225 x 99 | ja | ■ | • | • | • | • | • | • | • | • | • | • | – | • | 125 |
| | QG 030 | 201...413 x 50 x 48 | ja | □/■ | • | – | – | – | – | – | – | – | • | – | – | – | 134 |
| | Subject to alternations | | | | | | | | | | | | | | | | |

* approvals-applied for

– not yet available
• available

□ Sleeve bearings
■ Ball bearings

Please note that these special versions are not possible for all voltages and speeds, and not in all combinations. The special versions are designed for specific customers and projects. As a rule they are not available off the shelf and are tied to minimum volumes.

Please consult your customer support representative about the feasibility of your special variant.

## Optional special versions (see page 12)

On the catalogue pages and in the overview on page 12, we provide information about the special designs that are technically feasible in the fan series. Please note that these special versions are not possible for all voltages and speeds, and not in all combinations. The special versions are designed for specific customers and projects and are not available off the shelf usually.

max. 24 m³/h

# DC centrifugal fans

## Series RV 40 105 x 59 x 79 mm

- **Material:** Scroll housing: GRP[1)]
  Impeller: GRP[1)]
- **Direction of air flow:** Axial: Intake
  Centrifugal: Exhaust
- **Connection:** Via single wires AWG 26, TR 64
- **Highlights:** Forwards-curved impeller
- **Mass:** 100 g

- **Possible special versions:**
  (See chapter DC fans - specials)
  - Speed signal
  - Protection against moisture

1) Fibreglass-reinforced plastic

| Nominal data | Air flow | Air flow | Nominal voltage | Voltage range | Sound power level | Sintec sleeve bearings / Ball bearings | Input power | Nominal speed | Temperature range | Service life $L_{10}$ (40 °C) ebm-papst Standard / Service life $L_{10}$ ($T_{max}$) ebm-papst Standard | Life expectancy $L_{10IPC}$ (40 °C) see page 17 | Curve |
|---|---|---|---|---|---|---|---|---|---|---|---|---|
| **Type** | **m³/h** | **CFM** | **VDC** | **VDC** | **Bel(A)** | □/■ | **Watts** | **rpm** | **°C** | **Hours** | **Hours** | |
| RV 40-18/12 L | 18 | 10,6 | **12** | 9...16 | 4,0 | ■ | 2,0 | 3 900 | -20...+70 | 70 000 / 35 000 | 117 500 | ① |
| RV 40-18/12 H | 24 | 14,1 | **12** | 9...16 | 5,0 | ■ | 4,5 | 4 800 | -20...+70 | 50 000 / 25 000 | 85 000 | ② |

Subject to alternations

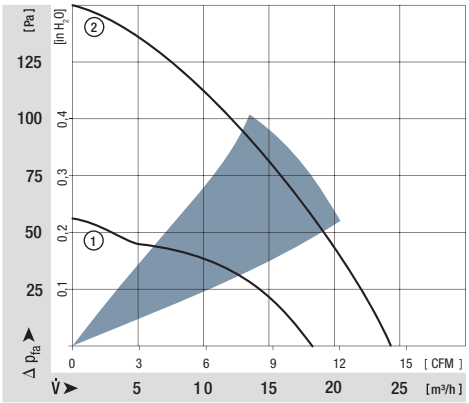


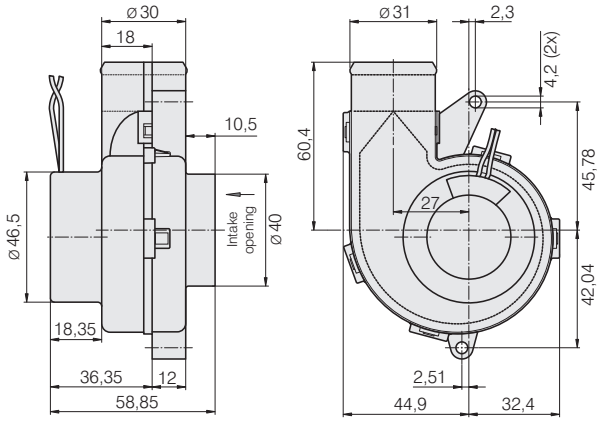

max. 9,6 m³/h

# DC centrifugal fans

## Series RLF 35 51 x 51 x 15 mm

- **Material:** Scroll housing: GRP[1)]
  Impeller: GRP[1)]
- **Direction of air flow:** Axial: Intake
  Centrifugal: Exhaust
- **Connection:** Via single wires AWG 26, TR 64
- **Highlights:** Forwards-curved impeller
- **Mass:** 40 g

- **Possible special versions:**
  (See chapter DC fans - specials)
  - Speed signal
  - PWM control input
  - Protection against moisture

1) Fibreglass-reinforced plastic

| Nominal data | Air flow | Air flow | Nominal voltage | Voltage range | Sound power level | Sintec sleeve bearings / Ball bearings | Input power | Nominal speed | Temperature range | Service life $L_{10}$ (40 °C) ebm-papst Standard / Service life $L_{10}$ ($T_{max}$) ebm-papst Standard | Life expectancy $L_{10IPC}$ (40 °C) see page 17 | Curve |
|---|---|---|---|---|---|---|---|---|---|---|---|---|
| **Type** | **m³/h** | **CFM** | **VDC** | **VDC** | **Bel(A)** | □/■ | **Watts** | **rpm** | **°C** | **Hours** | **Hours** | |
| RLF 35-8/12 N | 9,6 | 5,7 | **12** | 8...13,2 | 5,5 | ■ | 3,5 | 6 700 | -20...+70 | 60 000 / 30 000 | 102 500 | ① |
| RLF 35-8/14 N | 9,6 | 5,7 | **24** | 14...28 | 5,5 | ■ | 4,3 | 6 700 | -20...+70 | 60 000 / 30 000 | 102 500 | ① |

Subject to alternations

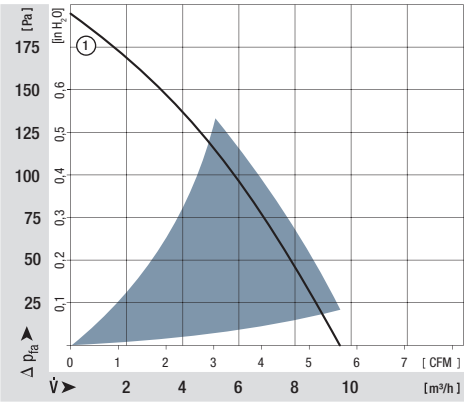


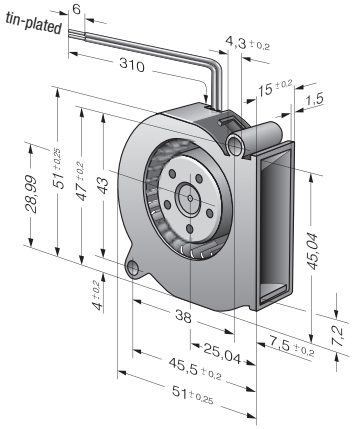




ebmpapst

max. 28 m³/h

# DC centrifugal fans

## Series RL 48 76 x 76 x 27 mm

- **Material:** Scroll housing: GRP[1)] Impeller: GRP[1)]
- **Direction of air flow:** Axial: Intake Centrifugal: Exhaust
- **Connection:** Via single wires AWG 26, TR 64
- **Highlights:** Forwards-curved impeller
- **Mass:** 75 g

- **Possible special versions:** (See chapter DC fans - specials)
  - Speed signal
  - Go / No-go alarm
  - Alarm with limit speed
  - External temperature sensor
  - Internal temperature sensor
  - PWM control input
  - Analogue control input
  - Protection against moisture

1) Fibreglass-reinforced plastic

| Nominal data | Air flow | Air flow | Nominal voltage | Voltage range | Sound power level | Sintec sleeve bearings / Ball bearings | Input power | Nominal speed | Temperature range | Service life $L_{10}$ (40 °C) ebm-papst Standard / Service life $L_{10}$ ($T_{max}$) ebm-papst Standard | Life expectancy $L_{10IPC}$ (40 °C) see page 17 | Curve |
|---|---|---|---|---|---|---|---|---|---|---|---|---|
| **Type** | **m³/h** | **CFM** | **VDC** | **VDC** | **Bel(A)** | □/■ | **Watts** | **rpm** | **°C** | **Hours** | **Hours** | |
| RL 48-19/12 ML | 22 | 12,9 | **12** | 8...15 | 5,3 | ■ | 5,0 | 3 500 | -20...+70 | 70 000 / 35 000 | 117 500 | ① |
| RL 48-19/12 | 28 | 16,5 | **12** | 8...13,5 | 5,7 | ■ | 4,6 | 4 400 | -20...+70 | 60 000 / 30 000 | 102 500 | ② |
| RL 48-19/14 ML | 22 | 12,9 | **24** | 18...28 | 5,3 | ■ | 5,0 | 3 500 | -20...+70 | 70 000 / 35 000 | 117 500 | ① |
| RL 48-19/14 | 28 | 16,5 | **24** | 18...26,4 | 5,7 | ■ | 4,4 | 4 400 | -20...+70 | 60 000 / 30 000 | 102 500 | ② |

Subject to alternations

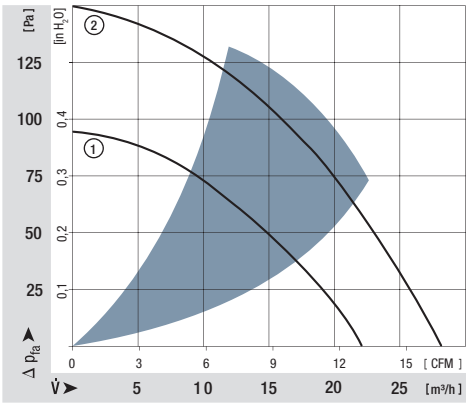


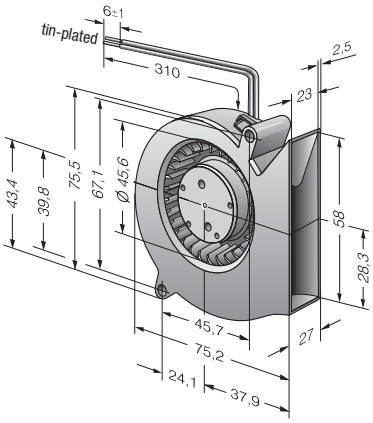

max. 61 m³/h

# DC centrifugal fans

## Series RL 65 97 x 93,5 x 33 mm

- **Material:** Scroll housing: GRP[1)]
  Impeller: GRP[1)]
- **Direction of air flow:** Axial: Intake
  Centrifugal: Exhaust
- **Connection:** Via single wires AWG 26, TR 64
- **Highlights:** Forwards-curved impeller
- **Mass:** 170 g

- **Possible special versions:**
  (See chapter DC fans - specials)
  - Speed signal
  - Go / No-go alarm
  - Alarm with limit speed
  - External temperature sensor
  - Internal temperature sensor
  - PWM control input
  - Analogue control input
  - Protection against moisture

1) Fibreglass-reinforced plastic

| Nominal data | Air flow | Air flow | Nominal voltage | Voltage range | Sound power level | Sintec sleeve bearings / Ball bearings | Input power | Nominal speed | Temperature range | Service life $L_{10}$ (40 °C) ebm-papst Standard / Service life $L_{10}$ ($T_{max}$) ebm-papst Standard | Life expectancy $L_{10IPC}$ (40 °C) see page 17 | Curve |
|---|---|---|---|---|---|---|---|---|---|---|---|---|
| **Type** | **m³/h** | **CFM** | **VDC** | **VDC** | **Bel(A)** | □ / ■ | **Watts** | **rpm** | **°C** | **Hours** | **Hours** | |
| RL 65-21/12 | 56 | 33 | **12** | 6,8...13,8 | 6,6 | ■ | 15,0 | 4 500 | -20...+70 | 60 000 / 30 000 | 102 500 | ① |
| RL 65-21/12 H | 61 | 36 | **12** | 6,8...13,2 | 6,8 | ■ | 19,2 | 4 900 | -20...+55 | 55 000 / 40 000 | 92 500 | ② |
| RL 65-21/14 | 56 | 33 | **24** | 12...26,4 | 6,6 | ■ | 14,0 | 4 500 | -20...+70 | 60 000 / 30 000 | 102 500 | ① |
| RL 65-21/14 H | 61 | 36 | **24** | 12...26,4 | 6,8 | ■ | 18,0 | 4 900 | -20...+60 | 55 000 / 35 000 | 92 500 | ② |

Subject to alternations

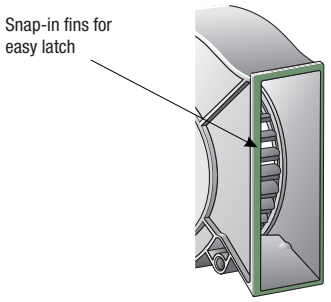


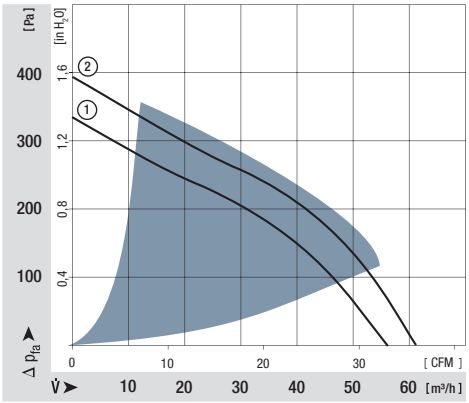


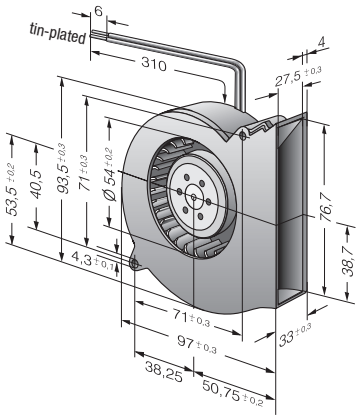




ebmpapst

max. 55 m³/h

# DC centrifugal fans

## Series RL 90 N 121 x 121 x 37 mm

- **Material:** Scroll housing: GRP[1)]
  Impeller: GRP[1)]
  Housing base: Sheet steel
- **Direction of air flow:** Axial: Intake
  Centrifugal: Exhaust
- **Connection:** Via single wires AWG 22, TR 64
- **Highlights:** Forwards-curved impeller
- **Mass:** 420 g

- **Possible special versions:**
  (See chapter DC fans - specials)
  - Speed signal
  - Go / No-go alarm
  - Alarm with limit speed
  - External temperature sensor
  - Internal temperature sensor
  - PWM control input
  - Analogue control input
  - Protection against moisture
  - Protection against salt fog
  - Type of protection: IP 54 / IP 68

1) Fibreglass-reinforced plastic

| Nominal data | Air flow | Air flow | Nominal voltage | Voltage range | Sound power level | Sintec sleeve bearings / Ball bearings | Input power | Nominal speed | Temperature range | Service life $L_{10}$ (40 °C) ebm-papst Standard / Service life $L_{10}$ ($T_{max}$) ebm-papst Standard | Life expectancy $L_{10IPC}$ (40 °C) see page 17 | Curve |
|---|---|---|---|---|---|---|---|---|---|---|---|---|
| **Type** | **m³/h** | **CFM** | **VDC** | **VDC** | **Bel(A)** | □/■ | **Watts** | **rpm** | **°C** | **Hours** | **Hours** | |
| RL 90-18/12 N | 40 | 23,5 | **12** | 7...15 | 5,8 | ■ | 6,3 | 2 500 | -30...+75 | 62 500 / 27 500 | 105 000 | ① |
| RL 90-18/14 NG | 40 | 23,5 | **24** | 12...28 | 5,8 | □ | 5,6 | 2 500 | -20...+75 | 62 500 / 27 500 | 105 000 | ① |
| RL 90-18/14 N | 40 | 23,5 | **24** | 12...28 | 5,8 | ■ | 5,6 | 2 500 | -30...+75 | 62 500 / 27 500 | 105 000 | ① |
| RL 90-18/18 NH | 55 | 32,4 | **48** | 36...53 | 6,9 | ■ | 14,7 | 3 500 | -30...+65 | 32 500 / 17 500 | 55 000 | ② |

Subject to alternations

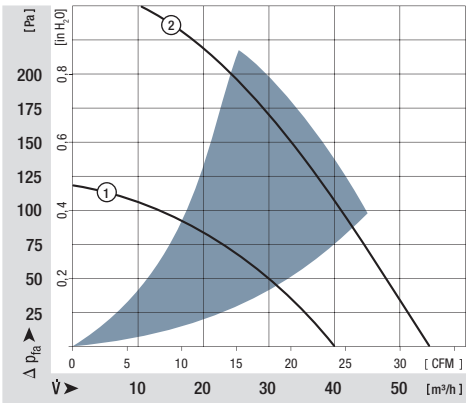


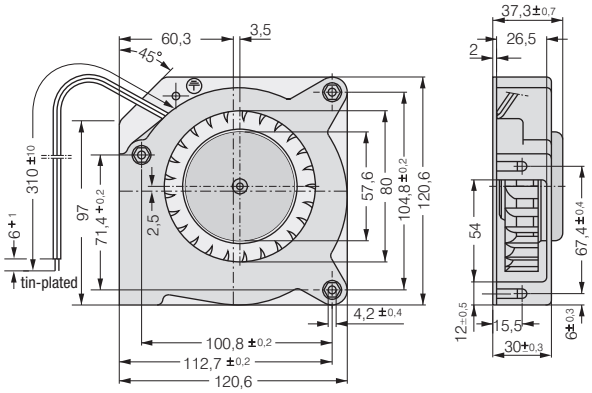


Screw clip M4 or 8-32UNC. Screw-in depth max. 12.5 min. 9.0

max. 80 m³/h

# DC centrifugal fans

## Series RLF 100 127 x 127 x 25 mm

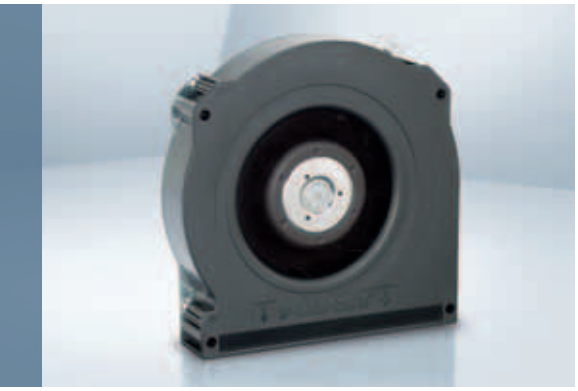

- **Material:** Scroll housing: GRP[1)]
  Impeller: GRP[1)]
  Housing base: Sheet steel
- **Direction of air flow:** Axial: Intake
  Centrifugal: Exhaust
- **Connection:** Via single wires AWG 22, TR 64
- **Highlights:** Optional protective cap for outlet opening
  Backwards-curved impeller
- **Mass:** 320 g

- **Possible special versions:**
  (See chapter DC fans - specials)
  - Speed signal
  - Go / No-go alarm
  - Alarm with limit speed
  - External temperature sensor
  - Internal temperature sensor
  - PWM control input
  - Analogue control input
  - Protection against moisture
  - Type of protection: IP 54

1) Fibreglass-reinforced plastic

| Nominal data | Air flow | Air flow | Nominal voltage | Voltage range | Sound power level | Sintec sleeve bearings / Ball bearings | Input power | Nominal speed | Temperature range | Service life $L_{10}$ (40 °C) ebm-papst Standard / Service life $L_{10}$ ($T_{max}$) ebm-papst Standard | Life expectancy $L_{10IPC}$ (40 °C) see page 17 | Curve |
|---|---|---|---|---|---|---|---|---|---|---|---|---|
| **Type** | **m³/h** | **CFM** | **VDC** | **VDC** | **Bel(A)** | □/■ | **Watts** | **rpm** | **°C** | **Hours** | **Hours** | |
| RLF 100-11/12 | 64 | 37,7 | **12** | 8...15 | 6,4 | ■ | 8,0 | 5 100 | -20...+75 | 80 000 / 30 000 | 135 000 | ① |
| RLF 100-11/14 | 64 | 37,7 | **24** | 16...30 | 6,4 | ■ | 8,0 | 5 100 | -20...+75 | 80 000 / 30 000 | 135 000 | ① |
| RLF 100-11/18 | 64 | 37,7 | **48** | 36...60 | 6,4 | ■ | 8,6 | 5 100 | -20...+75 | 80 000 / 30 000 | 135 000 | ① |
| High speed models with Open Collector Tacho and PWM speed control. | | | | | | | | | | | | |
| RLF 100-11/12/2 HP-200 | 80 | 47,1 | **12** | 10...13,2 | 7,5 | ■ | 18,6 | 6 400 | -20...+60 | 72 500 / 45 000 | 122 500 | ② |
| RLF 100-11/18/2 HP-182 | 80 | 47,1 | **48** | 43...53 | 7,5 | ■ | 17,0 | 6 400 | -20...+70 | 72 500 / 35 000 | 122 500 | ② |

Subject to alternations

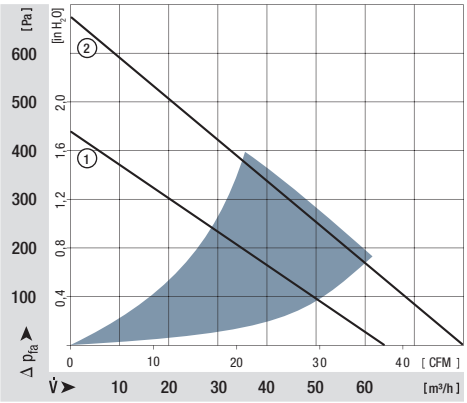


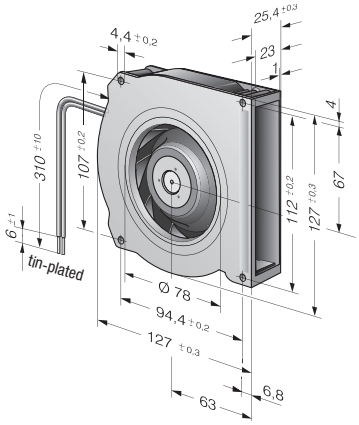




ebmpapst

max. 55 m³/h

# DC centrifugal fans

## Series RG 90 N 135 x 135 x 38 mm

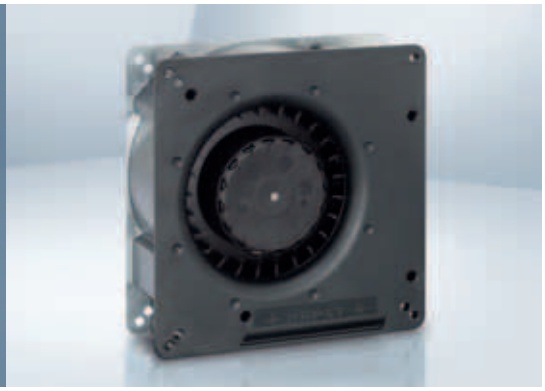

- **Material:** Scroll housing: GRP[1)]
  Impeller: GRP[1)]
  Housing base: Sheet steel
- **Direction of air flow:** Axial: Intake
  Centrifugal: Exhaust
- **Connection:** Via single wires AWG 22, TR 64
  48 V model: Flat plug
  6.3 x 0.8 mm for protective earth
- **Highlights:** Forwards-curved impeller
- **Mass:** 440 g

1) Fibreglass-reinforced plastic

- **Possible special versions:**
  (See chapter DC fans - specials)
  - Speed signal
  - Go / No-go alarm
  - Alarm with limit speed
  - External temperature sensor
  - Internal temperature sensor
  - PWM control input
  - Analogue control input
  - Protection against moisture
  - Protection against salt fog
  - Type of protection: IP 54 / IP 68

| Nominal data | Air flow | Air flow | Nominal voltage | Voltage range | Sound power level | Sintec sleeve bearings / Ball bearings | Input power | Nominal speed | Temperature range | Service life $L_{10}$ (40 °C) ebm-papst Standard / Service life $L_{10}$ ($T_{max}$) ebm-papst Standard | Life expectancy $L_{10IPC}$ (40 °C) see page 17 | Curve |
|---|---|---|---|---|---|---|---|---|---|---|---|---|
| **Type** | **m³/h** | **CFM** | **VDC** | **VDC** | **Bel(A)** | □/■ | **Watts** | **rpm** | **°C** | **Hours** | **Hours** | |
| RG 90-18/12 N | 55 | 32,4 | **12** | 7...15 | 5,5 | ■ | 6,7 | 2 200 | -30...+75 | 62 500 / 27 500 | 105 000 | ① |
| RG 90-18/14 NG | 55 | 32,4 | **24** | 12...28 | 5,5 | □ | 6,2 | 2 200 | -10...+75 | 62 500 / 27 500 | 105 000 | ① |
| RG 90-18/14 N | 55 | 32,4 | **24** | 12...28 | 5,5 | ■ | 6,2 | 2 200 | -30...+75 | 62 500 / 27 500 | 105 000 | ① |
| RG 90-18/18 N | 55 | 32,4 | **48** | 36...56 | 5,5 | ■ | 6,1 | 2 200 | -30...+75 | 62 500 / 27 500 | 105 000 | ① |

Subject to alternations

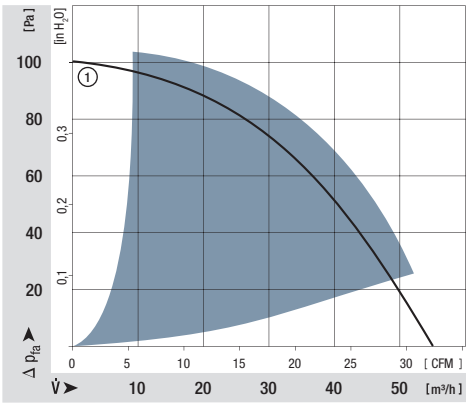


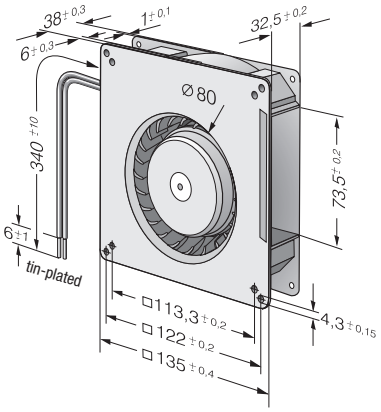

max. 137 m³/h

# DC centrifugal fans

## Series RG 125 N 180 x 180 x 40 mm

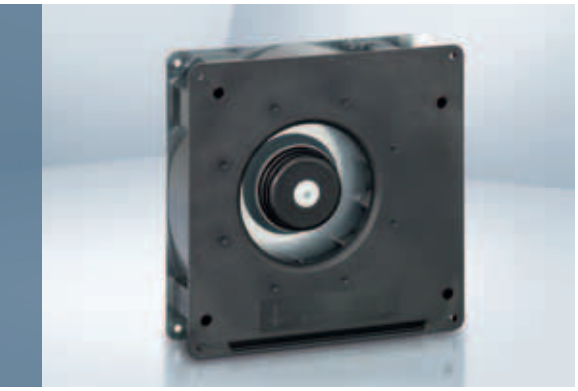

- **Material:** Scroll housing: GRP[1)]
  Impeller: GRP[1)]
  Housing base: Sheet steel
- **Direction of air flow:** Axial: Intake
  Centrifugal: Exhaust
- **Connection:** Via single wires AWG 22, TR 64
  48 V model: Flat plug
  6.3 x 0.8 mm for protective earth
- **Highlights:** Backwards-curved impeller
- **Mass:** 730 g

1) Fibreglass-reinforced plastic

- **Possible special versions:**
  (See chapter DC fans - specials)
  - Speed signal
  - Go / No-go alarm
  - Alarm with limit speed
  - External temperature sensor
  - Internal temperature sensor
  - PWM control input
  - Analogue control input
  - Protection against moisture
  - Protection against salt fog
  - Type of protection: IP 54 / IP 68

| Nominal data | Air flow | Air flow | Nominal voltage | Voltage range | Sound power level | Sintec sleeve bearings / Ball bearings | Input power | Nominal speed | Temperature range | Service life $L_{10}$ (40 °C) ebm-papst Standard / Service life $L_{10}$ ($T_{max}$) ebm-papst Standard | Life expectancy $L_{10IPC}$ (40 °C) see page 17 | Curve |
|---|---|---|---|---|---|---|---|---|---|---|---|---|
| **Type** | **m³/h** | **CFM** | **VDC** | **VDC** | **Bel(A)** | □/■ | **Watts** | **rpm** | **°C** | **Hours** | **Hours** | |
| RG 125-19/12 NM | 60,0 | 35,3 | **12** | 7...15 | 4,8 | ■ | 2,0 | 1 750 | -30...+75 | 70 000 / 30 000 | 117 500 | ① |
| RG 125-19/12 N | 87,5 | 51,5 | **12** | 7...15 | 5,8 | ■ | 5,2 | 2 550 | -30...+75 | 62 500 / 27 500 | 105 000 | ② |
| RG 125-19/14 NM | 60,0 | 35,3 | **24** | 12...28 | 4,8 | ■ | 2,0 | 1 750 | -30...+75 | 70 000 / 30 000 | 117 500 | ① |
| RG 125-19/14 N | 87,5 | 51,5 | **24** | 12...28 | 5,8 | ■ | 4,9 | 2 550 | -30...+75 | 62 500 / 27 500 | 105 000 | ② |
| RG 125-19/18 N | 87,5 | 51,5 | **48** | 36...56 | 5,8 | ■ | 4,8 | 2 550 | -30...+75 | 62 500 / 27 500 | 105 000 | ② |
| RG 125-19/18 NH | 137 | 80,6 | **48** | 36...56 | 7,0 | ■ | 19,0 | 4 000 | -20...+70 | 55 000 / 27 500 | 92 500 | ③ |

Subject to alternations

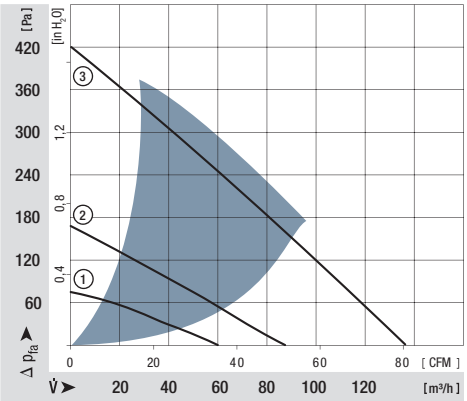


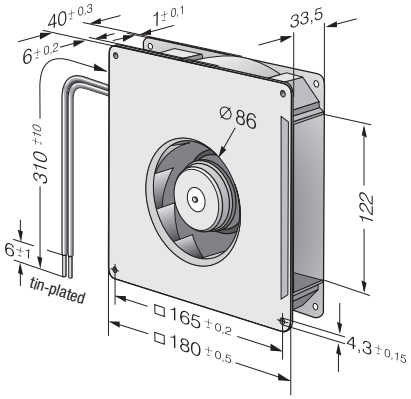




ebmpapst

max. 209 m³/h

# DC centrifugal fans

## Series RG 160 N 220 x 220 x 56 mm

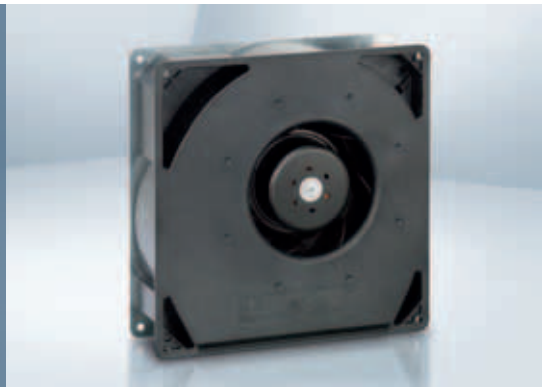

- **Material:** Scroll housing: GRP[1)]
  Impeller: GRP[1)]
  Housing base: Sheet steel
- **Direction of air flow:** Axial: Intake
  Centrifugal: Exhaust
- **Connection:** Via single wires AWG 22, TR 64
  48 V model: Flat plug
  6.3 x 0.8 mm for protective earth
- **Highlights:** Backwards-curved impeller
- **Mass:** 1,4 kg

1) Fibreglass-reinforced plastic

- **Possible special versions:**
  (See chapter DC fans - specials)
  - Speed signal
  - Go / No-go alarm
  - Alarm with limit speed
  - External temperature sensor
  - Internal temperature sensor
  - PWM control input
  - Analogue control input
  - Protection against moisture
  - Protection against salt fog
  - Type of protection: IP 54

| Nominal data | Air flow | Air flow | Nominal voltage | Voltage range | Sound power level | Sintec sleeve bearings / Ball bearings | Input power | Nominal speed | Temperature range | Service life $L_{10}$ (40 °C) ebm-papst Standard / Service life $L_{10}$ ($T_{max}$) ebm-papst Standard | Life expectancy $L_{10IPC}$ (40 °C) see page 17 | Curve |
|---|---|---|---|---|---|---|---|---|---|---|---|---|
| **Type** | **m³/h** | **CFM** | **VDC** | **VDC** | **Bel(A)** | □/■ | **Watts** | **rpm** | **°C** | **Hours** | **Hours** | |
| RG 160-28/12 NM | 139 | 81 | **12** | 7...14 | 5,6 | ■ | 7,5 | 1 900 | -20...+70 | 80 000 / 40 000 | 135 000 | ① |
| RG 160-28/12 N | 209 | 123 | **12** | 7,5...14 | 6,6 | ■ | 21,0 | 2 850 | -20...+70 | 70 000 / 35 000 | 117 500 | ② |
| RG 160-28/14 NM | 139 | 81 | **24** | 12...28 | 5,6 | ■ | 7,0 | 1 900 | -20...+70 | 80 000 / 40 000 | 135 000 | ① |
| RG 160-28/14 N | 209 | 123 | **24** | 12...28 | 6,6 | ■ | 20,0 | 2 850 | -20...+70 | 70 000 / 35 000 | 117 500 | ② |
| RG 160-28/18 N | 209 | 123 | **48** | 28...60 | 6,6 | ■ | 20,0 | 2 850 | -20...+70 | 70 000 / 35 000 | 117 500 | ② |

Subject to alternations

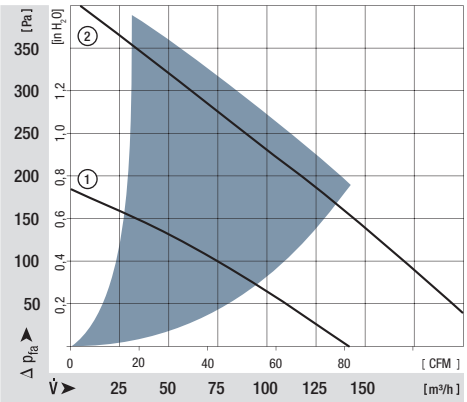


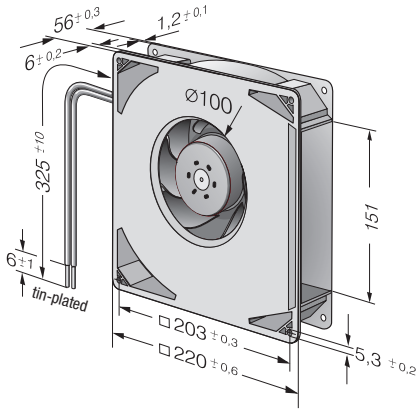

max. **444** m³/h

# DC centrifugal fans

## Series RG 160 NTD 220 x 220 x 56 mm

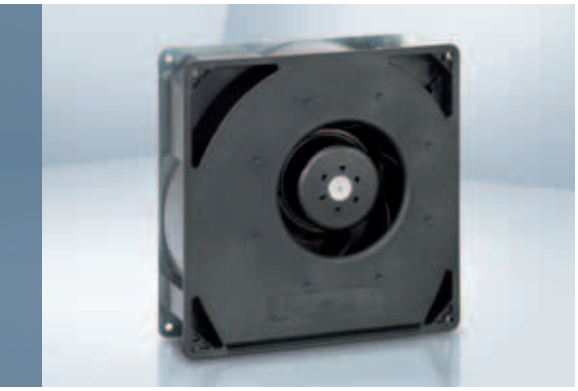

- **Material:** Scroll housing: GRP[1)]
  Impeller: GRP[1)]
  Housing base: Sheet steel
- **Direction of air flow:** Axial: Intake
  Centrifugal: Exhaust
- **Connection:** Via single wires AWG 22, TR 64
  48 V model: Flat plug
  6.3 x 0.8 mm for protective earth
- **Highlights:** 3-phase fan drive with very smooth running
  Backwards-curved impeller
- **Mass:** 1,4 kg

1) Fibreglass-reinforced plastic

- **Possible special versions:**
  (See chapter DC fans - specials)
  - Speed signal
  - Go / No-go alarm
  - Alarm with limit speed
  - External temperature sensor
  - Internal temperature sensor
  - PWM control input
  - Analogue control input
  - Protection against moisture
  - Type of protection: IP 54

| | Nominal data | Air flow | Air flow | Nominal voltage | Voltage range | Sound power level | Sintec sleeve bearings / Ball bearings | Input power | Nominal speed | Temperature range | Service life $L_{10}$ (40 °C) ebm-papst Standard / Service life $L_{10}$ ($T_{max}$) ebm-papst Standard | Life expectancy $L_{10IPC}$ (40 °C) see page 17 | Curve |
|---|---|---|---|---|---|---|---|---|---|---|---|---|---|
| | **Type** | **m³/h** | **CFM** | **VDC** | **VDC** | **Bel(A)** | □ / ■ | **Watts** | **rpm** | **°C** | **Hours** | **Hours** | |
| min. | RG 160-28/14 NTD... | 59 | 35 | **24** | 16...28 | — | ■ | 2,0 | 800 | -20...+60 | 55 000 / 35 000 | 92 500 | ① |
| max. | | 308 | 181 | | | 7,5 | | 64,0 | 4 200 | | | | ② |
| | RG 160-28/14 NTD | 308 | 181 | **24** | 16...28 | 7,5 | ■ | 64,0 | 4 200 | -20...+60 | 55 000 / 35 000 | 92 500 | ② |
| | RG 160-28/14 NTDH | 370 | 218 | **24** | 16...28 | 7,8 | ■ | 101,0 | 5 000 | -20...+60 | 50 000 / 32 500 | 85 000 | ③ |
| min. | RG 160-28/18 NTD... | 59 | 35 | **48** | 38...57 | — | ■ | 2,0 | 800 | -20...+70 | 55 000 / 27 500 | 92 500 | ① |
| max. | | 308 | 181 | | | 7,5 | | 59,0 | 4 200 | | | | ② |
| | RG 160-28/18/2 N/2 TDHHP* | 444 | 261 | **48** | 36...60 | 8,5 | ■ | 159 | 6 000 | -20...+65 | 40 000 / 22 500 | 67 500 | ④ |

Subject to alternations

Models RG 160-28/14 NTD... and RG 160-28/18 NTD... are available in customer-specific, custom-developed variants only.
The data specified here are technically feasible benchmark values. The fans can be specially adapted to your application with signal outputs and control inputs.
*The specific service life is valid when an external capacitor is wired between the plus and minus wires.
Please note the wiring suggestion.

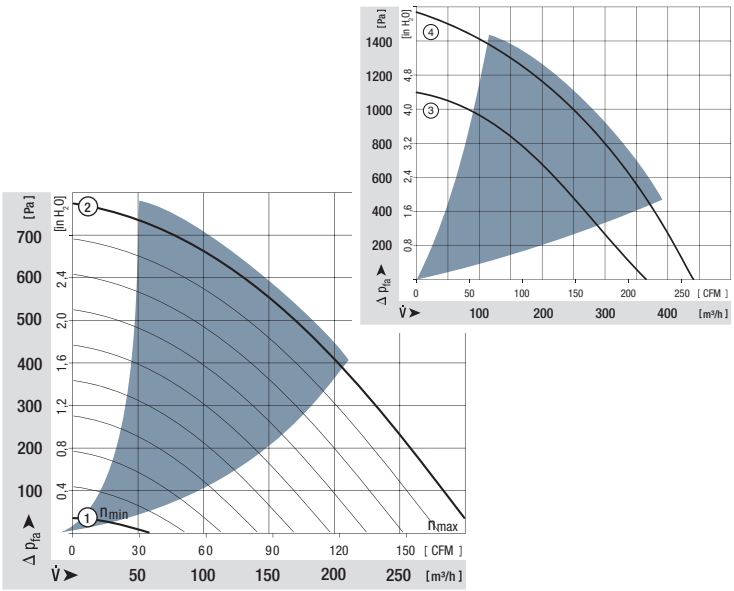


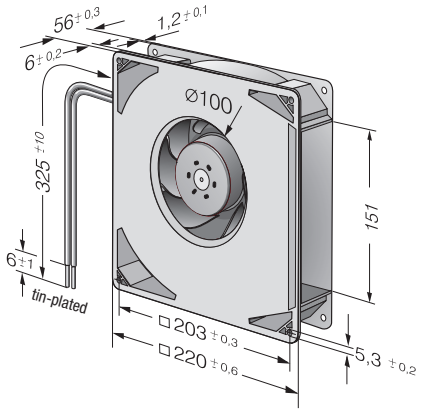




ebmpapst

max. 930 m³/h

S-Force

# DC centrifugal fans

## Series RG 190 TD 225 x 225 x 85 mm

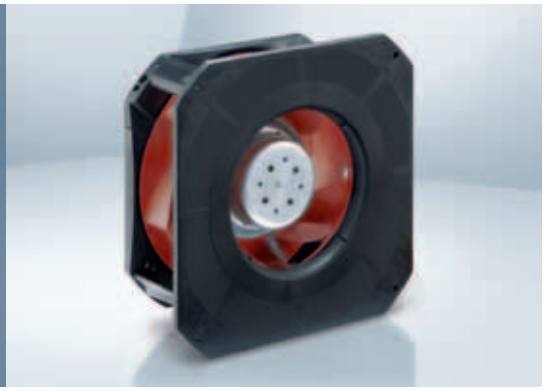

- **Material:** Scroll housing: GRP[1)] Impeller: GRP[1)]
- **Direction of air flow:** Axial: Intake, Centrifugal: Exhaust
- **Direction of rotation:** Clockwise, seen on rotor
- **Connection:** Via single wires AWG 18, 20 or AWG 22, TR 64, speed signal and control input AWG 22
- **Highlights:** 3-phase fan drive with very smooth running and high efficiency Backwards-curved RadiCal impeller
- **Mass:** 1210 g

1) Fibreglass-reinforced plastic

- **Possible special versions:** (See chapter DC fans - specials)
  - Speed signal
  - Go / No-go alarm
  - Alarm with limit speed
  - External temperature sensor
  - Internal temperature sensor
  - PWM control input
  - Analogue control input
  - Multi-option control input
  - Protection against moisture
  - Protection against salt fog
  - Type of protection: IP 54

| Nominal data | Air flow | Air flow | Nominal voltage | Voltage range | Sound power level | Sintec sleeve bearings / Ball bearings | Input power | Nominal speed | Temperature range | Service life $L_{10}$ (40 °C) ebm-papst Standard / Service life $L_{10}$ ($T_{max}$) ebm-papst Standard | Life expectancy $L_{10IPC}$ (40 °C) see page 17 | Curve |
|---|---|---|---|---|---|---|---|---|---|---|---|---|
| **Type** | **m³/h** | **CFM** | **VDC** | **VDC** | **Bel(A)** | □/■ | **Watts** | **rpm** | **°C** | **Hours** | **Hours** | |
| RG 190-39/14/2 TDMLO | 630 | 371 | **24** | 16...30 | 7,6 | ■ | 54 | 3 000 | -20...+60 | 55 000 / 35 000 | 92 500 | ① |
| RG 190-39/14/2 TDMO | 820 | 482 | **24** | 16...36 | 7,9 | ■ | 113 | 3 900 | -20...+65 | 52 500 / 30 000 | 87 500 | ② |
| RG 190-39/18/2 TDMLO* | 630 | 371 | **48** | 36...57 | 7,6 | ■ | 52 | 3 000 | -20...+65 | 55 000 / 30 000 | 92 500 | ① |
| RG 190-39/18/2 TDMO | 820 | 482 | **48** | 36...72 | 7,9 | ■ | 113 | 3 900 | -20...+65 | 52 500 / 30 000 | 87 500 | ② |
| RG 190-39/18/2 TDO | 930 | 547 | **48** | 36...72 | 8,3 | ■ | 140 | 4 400 | -20...+65 | 40 000 / 22 500 | 67 500 | ③ |

* provisional

Subject to alternations

Speed control range from 800 rpm at 7 % PWM up to nominal speed at > 90 % PWM. Standstill at 0 % PWM, standstill if control cable is interrupted.

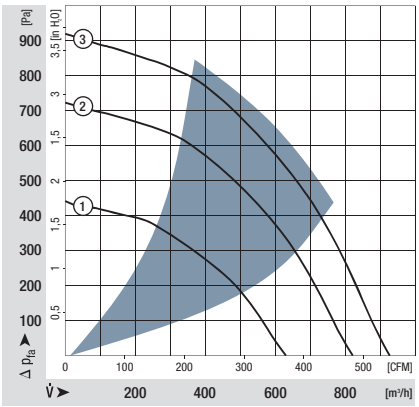


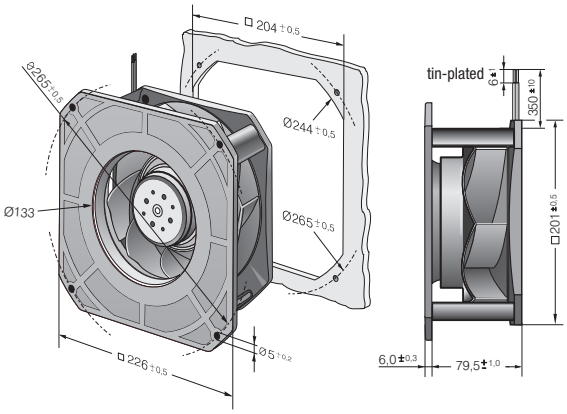

max. 1280 m³/h

S-Force

# DC centrifugal fans

## Series RG 220 TD 270 x 270 x 99 mm

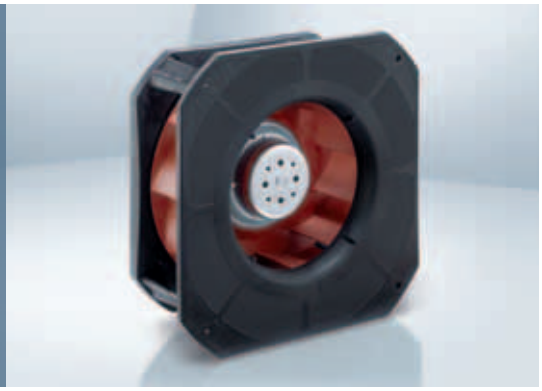

- **Material:** Scroll housing: GRP[1)]
  Impeller: GRP[1)]
- **Direction of air flow:** Axial: Intake
  Centrifugal: Exhaust
- **Direction of rotation:** Clockwise, seen on rotor
- **Connection:** Via single wires AWG 18, 20 or AWG 22, TR 64, speed signal and control input AWG 22
- **Highlights:** 3-phase fan drive with very smooth running and high efficiency
  Backwards-curved impeller
- **Mass:** 1870 g

1) Fibreglass-reinforced plastic

- **Possible special versions:**
  (See chapter DC fans - specials)
  - Speed signal
  - Go / No-go alarm
  - Alarm with limit speed
  - External temperature sensor
  - Internal temperature sensor
  - PWM control input
  - Analogue control input
  - Protection against moisture
  - Protection against salt fog
  - Type of protection: IP 54

| Nominal data | Air flow | Air flow | Nominal voltage | Voltage range | Sound power level | Sintec sleeve bearings / Ball bearings | Input power | Nominal speed | Temperature range | Service life $L_{10}$ (40 °C) ebm-papst Standard / Service life $L_{10}$ ($T_{max}$) ebm-papst Standard | Life expectancy $L_{10IPC}$ (40 °C) see page 17 | Curve |
|---|---|---|---|---|---|---|---|---|---|---|---|---|
| **Type** | **m³/h** | **CFM** | **VDC** | **VDC** | **Bel(A)** | □ / ■ | **Watts** | **rpm** | **°C** | **Hours** | **Hours** | |
| RG 220-44/14/2 TDM0* | 1090 | 641 | **24** | 16...36 | 7,7 | ■ | 82 | 3 000 | -20...+55 | 75 000 / 52 500 | 127 500 | ① |
| RG 220-44/18/2 TDM0* | 1090 | 641 | **48** | 36...72 | 7,7 | ■ | 80 | 3 000 | -20...+55 | 75 000 / 52 500 | 127 500 | ① |
| RG 220-44/18/2 TD0* | 1280 | 753 | **48** | 36...72 | 8,0 | ■ | 140 | 3 500 | -20...+55 | 55 000 / 40 000 | 92 500 | ② |

* provisional

Subject to alternations

Speed control range from 800 rpm at 7 % PWM up to nominal speed at > 90 % PWM. Standstill at 0 % PWM, standstill if control cable is interrupted.

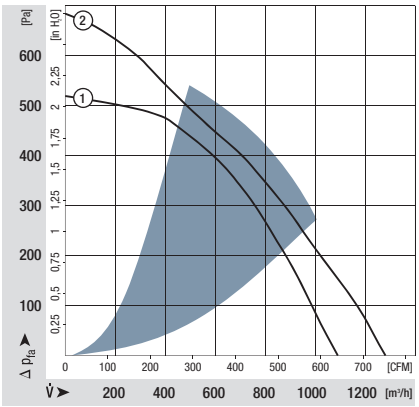


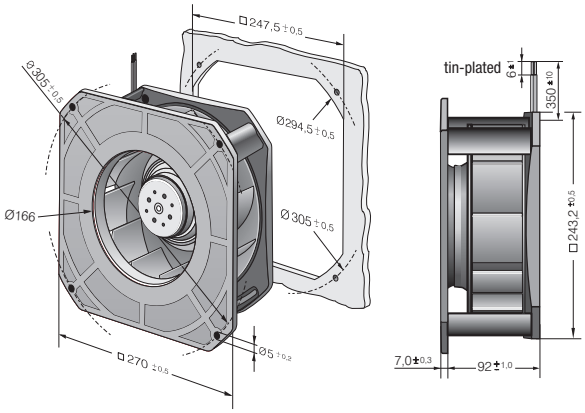




Guard grilles
p. 245

ebmpapst

max. 1450 m³/h

S-Force

# DC centrifugal fans

## Series RG 225 TD 270 x 270 x 119 mm

- **Material:** Scroll housing: GRP[1)] Impeller: GRP[1)]
- **Direction of air flow:** Axial: Intake, Centrifugal: Exhaust
- **Direction of rotation:** Clockwise, seen on rotor
- **Connection:** Via single wires AWG 18, 20 or AWG 22, TR 64, speed signal and control input AWG 22
- **Highlights:** 3-phase fan drive with very smooth running and high efficiency Backwards-curved RadiCal impeller
- **Mass:** 1750 g

1) Fibreglass-reinforced plastic

- **Possible special versions:** (See chapter DC fans - specials)
  - Speed signal
  - Go / No-go alarm
  - Alarm with limit speed
  - External temperature sensor
  - Internal temperature sensor
  - PWM control input
  - Analogue control input
  - Protection against moisture
  - Protection against salt fog
  - Type of protection: IP 54

| | Nominal data | Air flow | Air flow | Nominal voltage | Voltage range | Sound power level | Sintec sleeve bearings / Ball bearings | Input power | Nominal speed | Temperature range | Service life $L_{10}$ (40 °C) ebm-papst Standard / Service life $L_{10}$ ($T_{max}$) ebm-papst Standard | Life expectancy $L_{10IPC}$ (40 °C) see page 17 | Curve |
|---|---|---|---|---|---|---|---|---|---|---|---|---|---|
| | **Type** | **m³/h** | **CFM** | **VDC** | **VDC** | **Bel(A)** | □/■ | **Watts** | **rpm** | **°C** | **Hours** | **Hours** | |
| | RG 225-55/14/2 TDMLO | 1040 | 612 | **24** | 16...36 | 7,3 | ■ | 65 | 2 400 | -20...+55 | 72 500 / 52 500 | 122 500 | ① |
| | RG 225-55/18/2 TDMLO* | 1040 | 612 | **48** | 36...72 | 7,3 | ■ | 65 | 2 400 | -20...+55 | 72 500 / 52 500 | 122 500 | ① |
| | RG 225-55/18/2 TDMO | 1210 | 712 | **48** | 36...72 | 7,9 | ■ | 116 | 2 800 | -20...+55 | 55 000 / 40 000 | 92 500 | ② |
| NEW | RG 225-55/18/2 TDO | 1450 | 853 | **48** | 36...60 | 8,1 | ■ | 192 | 3 300 | -20...+40 | 30 000 / 30 000 | 50 000 | ③ |

* provisional

Subject to alternations

Speed control range from 800 rpm at 7 % PWM up to nominal speed at > 90 % PWM. Standstill at 0 % PWM, standstill if control cable is interrupted.
The specific service life is valid when an external capacitor is wired between the plus and minus wires.
Please note the wiring suggestion.

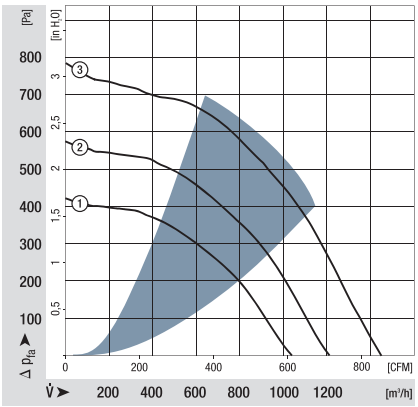


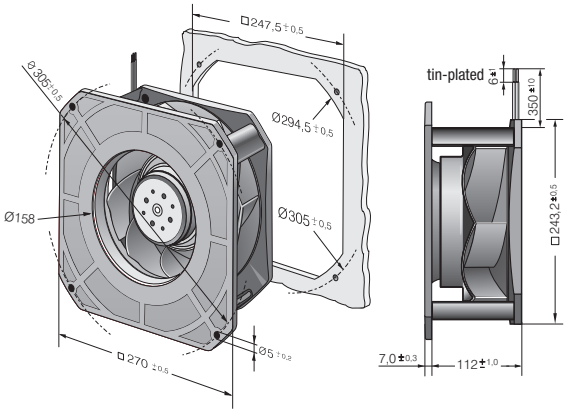

max. 220 m³/h

S-Force

# DC centrifugal fans

## Series RET 97 TD Ø 97 x 41 mm

- **Material:** Impeller: Galvanised sheet steel
- **Direction of air flow:** Axial: Intake, Centrifugal: Exhaust
- **Direction of rotation:** Clockwise, seen on rotor
- **Connection:** Via single wires AWG 18, 20 or AWG 22, TR 64, speed signal and control input AWG 22
- **Highlights:** 3-phase fan drive with very smooth running and high efficiency
  Forwards-curved impeller
  Fan requires a scroll housing
- **Mass:** 430 g

- **Possible special versions:**
  (See chapter DC fans - specials)
  - Speed signal
  - Go / No-go alarm
  - Alarm with limit speed
  - External temperature sensor
  - Internal temperature sensor
  - PWM control input
  - Analogue control input
  - Protection against moisture

| Nominal data | Air flow | Air flow | Nominal voltage | Voltage range | Sound power level | Sintec sleeve bearings / Ball bearings | Input power | Nominal speed | Temperature range | Service life $L_{10}$ (40 °C) ebm-papst Standard / Service life $L_{10}$ ($T_{max}$) ebm-papst Standard | Life expectancy $L_{10IPC}$ (40 °C) see page 17 | Curve |
|---|---|---|---|---|---|---|---|---|---|---|---|---|
| **Type** | **m³/h** | **CFM** | **VDC** | **VDC** | **Bel(A)** | □ / ■ | **Watts** | **rpm** | **°C** | **Hours** | **Hours** | |
| RET 97-25/14/2 TDP | 220 | 129 | **24** | 16...36 | 8,1 | ■ | 77 | 6 000 | -20...+60 | 80 000 / 50 000 | 135 000 | ① |
| RET 97-25/18/2 TDP | 220 | 129 | **48** | 36...60 | 8,1 | ■ | 76 | 6 000 | -20...+60 | 80 000 / 50 000 | 135 000 | ① |

Subject to alternations

Speed control range from 800 rpm at 7 % PWM up to nominal speed at > 90 % PWM. Standstill at 0 % PWM, standstill if control cable is interrupted.
The specific service life is valid when an external capacitor is wired between the plus and minus wires.
Please note the wiring suggestion.
All nominal data were measured in the scroll housing.

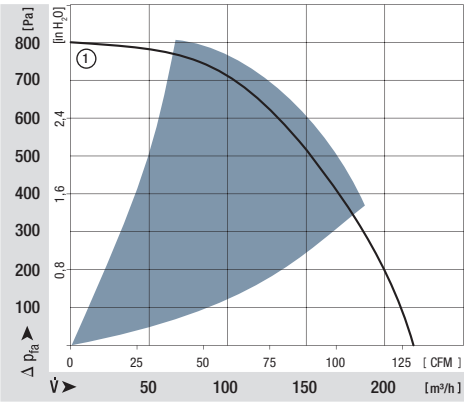


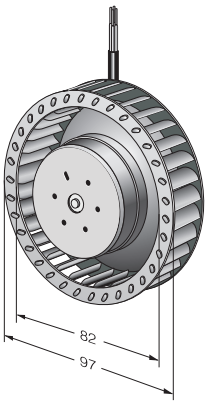


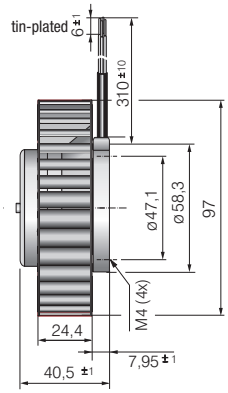




Inlet nozzles
from p. 248

ebmpapst

max. 104 m³/h

# DC centrifugal fans

## Series REF 100 Ø 104 x 25 mm

- **Material:** Impeller: GRP[1)]
- **Direction of air flow:** Axial: Intake
  Centrifugal: Exhaust
- **Direction of rotation:** Clockwise, seen on rotor
- **Connection:** Via single wires AWG 22, TR 64
- **Highlights:** Backwards-curved impeller
- **Mass:** 160 g

- **Possible special versions:**
  (See chapter DC fans - specials)
  - Speed signal
  - Go / No-go alarm
  - Alarm with limit speed
  - External temperature sensor
  - Internal temperature sensor
  - PWM control input
  - Analogue control input
  - Protection against moisture
  - Type of protection: IP 54

1) Fibreglass-reinforced plastic

| Nominal data | Air flow | Air flow | Nominal voltage | Voltage range | Sound power level | Sintec sleeve bearings / Ball bearings | Input power | Nominal speed | Temperature range | Service life $L_{10}$ (40 °C) ebm-papst Standard / Service life $L_{10}$ ($T_{max}$) ebm-papst Standard | Life expectancy $L_{10IPC}$ (40 °C) see page 17 | Curve |
|---|---|---|---|---|---|---|---|---|---|---|---|---|
| **Type** | **m³/h** | **CFM** | **VDC** | **VDC** | **Bel(A)** | □/■ | **Watts** | **rpm** | **°C** | **Hours** | **Hours** | |
| REF 100-11/12 | 86 | 50,6 | **12** | 8...15 | 6,3 | ■ | 7,5 | 5 400 | -20...+75 | 80 000 / 30 000 | 135 000 | ① |
| REF 100-11/14 | 86 | 50,6 | **24** | 16...30 | 6,3 | ■ | 7,5 | 5 400 | -20...+75 | 80 000 / 30 000 | 135 000 | ① |
| REF 100-11/18 | 86 | 50,6 | **48** | 36...60 | 6,3 | ■ | 8,2 | 5 400 | -20...+75 | 80 000 / 30 000 | 135 000 | ① |
| REF 100-11/18 H | 104 | 61,2 | **48** | 36...56 | 6,9 | ■ | 14,8 | 6 700 | -20...+70 | 67 500 / 32 500 | 115 000 | ② |

Subject to alternations

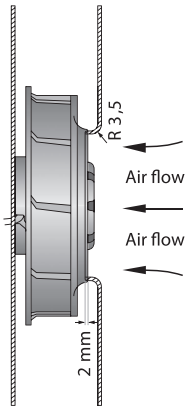


The air flow and noise level of the centrifugal fans without external housing depend on their individual installation conditions. The stated air flow and noise level were recorded under the following measurement parameters:
Centrifugal fan mounted on a foundation plate 127 x 127 mm.
Cover plate 127 x 127 mm, with an air inlet opening Ø 70 mm, arranged concentrically to the impeller.

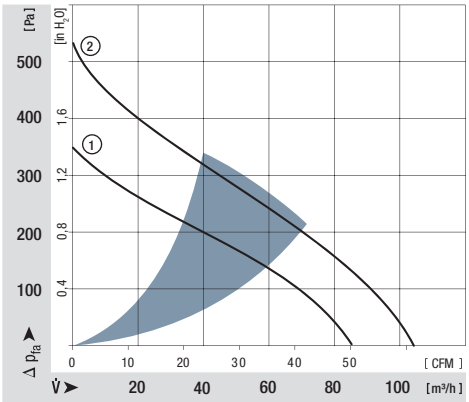


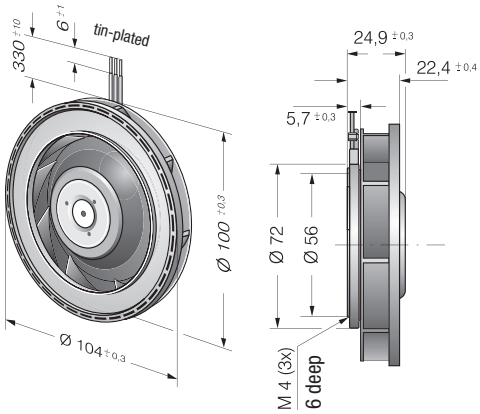

max. 190 m³/h

# DC centrifugal fans

## Series RER 101 Ø 101 x 52 mm

- **Material:** Impeller: GRP[1)]
- **Direction of air flow:** Axial: Intake
  Centrifugal: Exhaust
- **Direction of rotation:** Clockwise, seen on rotor
- **Connection:** Via single wires AWG 22, TR 64
- **Highlights:** Backwards-curved impeller
- **Mass:** 305 g

- **Possible special versions:**
  (See chapter DC fans - specials)
  - Speed signal
  - Go / No-go alarm
  - Alarm with limit speed
  - External temperature sensor
  - Internal temperature sensor
  - PWM control input
  - Analogue control input
  - Protection against moisture

1) Fibreglass-reinforced plastic

| Nominal data | Air flow | Air flow | Nominal voltage | Voltage range | Sound power level | Sintec sleeve bearings / Ball bearings | Input power | Nominal speed | Temperature range | Service life $L_{10}$ (40 °C) ebm-papst Standard / Service life $L_{10}$ ($T_{max}$) ebm-papst Standard | Life expectancy $L_{10IPC}$ (40 °C) see page 17 | Curve |
|---|---|---|---|---|---|---|---|---|---|---|---|---|
| **Type** | **m³/h** | **CFM** | **VDC** | **VDC** | **Bel(A)** | □ / ■ | **Watts** | **rpm** | **°C** | **Hours** | **Hours** | |
| RER 101-36/12 NH | 162 | 95 | **12** | 9...13,6 | 6,9 | ■ | 13,0 | 5 000 | -20...+70 | 65 000 / 32 500 | 110 000 | ② |
| RER 101-36/12 NHH | 190 | 112 | **12** | 9...13,6 | 7,2 | ■ | 20,5 | 6 000 | -20...+70 | 60 000 / 30 000 | 102 500 | ① |
| RER 101-36/14 NHH | 190 | 112 | **24** | 18...27,2 | 7,2 | ■ | 22,5 | 6 050 | -20...+70 | 60 000 / 30 000 | 102 500 | ① |
| RER 101-36/18 NHH | 190 | 112 | **48** | 36...60 | 7,2 | ■ | 19,4 | 5 850 | -20...+70 | 60 000 / 30 000 | 102 500 | ① |

Subject to alternations

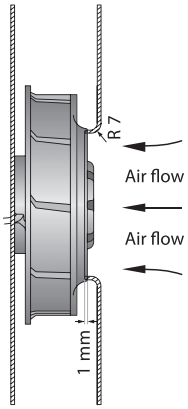


The air flow and noise level of the centrifugal fans without external housing depend on their individual installation conditions. The stated air flow and noise level were recorded under the following measurement parameters:
Centrifugal fan mounted on a foundation plate 148 x 148 mm. Cover plate 148 x 148 mm, with an air inlet opening Ø 66 mm, arranged concentrically to the impeller.

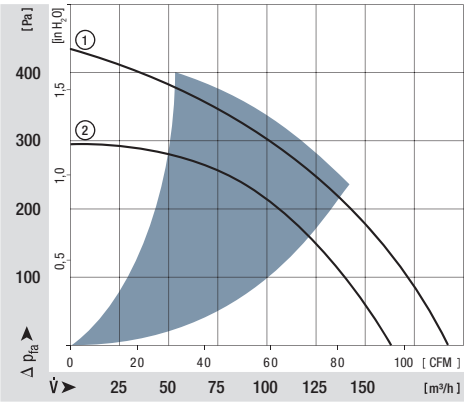


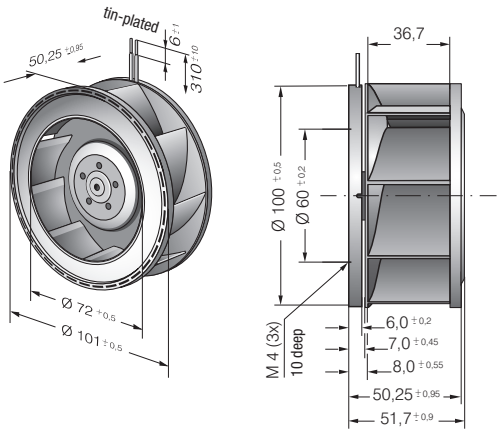




Inlet nozzles
from p. 248

ebmpapst

max. 390 m³/h

S-Force

# DC centrifugal fans

## Series RER 120 TD Ø 120 x 54 mm

- **Material:** Impeller: GRP[1)]
- **Direction of air flow:** Axial: Intake
  Centrifugal: Exhaust
- **Direction of rotation:** Clockwise, seen on rotor
- **Connection:** Via single wires AWG 18, 20 or AWG 22, TR 64, speed signal and control input AWG 22
- **Highlights:** 3-phase fan drive with very smooth running and high efficiency
  Backwards-curved impeller
- **Mass:** 430 g

1) Fibreglass-reinforced plastic

- **Possible special versions:**
  (See chapter DC fans - specials)
  - Speed signal
  - Go / No-go alarm
  - Alarm with limit speed
  - External temperature sensor
  - Internal temperature sensor
  - PWM control input
  - Analogue control input
  - Protection against moisture

| Nominal data | Air flow | Air flow | Nominal voltage | Voltage range | Sound power level | Sintec sleeve bearings / Ball bearings | Input power | Nominal speed | Temperature range | Service life $L_{10}$ (40 °C) ebm-papst Standard / Service life $L_{10}$ ($T_{max}$) ebm-papst Standard | Life expectancy $L_{10IPC}$ (40 °C) see page 17 | Curve |
|---|---|---|---|---|---|---|---|---|---|---|---|---|
| **Type** | **m³/h** | **CFM** | **VDC** | **VDC** | **Bel(A)** | □/■ | **Watts** | **rpm** | **°C** | **Hours** | **Hours** | |
| RER 120-26/14/2 TDMP* | 320 | 188 | **24** | 16...32 | tbd | ■ | 51 | 5 200 | -20...+60 | 60 000 / 37 500 | 102 500 | ① |
| RER 120-26/14/2 TDP | 377 | 222 | **24** | 16...32 | 8,2 | ■ | 78 | 6 100 | -20...+60 | 55 000 / 35 000 | 92 500 | ② |
| RER 120-26/18/2 TDMP* | 320 | 188 | **48** | 36...60 | tbd | ■ | 51 | 5 200 | -20...+60 | 57 500 / 35 000 | 97 500 | ① |
| RER 120-26/18/2 TDP | 390 | 230 | **48** | 36...60 | 8,3 | ■ | 92 | 6 300 | -20...+60 | 50 000 / 30 000 | 85 000 | ③ |

* provisional

Subject to alternations

Speed control range from 800 rpm at 7 % PWM up to nominal speed at > 90 % PWM. Standstill at 0 % PWM, standstill if control cable is interrupted.
The specific service life is valid when an external capacitor is wired between the plus and minus wires.
Please note the wiring suggestion.

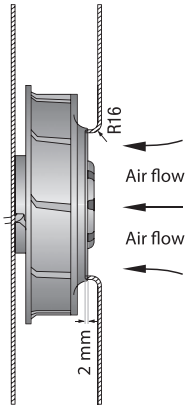


The air flow and noise level of the centrifugal fans without external housing depend on their individual installation conditions. The stated air flow and noise level were recorded under the following measurement parameters:
Centrifugal fan mounted on a foundation plate 140 x 140 mm.
Cover plate 140 x 140 mm, with an air inlet opening Ø 94,4 mm, arranged concentrically to the fan impeller.

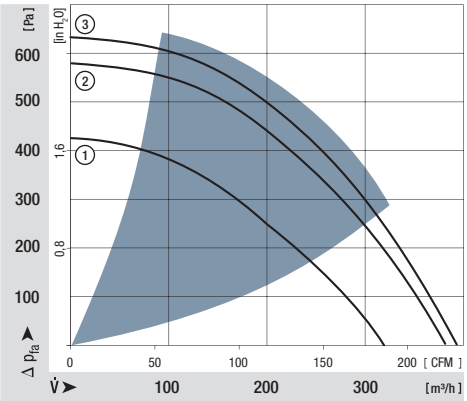


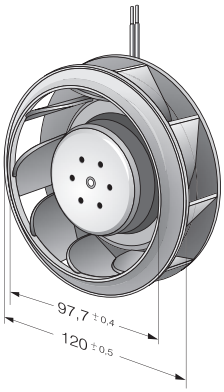


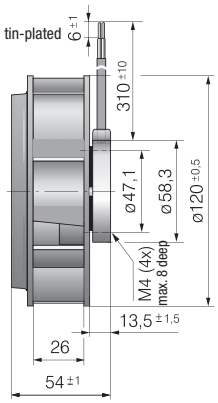

max. 250 m³/h

# DC centrifugal fans

## Ø 120 mm

- **Material:** Impeller: PA 6.6 plastic, fibreglass-reinforced
  Rotor: Galvanised
- **Number of blades:** 9
- **Direction of rotation:** Clockwise, seen on rotor
- **Type of protection:** IP 20
- **Insulation class:** "B"
- **Mounting position:** Any
- **Condensate discharges:** None
- **Operation mode:** Continuous operation (S1)
- **Bearings:** Maintenance-free ball bearings

| Nominal data | | Curve | Nominal voltage | Voltage range | Air flow | Speed / rpm | Input power | Current draw | Sound power level | Perm. amb. temp. | Technical features and electrical connections |
|---|---|---|---|---|---|---|---|---|---|---|---|
| **Type** | **Motor** | | **VDC** | **VDC** | **m³/h** | **rpm** | **W** | **A** | **dB(A)** | **°C** | |
| **R1G 120** | M1G 045-BE | A | 24 | 16-28 | 250 | 4060 | 26 | 1,20 | 62 | -25..+60 | p. 255 / G) |
| **R1G 120** | M1G 045-BE | A | 48 | 36-57 | 250 | 4060 | 26 | 0,60 | 62 | -25..+60 | p. 255 / G) |

Subject to alternations

**Curve:**

$U_N$ = nominal voltage (24 V /48 V)

$U_R$ = overvoltage (28 V / 57 V)

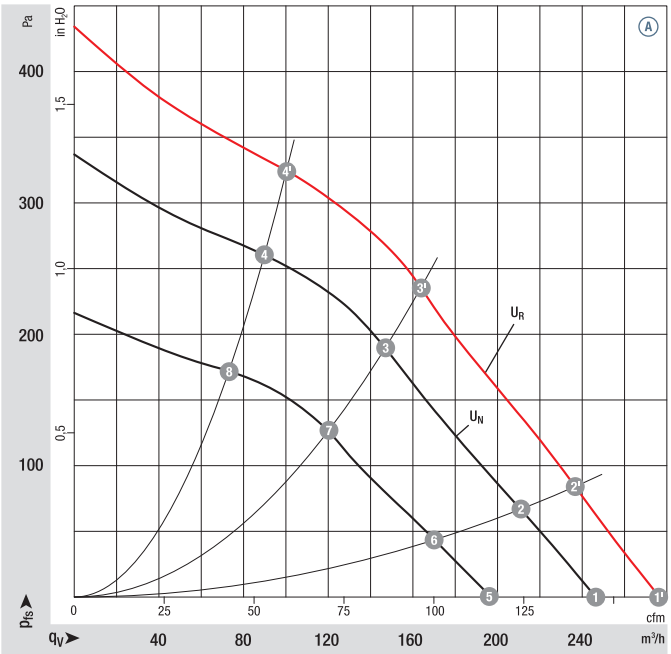


| | n rpm | $P_{ed}$ W | $Lp_A$ dB(A) | $\eta_{tL}$ % |
|---|---|---|---|---|
| A 1' | 4520 | 36 | 65 | — |
| A 2' | 4500 | 36 | 64 | 27 |
| A 3' | 4540 | 36 | 61 | 45 |
| A 4' | 4750 | 32 | 64 | 39 |
| A 1 | 4060 | 26 | 62 | — |
| A 2 | 4000 | 26 | 61 | 27 |
| A 3 | 4050 | 26 | 58 | 45 |
| A 4 | 4200 | 23 | 61 | 39 |
| A 5 | 3270 | 14 | 56 | — |
| A 6 | 3250 | 14 | 55 | 27 |
| A 7 | 3280 | 14 | 53 | 45 |
| A 8 | 3400 | 13 | 56 | 39 |

Air performance measured as per: ISO 5801, Installation category A, with ebm-papst inlet nozzle without protection against accidental contact. Suction-side noise levels: LWA as per ISO 13347, LpA measured at 1 m distance to fan axis. The acoustic values given are only valid under the measurment conditions listed and may vary depending on the installation situation. With any deviation to the standard setup, the specific values have to be checked and reviewed once installed or fitted!
For detailed information see http://www.ebmpapst.com/general conditions



ebmpapst

- **Technical features:** See electrical connections p. 255
- **Cable exit:** Axial
- **Protection class:** I
- **Product conforming to standards:** EN 60950-1
- **Approvals:** Ⓐ (48 VDC) CCC

Mass centrifugal fans

| Centrifugal fans | kg | Inlet nozzle (long) |
|---|---|---|
| **R1G 120-AD13 -02** | 0,5 | 96120-2-4013 |
| **R1G 120-AD11 -02** | 0,5 | 96120-2-4013 |

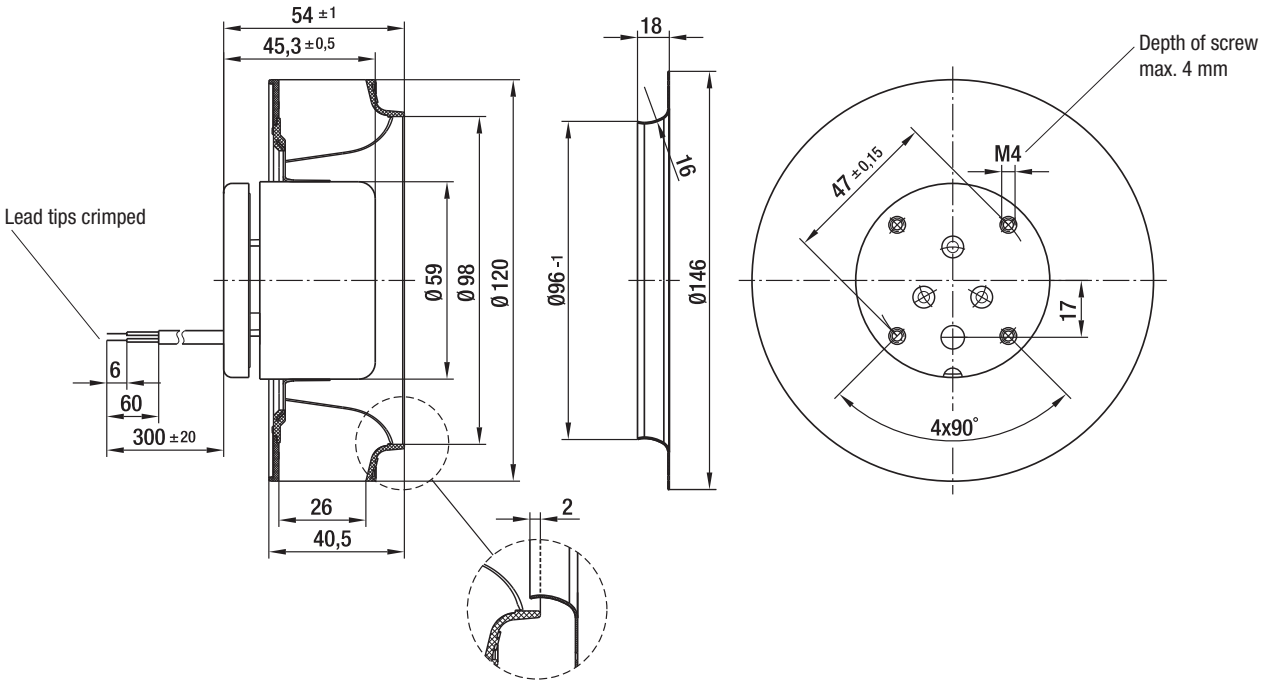

max. 166 m³/h

# DC centrifugal fans

## Series RER 125 N Ø 138 x 35 mm

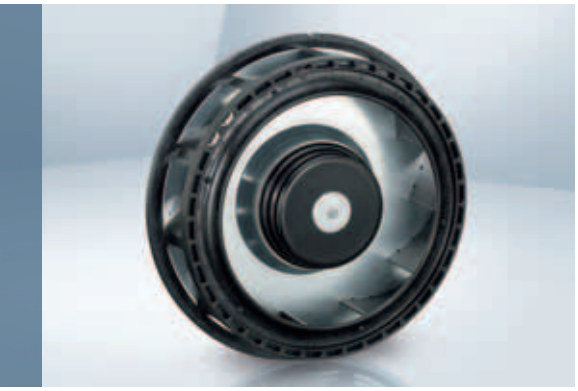

- **Material:** Impeller: GRP[1)]
- **Direction of air flow:** Axial: Intake
  Centrifugal: Exhaust
- **Direction of rotation:** Clockwise, seen on rotor
- **Connection:** Via single wires AWG 22, TR 64
- **Highlights:** Backwards-curved impeller
- **Mass:** 320 g

- **Possible special versions:**
  (See chapter DC fans - specials)
  - Speed signal
  - Go / No-go alarm
  - Alarm with limit speed
  - External temperature sensor
  - Internal temperature sensor
  - PWM control input
  - Analogue control input
  - Protection against moisture
  - Protection against salt fog
  - Type of protection: IP 54 / IP 68

1) Fibreglass-reinforced plastic

| Nominal data | Air flow | Air flow | Nominal voltage | Voltage range | Sound power level | Sintec sleeve bearings / Ball bearings | Input power | Nominal speed | Temperature range | Service life $L_{10}$ (40 °C) ebm-papst Standard / Service life $L_{10}$ ($T_{max}$) ebm-papst Standard | Life expectancy $L_{10IPC}$ (40 °C) see page 17 | Curve |
|---|---|---|---|---|---|---|---|---|---|---|---|---|
| **Type** | **m³/h** | **CFM** | **VDC** | **VDC** | **Bel(A)** | □ / ■ | **Watts** | **rpm** | **°C** | **Hours** | **Hours** | |
| RER 125-19/12 N | 110 | 64,7 | **12** | 7...15 | 5,7 | ■ | 4,6 | 2 650 | -30...+75 | 62 500 / 27 500 | 105 000 | ① |
| RER 125-19/14 N | 110 | 64,7 | **24** | 12...28 | 5,7 | ■ | 4,3 | 2 650 | -30...+75 | 62 500 / 27 500 | 105 000 | ① |
| RER 125-19/14 NH | 166 | 97,7 | **24** | 12...28 | 7,0 | ■ | 13,0 | 4 000 | -20...+70 | 55 000 / 27 500 | 92 500 | ② |
| RER 125-19/18 N | 110 | 64,7 | **48** | 36...56 | 5,7 | ■ | 4,2 | 2 650 | -30...+75 | 62 500 / 27 500 | 105 000 | ① |

Subject to alternations

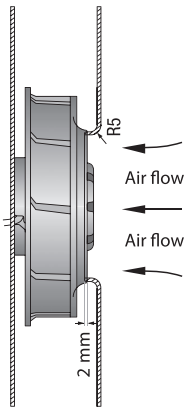


The air flow and noise level of the centrifugal fans without external housing depend on their individual installation conditions. The stated air flow and noise level were recorded under the following measurement parameters:
Centrifugal fan mounted on a foundation plate 120 x 120 mm.
Cover plate 120 x 120 mm, with an air inlet opening Ø 86 mm, arranged concentrically to the impeller.

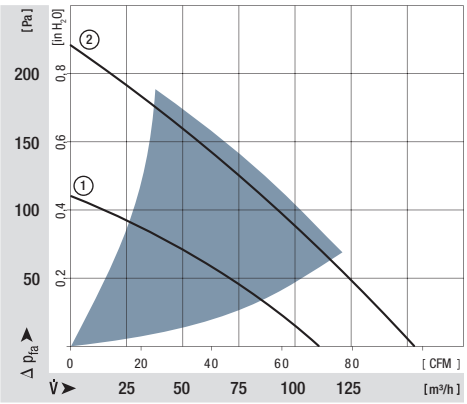


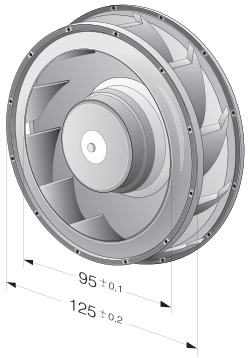


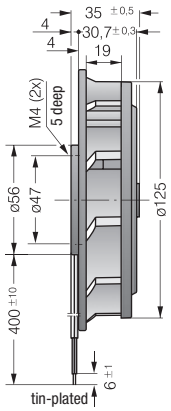




ebmpapst

max. 565 m³/h

S-Force

# DC centrifugal fans

## Series RER 133 TD Ø 133 x 91 mm

- **Material:** Impeller: GRP[1)]
- **Direction of air flow:** Axial: Intake
  Centrifugal: Exhaust
- **Direction of rotation:** Clockwise, seen on rotor
- **Connection:** Via single wires AWG 18, 20 or AWG 22, TR 64, speed signal and control input AWG 22
- **Highlights:** 3-phase fan drive with very smooth running and high efficiency
  Backwards-curved impeller
- **Mass:** 890 g

1) Fibreglass-reinforced plastic

- **Possible special versions:**
  (See chapter DC fans - specials)
  - Speed signal
  - Go / No-go alarm
  - Alarm with limit speed
  - External temperature sensor
  - Internal temperature sensor
  - PWM control input
  - Analogue control input
  - Multi-option control input
  - Protection against moisture
  - Protection against salt fog
  - Type of protection: IP 54

| Nominal data | Air flow | Air flow | Nominal voltage | Voltage range | Sound power level | Sintec sleeve bearings / Ball bearings | Input power | Nominal speed | Temperature range | Service life $L_{10}$ (40 °C) ebm-papst Standard / Service life $L_{10}$ ($T_{max}$) ebm-papst Standard | Life expectancy $L_{10IPC}$ (40 °C) see page 17 | Curve |
|---|---|---|---|---|---|---|---|---|---|---|---|---|
| **Type** | **m³/h** | **CFM** | **VDC** | **VDC** | **Bel(A)** | □/■ | **Watts** | **rpm** | **°C** | **Hours** | **Hours** | |
| RER 133-41/14/2 TDMP | 460 | 271 | **24** | 16...30 | tbd | ■ | 58 | 5 000 | -20...+65 | 72 500 / 40 000 | 122 500 | ① |
| RER 133-41/14/2 TDP* | 565 | 332 | **24** | 16...36 | tbd | ■ | 90 | 6 000 | -20...+65 | 70 000 / 37 500 | 117 500 | ② |
| RER 133-41/18/2 TDMP* | 460 | 271 | **48** | 36...57 | tbd | ■ | 50 | 5 000 | -20...+65 | 72 500 / 40 000 | 122 500 | ① |
| RER 133-41/18/2 TDP | 565 | 332 | **48** | 36...72 | 8,2 | ■ | 87 | 6 000 | -20...+65 | 70 000 / 37 500 | 117 500 | ② |

* provisional

Subject to alternations

Speed control range from 800 rpm at 7 % PWM up to nominal speed at > 90 % PWM. Standstill at 0 % PWM, standstill if control cable is interrupted.

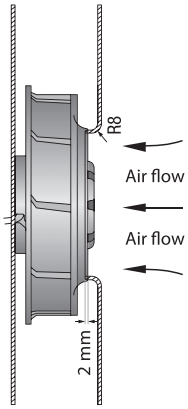


The air flow and noise level of the centrifugal fans without external housing depend on their individual installation conditions. The stated air flow and noise level were recorded under the following measurement parameters:
Centrifugal fan mounted on a foundation plate 140 x 140 mm.
Cover plate 140 x 140 mm, with an air inlet opening Ø 87 mm, arranged concentrically to the impeller.

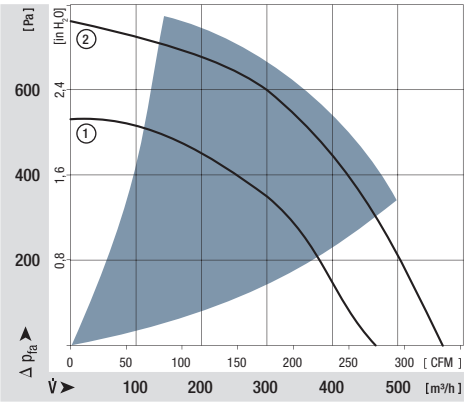


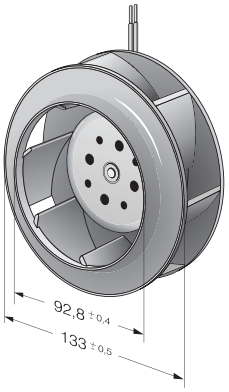


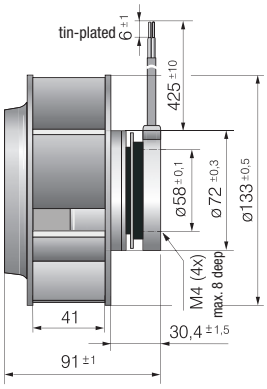

max. 255 m³/h

# DC centrifugal fans

## Series RER 160 N Ø 165 x 51 mm

- **Material:** Impeller: GRP[1)]
- **Direction of air flow:** Axial: Intake
  Centrifugal: Exhaust
- **Direction of rotation:** Counter-clockwise, seen on rotor
- **Connection:** Via single wires AWG 22, TR 64
- **Highlights:** Backwards-curved impeller
- **Mass:** 590 g

- **Possible special versions:**
  (See chapter DC fans - specials)
  - Speed signal
  - Go / No-go alarm
  - Alarm with limit speed
  - External temperature sensor
  - Internal temperature sensor
  - PWM control input
  - Analogue control input
  - Protection against moisture
  - Protection against salt fog
  - Type of protection: IP 54

1) Fibreglass-reinforced plastic

| Nominal data | Air flow | Air flow | Nominal voltage | Voltage range | Sound power level | Sintec sleeve bearings / Ball bearings | Input power | Nominal speed | Temperature range | Service life $L_{10}$ (40 °C) ebm-papst Standard / Service life $L_{10}$ ($T_{max}$) ebm-papst Standard | Life expectancy $L_{10IPC}$ (40 °C) see page 17 | Curve |
|---|---|---|---|---|---|---|---|---|---|---|---|---|
| **Type** | **m³/h** | **CFM** | **VDC** | **VDC** | **Bel(A)** | □ / ■ | **Watts** | **rpm** | **°C** | **Hours** | **Hours** | |
| RER 160-28/12 N | 255 | 150 | **12** | 7...14 | 6,4 | ■ | 19,0 | 3 000 | -20...+70 | 75 000 / 37 500 | 127 500 | ① |
| RER 160-28/14 N | 255 | 150 | **24** | 12...28 | 6,4 | ■ | 19,0 | 3 000 | -20...+70 | 75 000 / 37 500 | 127 500 | ① |
| RER 160-28/18 N | 255 | 150 | **48** | 28...60 | 6,4 | ■ | 19,0 | 3 000 | -20...+70 | 75 000 / 37 500 | 127 500 | ① |

Subject to alternations

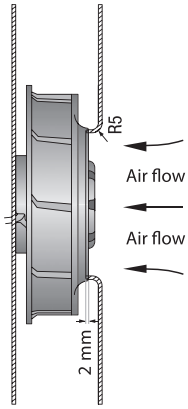


The air flow and noise level of the centrifugal fans without external housing depend on their individual installation conditions. The stated air flow and noise level were recorded under the following measurement parameters:
Centrifugal fan mounted on a foundation plate 260 x 260 mm.
Cover plate 260 x 260 mm, with an air inlet opening Ø 100 mm, arranged concentrically to the impeller.

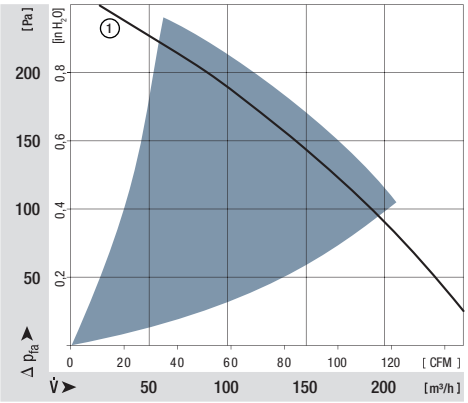


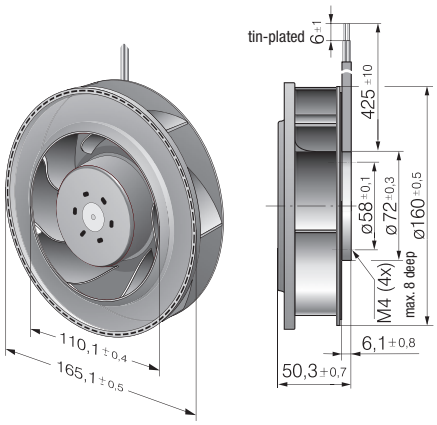




Inlet nozzles
from p. 248

ebmpapst

max. 370 m³/h

S-Force

# DC centrifugal fans

## Series RER 160 NTD Ø 165 x 51 mm

- **Material:** Impeller: GRP[1)]
- **Direction of air flow:** Axial: Intake
  Centrifugal: Exhaust
- **Direction of rotation:** Clockwise, seen on rotor
- **Connection:** Via single wires AWG 22, TR 64
- **Highlights:** 3-phase fan drive with very smooth running and high efficiency
  Backwards-curved impeller
- **Mass:** 590 g

- **Possible special versions:**
  (See chapter DC fans - specials)
  - Speed signal
  - Go / No-go alarm
  - Alarm with limit speed
  - External temperature sensor
  - Internal temperature sensor
  - PWM control input
  - Analogue control input
  - Protection against moisture
  - Type of protection: IP 54

1) Fibreglass-reinforced plastic

| | Nominal data | Air flow | Air flow | Nominal voltage | Voltage range | Sound power level | Sintec sleeve bearings / Ball bearings | Input power | Nominal speed | Temperature range | Service life $L_{10}$ (40 °C) ebm-papst Standard / Service life $L_{10}$ ($T_{max}$) ebm-papst Standard* | Life expectancy $L_{10IPC}$ (40 °C) see page 17 | Curve |
|---|---|---|---|---|---|---|---|---|---|---|---|---|---|
| | Type | m³/h | CFM | VDC | VDC | Bel(A) | □/■ | Watts | rpm | °C | Hours | Hours | |
| | RER 160-28/14 N/2 TDA | 370 | 217 | **24** | 16...28 | 7,4 | ■ | 51 | 4 200 | -20...+60 | 55 000 / 35 000 | 92 500 | ② |
| | RER 160-28/18 N/2 TDHHP* | 305 | 298 | **48** | 36...60 | 8,5 | ■ | 142 | 6 000 | -20...+65 | 40 000 / 22 500 | 67 500 | ③ |
| min. | RER 160-28/18 NTD... | 66 | 39 | **48** | 38...57 | — | ■ | 2,0 | 800 | -20...+70 | 55 000 / 27 500 | 92 500 | ① |
| max. | | 354 | 98 | | | 7,4 | | 43,0 | 4 200 | | | | ② |

Subject to alternations

Model RER 160-28/18 NTD... is available in customer-specific, custom-developed variant only.
The data specified here are technically feasible benchmark values. The fans can be specially adapted to your application with signal outputs and control inputs.
* The specific service life is valid when an external capacitor is wired between the plus and minus wires.
Please note the wiring suggestion.

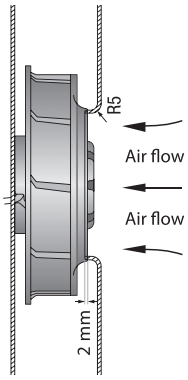


The air flow and noise level of the centrifugal fans without external housing depend on their individual installation conditions. The stated air flow and noise level were recorded under the following measurement parameters:
Centrifugal fan mounted on a foundation plate 260 x 260 mm.
Cover plate 260 x 260 mm, with an air inlet opening Ø 100 mm, arranged concentrically to the impeller.

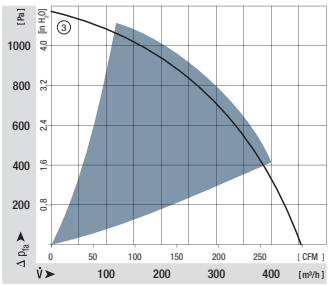


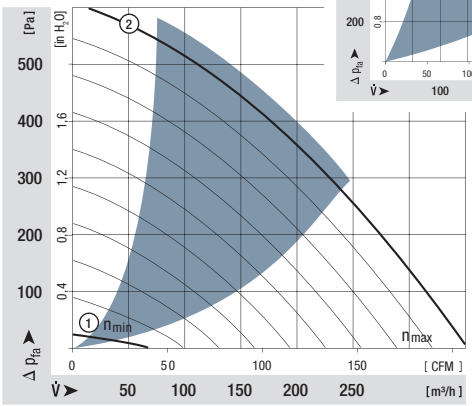


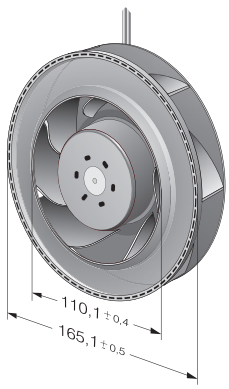


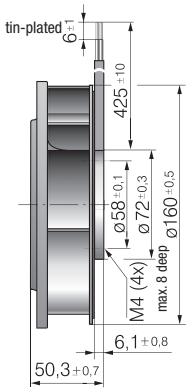

max. 800 m³/h

S-Force

# DC centrifugal fans

## Series REF 175 TD Ø 175 x 55 mm

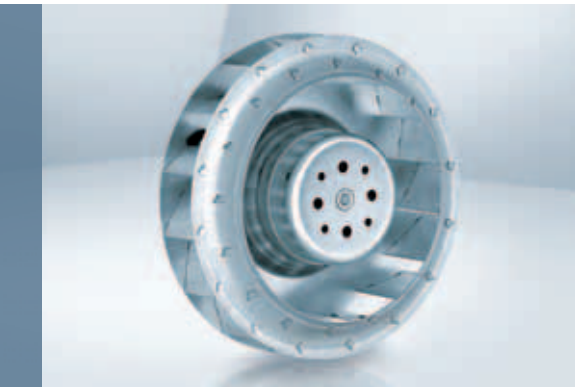

- **Material:** Impeller: Galvanised sheet steel
- **Direction of air flow:** Axial: Intake, Centrifugal: Exhaust
- **Direction of rotation:** Clockwise, seen on rotor
- **Connection:** Via single wires AWG 18, 20 or AWG 22, TR 64, speed signal and control input AWG 22
- **Highlights:** 3-phase fan drive with very smooth running and high efficiency
  Backwards-curved impeller
- **Mass:** 930 g

1) Fibreglass-reinforced plastic

- **Possible special versions:**
  (See chapter DC fans - specials)
  - Speed signal
  - Go / No-go alarm
  - Alarm with limit speed
  - External temperature sensor
  - Internal temperature sensor
  - PWM control input
  - Analogue control input
  - Multi-option control input
  - Protection against moisture
  - Type of protection: IP 54

| Nominal data | Air flow | Air flow | Nominal voltage | Voltage range | Sound power level | Sintec sleeve bearings / Ball bearings | Input power | Nominal speed | Temperature range | Service life $L_{10}$ (40 °C) ebm-papst Standard / Service life $L_{10}$ ($T_{max}$) ebm-papst Standard | Life expectancy $L_{10IPC}$ (40 °C) see page 17 | Curve |
|---|---|---|---|---|---|---|---|---|---|---|---|---|
| Type | m³/h | CFM | VDC | VDC | Bel(A) | □/■ | Watts | rpm | °C | Hours | Hours | |
| REF 175-30/18/2 TDP | 800 | 470 | **48** | 36 ... 72 | 8,3 | ■ | 144 | 4 400 | -20...+60 | 65 000 / 37 500 | 110 000 | ① |
| Subject to alternations | Speed control range from 800 rpm at 7 % PWM up to nominal speed at > 90 % PWM. Standstill at 0 % PWM, standstill if control cable is interrupted. | | | | | | | | | | | |

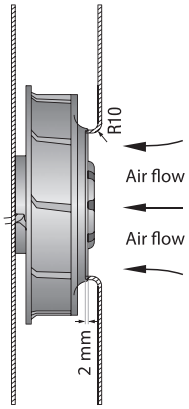


The air flow and noise level of the centrifugal fans without external housing depend on their individual installation conditions. The stated air flow and noise level were recorded under the following measurement parameters:
Centrifugal fan mounted on a foundation plate 180 x 180 mm.
Cover plate 180 x 180 mm, with an air inlet opening Ø 125,5 mm, arranged concentrically to the impeller.

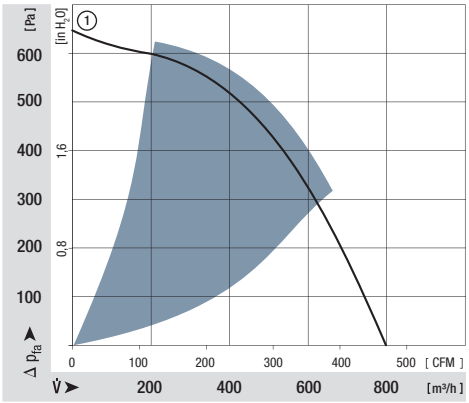


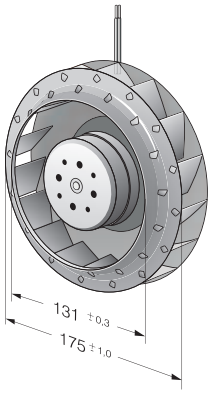


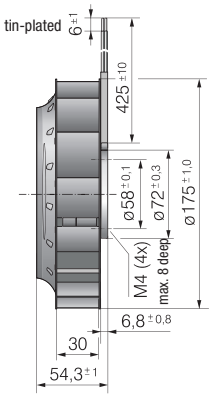




Inlet nozzles
from p. 248

ebmpapst

max. 980 m³/h

S-Force

# DC centrifugal fans

## Series RER 175 TD Ø 175 x 69 mm

- **Material:** Impeller: GRP[1)]
- **Direction of air flow:** Axial: Intake
  Centrifugal: Exhaust
- **Direction of rotation:** Clockwise, seen on rotor
- **Connection:** Via single wires AWG 18, 20 or AWG 22, TR 64, speed signal and control input AWG 22
- **Highlights:** 3-phase fan drive with very smooth running and high efficiency
  Backwards-curved impeller
- **Mass:** 775 g

1) Fibreglass-reinforced plastic

- **Possible special versions:**
  (See chapter DC fans - specials)
  - Speed signal
  - Go / No-go alarm
  - Alarm with limit speed
  - External temperature sensor
  - Internal temperature sensor
  - PWM control input
  - Analogue control input
  - Multi-option control input
  - Protection against moisture
  - Protection against salt fog
  - Type of protection: IP 54

| Nominal data | Air flow | Air flow | Nominal voltage | Voltage range | Sound power level | Sintec sleeve bearings / Ball bearings | Input power | Nominal speed | Temperature range | Service life $L_{10}$ (40 °C) ebm-papst Standard / Service life $L_{10}$ ($T_{max}$) ebm-papst Standard | Life expectancy $L_{10IPC}$ (40 °C) see page 17 | Curve |
|---|---|---|---|---|---|---|---|---|---|---|---|---|
| **Type** | **m³/h** | **CFM** | **VDC** | **VDC** | **Bel(A)** | □/■ | **Watts** | **rpm** | **°C** | **Hours** | **Hours** | |
| RER 175-42/14/2 TDMLP | 600 | 353 | **24** | 16...30 | 7,3 | ■ | 48 | 3 400 | -20...+65 | 72 500 / 40 000 | 122 500 | ① |
| RER 175-42/14/2 TDMP | 865 | 509 | **24** | 16...36 | 8,2 | ■ | 110 | 4 800 | -20...+65 | 70 000 / 40 000 | 117 500 | ② |
| RER 175-42/18/2 TDMLP | 600 | 353 | **48** | 36...57 | 7,3 | ■ | 46 | 3 400 | -20...+65 | 72 500 / 40 000 | 122 500 | ① |
| RER 175-42/18/2 TDMP* | 865 | 509 | **48** | 36...72 | 8,2 | ■ | 110 | 4 800 | -20...+65 | 70 000 / 40 000 | 117 500 | ② |
| RER 175-42/18/2 TDP | 980 | 577 | **48** | 36...72 | 8,5 | ■ | 166 | 5 400 | -20...+65 | 60 000 / 32 500 | 102 500 | ③ |

* vorläufig

Subject to alternations

Speed control range from 800 rpm at 7 % PWM up to nominal speed at > 90 % PWM. Standstill at 0 % PWM, standstill if control cable is interrupted.

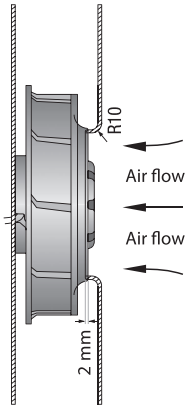


The air flow and noise level of the centrifugal fans without external housing depend on their individual installation conditions. The stated air flow and noise level were recorded under the following measurement parameters:
Centrifugal fan mounted on a foundation plate 180 x 180 mm.
Cover plate 180 x 180 mm, with an air inlet opening Ø 125,5 mm, arranged concentrically to the impeller.

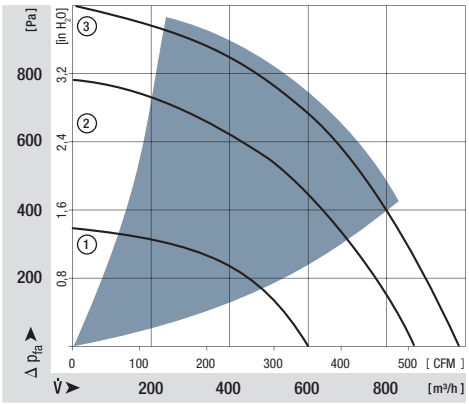


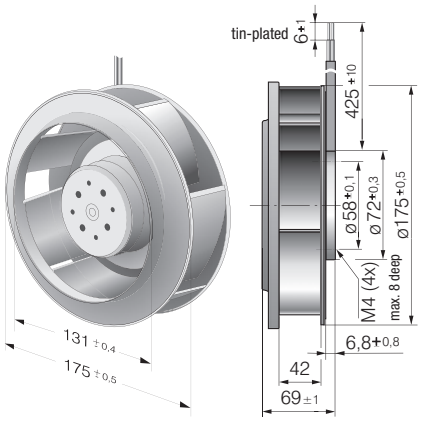

max. 970 m³/h

S-Force

# DC centrifugal fans

## Series RER 190 TD Ø 190 x 69 mm

- **Material:** Impeller: GRP[1)]
- **Direction of air flow:** Axial: Intake, Centrifugal: Exhaust
- **Direction of rotation:** Clockwise, seen on rotor
- **Connection:** Via single wires AWG 18, 20 or AWG 22, TR 64, speed signal and control input AWG 22
- **Highlights:** 3-phase fan drive with very smooth running and high efficiency
  Backwards-curved RadiCal impeller
- **Mass:** 870 g

1) Fibreglass-reinforced plastic

- **Possible special versions:**
  (See chapter DC fans - specials)
  - Speed signal
  - Go / No-go alarm
  - Alarm with limit speed
  - External temperature sensor
  - Internal temperature sensor
  - PWM control input
  - Analogue control input
  - Multi-option control input
  - Protection against moisture
  - Protection against salt fog
  - Type of protection: IP 54

| Nominal data | Air flow | Air flow | Nominal voltage | Voltage range | Sound power level | Sintec sleeve bearings / Ball bearings | Input power | Nominal speed | Temperature range | Service life $L_{10}$ (40 °C) ebm-papst Standard / Service life $L_{10}$ ($T_{max}$) ebm-papst Standard | Life expectancy $L_{10IPC}$ (40 °C) see page 17 | Curve |
|---|---|---|---|---|---|---|---|---|---|---|---|---|
| **Type** | **m³/h** | **CFM** | **VDC** | **VDC** | **Bel(A)** | □ / ■ | **Watts** | **rpm** | **°C** | **Hours** | **Hours** | |
| RER 190-39/14/2 TDML0 | 650 | 382 | **24** | 16...30 | 7,6 | ■ | 58 | 3 000 | -20...+60 | 55 000 / 35 000 | 92 500 | ① |
| RER 190-39/14/2 TDM0 | 860 | 506 | **24** | 16...36 | 7,9 | ■ | 110 | 3 900 | -20...+65 | 52 500 / 30 000 | 87 500 | ② |
| RER 190-39/18/2 TDML0* | 650 | 382 | **48** | 36...57 | 7,6 | ■ | 56 | 3 000 | -20...+65 | 55 000 / 30 000 | 92 500 | ① |
| RER 190-39/18/2 TDM0* | 860 | 506 | **48** | 36...72 | 7,9 | ■ | 105 | 3 900 | -20...+65 | 52 500 / 30 000 | 87 500 | ② |
| RER 190-39/18/2 TD0 | 970 | 571 | **48** | 36...72 | 8,3 | ■ | 148 | 4 400 | -20...+65 | 40 000 / 22 500 | 67 500 | ③ |

* Auf Anfrage

Subject to alternations

Speed control range from 800 rpm at 7 % PWM up to nominal speed at > 90 % PWM. Standstill at 0 % PWM, standstill if control cable is interrupted.

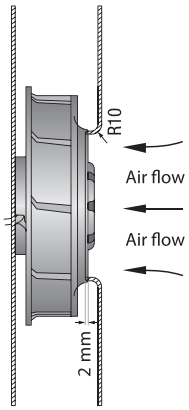


The air flow and noise level of the centrifugal fans without external housing depend on their individual installation conditions. The stated air flow and noise level were recorded under the following measurement parameters:
Centrifugal fan mounted on a foundation plate 195 x 195 mm.
Cover plate 195 x 195 mm, with an air inlet opening Ø 125,5 mm, arranged concentrically to the impeller.

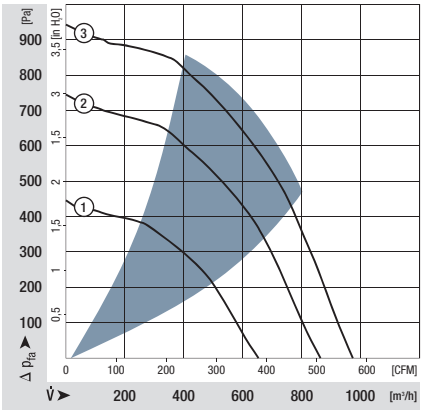


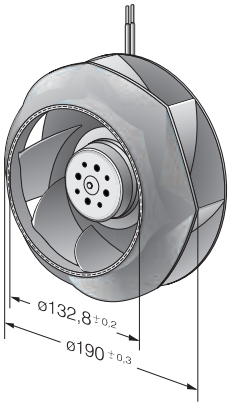


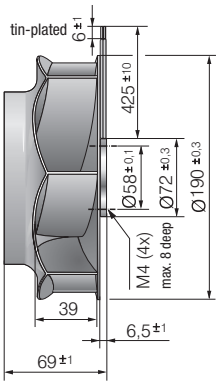




Inlet nozzles
from p. 248

ebmpapst

max. 930 m³/h

# DC centrifugal fans – RadiCal

## Ø 190 mm

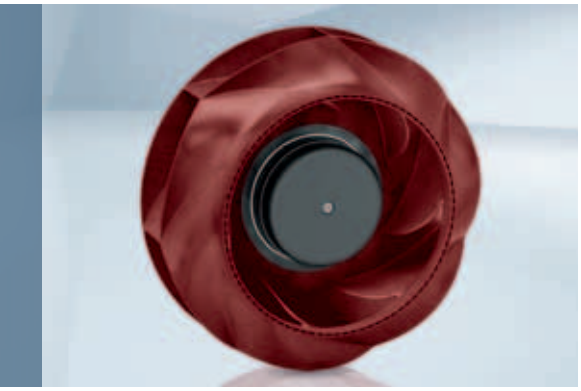

- **Material:** Impeller: Plastic PA
  Rotor: Coated in black
- **Number of blades:** 7
- **Direction of rotation:** Clockwise, seen on rotor
- **Type of protection:** IP 44, depending on installation and position
- **Insulation class:** "B"
- **Mounting position:** Any
- **Condensate discharges:** None
- **Operation mode:** Continuous operation (S1)
- **Bearings:** Maintenance-free ball bearings

| Nominal data | | Curve | Nominal voltage | Voltage range | Air flow | Speed / rpm | Input power | Current draw | Sound power level | Perm. amb. temp. | Technical features and electrical connections |
|---|---|---|---|---|---|---|---|---|---|---|---|
| **Type** | **Motor** | | **VDC** | **VDC** | **m³/h** | **rpm** | **W** | **A** | **dB(A)** | **°C** | |
| **R3G 190** | M3G 074-CF | A | 24 | 16-28 | 880 | 4570 | 180 | 7,50 | 76 | -25..+60 | p. 258 / J5) |
| **R3G 190** | M3G 074-CF | B | 48 | 36-57 | 930 | 4800 | 192 | 4,00 | 76 | -25..+60 | p. 258 / J5) |

Subject to alternations

**Curve:**

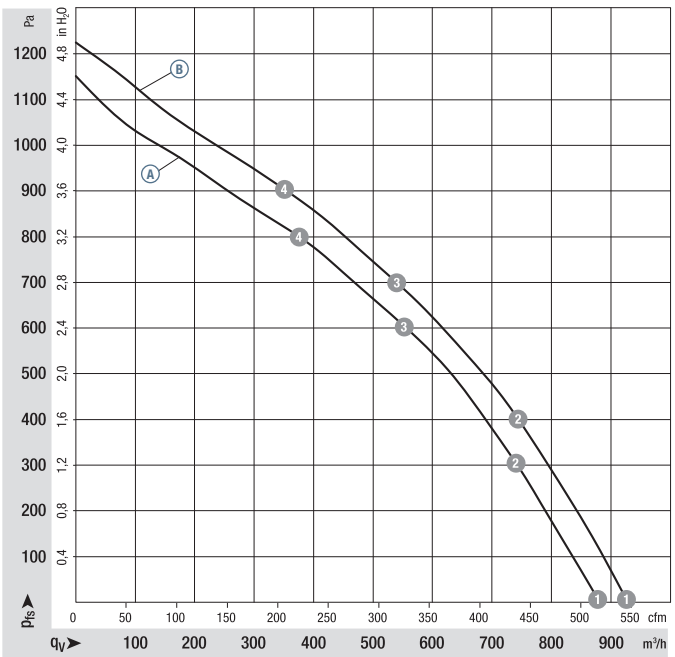


| | | n rpm | $P_{ed}$ W | I A | $L_WA$ dB(A) |
|---|---|---|---|---|---|
| A | 1 | 4570 | 180 | 7,50 | 84 |
| A | 2 | 4525 | 188 | 7,83 | 79 |
| A | 3 | 4435 | 199 | 8,34 | 77 |
| A | 4 | 4520 | 191 | 7,96 | 81 |
| B | 1 | 4800 | 192 | 4,00 | 84 |
| B | 2 | 4690 | 212 | 4,41 | 80 |
| B | 3 | 4640 | 221 | 4,60 | 79 |
| B | 4 | 4740 | 205 | 4,28 | 81 |

Air performance measured as per: ISO 5801, Installation category A, with ebm-papst inlet nozzle without protection against accidental contact. Suction-side noise levels: LWA as per ISO 13347, LpA measured at 1 m distance to fan axis. The acoustic values given are only valid under the measurment conditions listed and may vary depending on the installation situation. With any deviation to the standard setup, the specific values have to be checked and reviewed once installed or fitted!
For detailed information see http://www.ebmpapst.com/general conditions



ebmpapst

- **Technical features:** See electrical connections p. 258
- **Cable exit:** Variabel
- **Product conforming to standards:** EN 60950-1
- **Approvals:** GOST

Mass centrifugal fans

| Centrifugal fans | kg | Inlet nozzle |
|---|---|---|
| **R3G 190-RN38 -01** | 1,9 | 09576-2-4013 |
| **R3G 190-RN99 -02** | 1,9 | 09576-2-4013 |

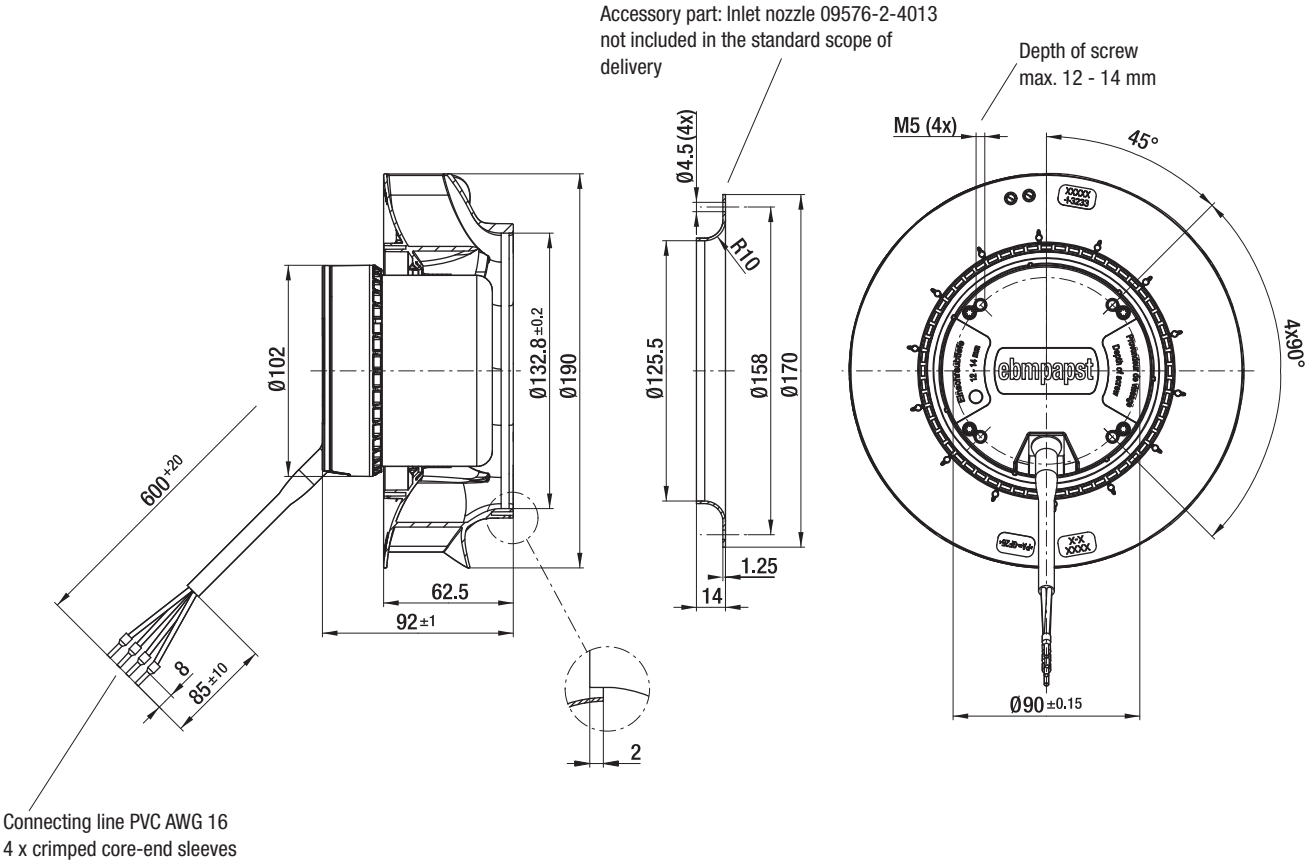

max. 1210 m³/h

# DC centrifugal fans – RadiCal

## Ø 220 mm

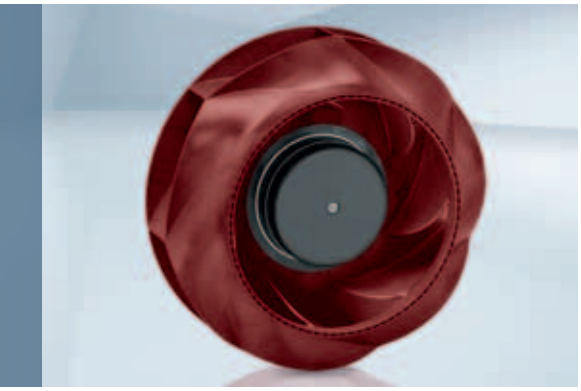

- **Material:** Impeller: Plastic PA
  Rotor: Coated in black
- **Number of blades:** 7
- **Direction of rotation:** Clockwise, seen on rotor
- **Type of protection:** IP 44, depending on installation and position
- **Insulation class:** "B"
- **Mounting position:** Any
- **Condensate discharges:** None
- **Operation mode:** Continuous operation (S1)
- **Bearings:** Maintenance-free ball bearings

| Nominal data | | Curve | Nominal voltage | Voltage range | Air flow | Speed / rpm | Input power | Current draw | Sound power level | Perm. amb. temp. | Technical features and electrical connections |
|---|---|---|---|---|---|---|---|---|---|---|---|
| **Type** | **Motor** | | **VDC** | **VDC** | **m³/h** | **rpm** | **W** | **A** | **dB(A)** | **°C** | |
| **R3G 220** | M3G 074-CF | A | 24 | 16-28 | 1185 | 3480 | 162 | 6,75 | 73 | -25...+60 | p. 258 / J5) |
| **R3G 220** | M3G 074-CF | B | 48 | 36-57 | 1210 | 3510 | 160 | 3,40 | 73 | -25...+60 | p. 258 / J5) |

Subject to alternations

**Curve:**

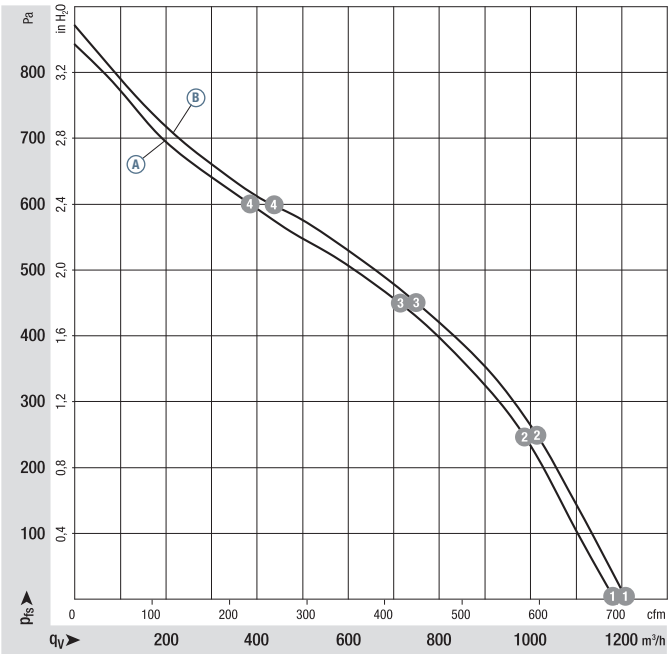


| | | n rpm | $P_{ed}$ W | I A | $L_WA$ dB(A) |
|---|---|---|---|---|---|
| A | 1 | 3480 | 162 | 6,75 | 81 |
| A | 2 | 3420 | 171 | 7,11 | 77 |
| A | 3 | 3360 | 182 | 7,59 | 74 |
| A | 4 | 3455 | 168 | 6,97 | 79 |
| B | 1 | 3510 | 160 | 3,40 | 81 |
| B | 2 | 3450 | 168 | 3,50 | 77 |
| B | 3 | 3385 | 178 | 3,71 | 74 |
| B | 4 | 3460 | 167 | 3,47 | 79 |

Air performance measured as per: ISO 5801, Installation category A, with ebm-papst inlet nozzle without protection against accidental contact. Suction-side noise levels: LWA as per ISO 13347, LpA measured at 1 m distance to fan axis. The acoustic values given are only valid under the measurment conditions listed and may vary depending on the installation situation. With any deviation to the standard setup, the specific values have to be checked and reviewed once installed or fitted!
For detailed information see http://www.ebmpapst.com/general conditions



ebmpapst

- **Technical features:** See electrical connections p. 258
- **Cable exit:** Variabel
- **Product conforming to standards:** EN 60950-1
- **Approvals:** GOST

Mass centrifugal fans

| Centrifugal fans | kg | Inlet nozzle |
|---|---|---|
| **R3G 220-RN12 -01** | 1,9 | 09609-2-4013 |
| **R3G 220-RNB6 -02** | 1,9 | 09609-2-4013 |

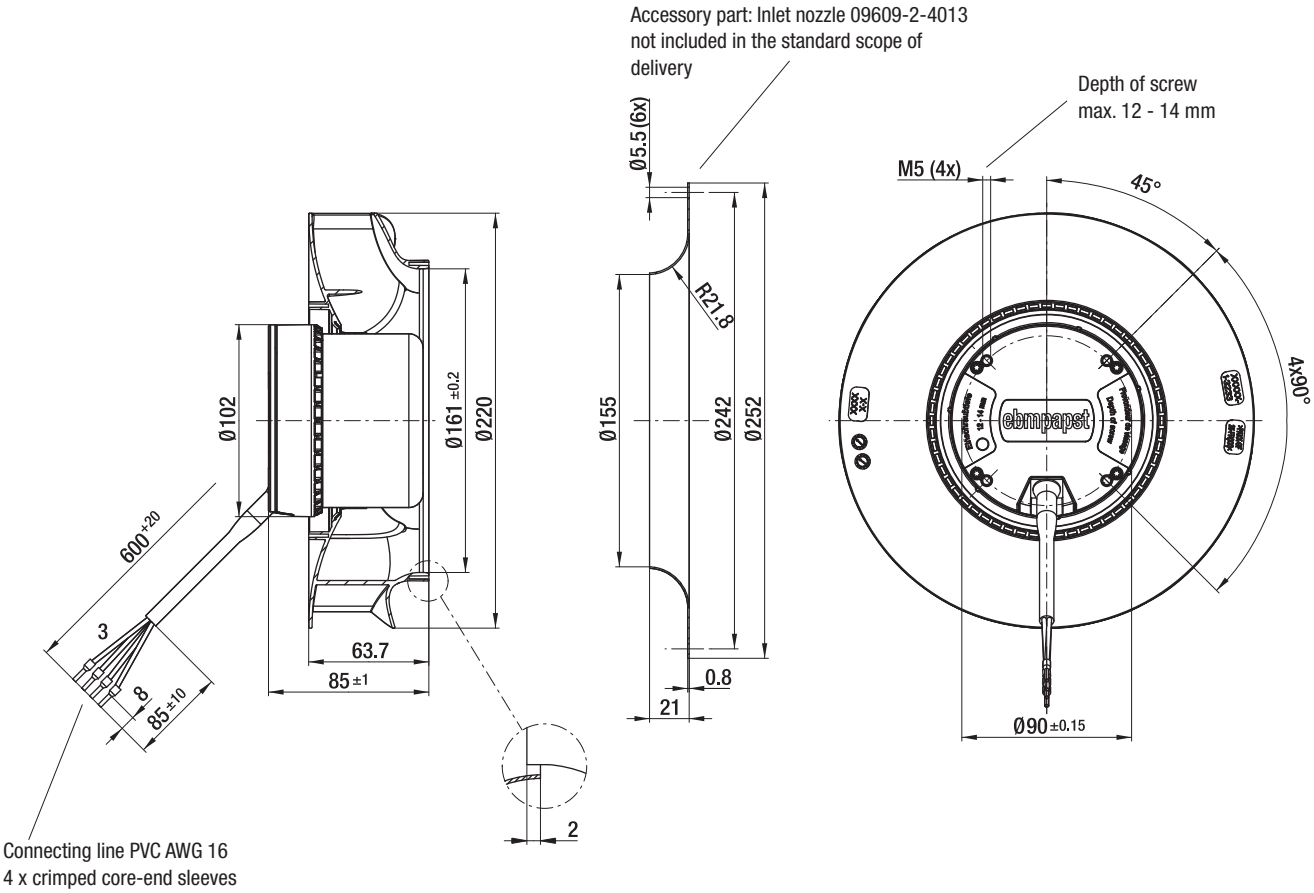

max. 1280 m³/h

S-Force

# DC centrifugal fans

## Series RER 220 TD Ø 221 x 71 mm

- **Material:** Impeller: GRP[1)]
- **Direction of air flow:** Axial: Intake
  Centrifugal: Exhaust
- **Direction of rotation:** Clockwise, seen on rotor
- **Connection:** Via single wires AWG 18, 20 or AWG 22, TR 64, speed signal and control input AWG 22
- **Highlights:** 3-phase fan drive with very smooth running and high efficiency
  Backwards-curved impeller
- **Mass:** 940 g

1) Fibreglass-reinforced plastic

- **Possible special versions:**
  (See chapter DC fans - specials)
  - Speed signal
  - Go / No-go alarm
  - Alarm with limit speed
  - External temperature sensor
  - Internal temperature sensor
  - PWM control input
  - Analogue control input
  - Multi-option control input
  - Protection against moisture
  - Protection against salt fog
  - Type of protection: IP 54

| Nominal data | Air flow | Air flow | Nominal voltage | Voltage range | Sound power level | Sintec sleeve bearings / Ball bearings | Input power | Nominal speed | Temperature range | Service life $L_{10}$ (40 °C) ebm-papst Standard / Service life $L_{10}$ ($T_{max}$) ebm-papst Standard | Life expectancy $L_{10IPC}$ (40 °C) see page 17 | Curve |
|---|---|---|---|---|---|---|---|---|---|---|---|---|
| **Type** | **m³/h** | **CFM** | **VDC** | **VDC** | **Bel(A)** | □/■ | **Watts** | **rpm** | **°C** | **Hours** | **Hours** | |
| RER 220-44/14/2 TDM0* | 1090 | 641 | **24** | 16...36 | 7,7 | ■ | 82 | 3 000 | -20...+55 | 75 000 / 52 500 | 127 500 | ① |
| RER 220-44/18/2 TDM0* | 1090 | 641 | **48** | 36...72 | 7,7 | ■ | 80 | 3 000 | -20...+55 | 75 000 / 52 500 | 127 500 | ① |
| RER 220-44/18/2 TDP | 1280 | 753 | **48** | 36...72 | 8,0 | ■ | 140 | 3 500 | -20...+55 | 55 000 / 40 000 | 92 500 | ② |

* upon request

Subject to alternations

Speed control range from 800 rpm at 7 % PWM up to nominal speed at > 90 % PWM. Standstill at 0 % PWM, standstill if control cable is interrupted.

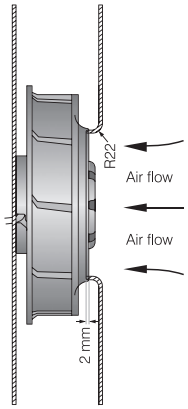


The air flow and noise level of the centrifugal fans without external housing depend on their individual installation conditions. The stated air flow and noise level were recorded under the following measurement parameters:
Centrifugal fan mounted on a foundation plate 230 x 230 mm.
Cover plate 230 x 230 mm, with an air inlet opening Ø 155 mm, arranged concentrically to the impeller.

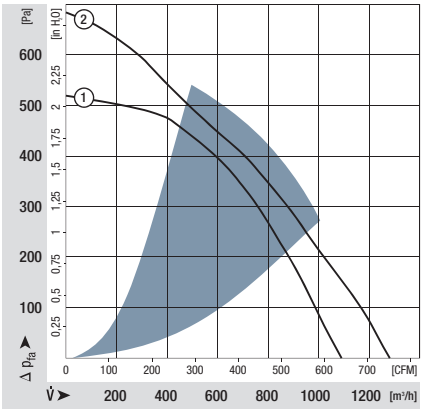


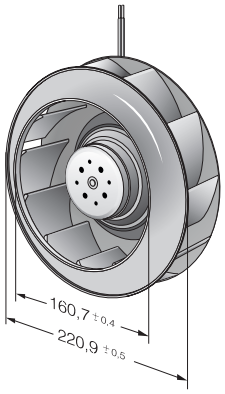


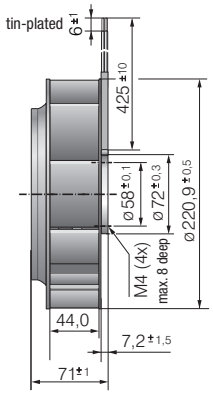




Inlet nozzles
from p. 248

ebmpapst

max. 1600 m³/h

S-Force

# DC centrifugal fans

## Series RER 225 TD Ø 225 x 99 mm

- **Material:** Impeller: GRP[1)]
- **Direction of air flow:** Axial: Intake
  Centrifugal: Exhaust
- **Direction of rotation:** Clockwise, seen on rotor
- **Connection:** Via single wires AWG 18, 20 or AWG 22, TR 64, speed signal and control input AWG 22
- **Highlights:** 3-phase fan drive with very smooth running and high efficiency
  Backwards-curved impeller
- **Mass:** 1030 g

1) Fibreglass-reinforced plastic

- **Possible special versions:**
  (See chapter DC fans - specials)
  - Speed signal
  - Go / No-go alarm
  - Alarm with limit speed
  - External temperature sensor
  - Internal temperature sensor
  - PWM control input
  - Analogue control input
  - Multi-option control input
  - Protection against moisture
  - Protection against salt fog
  - Type of protection: IP 54

| | Nominal data | Air flow | Air flow | Nominal voltage | Voltage range | Sound power level | Sintec sleeve bearings / Ball bearings | Input power | Nominal speed | Temperature range | Service life $L_{10}$ (40 °C) ebm-papst Standard / Service life $L_{10}$ ($T_{max}$) ebm-papst Standard | Life expectancy $L_{10IPC}$ (40 °C) see page 17 | Curve |
|---|---|---|---|---|---|---|---|---|---|---|---|---|---|
| | **Type** | **m³/h** | **CFM** | **VDC** | **VDC** | **Bel(A)** | □/■ | **Watts** | **rpm** | **°C** | **Hours** | **Hours** | |
| NEW | RER 225-63/18/2 TDMLO | 1190 | 700 | **48** | 36...72 | 7,2 | ■ | 77 | 2 500 | -20...+55 | 70 000 / 50 000 | 122 500 | ① |
| NEW | RER 225-63/18/2 TDMO | 1340 | 789 | **48** | 36...72 | 7,8 | ■ | 108 | 2 800 | -20...+55 | 55 000 / 40 000 | 92 500 | ② |
| NEW | RER 225-63/18/2 TDO | 1600 | 941 | **48** | 36...72 | 8,1 | ■ | 163 | 3 300 | -20...+55 | 52 500 / 37 500 | 87 500 | ③ |

Subject to alternations

Speed control range from 800 rpm at 7 % PWM up to nominal speed at > 90 % PWM. Standstill at 0 % PWM, standstill if control cable is interrupted.

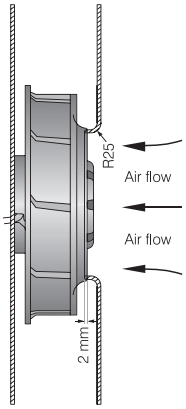


The air flow and noise level of the centrifugal fans without external housing depend on their individual installation conditions. The stated air flow and noise level were recorded under the following measurement parameters:
Centrifugal fan mounted on a foundation plate 230 x 230 mm.
Cover plate 230 x 230 mm, with an air inlet opening Ø 146 mm, arranged concentrically to the impeller.

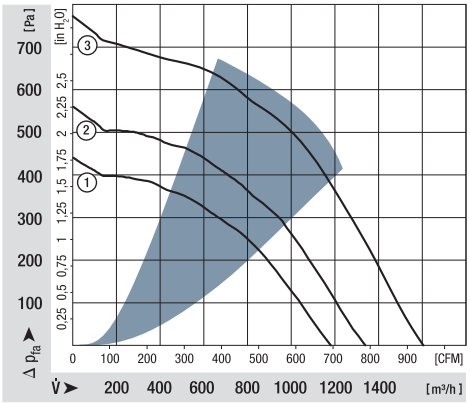


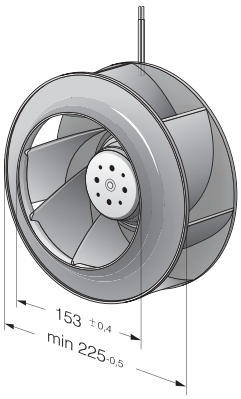


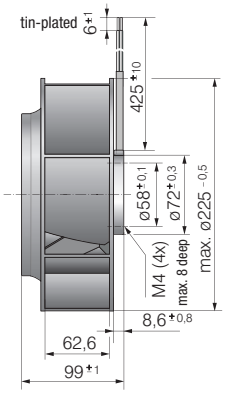

max. 1400 m³/h

# DC centrifugal fans – RadiCal

## Ø 225 mm

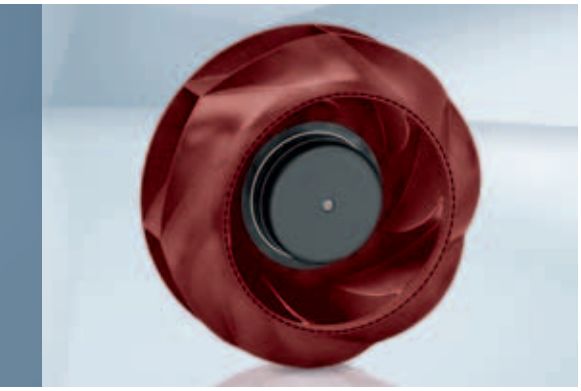

- **Material:** Impeller: Plastic PA
  Rotor: Coated in black
- **Number of blades:** 7
- **Direction of rotation:** Clockwise, seen on rotor
- **Type of protection:** IP 44, depending on installation and position
- **Insulation class:** "B"
- **Mounting position:** Any
- **Condensate discharges:** None
- **Operation mode:** Continuous operation (S1)
- **Bearings:** Maintenance-free ball bearings

| Nominal data | | Curve | Nominal voltage | Voltage range | Air flow | Speed / rpm | Input power | Current draw | Sound power level | Perm. amb. temp. | Technical features and electrical connections |
|---|---|---|---|---|---|---|---|---|---|---|---|
| **Type** | **Motor** | | **VDC** | **VDC** | **m³/h** | **rpm** | **W** | **A** | **dB(A)** | **°C** | |
| **R3G 225** | M3G 074-CF | A | 24 | 16-28 | 1275 | 3240 | 200 | 8,30 | 75 | -25...+60 | p. 258 / J5) |
| **R3G 225** | M3G 074-CF | B | 48 | 36-57 | 1400 | 3500 | 245 | 5,00 | 73 | -25...+60 | p. 258 / J5) |

Subject to alternations

**Curve:**

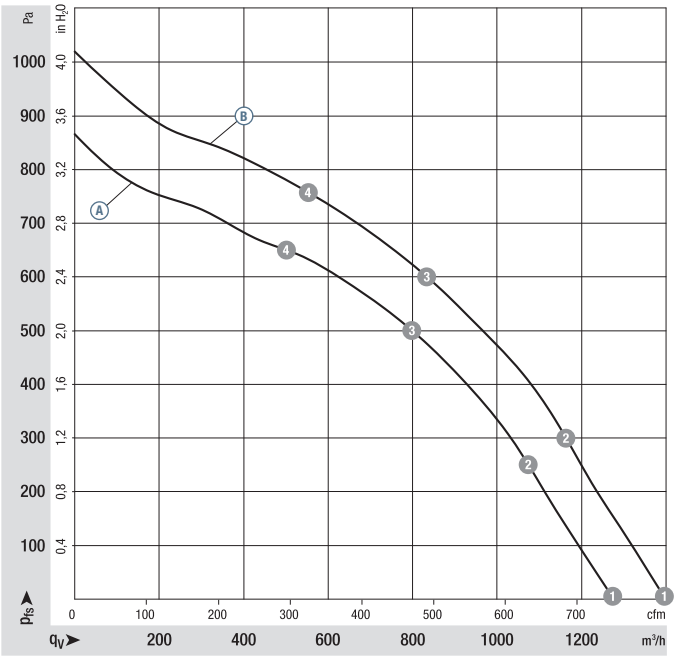


| | | n rpm | $P_{ed}$ W | I A | $L_WA$ dB(A) |
|---|---|---|---|---|---|
| A | 1 | 3240 | 200 | 8,30 | 81 |
| A | 2 | 3200 | 208 | 8,66 | 78 |
| A | 3 | 3185 | 213 | 8,88 | 74 |
| A | 4 | 3260 | 194 | 8,02 | 77 |
| B | 1 | 3500 | 245 | 5,00 | 83 |
| B | 2 | 3440 | 257 | 5,35 | 80 |
| B | 3 | 3435 | 260 | 5,43 | 76 |
| B | 4 | 3500 | 239 | 4,97 | 78 |

Air performance measured as per: ISO 5801, Installation category A, with ebm-papst inlet nozzle without protection against accidental contact. Suction-side noise levels: LWA as per ISO 13347, LpA measured at 1 m distance to fan axis. The acoustic values given are only valid under the measurment conditions listed and may vary depending on the installation situation. With any deviation to the standard setup, the specific values have to be checked and reviewed once installed or fitted!
For detailed information see http://www.ebmpapst.com/general conditions



ebmpapst

- **Technical features:** See electrical connections p. 258
- **Cable exit:** Variabel
- **Product conforming to standards:** EN 60950-1
- **Approvals:** GOST

Mass centrifugal fans

| Centrifugal fans | kg | Inlet nozzle |
|---|---|---|
| **R3G 225-RN28 -01** | 2,1 | 96358-2-4013 |
| **R3G 225-RN18 -02** | 2,1 | 96358-2-4013 |

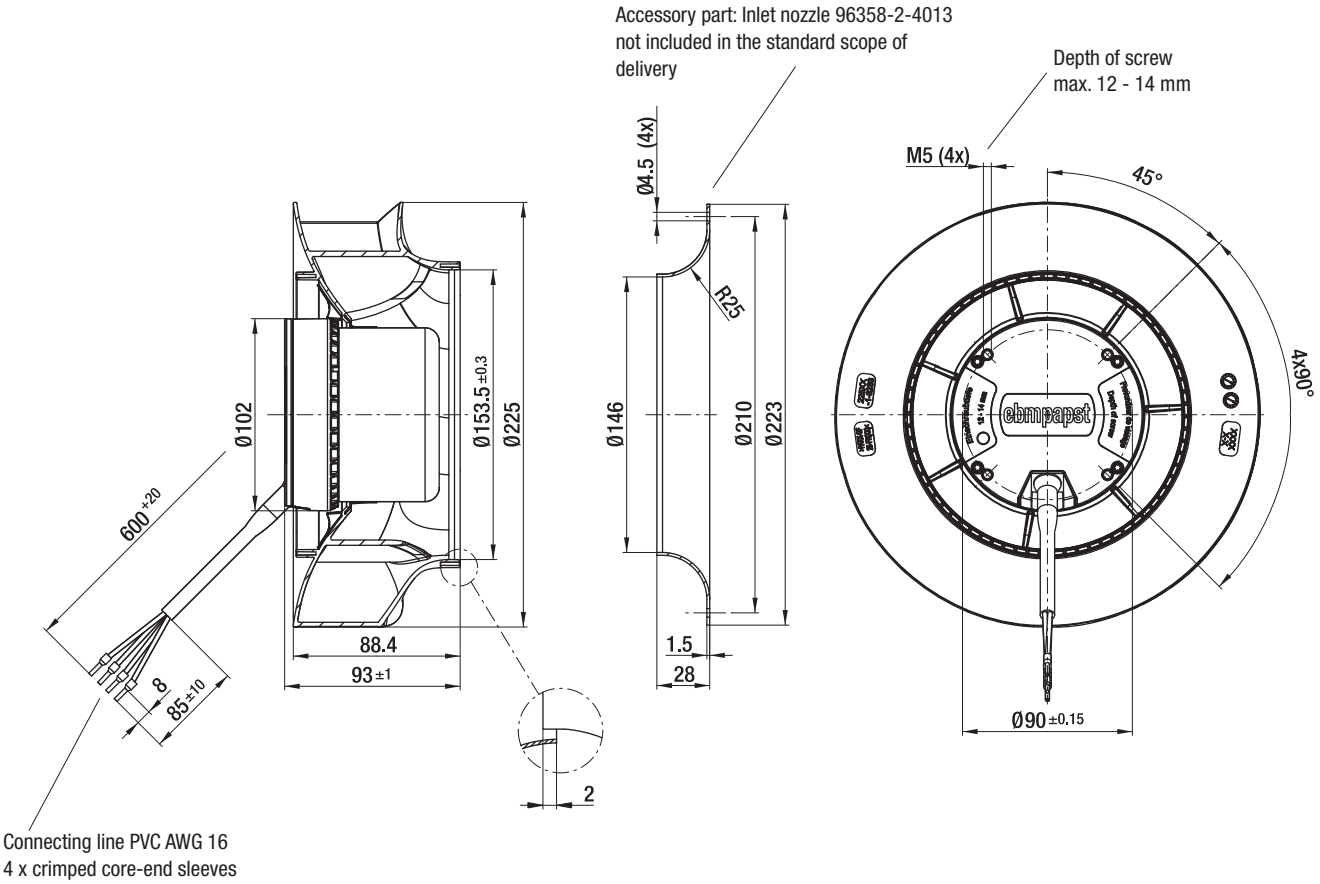

max. 1650 m³/h

# DC centrifugal fans – RadiCal

## Ø 250 mm

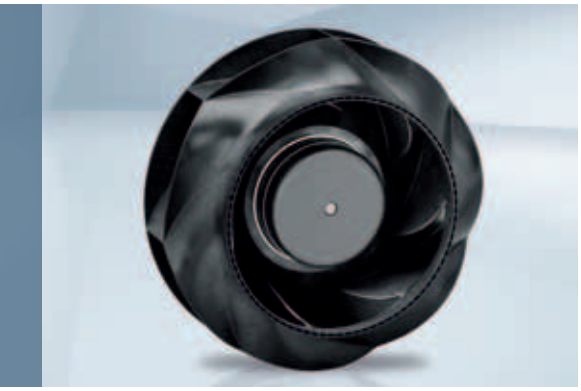

- **Material:** Impeller: Plastic PA
  Rotor: Coated in black
- **Number of blades:** 7
- **Direction of rotation:** Clockwise, seen on rotor
- **Type of protection:** IP 44, depending on installation and position
- **Insulation class:** "B"
- **Mounting position:** Any
- **Condensate discharges:** None
- **Operation mode:** Continuous operation (S1)
- **Bearings:** Maintenance-free ball bearings

| Nominal data | | Curve | Nominal voltage | Voltage range | Air flow | Speed / rpm | Input power | Current draw | Sound power level | Perm. amb. temp. | Technical features and electrical connections |
|---|---|---|---|---|---|---|---|---|---|---|---|
| **Type** | **Motor** | | **VDC** | **VDC** | **m³/h** | **rpm** | **W** | **A** | **dB(A)** | **°C** | |
| **R3G 250** | M3G 074-CF | A | 24 | 16-28 | 1650 | 3140 | 236 | 9,80 | 73 | -25...+60 | p. 258 / J5) |
| **R3G 250** | M3G 074-CF | B | 48 | 36-57 | 1640 | 3125 | 230 | 4,75 | 73 | -25...+60 | p. 258 / J5) |

Subject to alternations

**Curve:**

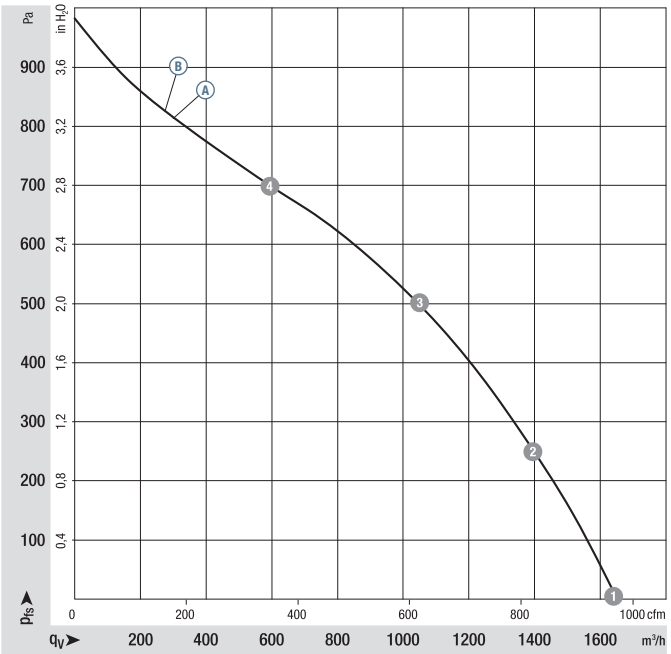


| | | n rpm | $P_{ed}$ W | I A | $L_WA$ dB(A) |
|---|---|---|---|---|---|
| A | 1 | 3140 | 236 | 9,80 | 81 |
| A | 2 | 3075 | 260 | 10,80 | 77 |
| A | 3 | 3035 | 276 | 11,45 | 75 |
| A | 4 | 3095 | 256 | 10,66 | 75 |
| B | 1 | 3125 | 230 | 4,75 | 81 |
| B | 2 | 3065 | 249 | 5,20 | 77 |
| B | 3 | 3025 | 266 | 5,55 | 75 |
| B | 4 | 3090 | 244 | 5,09 | 78 |

Air performance measured as per: ISO 5801, Installation category A, with ebm-papst inlet nozzle without protection against accidental contact. Suction-side noise levels: LWA as per ISO 13347, LpA measured at 1 m distance to fan axis. The acoustic values given are only valid under the measurment conditions listed and may vary depending on the installation situation. With any deviation to the standard setup, the specific values have to be checked and reviewed once installed or fitted!
For detailed information see http://www.ebmpapst.com/general conditions



ebmpapst

- **Technical features:** See electrical connections p. 258
- **Cable exit:** Variabel
- **Product conforming to standards:** EN 60950-1
- **Approvals:** GOST

Mass centrifugal fans

| Centrifugal fans | kg | Inlet nozzle |
|---|---|---|
| **R3G 250-RN46 -01** | 2,1 | 96359-2-4013 |
| **R3G 250-RNB5 -02** | 2,1 | 96359-2-4013 |

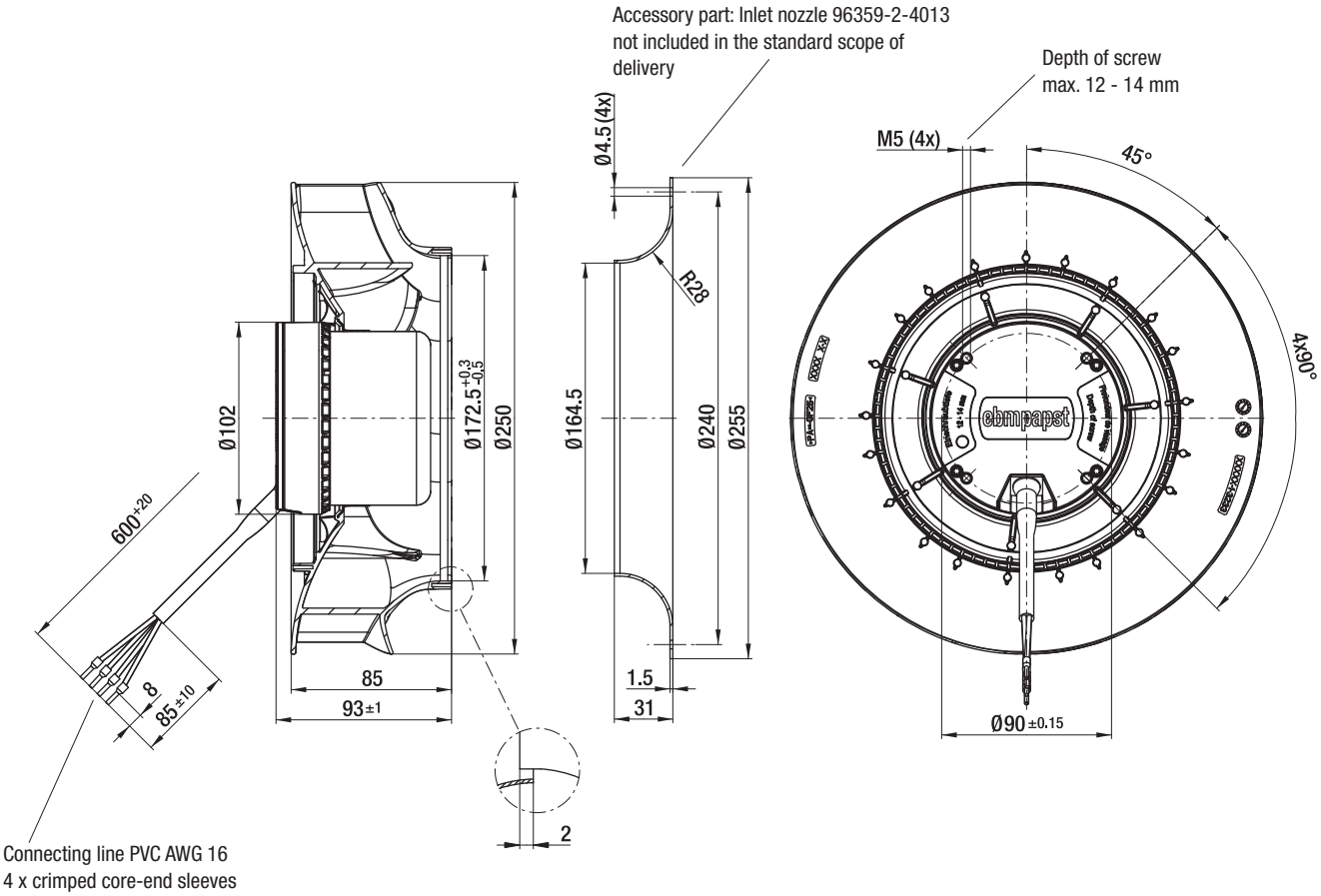

max. 2210 m³/h

# DC centrifugal fans – RadiCal

## Ø 280 mm

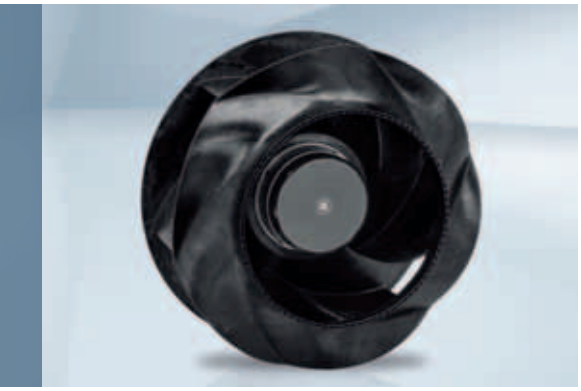

- **Material:** Impeller: Plastic PP
  Rotor: Coated in black
- **Number of blades:** 6
- **Direction of rotation:** Clockwise, seen on rotor
- **Type of protection:** IP 44, depending on installation and position
- **Insulation class:** "B"
- **Mounting position:** Any
- **Condensate discharges:** None
- **Operation mode:** Continuous operation (S1)
- **Bearings:** Maintenance-free ball bearings

| Nominal data | | Curve | Nominal voltage | Voltage range | Air flow | Speed / rpm | Input power | Current draw | Sound power level | Perm. amb. temp. | Technical features and electrical connections |
|---|---|---|---|---|---|---|---|---|---|---|---|
| **Type** | **Motor** | | **VDC** | **VDC** | **m³/h** | **rpm** | **W** | **A** | **dB(A)** | **°C** | |
| **R3G 280** | M3G 074-CF | A | 24 | 16-28 | 2210 | 1930 | 148 | 6,10 | 67 | -25...+60 | p. 258 / J5) |
| **R3G 280** | M3G 074-CF | B | 48 | 36-57 | 2175 | 1910 | 140 | 2,90 | 67 | -25...+60 | p. 258 / J5) |

Subject to alternations

**Curve:**

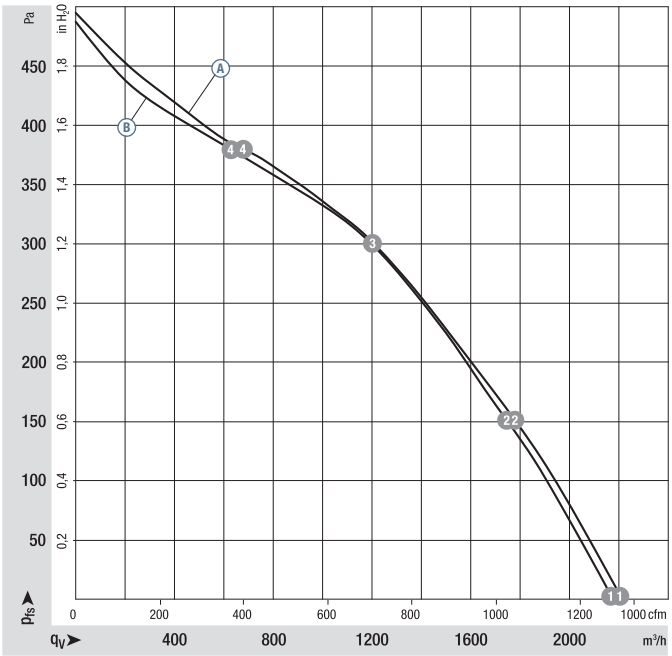


| | | n rpm | $P_{ed}$ W | I A | $L_WA$ dB(A) |
|---|---|---|---|---|---|
| A | 1 | 1930 | 148 | 6,10 | 74 |
| A | 2 | 1870 | 162 | 6,76 | 67 |
| A | 3 | 1840 | 173 | 7,21 | 64 |
| A | 4 | 1905 | 153 | 6,36 | 68 |
| B | 1 | 1910 | 140 | 2,90 | 74 |
| B | 2 | 1845 | 158 | 3,30 | 67 |
| B | 3 | 1830 | 163 | 3,40 | 64 |
| B | 4 | 1900 | 141 | 2,93 | 68 |

Air performance measured as per: ISO 5801, Installation category A, with ebm-papst inlet nozzle without protection against accidental contact. Suction-side noise levels: LWA as per ISO 13347, LpA measured at 1 m distance to fan axis. The acoustic values given are only valid under the measurment conditions listed and may vary depending on the installation situation. With any deviation to the standard setup, the specific values have to be checked and reviewed once installed or fitted!
For detailed information see http://www.ebmpapst.com/general conditions



ebmpapst

- **Technical features:** See electrical connections p. 258
- **Cable exit:** Variabel
- **Product conforming to standards:** EN 60950-1
- **Approvals:** GOST

Mass centrifugal fans

| Centrifugal fans | kg | Inlet nozzle |
|---|---|---|
| **R3G 280-RN30 -01** | 2,4 | 28000-2-4013 |
| **R3G 280-RNB1 -02** | 2,4 | 28000-2-4013 |

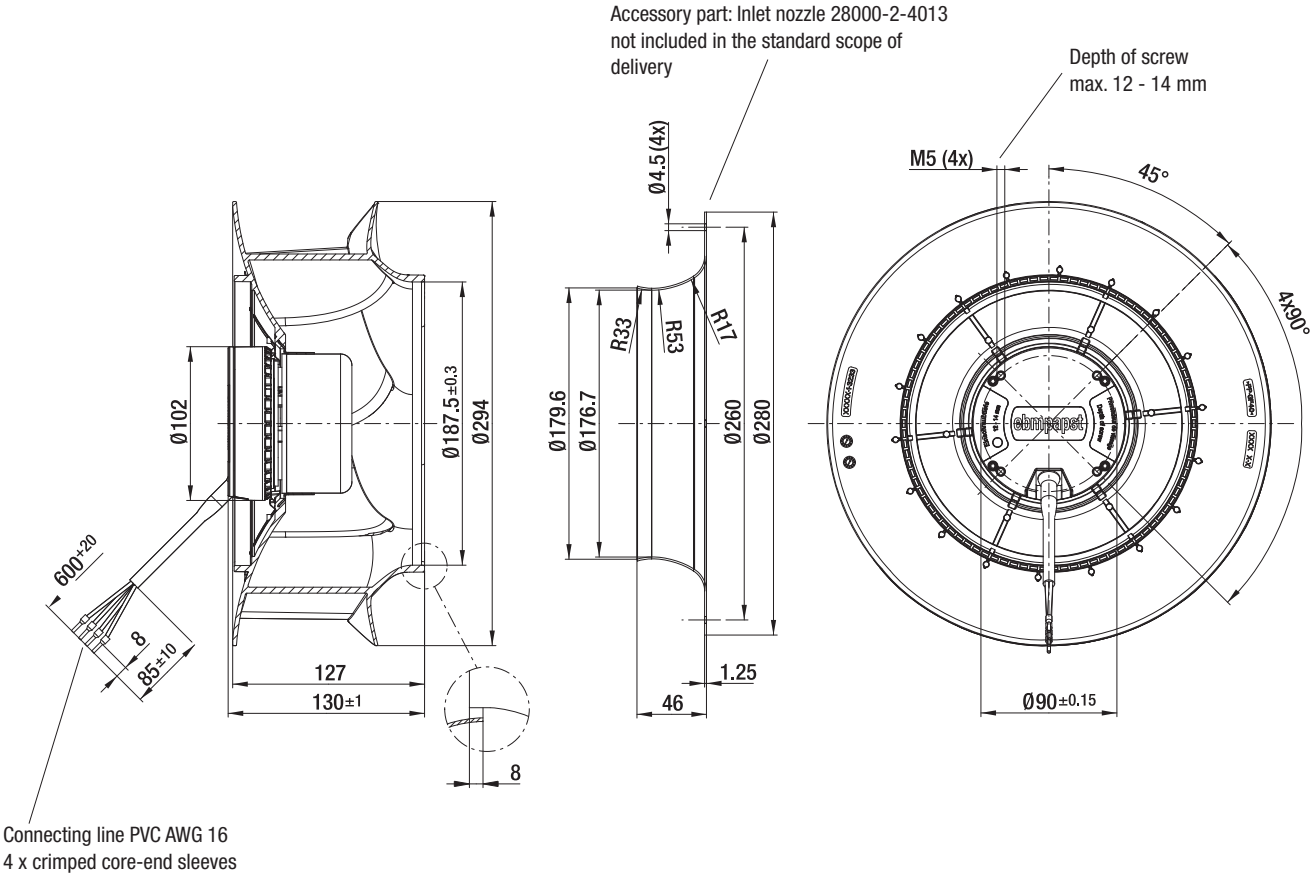

max. 2420 m³/h

# DC centrifugal fans – RadiCal

## Ø 310 mm

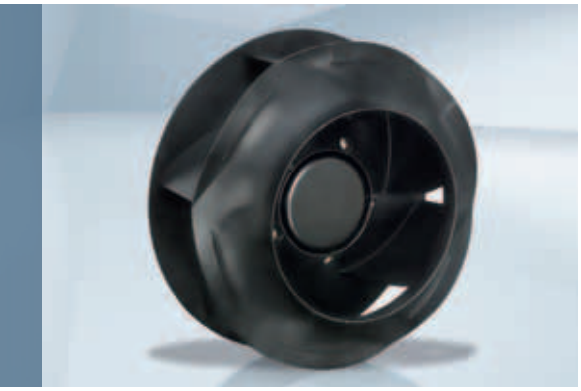

- **Material:** Impeller: Plastic PP
  Rotor: Coated in black
- **Number of blades:** 6
- **Direction of rotation:** Clockwise, seen on rotor
- **Type of protection:** IP 44, depending on installation and position
- **Insulation class:** "B"
- **Mounting position:** Any
- **Condensate discharges:** None
- **Operation mode:** Continuous operation (S1)
- **Bearings:** Maintenance-free ball bearings

| Nominal data | | Curve | Nominal voltage | Voltage range | Air flow | Speed / rpm | Input power | Current draw | Sound power level | Perm. amb. temp. | Technical features and electrical connections |
|---|---|---|---|---|---|---|---|---|---|---|---|
| **Type** | **Motor** | | **VDC** | **VDC** | **m³/h** | **RPM** | **W** | **A** | **dB(A)** | **°C** | |
| **R3G 310** | M3G 074-CF | A | 24 | 16-28 | 2380 | 1625 | 122 | 5,00 | 64 | -25...+60 | p. 258 / J5) |
| **R3G 310** | M3G 074-CF | B | 48 | 36-57 | 2420 | 1650 | 123 | 2,60 | 64 | -25...+60 | p. 258 / J5) |

Subject to alternations

**Curve:**

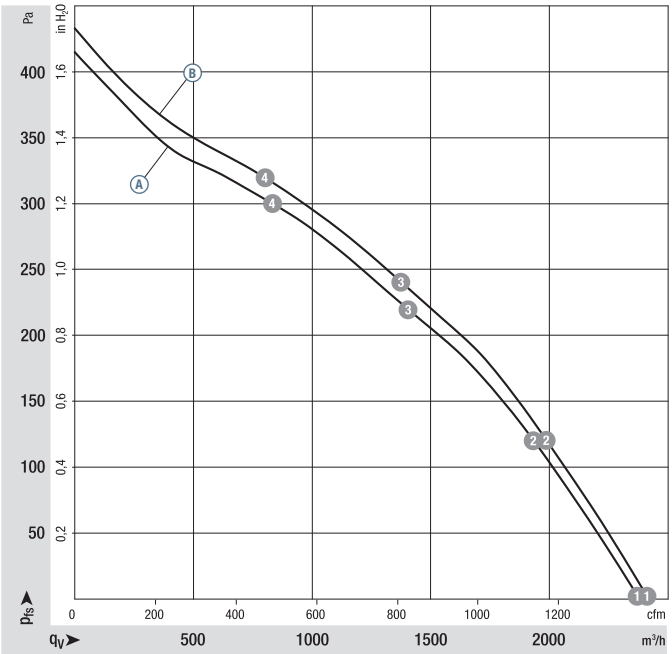


| | | n rpm | $P_{ed}$ W | I A | $L_WA$ dB(A) |
|---|---|---|---|---|---|
| A | 1 | 1625 | 122 | 5,00 | 70 |
| A | 2 | 1540 | 145 | 6,03 | 67 |
| A | 3 | 1520 | 152 | 6,34 | 63 |
| A | 4 | 1550 | 143 | 5,95 | 65 |
| B | 1 | 1650 | 123 | 2,60 | 70 |
| B | 2 | 1570 | 147 | 3,07 | 66 |
| B | 3 | 1545 | 156 | 3,26 | 63 |
| B | 4 | 1580 | 144 | 3,01 | 66 |

Air performance measured as per: ISO 5801, Installation category A, with ebm-papst inlet nozzle without protection against accidental contact. Suction-side noise levels: LWA as per ISO 13347, LpA measured at 1 m distance to fan axis. The acoustic values given are only valid under the measurment conditions listed and may vary depending on the installation situation. With any deviation to the standard setup, the specific values have to be checked and reviewed once installed or fitted!
For detailed information see http://www.ebmpapst.com/general conditions



ebmpapst

- **Technical features:** See electrical connections p. 258
- **Cable exit:** Variabel
- **Product conforming to standards:** EN 60950-1
- **Approvals:** GOST

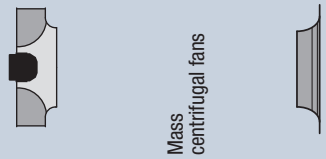

| Centrifugal fans | Mass centrifugal fans kg | Inlet nozzle |
|---|---|---|
| **R3G 310-RN99 -01** | 2,8 | 31000-2-4013 |
| **R3G 310-RN98 -02** | 2,8 | 31000-2-4013 |

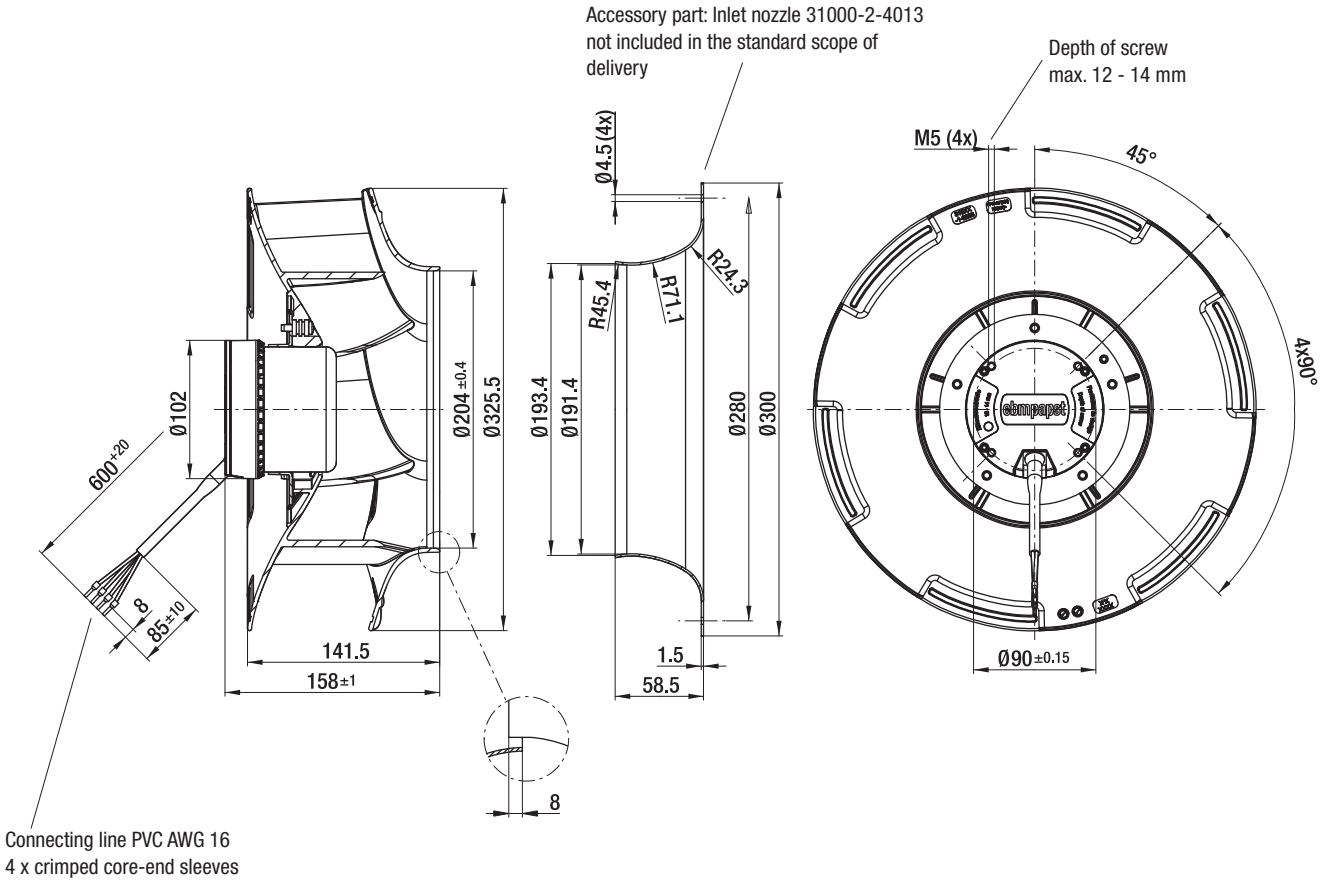

max. 155 m³/h

# DC-Querstromlüfter

## Series QG 030 201...413 x 50 x 48 mm

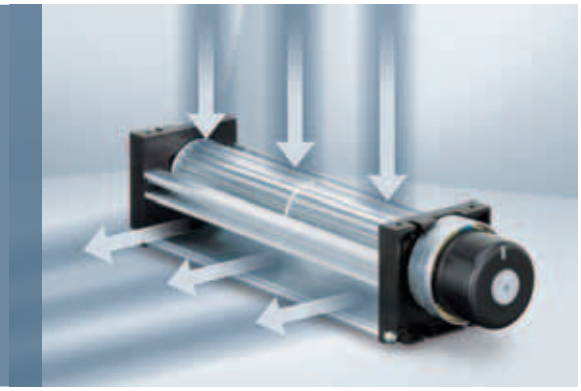

- **Material:** Housing: Aluminium
  Housing side parts: Plastic
  Impeller: Aluminium
- **Direction of air flow:** See photo
- **Connection:** Via single wires AWG 24, TR 64
- **Highlights:** Motor with ball bearing system
  Impeller retaining plate with plain bearing
- **Mass:** 235 / 290 / 380 / 415 g

- **Possible special versions:**
  (See chapter DC fans - specials)
  - Speed signal
  - Protection against moisture

| Nominal data | Air flow | Air flow | Nominal voltage | Voltage range | Sound power level | Sintec sleeve bearings Ball bearings | Input power | Nominal speed | Temperature range | Service life $L_{10}$ (40 °C) ebm-papst Standard / Service life $L_{10}$ ($T_{max}$) ebm-papst Standard | Life expectancy $L_{10IPC}$ (40 °C) see page 17 | Curve |
|---|---|---|---|---|---|---|---|---|---|---|---|---|
| **Type** | **m³/h** | **CFM** | **VDC** | **VDC** | **db(A)** | **Bel(A)** | **□/■** | **Watts** | **°C** | **Hours** | **Hours** | |
| QG 030-148/12 | 75 | 44 | **12** | 8...14 | 49 | 5,7 | □/■ | 6,2 | -20...+60 | 30 000 / 20 000 | 50 000 | ① |
| QG 030-198/12 | 100 | 59 | **12** | 8...14 | 51 | 5,8 | □/■ | 8,0 | -20...+60 | 30 000 / 20 000 | 50 000 | ② |
| QG 030-303/12 | 140 | 82 | **12** | 8...14 | 51 | 5,8 | □/■ | 8,7 | -20...+60 | 30 000 / 20 000 | 50 000 | ③ |
| QG 030-353/12 | 155 | 91 | **12** | 8...14 | 51 | 5,9 | □/■ | 9,6 | -20...+60 | 30 000 / 20 000 | 50 000 | ④ |
| QG 030-148/14 | 75 | 44 | **24** | 16...28 | 49 | 5,7 | □/■ | 6,2 | -20...+60 | 30 000 / 20 000 | 50 000 | ① |
| QG 030-198/14 | 100 | 59 | **24** | 16...28 | 51 | 5,8 | □/■ | 8,0 | -20...+60 | 30 000 / 20 000 | 50 000 | ② |
| QG 030-303/14 | 140 | 82 | **24** | 16...28 | 51 | 5,8 | □/■ | 8,7 | -20...+60 | 30 000 / 20 000 | 50 000 | ③ |
| QG 030-353/14 | 155 | 91 | **24** | 16...28 | 51 | 5,9 | □/■ | 9,6 | -20...+60 | 30 000 / 20 000 | 50 000 | ④ |

Subject to alternations

The values for service life were recorded with the fan installed horizontally.

| Type Dimension: | L | $L_1$ | Mass |
|---|---|---|---|
| **QG 030-148/ ..** | 203,4 $^{+1,5}$ | 148 | 235 g |
| **QG 030-198/ ..** | 260,4 $^{+1,5}$ | 198 | 290 g |
| **QG 030-303/ ..** | 365,4 $^{+1,5}$ | 303 | 380 g |
| **QG 030-353/ ..** | 415,4 $^{+1,5}$ | 353 | 415 g |

------ Tangential fans are only suitable for operation with high rate and low back pressure.

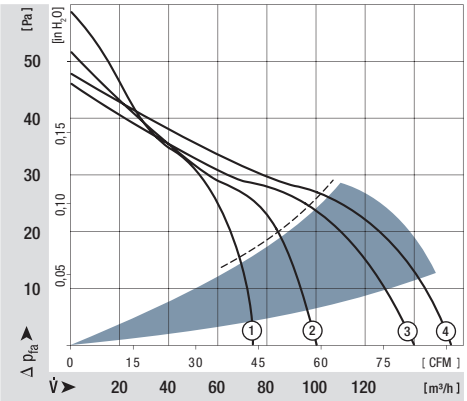


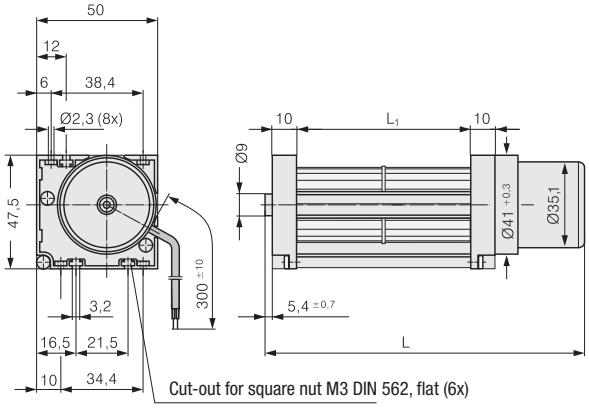




ebmpapst

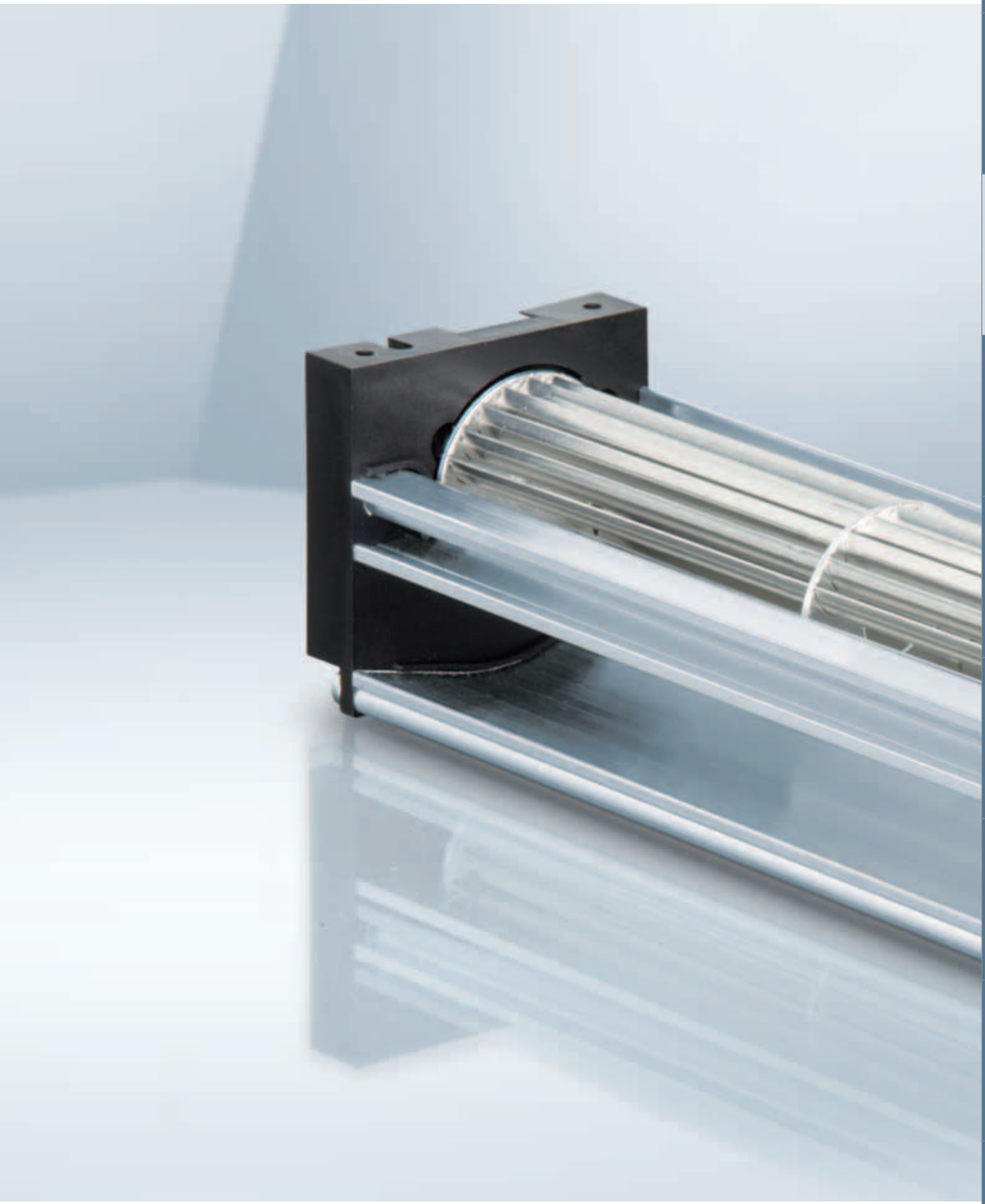

max. 95 m³/h

# DC centrifugal fans and blowers

## Ø 85 mm

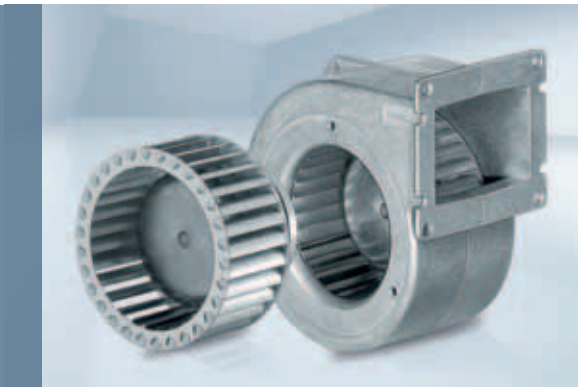

- **Material:** Housing: Die-cast aluminium
  Impeller: Hot-dip galvanised sheet steel
  Rotor: Galvanised
- **Direction of rotation:** Clockwise, seen on rotor
- **Type of protection:** IP 22
- **Insulation class:** "B"
- **Mounting position:** Any
- **Condensate discharges:** None
- **Operation mode:** Continuous operation (S1)
- **Bearings:** Maintenance-free ball bearings

| Nominal data | | Curve | Nominal voltage | Voltage range | Air flow | Speed / rpm | Input power | Current draw | Sound power level | Min. back-pressure | Perm. amb. temp. | Technical features and electrical connections |
|---|---|---|---|---|---|---|---|---|---|---|---|---|
| **Type** | **Motor** | | **VDC** | **VDC** | **m³/h** | **rpm** | **W** | **A** | **dB(A)** | **Pa** | **°C** | |
| ***1G 085** | M1G 045-BE | A | 24 | 16-28 | 95 | 2850 | 14 | 0,64 | 57 | 0 | -25...+60 | p. 255 / G) |
| ***1G 085** | M1G 045-BE | A | 48 | 36-57 | 95 | 2850 | 14 | 0,32 | 57 | 0 | -25...+60 | p. 255 / G) |

Subject to alternations

**Curve:**

$U_N$ = nominal voltage (24 V /48 V)

$U_R$ = overvoltage (28 V / 57 V)

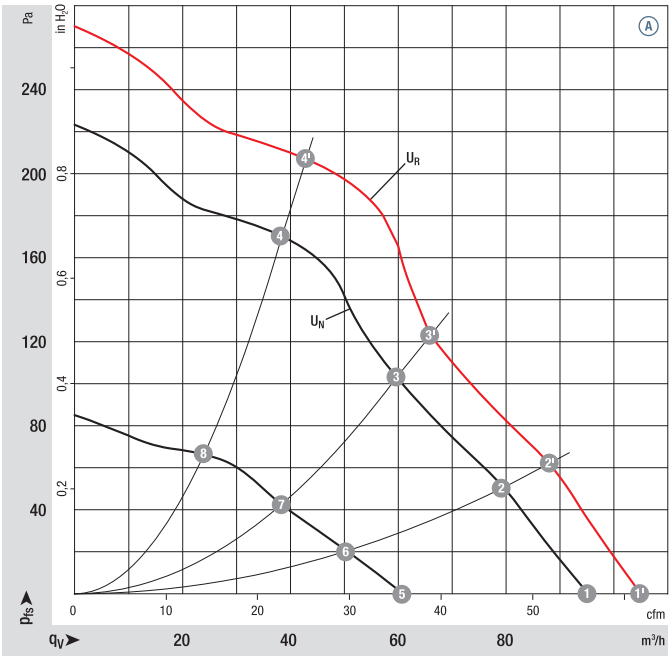


| | n rpm | $P_{ed}$ W | $Lp_A$ dB(A) | $\eta_{tL}$ % |
|---|---|---|---|---|
| A 1' | 3180 | 19 | 59 | — |
| A 2' | 3300 | 16 | 57 | 28 |
| A 3' | 3500 | 15 | 57 | 32 |
| A 4' | 3800 | 12 | 57 | 37 |
| A 1 | 2850 | 14 | 57 | — |
| A 2 | 3000 | 12 | 55 | 28 |
| A 3 | 3180 | 11 | 55 | 32 |
| A 4 | 3400 | 9 | 54 | 37 |
| A 5 | 1890 | 5 | 46 | — |
| A 6 | 1970 | 4 | 44 | 25 |
| A 7 | 2070 | 4 | 44 | 30 |
| A 8 | 2170 | 3 | 42 | 33 |

Air performance measured as per: ISO 5801, Installation category A, with ebm-papst inlet nozzle without protection against accidental contact. Suction-side noise levels: LWA as per ISO 13347, LpA measured at 1 m distance to fan axis. The acoustic values given are only valid under the measurment conditions listed and may vary depending on the installation situation. With any deviation to the standard setup, the specific values have to be checked and reviewed once installed or fitted!
For detailed information see http://www.ebmpapst.com/general conditions



ebmpapst

- **Technical features:** See electrical connections p. 255
- **Cable exit:** Axial
- **Protection class:** I
- **Product conforming to standards:** EN 60950-1
- **Approvals:** Ⓐ (48 VDC) CCC

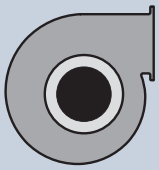

| Centrifugal fans | Mass centrifugal fans kg | Centrifugal blowers with flange | Mass centrifugal blowers kg |
|---|---|---|---|
| **R1G 085-AB05 -01** | 0,5 | **G1G 085-AB05 -01** | 0,8 |
| **R1G 085-AB07 -01** | 0,5 | **G1G 085-AB07 -01** | 0,8 |

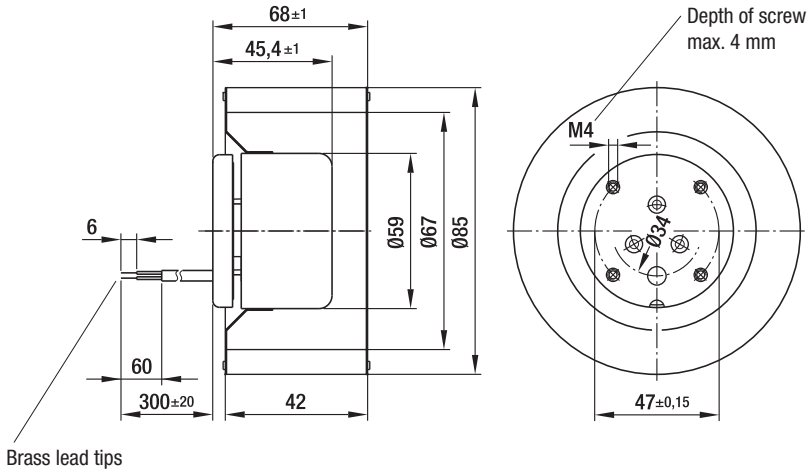


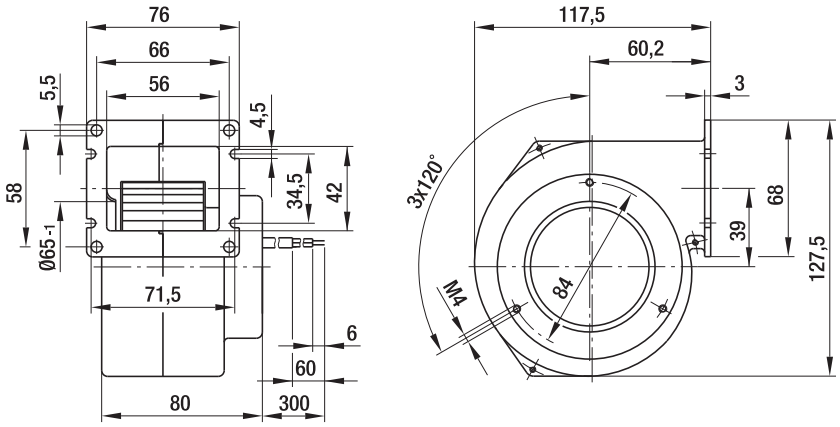

max. 95 m³/h

# DC centrifugal fans and blowers

## Ø 97 mm

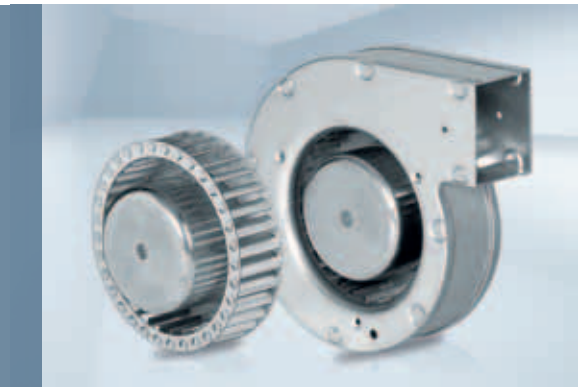

- **Material:** Housing: Hot-dip galvanised sheet steel
  Impeller: Hot-dip galvanised sheet steel
  Rotor: Galvanised
- **Direction of rotation:** Clockwise, seen on rotor
- **Type of protection:** IP 22
- **Insulation class:** "B"
- **Mounting position:** Any
- **Condensate discharges:** None
- **Operation mode:** Continuous operation (S1)
- **Bearings:** Maintenance-free ball bearings

| Nominal data | | Curve | Nominal voltage | Voltage range | Air flow | Speed / rpm | Input power | Current draw | Sound power level | Min. back-pressure | Perm. amb. temp. | Technical features and electrical connections |
|---|---|---|---|---|---|---|---|---|---|---|---|---|
| **Type** | **Motor** | | **VDC** | **VDC** | **m³/h** | **rpm** | **W** | **A** | **dB(A)** | **Pa** | **°C** | |
| ***1G 097** | M1G 045-BE | A | 24 | 16-28 | 95 | 2650 | 16 | 0,75 | 59 | 0 | -25...+60 | p. 255 / G) |
| ***1G 097** | M1G 045-BE | A | 48 | 36-57 | 95 | 2650 | 16 | 0,38 | 59 | 0 | -25...+60 | p. 255 / G) |

Subject to alternations

**Curve:**

$U_N$ = nominal voltage (24 V /48 V)

$U_R$ = overvoltage (28 V / 57 V)

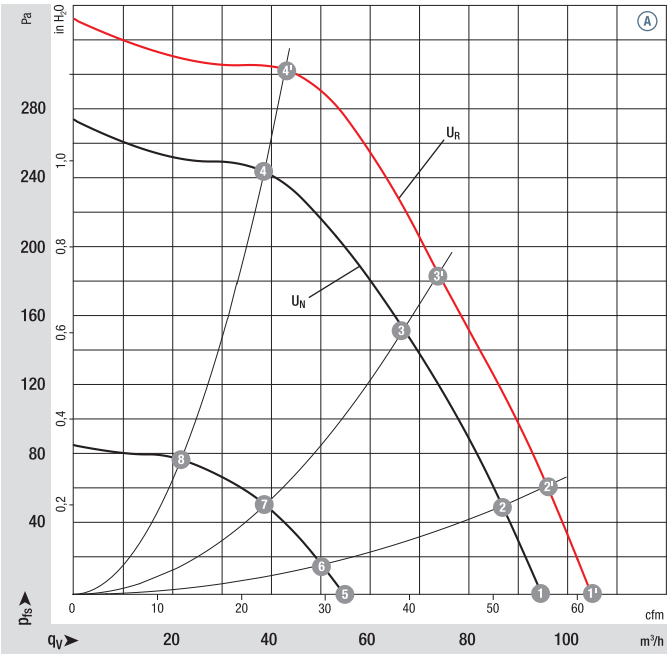


| | | n rpm | $P_{ed}$ W | $Lp_A$ dB(A) | $\eta_{tL}$ % |
|---|---|---|---|---|---|
| A | 1' | 2920 | 22 | 62 | — |
| A | 2' | 3030 | 21 | 61 | 41 |
| A | 3' | 3300 | 17 | 59 | 48 |
| A | 4' | 3700 | 13 | 58 | 48 |
| A | 1 | 2650 | 16 | 59 | — |
| A | 2 | 2730 | 15 | 58 | 41 |
| A | 3 | 2960 | 13 | 56 | 48 |
| A | 4 | 3290 | 10 | 55 | 48 |
| A | 5 | 1615 | 4 | 45 | — |
| A | 6 | 1650 | 4 | 45 | 38 |
| A | 7 | 1745 | 4 | 43 | 46 |
| A | 8 | 1880 | 3 | 42 | 47 |

Air performance measured as per: ISO 5801, Installation category A, with ebm-papst inlet nozzle without protection against accidental contact. Suction-side noise levels: LWA as per ISO 13347, LpA measured at 1 m distance to fan axis. The acoustic values given are only valid under the measurment conditions listed and may vary depending on the installation situation. With any deviation to the standard setup, the specific values have to be checked and reviewed once installed or fitted!
For detailed information see http://www.ebmpapst.com/general conditions



ebmpapst

- **Technical features:** See electrical connections p. 255
- **Cable exit:** Axial
- **Protection class:** I
- **Product conforming to standards:** EN 60950-1
- **Approvals:** Ⓐ (48 VDC) CCC

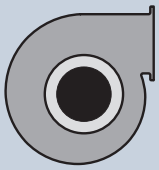

| Centrifugal fans | Mass centrifugal fans kg | Centrifugal blowers with flange | Mass centrifugal blowers kg |
|---|---|---|---|
| **R1G 097-AA05 -01** | 0,5 | **G1G 097-AA05 -01** | 0,8 |
| **R1G 097-AA07 -01** | 0,5 | **G1G 097-AA07 -01** | 0,8 |

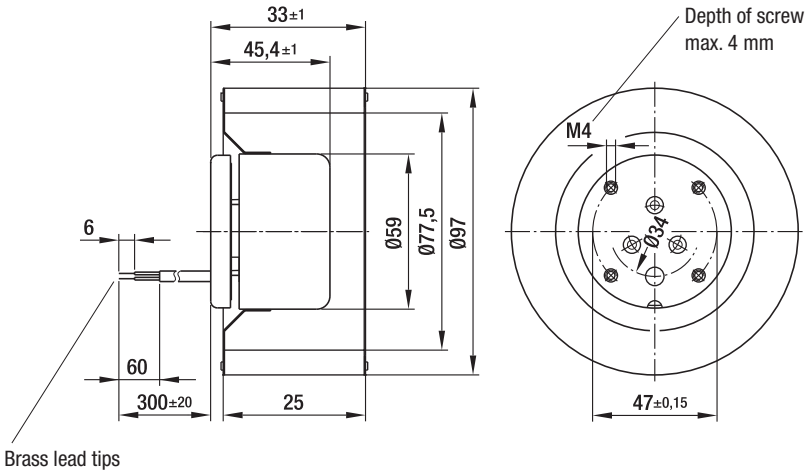


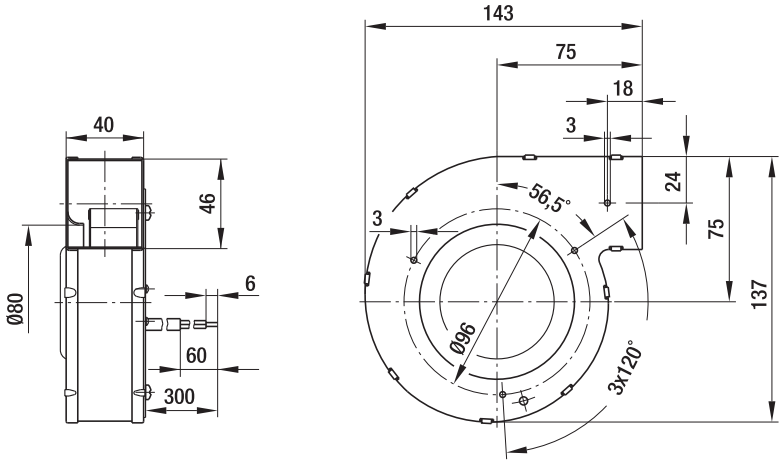

max. 200 m³/h

# DC centrifugal fans and blowers

## Ø 108 mm

- **Material:** Housing: Die-cast aluminium
  Impeller: Hot-dip galvanised sheet steel
  Rotor: Galvanised
- **Direction of rotation:** Clockwise, seen on rotor
- **Type of protection:** IP 22
- **Insulation class:** "B"
- **Mounting position:** Any
- **Condensate discharges:** None
- **Operation mode:** Continuous operation (S1)
- **Bearings:** Maintenance-free ball bearings

| Nominal data | | Curve | Nominal voltage | Voltage range | Air flow | Speed / rpm | Input power | Current draw | Sound power level | Min. back-pressure | Perm. amb. temp. | Technical features and electrical connections |
|---|---|---|---|---|---|---|---|---|---|---|---|---|
| **Type** | **Motor** | | **VDC** | **VDC** | **m³/h** | **rpm** | **W** | **A** | **dB(A)** | **Pa** | **°C** | |
| ***1G 108** | M1G 055-BD | A | 24 | 16-28 | 200 | 3000 | 42 | 2,00 | 65 | 0 | -25...+60 | p. 255 / G) |
| ***1G 108** | M1G 055-BD | A | 48 | 36-57 | 200 | 3000 | 42 | 1,00 | 65 | 0 | -25...+60 | p. 255 / G) |

Subject to alternations

**Curve:**

$U_N$ = nominal voltage (24 V /48 V)

$U_R$ = overvoltage (28 V / 57 V)

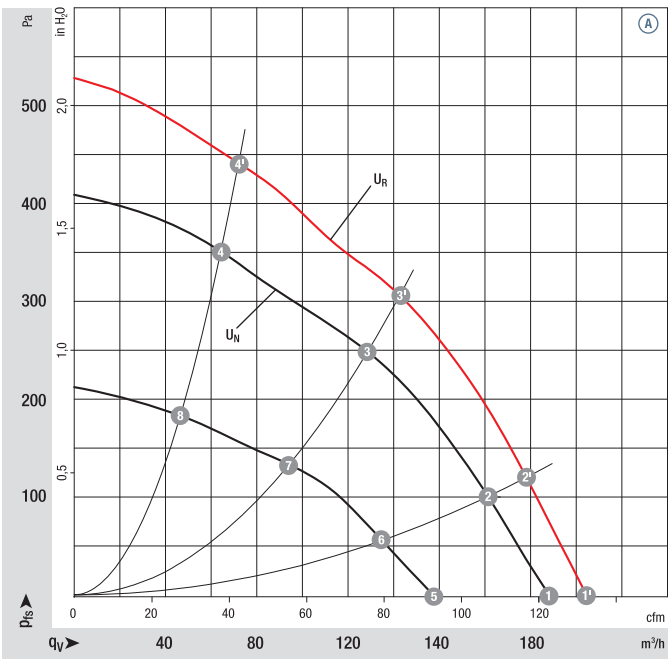


| | | n rpm | $P_{ed}$ W | $Lp_A$ dB(A) | $\eta_{tL}$ % |
|---|---|---|---|---|---|
| A | 1' | 3230 | 55 | 67 | — |
| A | 2' | 3410 | 52 | 66 | 33 |
| A | 3' | 3800 | 43 | 65 | 41 |
| A | 4' | 4100 | 35 | 64 | 33 |
| A | 1 | 3000 | 42 | 65 | — |
| A | 2 | 3140 | 40 | 64 | 33 |
| A | 3 | 3420 | 32 | 63 | 41 |
| A | 4 | 3690 | 26 | 63 | 33 |
| A | 5 | 2300 | 20 | 61 | — |
| A | 6 | 2380 | 17 | 58 | 33 |
| A | 7 | 2550 | 14 | 55 | 41 |
| A | 8 | 2720 | 11 | 55 | 33 |

Air performance measured as per: ISO 5801, Installation category A, with ebm-papst inlet nozzle without protection against accidental contact. Suction-side noise levels: LWA as per ISO 13347, LpA measured at 1 m distance to fan axis. The acoustic values given are only valid under the measurment conditions listed and may vary depending on the installation situation. With any deviation to the standard setup, the specific values have to be checked and reviewed once installed or fitted!
For detailed information see http://www.ebmpapst.com/general conditions



ebmpapst

- **Technical features:** See electrical connections p. 255
- **EMC:** Interference emission acc. to EN 61000-6-3
  Interference immunity acc. to EN 61000-6-2
- **Cable exit:** Axial
- **Protection class:** I
- **Product conforming to standards:** EN 60950-1
- **Approvals:** Ⓐ (24 VDC) UL, CSA, Ⓐ (48 VDC) CCC

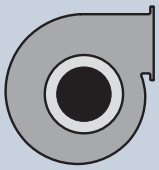

| Centrifugal fans | Mass centrifugal fans kg | Centrifugal blowers with flange | Mass centrifugal blowers kg |
|---|---|---|---|
| **R1G 108-AB17 -02** | 0,7 | **G1G 108-AB17 -02** | 1,4 |
| **R1G 108-AB41 -02** | 0,7 | **G1G 108-AB41 -02** | 1,4 |

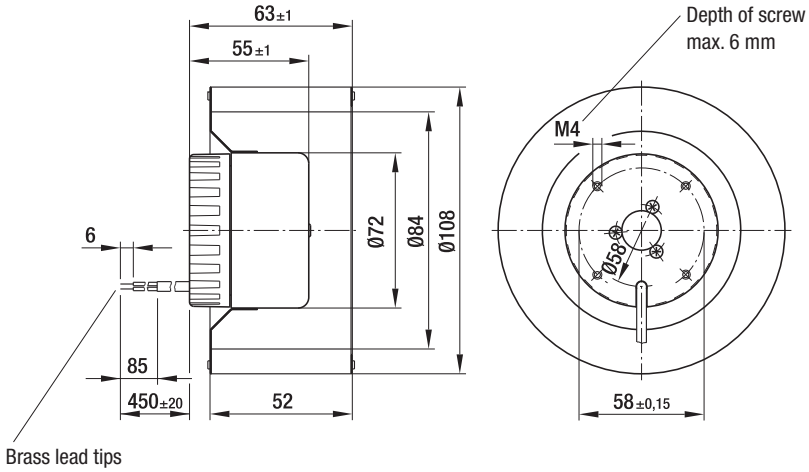


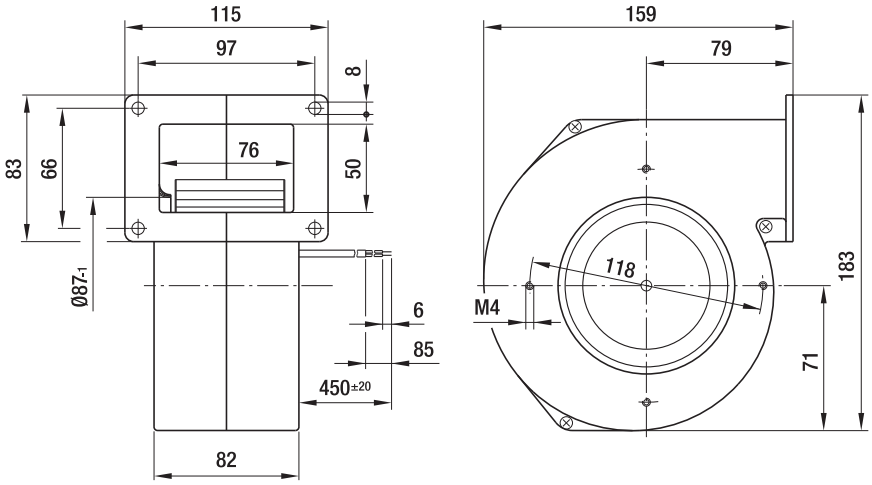

max. 255 m³/h

# DC centrifugal fans and blowers

## Ø 120 mm

- **Material:** Housing: Die-cast aluminium
  Impeller: Hot-dip galvanised sheet steel
  Rotor: Galvanised
- **Direction of rotation:** Clockwise, seen on rotor
- **Type of protection:** IP 22
- **Insulation class:** "B"
- **Mounting position:** Any
- **Condensate discharges:** None
- **Operation mode:** Continuous operation (S1)
- **Bearings:** Maintenance-free ball bearings

| Nominal data | | Curve | Nominal voltage | Voltage range | Air flow | Speed / rpm | Input power | Current draw | Sound power level | Min. back-pressure | Perm. amb. temp. | Technical features and electrical connections |
|---|---|---|---|---|---|---|---|---|---|---|---|---|
| **Type** | **Motor** | | **VDC** | **VDC** | **m³/h** | **rpm** | **W** | **A** | **dB(A)** | **Pa** | **°C** | |
| ***1G 120** | M1G 055-BD | Ⓐ | 24 | 16-28 | 255 | 2200 | 40 | 1,90 | 62 | 0 | -25...+60 | p. 255 / G) |
| ***1G 120** | M1G 055-BD | Ⓐ | 48 | 36-57 | 255 | 2200 | 40 | 0,95 | 62 | 0 | -25...+60 | p. 255 / G) |

Subject to alternations

**Curve:**

$U_N$ = nominal voltage (24 V /48 V)

$U_R$ = overvoltage (28 V / 57 V)

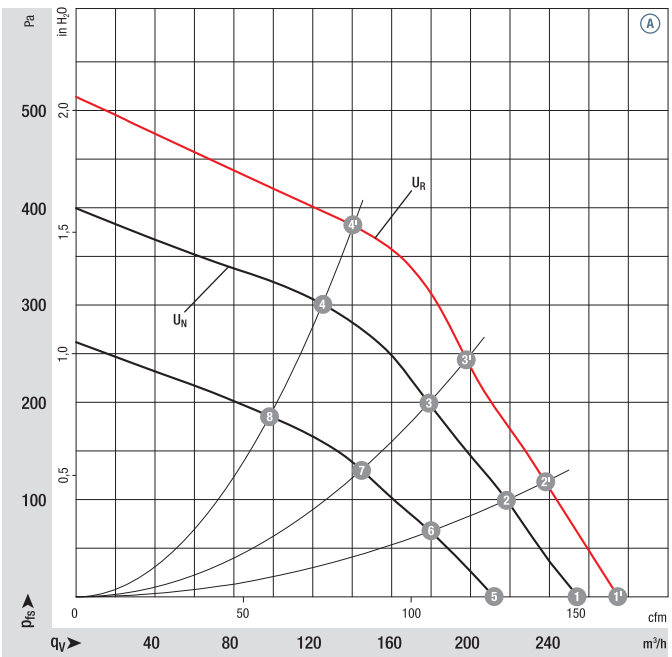


| | | n rpm | $P_{ed}$ W | $Lp_A$ dB(A) | $\eta_{tL}$ % |
|---|---|---|---|---|---|
| Ⓐ | 1' | 2410 | 50 | 63 | — |
| Ⓐ | 2' | 2620 | 47 | 62 | 58 |
| Ⓐ | 3' | 2870 | 44 | 61 | 60 |
| Ⓐ | 4' | 3200 | 36 | 62 | 55 |
| Ⓐ | 1 | 2200 | 40 | 62 | — |
| Ⓐ | 2 | 2410 | 36 | 60 | 59 |
| Ⓐ | 3 | 2600 | 32 | 58 | 62 |
| Ⓐ | 4 | 2880 | 25 | 58 | 55 |
| Ⓐ | 5 | 1870 | 24 | 55 | — |
| Ⓐ | 6 | 1990 | 21 | 54 | 58 |
| Ⓐ | 7 | 2100 | 18 | 53 | 61 |
| Ⓐ | 8 | 2310 | 14 | 54 | 54 |

Air performance measured as per: ISO 5801, Installation category A, with ebm-papst inlet nozzle without protection against accidental contact. Suction-side noise levels: LWA as per ISO 13347, LpA measured at 1 m distance to fan axis. The acoustic values given are only valid under the measurment conditions listed and may vary depending on the installation situation. With any deviation to the standard setup, the specific values have to be checked and reviewed once installed or fitted!
For detailed information see http://www.ebmpapst.com/general conditions



ebmpapst

- **Technical features:** See electrical connections p. 255
- **EMC:** Interference emission acc. to EN 61000-6-3
  Interference immunity acc. to EN 61000-6-2
- **Cable exit:** Axial
- **Protection class:** I
- **Product conforming to standards:** EN 60950-1
- **Approvals:** Ⓐ (24 VDC) UL, CSA, Ⓐ (48 VDC) CCC

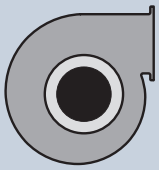

| Centrifugal fans | Mass centrifugal fans kg | Centrifugal blowers with flange | Mass centrifugal blowers kg |
|---|---|---|---|
| **R1G 120-AB67 -02** | 0,8 | **G1G 120-AB67 -02** | 1,6 |
| **R1G 120-AB71 -02** | 0,8 | **G1G 120-AB71 -02** | 1,6 |

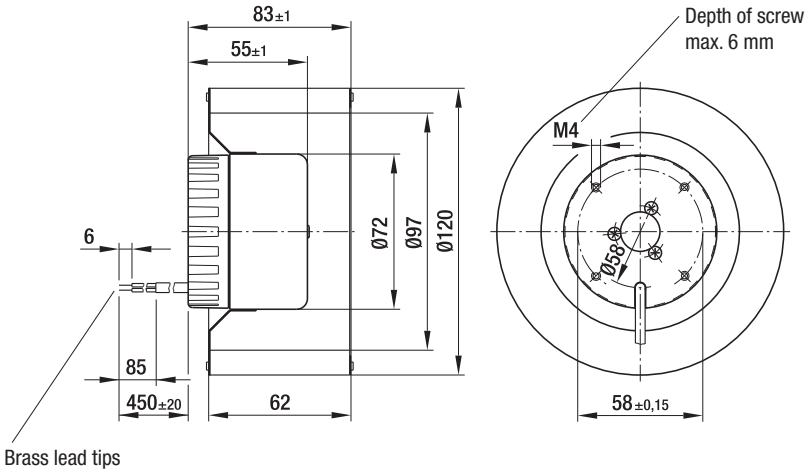


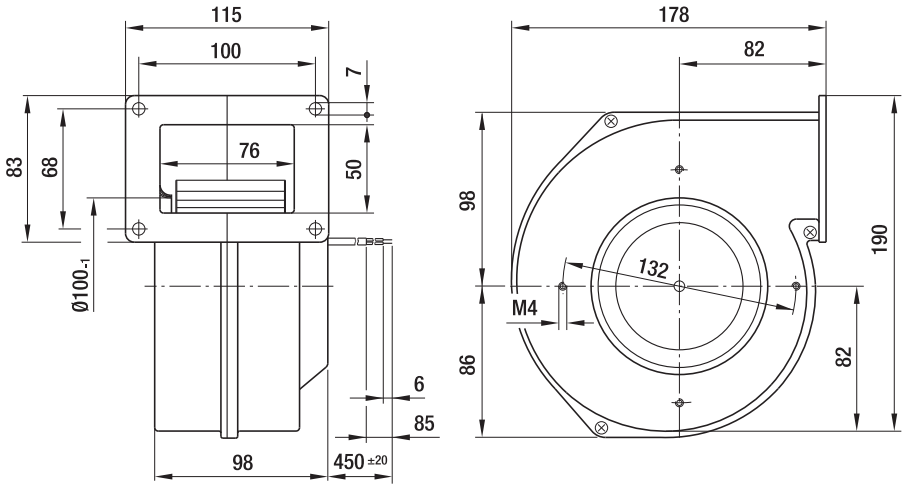

max. 225 m³/h

# DC centrifugal fans and blowers

## Ø 133 mm

- **Material:** Housing: Die-cast aluminium
  Impeller: Hot-dip galvanised sheet steel
  Rotor: Galvanised
- **Direction of rotation:** Clockwise, seen on rotor
- **Type of protection:** IP 22
- **Insulation class:** "B"
- **Mounting position:** Any
- **Condensate discharges:** None
- **Operation mode:** Continuous operation (S1)
- **Bearings:** Maintenance-free ball bearings

| Nominal data | | Curve | Nominal voltage | Voltage range | Air flow | Speed / rpm | Input power | Current draw | Sound power level | Min. back-pressure | Perm. amb. temp. | Technical features and electrical connections |
|---|---|---|---|---|---|---|---|---|---|---|---|---|
| **Type** | **Motor** | | **VDC** | **VDC** | **m³/h** | **rpm** | **W** | **A** | **dB(A)** | **Pa** | **°C** | |
| ***1G 133** | M1G 055-BD | A | 24 | 16-28 | 225 | 2000 | 40 | 2,20 | 64 | 0 | -25...+60 | p. 255 / G) |
| ***1G 133** | M1G 055-BD | A | 48 | 36-57 | 225 | 2000 | 40 | 1,10 | 64 | 0 | -25...+60 | p. 255 / G) |

Subject to alternations

**Curve:**

$U_N$ = nominal voltage (24 V /48 V)

$U_R$ = overvoltage (28 V / 57 V)

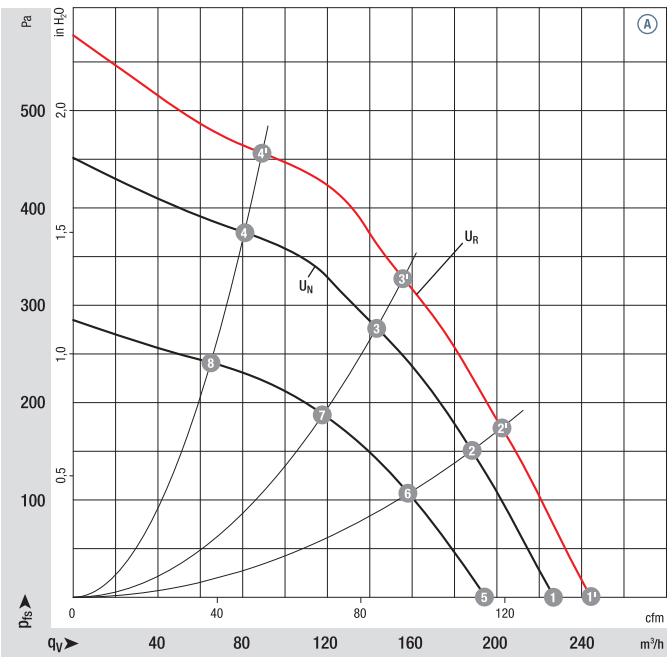


| | n rpm | $P_{ed}$ W | $Lp_A$ dB(A) | $\eta_{tL}$ % |
|---|---|---|---|---|
| A 1' | 2170 | 57 | 66 | — |
| A 2' | 2410 | 51 | 66 | 47 |
| A 3' | 2750 | 44 | 64 | 49 |
| A 4' | 3200 | 36 | 66 | 32 |
| A 1 | 2000 | 45 | 64 | — |
| A 2 | 2230 | 40 | 64 | 49 |
| A 3 | 2540 | 35 | 62 | 51 |
| A 4 | 2920 | 27 | 63 | 33 |
| A 5 | 1750 | 28 | 60 | — |
| A 6 | 1910 | 24 | 59 | 50 |
| A 7 | 2120 | 20 | 58 | 53 |
| A 8 | 2370 | 15 | 59 | 35 |

Air performance measured as per: ISO 5801, Installation category A, with ebm-papst inlet nozzle without protection against accidental contact. Suction-side noise levels: LWA as per ISO 13347, LpA measured at 1 m distance to fan axis. The acoustic values given are only valid under the measurment conditions listed and may vary depending on the installation situation. With any deviation to the standard setup, the specific values have to be checked and reviewed once installed or fitted!
For detailed information see http://www.ebmpapst.com/general conditions



ebmpapst

- **Technical features:** See electrical connections p. 255
- **EMC:** Interference emission acc. to EN 61000-6-3
  Interference immunity acc. to EN 61000-6-2
- **Cable exit:** Lateral
- **Protection class:** I
- **Product conforming to standards:** EN 60950-1
- **Approvals:** Ⓐ (24 VDC) UL, CSA, Ⓐ (48 VDC) CCC

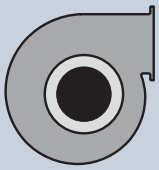

| Centrifugal fans | Mass centrifugal fans kg | Centrifugal blowers with flange | Mass centrifugal blowers kg |
|---|---|---|---|
| **R1G 133-AE19 -02** | 0,7 | **G1G 133-DE19 -02** | 1,3 |
| **R1G 133-AE03 -02** | 0,7 | **G1G 133-DE03 -02** | 1,3 |

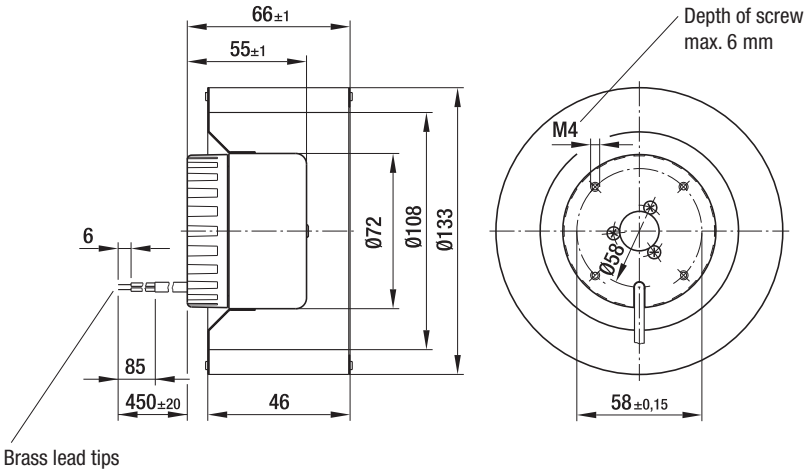


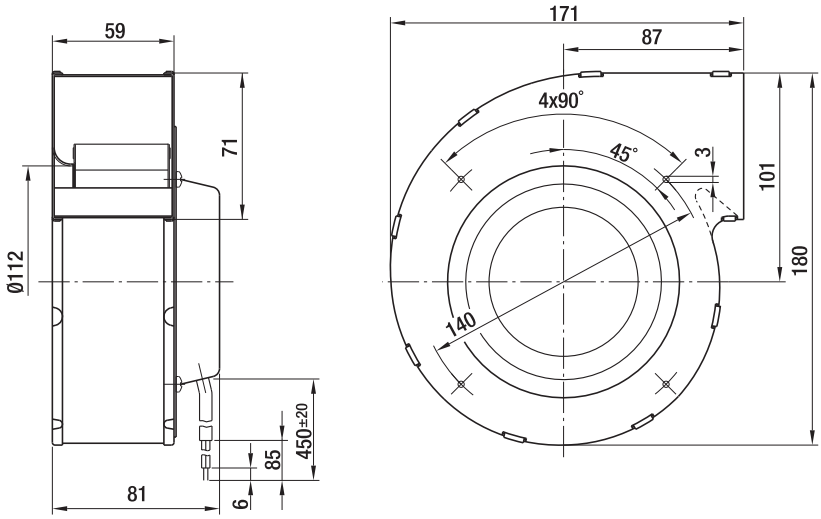

max. 410 m³/h

# DC centrifugal fans and blowers

## Ø 140 mm

- **Material:** Housing: Die-cast aluminium
  Impeller: Hot-dip galvanised sheet steel
  Rotor: Galvanised
- **Direction of rotation:** Clockwise, seen on rotor
- **Type of protection:** IP 22
- **Insulation class:** "B"
- **Mounting position:** Any
- **Condensate discharges:** None
- **Operation mode:** Continuous operation (S1)
- **Bearings:** Maintenance-free ball bearings

| Nominal data | | Curve | Nominal voltage | Voltage range | Air flow | Speed / rpm | Input power | Current draw | Sound power level | Min. back-pressure | Perm. amb. temp. | Technical features and electrical connections |
|---|---|---|---|---|---|---|---|---|---|---|---|---|
| **Type** | **Motor** | | **VDC** | **VDC** | **m³/h** | **rpm** | **W** | **A** | **dB(A)** | **Pa** | **°C** | |
| ***1G 140** | M1G 055-BD | Ⓐ | 24 | 16-28 | 400 | 1750 | 54 | 2,50 | 63 | 0 | -25...+60 | p. 255 / G) |
| ***1G 140** | M1G 055-BD | Ⓐ | 48 | 36-57 | 410 | 1750 | 54 | 1,30 | 63 | 0 | -25...+60 | p. 255 / G) |

Subject to alternations

**Curve:**

$U_N$ = nominal voltage (24 V /48 V)

$U_R$ = overvoltage (28 V / 57 V)

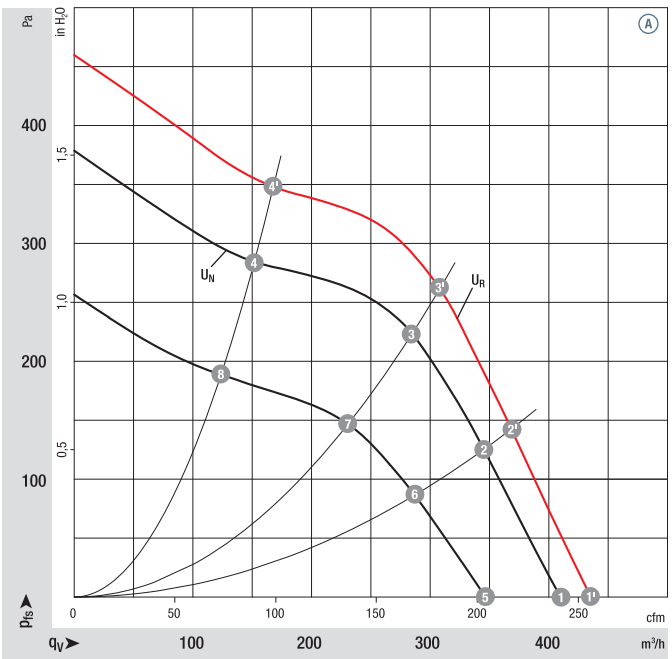


| | | n rpm | $P_{ed}$ W | $Lp_A$ dB(A) | $\eta_{tL}$ % |
|---|---|---|---|---|---|
| Ⓐ | 1' | 1850 | 65 | 64 | — |
| Ⓐ | 2' | 2020 | 61 | 61 | 50 |
| Ⓐ | 3' | 2200 | 57 | 59 | 54 |
| Ⓐ | 4' | 2550 | 43 | 60 | 40 |
| Ⓐ | 1 | 1750 | 54 | 63 | — |
| Ⓐ | 2 | 1900 | 50 | 59 | 51 |
| Ⓐ | 3 | 2030 | 45 | 58 | 54 |
| Ⓐ | 4 | 2310 | 32 | 58 | 40 |
| Ⓐ | 5 | 1500 | 34 | 60 | — |
| Ⓐ | 6 | 1580 | 29 | 56 | 50 |
| Ⓐ | 7 | 1670 | 25 | 54 | 53 |
| Ⓐ | 8 | 1880 | 19 | 53 | 41 |

Air performance measured as per: ISO 5801, Installation category A, with ebm-papst inlet nozzle without protection against accidental contact. Suction-side noise levels: LWA as per ISO 13347, LpA measured at 1 m distance to fan axis. The acoustic values given are only valid under the measurment conditions listed and may vary depending on the installation situation. With any deviation to the standard setup, the specific values have to be checked and reviewed once installed or fitted!
For detailed information see http://www.ebmpapst.com/general conditions



ebmpapst

- **Technical features:** See electrical connections p. 255
- **EMC:** Interference emission acc. to EN 61000-6-3
  Interference immunity acc. to EN 61000-6-2
- **Cable exit:** Axial
- **Protection class:** I
- **Product conforming to standards:** EN 60950-1
- **Approvals:** Ⓐ (48 VDC) CCC

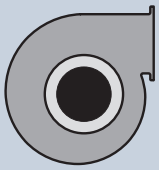

| Centrifugal fans | Mass centrifugal fans kg | Centrifugal blowers with flange | Mass centrifugal blowers kg |
|---|---|---|---|
| **R1G 140-AV17 -02** | 1,0 | **G1G 140-AV17 -02** | 2,3 |
| **R1G 140-AV21 -02** | 1,0 | **G1G 140-AV21 -02** | 2,3 |

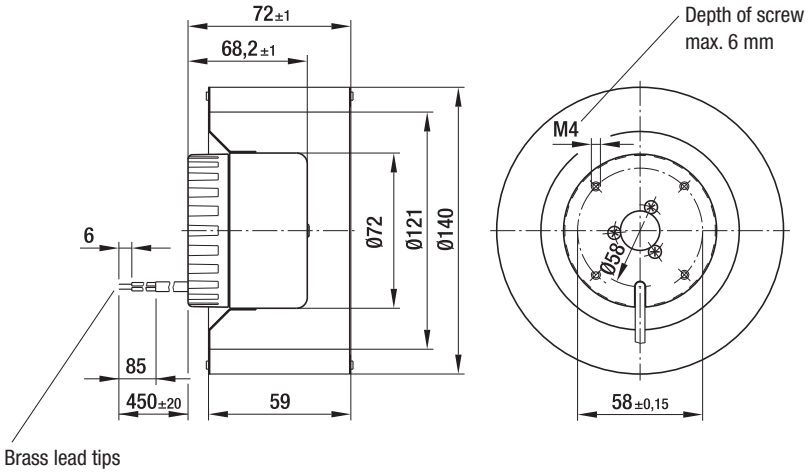


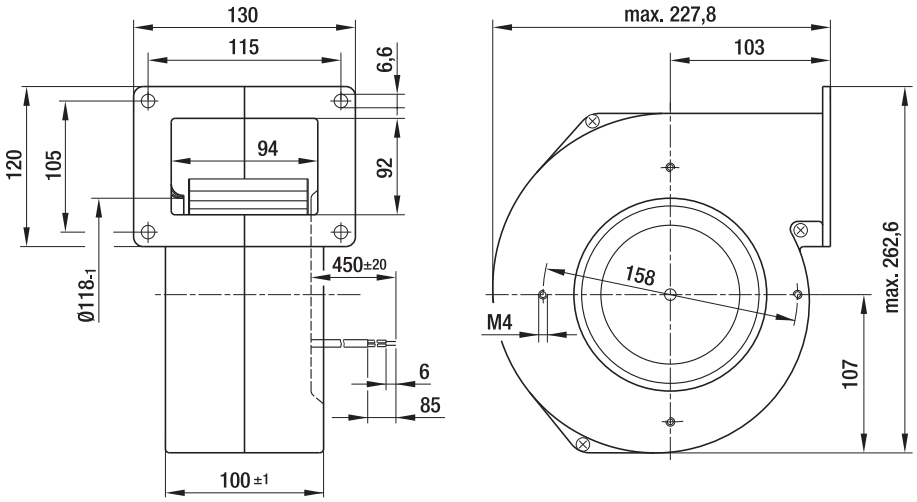

max. 470 m³/h

# DC centrifugal fans and blowers

## Ø 146 mm

- **Material:** Housing: Die-cast aluminium
  Impeller: Hot-dip galvanised sheet steel
  Rotor: Galvanised
- **Direction of rotation:** Clockwise, seen on rotor
- **Type of protection:** IP 42
- **Insulation class:** "B"
- **Mounting position:** Any
- **Condensate discharges:** None
- **Operation mode:** Continuous operation (S1)
- **Bearings:** Maintenance-free ball bearings

| Nominal data | | Curve | Nominal voltage | Voltage range | Air flow | Speed / rpm | Input power | Current draw | Sound power level | Min. back-pressure | Perm. amb. temp. | Technical features and electrical connections |
|---|---|---|---|---|---|---|---|---|---|---|---|---|
| **Type** | **Motor** | | **VDC** | **VDC** | **m³/h** | **rpm** | **W** | **A** | **dB(A)** | **Pa** | **°C** | |
| ***1G 146** | M1G 074-BF | A | 24 | 16-28 | 470 | 2200 | 100 | 5,00 | 68 | 0 | -25...+60 | p. 255 / G) |
| ***1G 146** | M1G 074-BF | A | 48 | 36-57 | 465 | 2150 | 100 | 2,60 | 67 | 0 | -25...+60 | p. 255 / G) |

Subject to alternations

**Curve:**

$U_N$ = nominal voltage (24 V /48 V)

$U_R$ = overvoltage (28 V / 57 V)

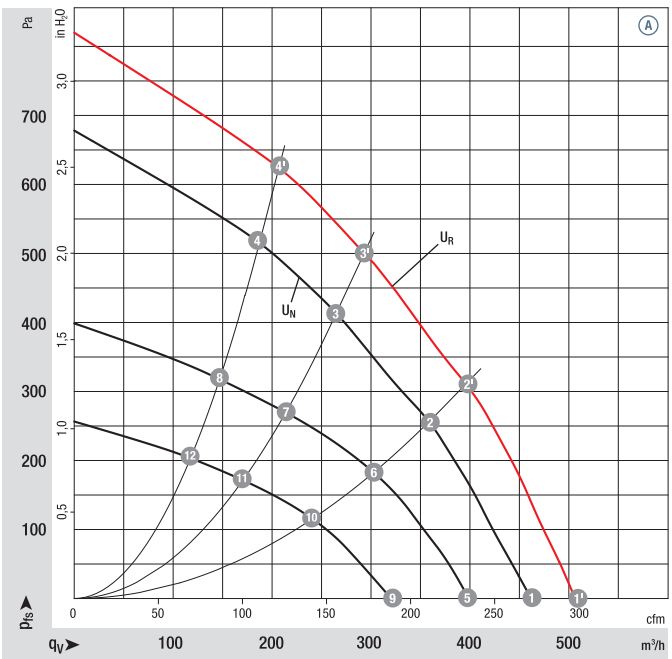


| | | n rpm | $P_{ed}$ W | $Lp_A$ dB(A) | $\eta_{tL}$ % |
|---|---|---|---|---|---|
| A | 1' | 2400 | 140 | 70 | — |
| A | 2' | 2650 | 130 | 67 | 45 |
| A | 3' | 3000 | 110 | 66 | 49 |
| A | 4' | 3300 | 100 | 67 | 45 |
| A | 1 | 2200 | 100 | 68 | — |
| A | 2 | 2445 | 90 | 65 | 46 |
| A | 3 | 2750 | 84 | 64 | 49 |
| A | 4 | 3025 | 77 | 65 | 45 |
| A | 5 | 1890 | 68 | 63 | — |
| A | 6 | 2075 | 57 | 60 | 46 |
| A | 7 | 2250 | 48 | 61 | 49 |
| A | 8 | 2335 | 41 | 61 | 45 |
| A | 9 | 1520 | 37 | 59 | — |
| A | 10 | 1670 | 32 | 55 | 46 |
| A | 11 | 1815 | 27 | 55 | 49 |
| A | 12 | 1920 | 23 | 55 | 45 |

Air performance measured as per: ISO 5801, Installation category A, with ebm-papst inlet nozzle without protection against accidental contact. Suction-side noise levels: LWA as per ISO 13347, LpA measured at 1 m distance to fan axis. The acoustic values given are only valid under the measurment conditions listed and may vary depending on the installation situation. With any deviation to the standard setup, the specific values have to be checked and reviewed once installed or fitted!
For detailed information see http://www.ebmpapst.com/general conditions



ebmpapst

- **Technical features:** See electrical connections p. 255
- **EMC:** Interference emission acc. to EN 61000-6-3
  Interference immunity acc. to EN 61000-6-2
- **Cable exit:** Axial
- **Protection class:** I
- **Product conforming to standards:** EN 60950-1
- **Approvals:** UL, CSA, CCC (only centrifugal blowers)

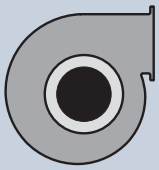

| Centrifugal fans | Mass centrifugal fans kg | Centrifugal blowers with flange | Mass centrifugal blowers kg |
|---|---|---|---|
| **R1G 146-AA07 -52** | 1,4 | **G1G 146-BA07 -52** | 2,8 |
| **R1G 146-AA11 -52** | 1,4 | **G1G 146-BA11 -52** | 2,8 |

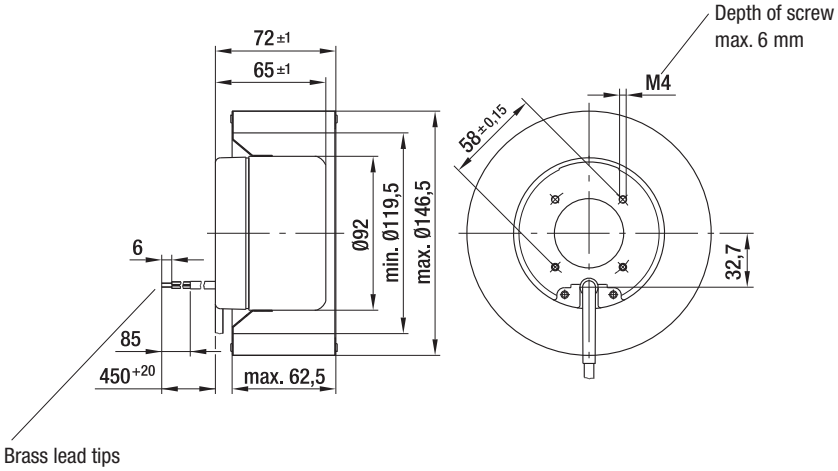


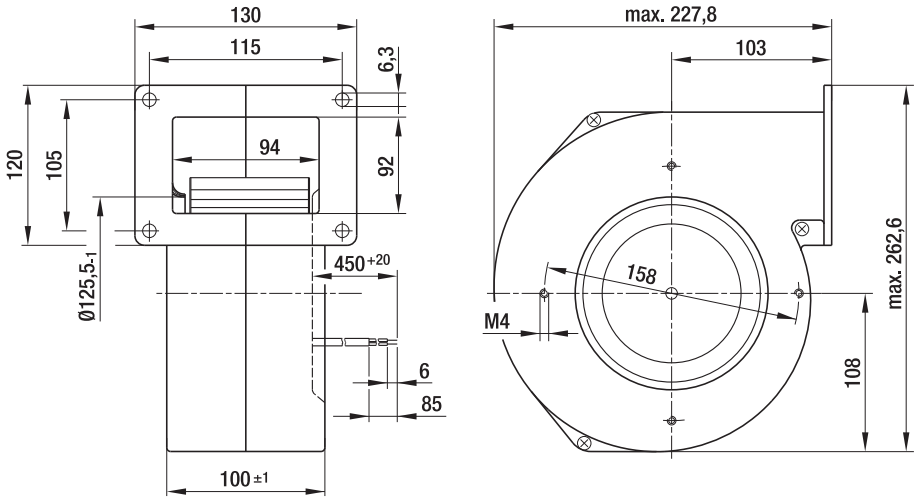

max. 505 m³/h

# DC centrifugal fans and blowers

## Ø 160 mm

- **Material:** Housing: Die-cast aluminium
  Impeller: Hot-dip galvanised sheet steel
  Rotor: Galvanised
- **Direction of rotation:** Clockwise, seen on rotor
- **Type of protection:** IP 42
- **Insulation class:** "B"
- **Mounting position:** Any
- **Condensate discharges:** None
- **Operation mode:** Continuous operation (S1)
- **Bearings:** Maintenance-free ball bearings

| Nominal data | | Curve | Nominal voltage | Voltage range | Air flow | Speed / rpm | Input power | Current draw | Sound power level | Min. back-pressure | Perm. amb. temp. | Technical features and electrical connections |
|---|---|---|---|---|---|---|---|---|---|---|---|---|
| **Type** | **Motor** | | **VDC** | **VDC** | **m³/h** | **rpm** | **W** | **A** | **dB(A)** | **Pa** | **°C** | |
| ***1G 160** | M1G 074-BF | A | 24 | 16-28 | 505 | 1750 | 105 | 5,80 | 67 | 0 | -25...+60 | p. 255 / G) |
| ***1G 160** | M1G 074-BF | A | 48 | 36-57 | 505 | 1750 | 105 | 2,90 | 67 | 0 | -25...+60 | p. 255 / G) |

Subject to alternations

**Curve:**

$U_N$ = nominal voltage (24 V /48 V)

$U_R$ = overvoltage (28 V / 57 V)

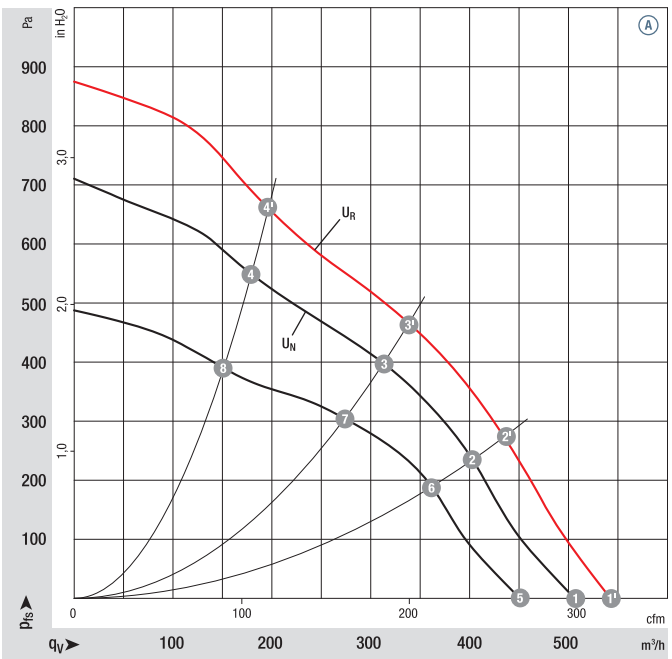


| | | n rpm | $P_{ed}$ W | $Lp_A$ dB(A) | $\eta_{tL}$ % |
|---|---|---|---|---|---|
| A | 1' | 1890 | 134 | 68 | — |
| A | 2' | 2200 | 118 | 67 | 52 |
| A | 3' | 2500 | 110 | 67 | 57 |
| A | 4' | 2900 | 102 | 69 | 52 |
| A | 1 | 1750 | 105 | 67 | — |
| A | 2 | 2030 | 95 | 66 | 52 |
| A | 3 | 2270 | 90 | 65 | 57 |
| A | 4 | 2550 | 81 | 67 | 44 |
| A | 5 | 1580 | 72 | 62 | — |
| A | 6 | 1810 | 66 | 62 | 52 |
| A | 7 | 2000 | 58 | 62 | 57 |
| A | 8 | 2200 | 48 | 63 | 54 |

Air performance measured as per: ISO 5801, Installation category A, with ebm-papst inlet nozzle without protection against accidental contact. Suction-side noise levels: LWA as per ISO 13347, LpA measured at 1 m distance to fan axis. The acoustic values given are only valid under the measurment conditions listed and may vary depending on the installation situation. With any deviation to the standard setup, the specific values have to be checked and reviewed once installed or fitted!
For detailed information see http://www.ebmpapst.com/general conditions



ebmpapst

- **Technical features:** See electrical connections p. 255
- **EMC:** Interference emission acc. to EN 61000-6-3
  Interference immunity acc. to EN 61000-6-2
- **Cable exit:** Axial
- **Protection class:** I
- **Product conforming to standards:** EN 60950-1
- **Approvals:** UL, CSA

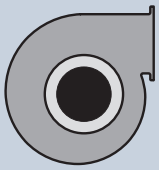

| Centrifugal fans | Mass centrifugal fans kg | Centrifugal blowers with flange | Mass centrifugal blowers kg |
|---|---|---|---|
| **R1G 160-AH29 -52** | 1,4 | **G1G 160-BH29 -52** | 2,8 |
| **R1G 160-AH39 -52** | 1,4 | **G1G 160-BH39 -52** | 2,8 |

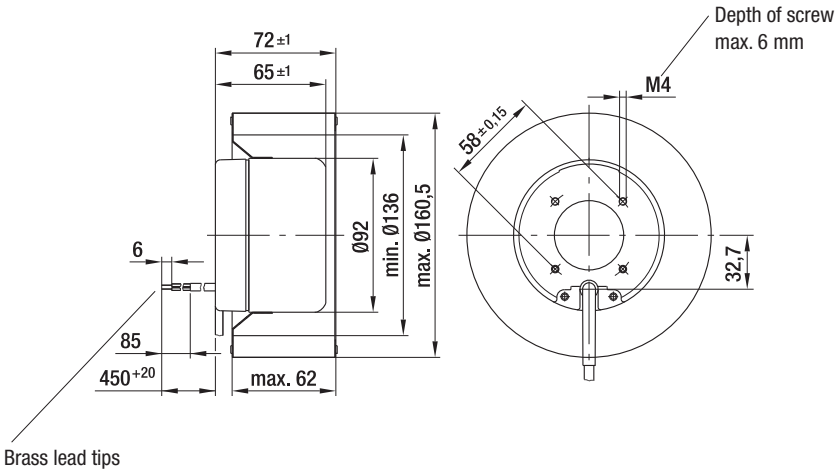


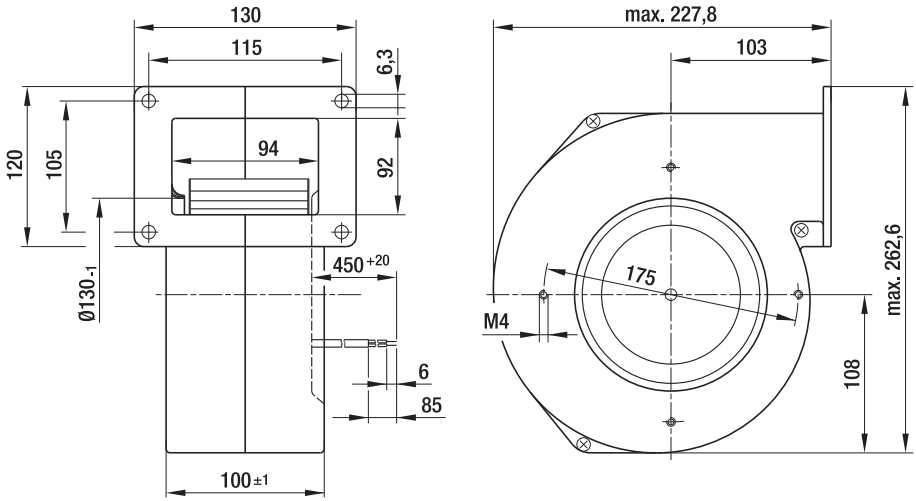

max. 700 m³/h

# DC Centrifugal blowers

## Ø 133 mm

- **Material:** Housing: Galvanised sheet steel
  Impeller: Galvanised sheet steel
  Rotor: Coated in black
- **Direction of rotation:** Clockwise, seen on rotor
- **Type of protection:** IP 42
- **Insulation class:** "B"
- **Mounting position:** Any
- **Condensate discharges:** None
- **Operation mode:** Continuous operation (S1)
- **Design:** Standard external-rotor motor anti-vibration mounted on both sides
- **Bearings:** Maintenance-free ball bearings

| Nominal data | | Curve | Nominal voltage | Voltage range | Air flow | Speed / rpm | Input power | Current draw | Sound power level | Min. back-pressure | Perm. amb. temp. | Technical features and electrical connections |
|---|---|---|---|---|---|---|---|---|---|---|---|---|
| **Type** | **Motor** | | **VDC** | **VDC** | **m³/h** | **rpm** | **W** | **A** | **dB(A)** | **Pa** | **°C** | |
| **D1G 133** | M1G 074-BF | A | 24 | 16-28 | 700 | 1780 | 105 | 5,60 | 62 | 50 | -25...+60 | p. 255 / G) |
| **D1G 133** | M1G 074-BF | A | 48 | 36-57 | 700 | 1780 | 105 | 2,80 | 62 | 50 | -25...+60 | p. 255 / G) |

Subject to alternations

**Curve:**

$U_N$ = nominal voltage (24 V /48 V)

$U_R$ = overvoltage (28 V / 57 V)

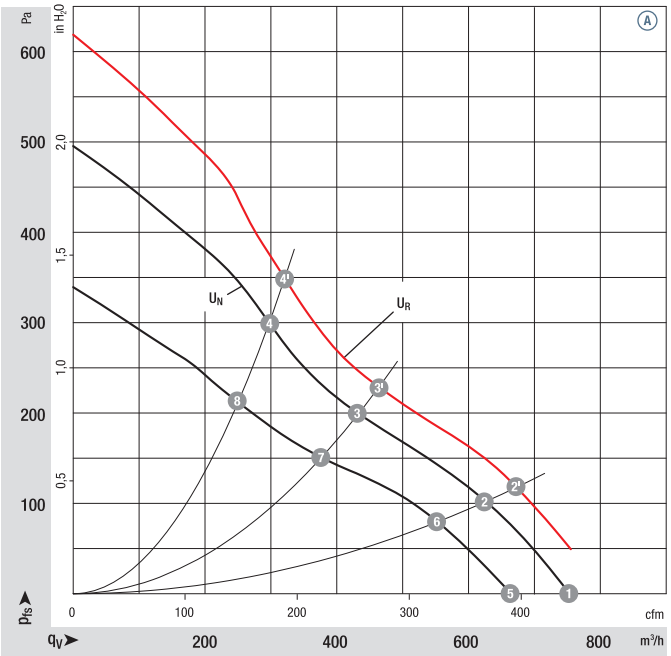


| | n rpm | $P_{ed}$ W | $Lp_A$ dB(A) | $\eta_{tL}$ % |
|---|---|---|---|---|
| A 1' | — | — | — | — |
| A 2' | 2050 | 121 | 63 | 49 |
| A 3' | 2490 | 106 | 62 | 41 |
| A 4' | 2820 | 100 | 62 | 37 |
| A 1 | 1780 | 105 | 62 | — |
| A 2 | 1900 | 97 | 61 | 49 |
| A 3 | 2310 | 86 | 59 | 41 |
| A 4 | 2630 | 80 | 60 | 37 |
| A 5 | 1500 | 73 | 59 | — |
| A 6 | 1720 | 67 | 57 | 49 |
| A 7 | 2020 | 58 | 56 | 41 |
| A 8 | 2230 | 49 | 56 | 37 |

Air performance measured as per: ISO 5801, Installation category A, with ebm-papst inlet nozzle without protection against accidental contact. Suction-side noise levels: LWA as per ISO 13347, LpA measured at 1 m distance to fan axis. The acoustic values given are only valid under the measurment conditions listed and may vary depending on the installation situation. With any deviation to the standard setup, the specific values have to be checked and reviewed once installed or fitted!
For detailed information see http://www.ebmpapst.com/general conditions



ebmpapst

- **Technical features:** See electrical connections p. 255
- **EMC:** Interference emission acc. to EN 61000-6-3
  Interference immunity acc. to EN 61000-6-2
- **Cable exit:** Variabel
- **Protection class:** I
- **Product conforming to standards:** EN 60950-1
- **Approvals:** UL, CSA; Ⓐ (48 VDC) auch CCC

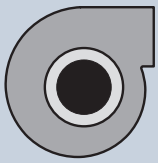

| Centrifugal blowers without flange | Mass centrifugal blowers kg |
|---|---|
| **D1G 133-AB29 -52** | 3,3 |
| **D1G 133-AB39 -52** | 3,3 |

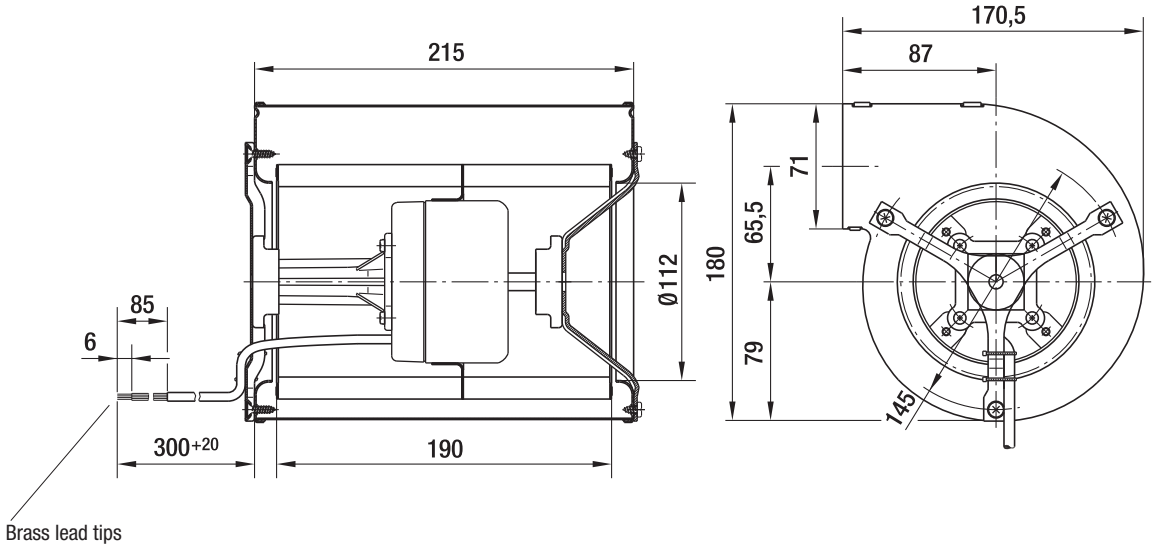

max. 1020 m³/h

# DC Centrifugal blowers

## Ø 133 mm

- **Material:** Housing: Galvanised sheet steel
  Impeller: Galvanised sheet steel
  Rotor: Coated in black
- **Direction of rotation:** Clockwise, seen on rotor
- **Type of protection:** IP 42
- **Insulation class:** "B"
- **Mounting position:** Any
- **Condensate discharges:** None
- **Operation mode:** Continuous operation (S1)
- **Design:** Standard external-rotor motor anti-vibration mounted on both sides
- **Bearings:** Maintenance-free ball bearings

| Nominal data | | Curve | Nominal voltage | Voltage range | Air flow | Speed / rpm | Input power | Current draw | Sound power level | Min. back-pressure | Perm. amb. temp. | Technical features and electrical connections |
|---|---|---|---|---|---|---|---|---|---|---|---|---|
| **Type** | **Motor** | | **VDC** | **VDC** | **m³/h** | **rpm** | **W** | **A** | **dB(A)** | **Pa** | **°C** | |
| **D1G 133** | M1G 074-BF | A | 24 | 16-28 | 1020 | 1580 | 118 | 6,00 | 64 | 0 | -25...+60 | p. 255 / G) |
| **D1G 133** | M1G 074-BF | A | 48 | 36-57 | 1020 | 1580 | 118 | 3,00 | 64 | 0 | -25...+60 | p. 255 / G) |

Subject to alternations

**Curve:**

$U_N$ = nominal voltage (24 V /48 V)

$U_R$ = overvoltage (28 V / 57 V)

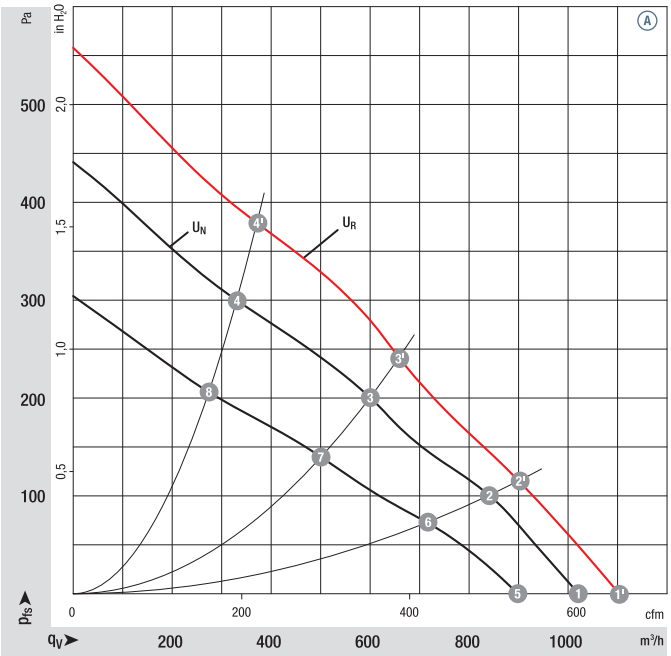


| | | n rpm | $P_{ed}$ W | $Lp_A$ dB(A) | $\eta_{tL}$ % |
|---|---|---|---|---|---|
| A | 1' | 1700 | 145 | 65 | — |
| A | 2' | 1930 | 133 | 62 | 38 |
| A | 3' | 2290 | 122 | 59 | 41 |
| A | 4' | 2700 | 99 | 61 | 32 |
| A | 1 | 1580 | 118 | 64 | — |
| A | 2 | 1790 | 107 | 61 | 38 |
| A | 3 | 2100 | 95 | 57 | 41 |
| A | 4 | 2410 | 73 | 58 | 32 |
| A | 5 | 1400 | 78 | 60 | — |
| A | 6 | 1580 | 70 | 56 | 38 |
| A | 7 | 1760 | 56 | 53 | 41 |
| A | 8 | 2000 | 44 | 53 | 32 |

Air performance measured as per: ISO 5801, Installation category A, with ebm-papst inlet nozzle without protection against accidental contact. Suction-side noise levels: LWA as per ISO 13347, LpA measured at 1 m distance to fan axis. The acoustic values given are only valid under the measurment conditions listed and may vary depending on the installation situation. With any deviation to the standard setup, the specific values have to be checked and reviewed once installed or fitted!
For detailed information see http://www.ebmpapst.com/general conditions



ebmpapst

- **Technical features:** See electrical connections p. 255
- **EMC:** Interference emission acc. to EN 61000-6-3
  Interference immunity acc. to EN 61000-6-2
- **Cable exit:** Variabel
- **Protection class:** I
- **Product conforming to standards:** EN 60950-1
- **Approvals:** UL, CSA

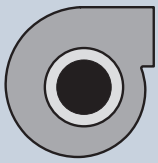

| Centrifugal blowers without flange | Mass centrifugal blowers kg |
|---|---|
| D1G 133-DC13 -52 | 3,4 |
| D1G 133-DC17 -52 | 3,4 |

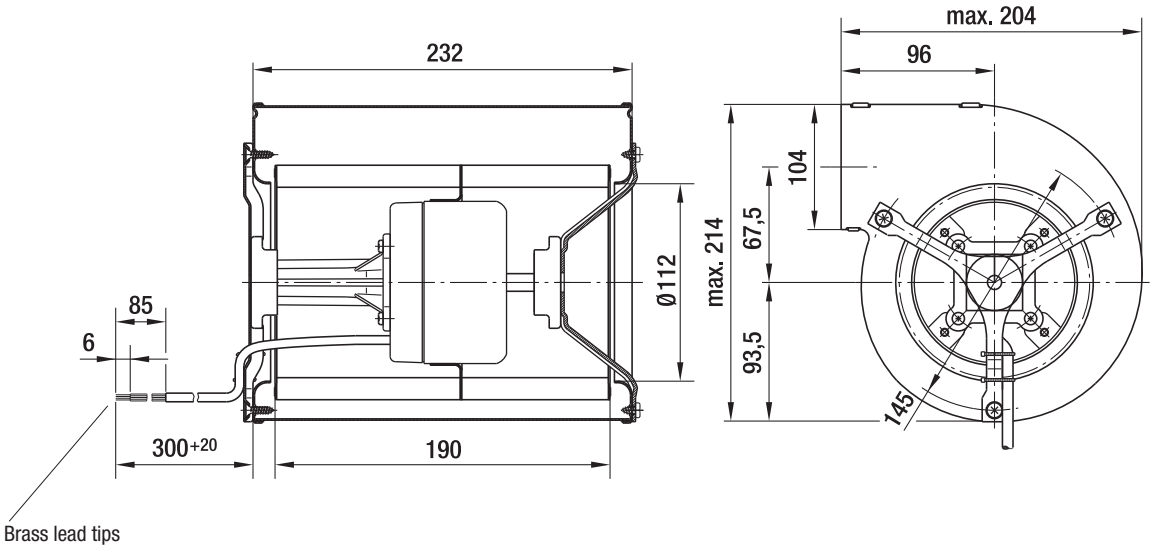

max. 1000 m³/h

# DC Centrifugal blowers

## Ø 146 mm

- **Material:** Housing: Galvanised sheet steel
  Impeller: Galvanised sheet steel
  Rotor: Coated in black
- **Direction of rotation:** Clockwise, seen on rotor
- **Type of protection:** IP 42
- **Insulation class:** "B"
- **Mounting position:** Any
- **Condensate discharges:** None
- **Operation mode:** Continuous operation (S1)
- **Design:** Standard external-rotor motor anti-vibration mounted on both sides
- **Bearings:** Maintenance-free ball bearings

| Nominal data | | Curve | Nominal voltage | Voltage range | Air flow | Speed / rpm | Input power | Current draw | Sound power level | Min. back-pressure | Perm. amb. temp. | Technical features and electrical connections |
|---|---|---|---|---|---|---|---|---|---|---|---|---|
| **Type** | **Motor** | | **VDC** | **VDC** | **m³/h** | **rpm** | **W** | **A** | **dB(A)** | **Pa** | **°C** | |
| **D1G 146** | M1G 074-CF | A | 24 | 16-28 | 1000 | 1350 | 105 | 5,10 | 61 | 0 | -25...+60 | p. 255 / G) |
| **D1G 146** | M1G 074-CF | A | 48 | 36-57 | 1000 | 1350 | 105 | 2,60 | 61 | 0 | -25...+60 | p. 255 / G) |

Subject to alternations

**Curve:**

$U_N$ = nominal voltage (24 V /48 V)

$U_R$ = overvoltage (28 V / 57 V)

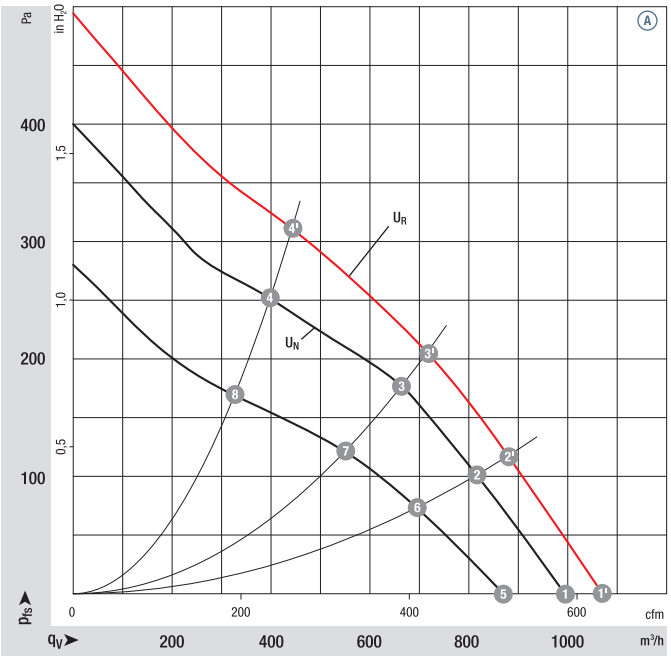


| | | n rpm | $P_{ed}$ W | $Lp_A$ dB(A) | $\eta_{tL}$ % |
|---|---|---|---|---|---|
| A | 1' | 1460 | 129 | 63 | — |
| A | 2' | 1680 | 119 | 60 | 53 |
| A | 3' | 1890 | 111 | 58 | 61 |
| A | 4' | 2240 | 95 | 59 | 55 |
| A | 1 | 1350 | 105 | 61 | — |
| A | 2 | 1570 | 95 | 58 | 53 |
| A | 3 | 1750 | 88 | 56 | 61 |
| A | 4 | 2010 | 70 | 57 | 55 |
| A | 5 | 1210 | 70 | 56 | — |
| A | 6 | 1360 | 60 | 54 | 53 |
| A | 7 | 1460 | 53 | 52 | 61 |
| A | 8 | 1670 | 42 | 51 | 55 |

Air performance measured as per: ISO 5801, Installation category A, with ebm-papst inlet nozzle without protection against accidental contact. Suction-side noise levels: LWA as per ISO 13347, LpA measured at 1 m distance to fan axis. The acoustic values given are only valid under the measurment conditions listed and may vary depending on the installation situation. With any deviation to the standard setup, the specific values have to be checked and reviewed once installed or fitted!
For detailed information see http://www.ebmpapst.com/general conditions



ebmpapst

- **Technical features:** See electrical connections p. 255
- **EMC:** Interference emission acc. to EN 61000-6-3
  Interference immunity acc. to EN 61000-6-2
- **Cable exit:** Variabel
- **Protection class:** I
- **Product conforming to standards:** EN 60950-1
- **Approvals:** UL, CSA

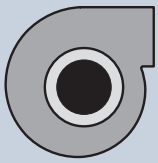

| Centrifugal blowers without flange | Mass centrifugal blowers kg |
|---|---|
| **D1G 146-AA19 -52** | 3,5 |
| **D1G 146-AA33 -52** | 3,5 |

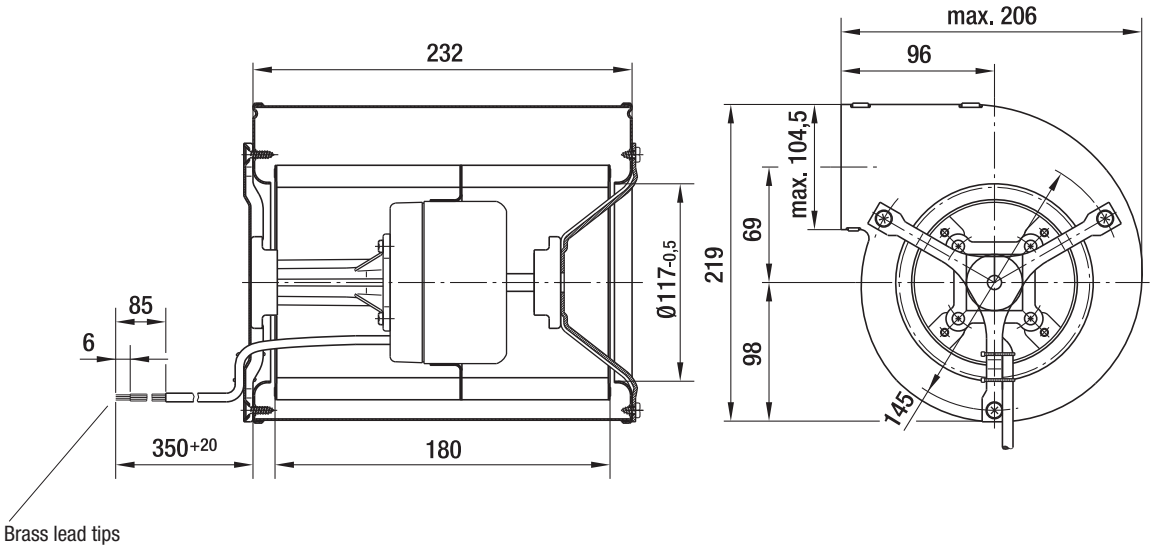

max. 980 m³/h

# DC Centrifugal blowers

## Ø 160 mm

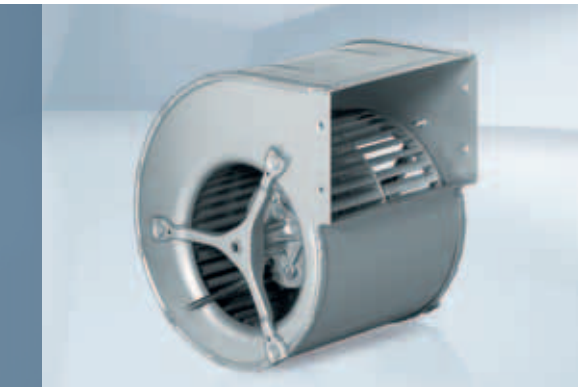

- **Material:** Housing: Galvanised sheet steel
  Impeller: Galvanised sheet steel
  Rotor: Coated in black
- **Direction of rotation:** Clockwise, seen on rotor
- **Type of protection:** IP 42
- **Insulation class:** "B"
- **Mounting position:** Any
- **Condensate discharges:** None
- **Operation mode:** Continuous operation (S1)
- **Design:** Standard external-rotor motor anti-vibration mounted on both sides
- **Bearings:** Maintenance-free ball bearings

**Nominal data**

| Type | Motor | Curve | Nominal voltage VDC | Voltage range VDC | Air flow m³/h | Speed / rpm rpm | Input power W | Current draw A | Sound power level dB(A) | Min. back-pressure Pa | Perm. amb. temp. °C | Technical features and electrical connections |
|---|---|---|---|---|---|---|---|---|---|---|---|---|
| **D1G 160** | M1G 074-CF | A | 24 | 16-28 | 980 | 1250 | 112 | 5,60 | 60 | 0 | -25...+60 | p. 255 / G) |
| **D1G 160** | M1G 074-CF | A | 48 | 36-57 | 980 | 1250 | 112 | 2,90 | 60 | 0 | -25...+60 | p. 255 / G) |

Subject to alternations

**Curve:**

$U_N$ = nominal voltage (24 V /48 V)

$U_R$ = overvoltage (28 V / 57 V)

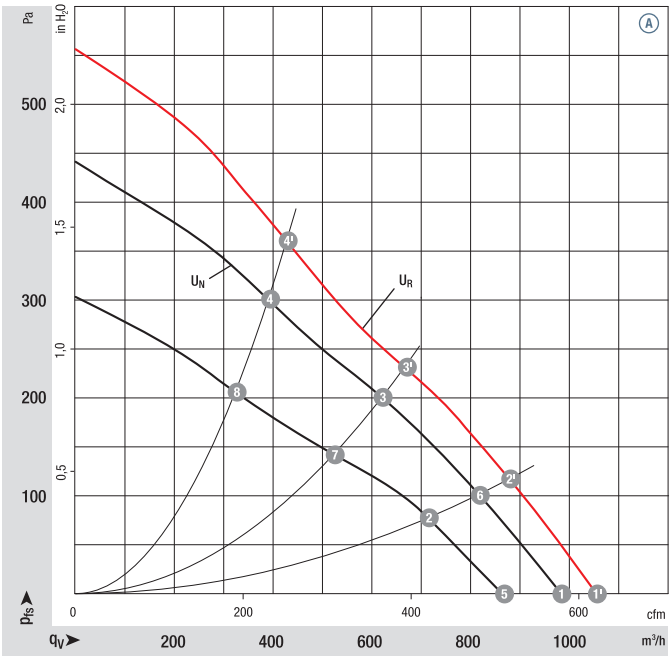


| | n rpm | $P_{ed}$ W | $Lp_A$ dB(A) | $\eta_{tL}$ % |
|---|---|---|---|---|
| A 1' | 1330 | 142 | 63 | — |
| A 2' | 1520 | 128 | 61 | 64 |
| A 3' | 1790 | 115 | 59 | 66 |
| A 4' | 2090 | 105 | 60 | 60 |
| A 1 | 1250 | 112 | 60 | — |
| A 2 | 1420 | 102 | 59 | 64 |
| A 3 | 1660 | 92 | 58 | 66 |
| A 4 | 1900 | 80 | 58 | 60 |
| A 5 | 1100 | 75 | 58 | — |
| A 6 | 1250 | 69 | 56 | 64 |
| A 7 | 1420 | 58 | 54 | 66 |
| A 8 | 1580 | 47 | 53 | 60 |

Air performance measured as per: ISO 5801, Installation category A, with ebm-papst inlet nozzle without protection against accidental contact. Suction-side noise levels: LWA as per ISO 13347, LpA measured at 1 m distance to fan axis. The acoustic values given are only valid under the measurment conditions listed and may vary depending on the installation situation. With any deviation to the standard setup, the specific values have to be checked and reviewed once installed or fitted!
For detailed information see http://www.ebmpapst.com/general conditions



ebmpapst

- **Technical features:** See electrical connections p. 255
- **EMC:** Interference emission acc. to EN 61000-6-3
  Interference immunity acc. to EN 61000-6-2
- **Cable exit:** Variabel
- **Protection class:** I
- **Product conforming to standards:** EN 60950-1
- **Approvals:** UL, CSA

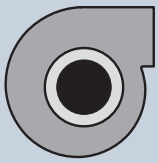

| Centrifugal blowers without flange | Mass centrifugal blowers kg |
|---|---|
| **D1G 160-DA19 -52** | 3,6 |
| **D1G 160-DA33 -52** | 3,6 |

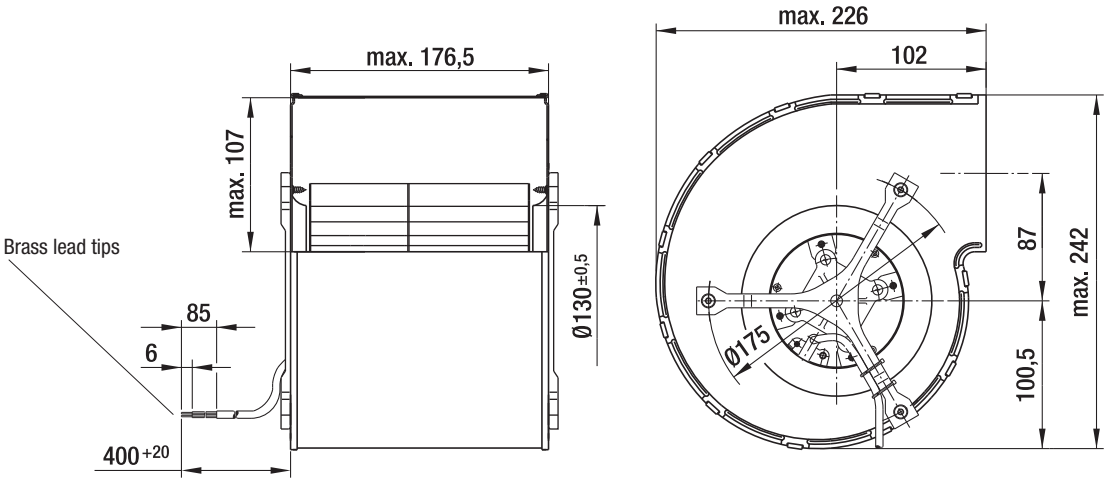

# DC fans - specials

| | |
|---|---|
| Speed signal | **164** |
| Alarm signal | **168** |
| Vario-Pro / Speed setting / Control input | **173** |
| Protection against ambient influences, Protection class IP 54 / IP 68 | **177** |

# DC fans - specials

*Technical information*

**Cooling capacity and efficiency**
Greater power density, increasing miniaturisation and extreme electronic component density are posing increased demands on the cooling capacity and efficiency of fans. The intelligent and space-saving integration of the fan in the device configuration is therefore of major importance:

- Tailor-made cooling adapted to the situation as and when required.
- Programmable cooling by defining speed profiles.
- Transparency of function thanks to complete, interactive monitoring in all operating conditions.

Standard fans in electronics cooling have proven themselves millions of times.

With a constant speed and a correspondingly high noise level, they continuously provide the air flow needed for extreme cases. These extreme situations, however, occur extremely rarely, if at all, during the operating period. An intelligent fan is needed, which adapts automatically to the currently required level of cooling.

ebm-papst provides intelligent cooling concepts which are optimally adapted to requirements. For example:

**1. Speed adjustment via temperature sensor**
ebm-papst answers with a complete range of DC fans with temperature-controlled speed adjustment via a temperature sensor, available in a variety of standard dimensions.

Installation is very simple. The control electronics receive thermal information for the speed adjustment continuously and without losses, either externally via a freely designed and positionable strand, or internally directly in the fan hub in the air flow. A range of temperature sensors can be found on page 174.

**2. DC fans with separate control input**
Open or closed-loop speed control is also possible with DC fans that have a separate control input. A variation in speed can thus be implemented via a control voltage or a pulse-width modulated signal. These possibilities are used primarily in devices that have appropriate standard interfaces and thus require a load-dependent variation of the fans.

# DC fans - specials

*Technical information*

**3. Speed signal**
DC fans with speed signal.
The integrated „electronic tachometer“ continuously provides an actual speed signal for external evaluation. The user is informed at all times of the current fan speed via an extremely simple signal evaluation on the customer side. The speed signal is via a separate lead.

**4. Alarm signal**
For applications which require monitored fan operation with alarm signal, ebm-papst has numerous alarm signal versions, either a static, pre-processed or interface-compatible high or low continuous signal depending on the type of fan.

**5. Turbo drives**
Fans with three-phase EC drives and microprocessor-controlled motor electronics. These three-phase motors whose torque is virtually non-reliant on the rotor position are used for extremely high running smoothness. The speed of these fans can be controlled over a very wide range with PWM, analogue voltage or temperature. Optionally, the fans can be supplied with reversible direction of rotation and active brake operation.

**6. Vario-Pro fans**
This high-end fan concept by ebmpapst with programmed intelligence and customer-specific integrated functions makes your electronics cooling even more versatile and competitive. Vario-Pro ensures a fresh economic breeze for all demanding cooling tasks – e.g. where greater reliability, more flexibility and intelligent function features such as alarm function, speed control etc. are required.

The successful concept of Vario-Pro is: Tailor-made software instead of fixed hardware, because programmed software modules for motor control and application intelligence are responsible for the work that analogue components were responsible for in the past. This central control unit of the Vario-Pro comprises a microcontroller and an EEPROM, on which all characteristics are stored.

**7. Protection against environmental influences**
Some applications place particular demands on the fans resistance to ambient influences, such as dust, moisture, water and salt. ebm-papst offer solutions for adapting fans to these ambient conditions.

# Speed signal /2

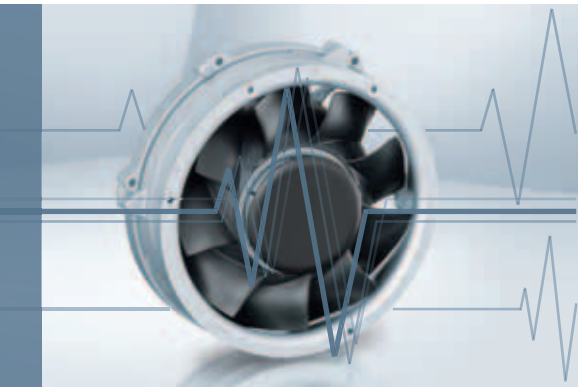

- Speed-proportional rectangular pulse for external speed monitoring of fan motor
- 2, 3 or 6 pulses per revolution
- Open collector signal output
- Extremely wide operating voltage range
- Easy adaptation to user interface
- Connection via separate lead
- The sensor signal also serves as a major comparison variable for setting and maintaining the setpoint speed for interactive or controlled cooling with one or several interconnected fans.

## Electrical connection

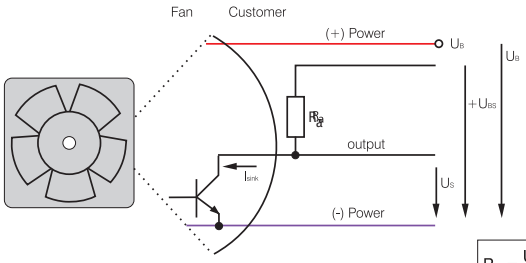


$$R_a = \frac{U_{BS} - U_{SLow}}{I_{SINK}}$$

All voltages measured to ground.
External load resistor $R_a$ / $U_S$ / $U_{BS}$ required.

Signal output voltage
Standard signal for all models (exceptions see below)

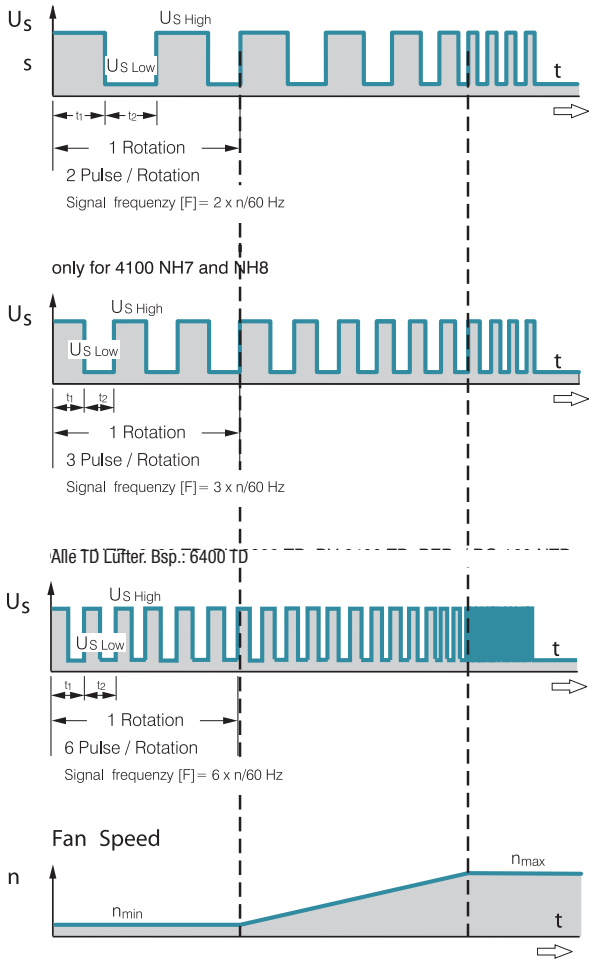


| Signal data | Speed signal $U_S$ Low | Condition: $I_{sink}$ | Speed signal $U_S$ High | Condition: $I_{source}$ | Sensor operating voltage $U_{BS}$ max. | Perm. sink current $I_{sink}$ max. | Pulses per revolution | Fan description Basic type |
|---|---|---|---|---|---|---|---|---|
| **Type** | **VDC** | **mA** | **VDC** | **mA** | **VDC** | **mA** | | **Page** |
| 250 | ≤ 0,4 | 2 | ≤ 30 | 0 | 30 | 2 | 2 | 31 |
| 400 F | ≤ 0,4 | 1 | ≤ 30 | 0 | 30 | 2 | 2 | 32 |
| 400 | ≤ 0,4 | 1 | ≤ 30 | 0 | 30 | 2 | 2 | 33 |
| 420 J | ≤ 0,4 | 2 | ≤ 15 | 0 | 15 | 4 | 2 | 34 |
| 500 F | ≤ 0,4 | 1 | ≤ 30 | 0 | 30 | 2 | 2 | 35 |
| 600 F | ≤ 0,4 | 1 | ≤ 30 | 0 | 30 | 2 | 2 | 36 |
| 620 | ≤ 0,4 | 2 | ≤ 30 | 0 | 30 | 4 | 2 | 37 |
| 630 U | ≤ 0,4 | 2 | ≤ 30 | 0 | 30 | 4 | 2 | 38 |
| 600 N | ≤ 0,4 | 2 | ≤ 28 | 0 | 28 | 4 | 2 | 39 |
| 600 J | ≤ 0,4 | 2 | ≤ 30 | 0 | 30 | 4 | 2 | 41 |
| 700 F | ≤ 0,4 | 2 | ≤ 30 | 0 | 30 | 4 | 2 | 42 |
| 8450 | ≤ 0,4 | 2 | ≤ 28 | 0 | 28 | 4 | 2 | 43 |
| 8400 N | ≤ 0,4 | 2 | ≤ 28 | 0 | 28 | 4 | 2 | 44 |
| 8400 N VARIOFAN | ≤ 0,4 | 2 | ≤ 30 | 0 | 30 | 4 | 2 | 45 |
| 8300 | ≤ 0,4 | 2 | ≤ 30 | 0 | 30 | 4 | 2 | 46 |
| 8200 J | ≤ 0,4 | 2 | ≤ 30 | 0 | 30 | 4 | 2 | 47 |
| 3400 N | ≤ 0,4 | 2 | ≤ 28 | 0 | 28 | 4 | 2 | 48 |
| 3400 N VARIOFAN | ≤ 0,4 | 2 | ≤ 30 | 0 | 30 | 4 | 2 | 49 |
| 3300 | ≤ 0,4 | 2 | ≤ 30 | 0 | 30 | 4 | 2 | 50 |
| 3300 N | ≤ 0,4 | 2 | ≤ 30 | 0 | 30 | 4 | 2 | 51 |
| 3212 J / 3214 J | ≤ 0,4 | 2 | ≤ 30 | 0 | 30 | 4 | 2 | 52 |
| 3218 J | ≤ 0,4 | 2 | ≤ 60 | 0 | 60 | 4 | 2 | 52 |
| 3250 J | ≤ 0,4 | 2 | ≤ 60 | 0 | 60 | 4 | 3 | 53 |
| 4412 F / 4414 F | ≤ 0,4 | 2 | ≤ 30 | 0 | 30 | 4 | 2 | 54 |
| 4418 F | ≤ 0,4 | 2 | ≤ 60 | 0 | 60 | 4 | 2 | 54 |
| 4400 FN | ≤ 0,4 | 2 | ≤ 30 | 0 | 30 | 4 | 2 | 55 |
| 4312 / 4314 | ≤ 0,4 | 2 | ≤ 30 | 0 | 30 | 4 | 2 | 56 |
| 4318 | ≤ 0,4 | 2 | ≤ 60 | 0 | 60 | 4 | 2 | 56 |
| 4312 / 4314 VARIOFAN | ≤ 0,4 | 2 | ≤ 30 | 0 | 30 | 4 | 2 | 57 |
| 4318 VARIOFAN | ≤ 0,4 | 2 | ≤ 60 | 0 | 60 | 4 | 2 | 57 |
| 4400 | ≤ 0,4 | 2 | ≤ 30 | 0 | 30 | 4 | 2 | 58/59 |
| 4100 N | ≤ 0,4 | 2 | ≤ 30 | 0 | 30 | 4 | 2 | 60 |
| 4100 NHH...NH6 | ≤ 0,4 | 2 | ≤ 60 | 0 | 60 | 10 | 2 | 61 |
| 4100 NH7...NH8 | ≤ 0,4 | 2 | ≤ 60 | 0 | 60 | 20 | 3 | 62 |
| DV 4100 | ≤ 0,4 | 2 | ≤ 30 | 0 | 30 | 4 | 2 | 63 |

Subject to alternations

**Available on request:**
- Electrically isolated sensor and signal circuit
- Varying voltage potentials for power and logic circuit

| Signal data | Speed signal $U_S$ Low | Condition: $I_{sink}$ | Speed signal $U_S$ High | Condition: $I_{source}$ | Sensor operating voltage $U_{BS}$ max. | Perm. sink current $I_{sink}$ max. | Pulses per revolution | Fan description Basic type |
|---|---|---|---|---|---|---|---|---|
| **Type** | **VDC** | **mA** | **VDC** | **mA** | **VDC** | **mA** | | **Page** |
| 5200 N | ≤ 0,4 | 2 | ≤ 30 | 0 | 30 | 4 | 2 | 64 |
| DV 5200 | ≤ 0,4 | 2 | ≤ 30 | 0 | 30 | 4 | 2 | 65 |
| 5112 N | ≤ 0,4 | 2 | ≤ 15 | 0 | 5 | 20 | 2 | 66 |
| 5114 N / 5118 N | ≤ 0,4 | 2 | ≤ 60 | 0 | 60 | 20 | 2 | 66 |
| 5300 | ≤ 0,4 | 2 | ≤ 72 | 0 | 72 | 4 | 2 | 67 |
| 5300 TD | ≤ 0,4 | 2 | ≤ 72 | 0 | 72 | 20 | 6 | 68 |
| 7112 N / 7118 N | ≤ 0,4 | 2 | ≤ 60 | 0 | 60 | 20 | 2 | 69 |
| 7114 N | ≤ 0,4 | 2 | ≤ 30 | 0 | 30 | 20 | 2 | 69 |
| 7200 N | ≤ 0,4 | 2 | ≤ 15 | 0 | 15 | 20 | 2 | 70 |
| 6300 | ≤ 0,4 | 2 | ≤ 72 | 0 | 72 | 20 | 2 | 72 |
| 6300 TD | ≤ 0,4 | 2 | ≤ 72 | 0 | 72 | 20 | 6 | 73/74 |
| DV 6300 | ≤ 0,4 | 2 | ≤ 72 | 0 | 72 | 20 | 6 | 75 |
| 6400 | ≤ 0,4 | 2 | ≤ 60 | 0 | 60 | 20 | 2 | 76 |
| 2200 FTD | ≤ 0,4 | 2 | ≤ 72 | 0 | 72 | 20 | 6 | 80 |
| RL 48 | ≤ 0,4 | 2 | ≤ 30 | 0 | 30 | 4 | 2 | 95 |
| RL 65 | ≤ 0,4 | 2 | ≤ 30 | 0 | 30 | 4 | 2 | 96 |
| RL 90 N | ≤ 0,4 | 2 | ≤ 30 | 0 | 30 | 4 | 2 | 97 |
| RLF 100 | ≤ 0,4 | 2 | ≤ 30 | 0 | 30 | 4 | 2 | 98 |
| RG 90 N | ≤ 0,4 | 2 | ≤ 30 | 0 | 30 | 4 | 2 | 99 |
| RG 125 N | ≤ 0,4 | 2 | ≤ 30 | 0 | 30 | 4 | 2 | 100 |
| RG 160 N | ≤ 0,4 | 2 | ≤ 30 | 0 | 30 | 20 | 2 | 101 |
| RG 160 NTD | ≤ 0,4 | 2 | ≤ 60 | 0 | 60 | 20 | 6 | 102 |
| RG 190 TD | ≤ 0,4 | 2 | ≤ 72 | 0 | 72 | 20 | 6 | 103 |
| RG 220 TD | ≤ 0,4 | 2 | ≤ 72 | 0 | 72 | 20 | 6 | 104 |
| RG 225 TD | ≤ 0,4 | 2 | ≤ 72 | 0 | 72 | 20 | 6 | 105 |
| RET 97 TD | ≤ 0,4 | 2 | ≤ 72 | 0 | 72 | 20 | 6 | 106 |
| REF 100 | ≤ 0,4 | 2 | ≤ 30 | 0 | 30 | 4 | 2 | 107 |
| RER 120 TD | ≤ 0,4 | 2 | ≤ 72 | 0 | 72 | 20 | 6 | 109 |
| RER 133 TD | ≤ 0,4 | 2 | ≤ 72 | 0 | 72 | 20 | 6 | 113 |
| RER 160 NTD | ≤ 0,4 | 2 | ≤ 60 | 0 | 60 | 20 | 6 | 115 |
| REF 175 TD | ≤ 0,4 | 2 | ≤ 72 | 0 | 72 | 20 | 6 | 116 |
| RER 175 TD | ≤ 0,4 | 2 | ≤ 72 | 0 | 72 | 20 | 6 | 117 |
| RER 190 TD | ≤ 0,4 | 2 | ≤ 72 | 0 | 72 | 20 | 6 | 118 |
| RER 220 TD | ≤ 0,4 | 2 | ≤ 72 | 0 | 72 | 20 | 6 | 124 |
| RER 225 TD | ≤ 0,4 | 2 | ≤ 72 | 0 | 72 | 20 | 6 | 125 |

Subject to alternations

**Note:**
With these fan options, deviations in regard to temperature range, voltage range and power consumption are possible compared with standard fan data.

# Speed signal /12

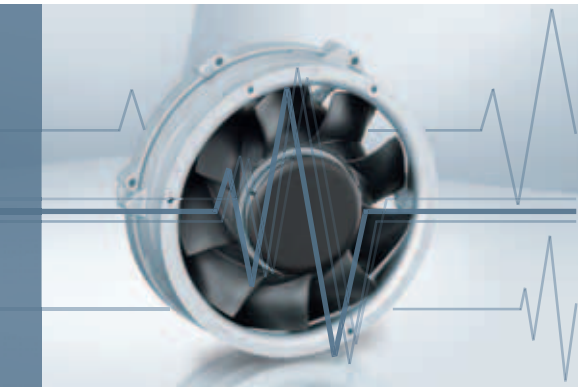

- Speed-proportional rectangular pulse for external speed monitoring of fan motor
- 2, 3 or 6 pulses per revolution
- TTL-compatible
- Integrated pull-up resistor
- Connection via separate lead
- The sensor signal also serves as a major comparison variable for setting and maintaining the setpoint speed for interactive or controlled cooling with one or more interconnected fans.

## Electrical connection

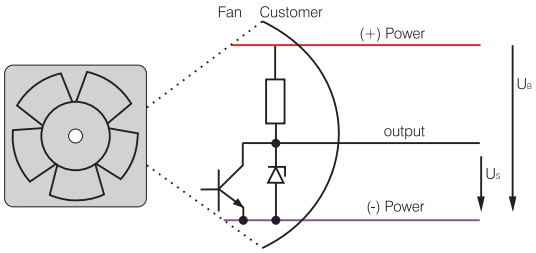


All voltages measured to ground.

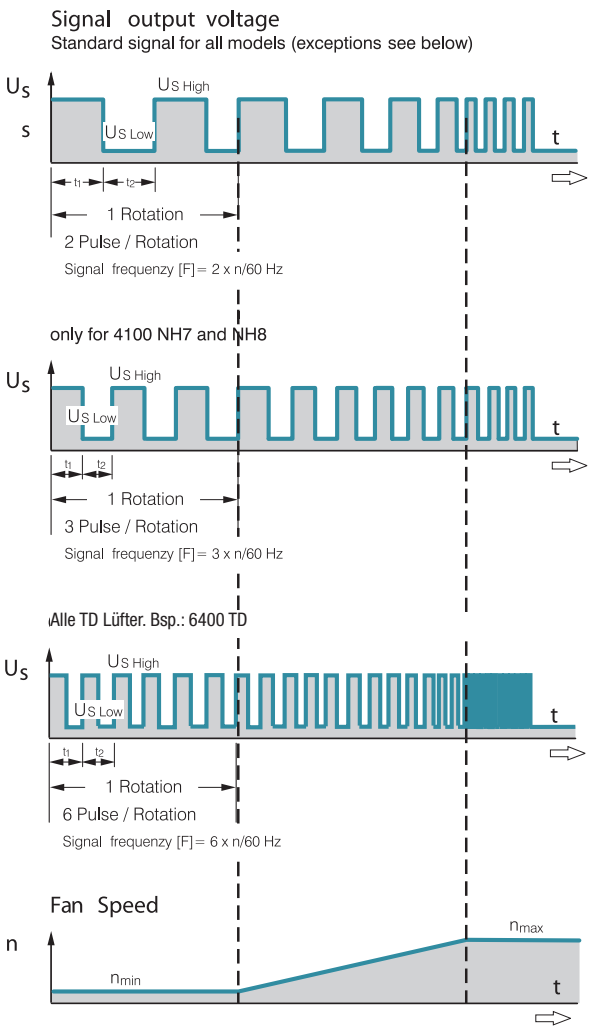


| Signal data | Speed signal $U_S$ Low | Condition: $I_{sink}$ | Speed signal $U_S$ High | Condition: $I_{source}$ | Perm. sink current $I_{sink}$ max. | Fan description Basic type |
|---|---|---|---|---|---|---|
| **Type** | **VDC** | **mA** | **VDC** | **mA** | **mA** | **Page** |
| 614 N/12 GM | ≤ 0,4 | 1 | 2,5–5,5 | 1 | 1 | 39 |
| 618 N/12 N | ≤ 0,4 | 1 | 2,5–5,5 | 1 | 1 | 39 |
| 8412 N/12 H | ≤ 0,4 | 1 | 2,5–5,5 | 1 | 1 | 44 |
| 4412 F/12 GM | ≤ 0,4 | 1 | 2,5–5,5 | 1 | 1 | 54 |
| 4418 F/12 | ≤ 0,4 | 1 | 2,5–5,5 | 1 | 1 | 54 |
| 4312 /12 M | ≤ 0,4 | 1 | 2,5–5,5 | 1 | 1 | 56 |
| 4314 /12 | ≤ 0,4 | 1 | 2,5–5,5 | 1 | 1 | 56 |
| 4182 N/12 X | ≤ 0,4 | 1 | 2,5–5,5 | 1 | 1 | 60 |

Subject to alternations

**Note:**
With these fan options, deviations in regard to temperature range, voltage range and power consumption are possible compared with standard fan data.



ebmpapst

**Available on request:**
- Electrically isolated sensor and signal circuit
- Varying voltage potentials for power and logic circuit

| Signal data | Speed signal $U_S$ Low | Condition: $I_{sink}$ | Speed signal $U_S$ High | Condition: $I_{source}$ | Perm. sink current $I_{sink}$ max. | Fan description Basic type |
|---|---|---|---|---|---|---|
| **Type** | **VDC** | **mA** | **VDC** | **mA** | **mA** | **Page** |
| 7214 N/12 | ≤ 0,4 | 2 | 2,5–5,5 | 1 | ≤ 20 | 70 |
| 6424/12 H | ≤ 0,4 | 2 | 2,5–5,5 | 1 | ≤ 20 | 76 |
| DV 6424/12 | ≤ 0,4 | 2 | 4,5–5,25 | 2 | ≤ 12 | 78 |
| DV 6448/12 | ≤ 0,4 | 2 | 4,5–5,25 | 2 | ≤ 12 | 78 |
| RG 125-19/12 N/12 | ≤ 0,4 | 1 | 2,5–5,5 | 1 | ≤ 1 | 100 |
| RG 160-28/12 N/12 | ≤ 0,4 | 2 | 2,5–5,5 | 1 | ≤ 5 | 101 |
| RG 160-28/18 N/12 | ≤ 0,4 | 2 | 2,5–5,5 | 1 | ≤ 20 | 101 |
| RER 125-19/12 N/12 | ≤ 0,4 | 1 | 2,5–5,5 | 1 | ≤ 1 | 112 |
| RER 160-28/12 N/12 | ≤ 0,4 | 2 | 2,5–5,5 | 1 | ≤ 5 | 114 |
| RER 160-28/18 N/12 | ≤ 0,4 | 2 | 2,5–5,5 | 1 | ≤ 20 | 114 |

Subject to alternations

**Note:**
With these fan options, deviations in regard to temperature range, voltage range and power consumption are possible compared with standard fan data.

# Alarm signal /17

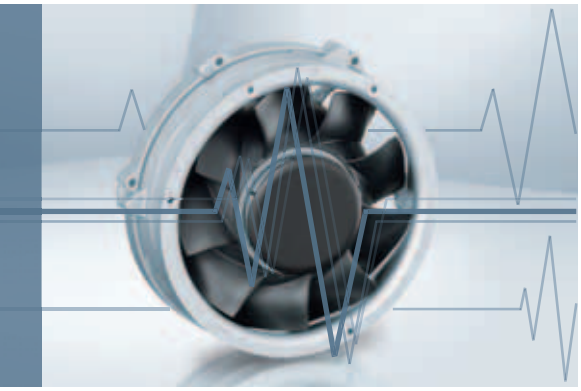

- Alarm signal for speed monitoring
- Signal output via open collector
- The fan emits a high continuous signal during trouble-free operation within the permissible voltage range.
- Low signal when speed limit is not reached
- After elimination of fault, the fan returns to its setpoint speed; the alarm signal reverts to high.

| Alarm signal data | Alarm output voltage $U_{A\,Low}$ | Condition: | Condition: $I_{sink}$ = | Alarm output-voltage $U_{A\,High}$ | Condition: | Condition: $I_{source}$ | Alarm operating-voltage $U_{BA\,max.}$ | Max. permissible Sink current | Alarm delay time $t_2$ | Condition: | Speed limit $n_G$ | Fan description Basic type |
|---|---|---|---|---|---|---|---|---|---|---|---|---|
| **Type** | **VDC** | | **mA** | **VDC** | | **mA** | **VDC** | **mA** | **s** | | **RPM** | **Page** |
| 8318 /17 | ≤ 0,4 | n < nG | 2 | ≤ 60 | n > nG | 0 | 60 | 20 | ≤ 15 | * | 1500 ± 100 | 46 |
| 8318 /17 H | ≤ 0,4 | n < nG | 2 | ≤ 60 | n > nG | 0 | 60 | 20 | ≤ 15 | * | 1500 ± 100 | 46 |
| 3314 /17 | ≤ 0,4 | n < nG | 2 | ≤ 60 | n > nG | 0 | 60 | 20 | ≤ 15 | * | 1500 ± 100 | 50 |
| 4318 /17 | ≤ 0,4 | n < nG | 2 | ≤ 60 | n > nG | 0 | 60 | 20 | ≤ 15 | * | 850 ± 100 | 56 |
| 4184 N /17 X | ≤ 0,4 | n < nG | 2 | ≤ 60 | n > nG | 0 | 60 | 20 | ≤ 15 | * | 1500 ± 100 | 60 |

Subject to alternations

**Note:**
With these fan specials, deviations as regards temperature range, voltage range and power consumption are possible compared with standard fans.

## Electrical connection

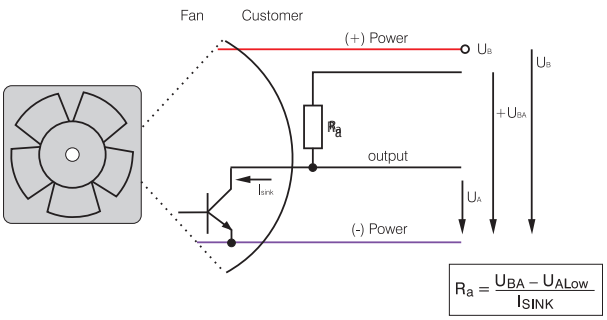


All voltages measured to ground.
External load resistor $R_a$ from $U_A$ to $U_{BA}$ required.

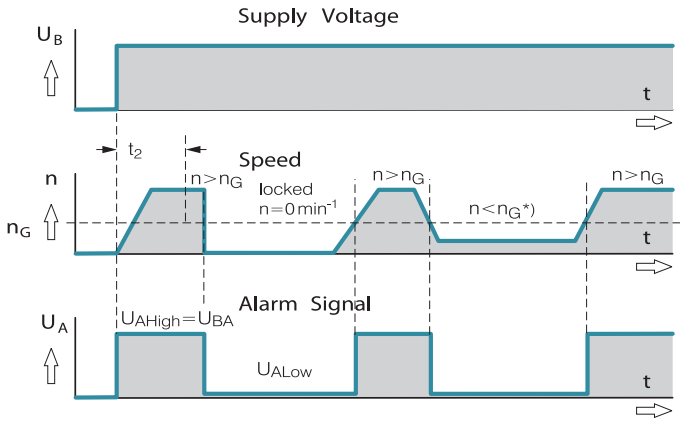


$t_2$ = Alarm signal suppression during start-up
* n < speed limit $n_G$ by braking or locking.



ebmpapst

**Available on request:**

- With integrated signal latching for subsequent recognition of short-time faults
- Alarm circuit open collector or TTL
- Electrically isolated for maximum device safety
  Defects in the power circuit do not affect the alarm circuit.

| Alarm signal data | Alarm output voltage $U_{A\ Low}$ | Condition: | Condition: $I_{sink}$ = | Alarm output-voltage $U_{A\ High}$ | Condition: | Condition: $I_{source}$ | Alarm operating-voltage $U_{BA\ max.}$ | Max. permissible Sink current | Alarm delay time $t_2$ | Condition: | Speed limit $n_G$ | Fan description Basic type |
|---|---|---|---|---|---|---|---|---|---|---|---|---|
| **Type** | **VDC** | | **mA** | **VDC** | | **mA** | **VDC** | **mA** | **s** | | **RPM** | **Page** |
| 4312/17 MT VARIOFAN | ≤ 0,4 | n < nG | 2 | ≤ 60 | n > nG | 0 | 60 | 20 | ≤ 15 | * | 1500 ± 100 | 57 |
| 4312/17 T VARIOFAN | ≤ 0,4 | n < nG | 2 | ≤ 60 | n > nG | 0 | 60 | 20 | ≤ 15 | * | 1500 ± 100 | 57 |
| 4314/17 T VARIOFAN | ≤ 0,4 | n < nG | 2 | ≤ 60 | n > nG | 0 | 60 | 20 | ≤ 15 | * | 1150 ± 100 | 57 |
| 4318/17 T VARIOFAN | ≤ 0,4 | n < nG | 2 | ≤ 60 | n > nG | 0 | 60 | 20 | ≤ 15 | * | 850 ± 100 | 57 |
| 7214 N/17 | ≤ 0,4 | n < nG | 2 | ≤ 60 | n > nG | 0 | 60 | 15 | ≤ 15 | * | 1330 ± 60 | 70 |

Subject to alternations

* After switching on $U_B$

**Note:**
With these fan specials, deviations as regards temperature range,
voltage range and power consumption are possible compared with standard fans.

# Alarm signal /19

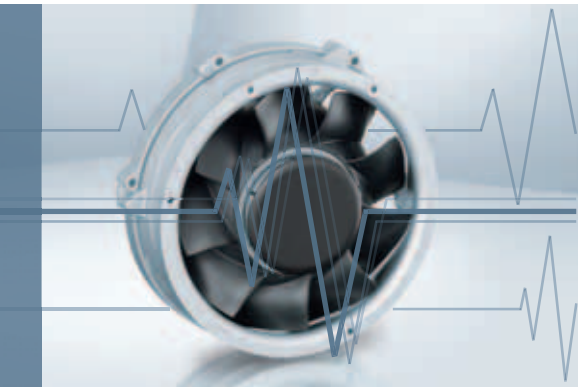

- Alarm signal for speed monitoring
- Signal output via open collector
- The fan emits a low continuous signal during trouble-free operation within the permissible voltage range.
- High signal when speed limit is not reached
- After elimination of fault, the fan returns to its setpoint speed; the alarm signal reverts to low.

| Alarm signal data | Alarm output voltage $U_{A\,Low}$ | Condition: | Condition: $I_{sink}$ = | Alarm output-voltage $U_{A\,High}$ | Condition: | Condition: $I_{source}$ | Alarm operating-voltage $U_{BA\,max.}$ | Max. permissible Sink current | Alarm delay time $t_2$ | Condition: | Speed limit $n_G$ | Fan description Basic type |
|---|---|---|---|---|---|---|---|---|---|---|---|---|
| **Type** | **VDC** | | **mA** | **VDC** | | **mA** | **VDC** | **mA** | **s** | | **RPM** | **Page** |
| 8314/19 H | ≤ 0,4 | n > nG | 2 | ≤ 60 | n < nG | 0 | 60 | 20 | ≤ 15 | * | 1500 ± 100 | 46 |
| 4312/19 | ≤ 0,4 | n > nG | 2 | ≤ 60 | n < nG | 0 | 60 | 20 | ≤ 15 | * | 1500 ± 100 | 56 |
| 7214 N/19 | ≤ 0,4 | n > nG | 2 | ≤ 60 | n < nG | 0 | 60 | 10 | 10 ± 4 | * | 1800 ± 20 | 70 |
| RLF 100-11/14/19 | ≤ 0,4 | n > nG | 2 | ≤ 28 | n < nG | 0 | 28 | 10 | 10 ± 4 | * | 1900 ± 100 | 98 |
| RER 101-36/18N/19 HH | ≤ 0,4 | n > nG | 2 | ≤ 28 | n < nG | 0 | 28 | 10 | 10 ± 4 | * | 1900 ± 100 | 108 |

Subject to alternations

* After switching on $U_B$

**Note:**
With these fan specials, deviations as regards temperature range, voltage range and power consumption are possible compared with standard fans.

**Available on request:**
- With integrated signal latching for subsequent recognition of short-term faults.
- Alarm circuit open collector or TTL.
- Electrically isolated for max. device safety; defects in power circuit have no effect on the alarm circuit.

**Electrical connection**

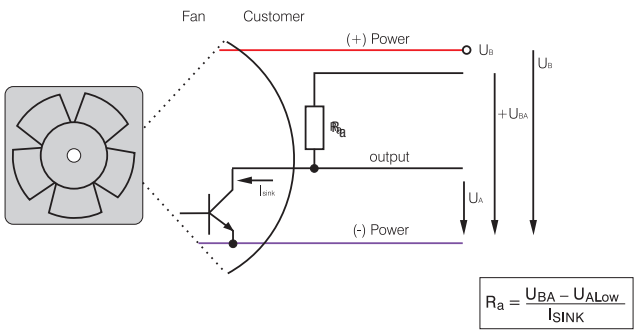


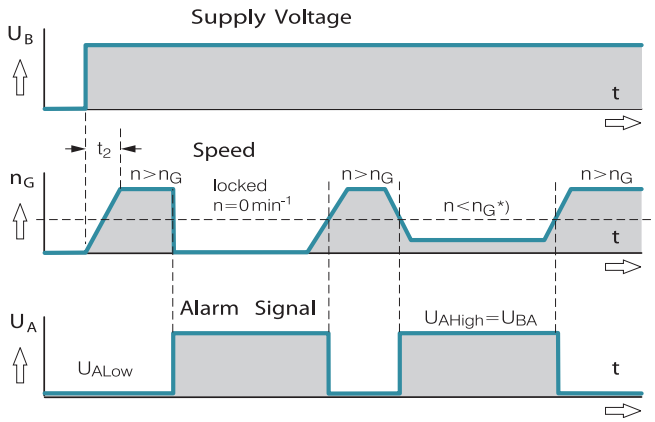


All voltages measured to ground.
External load resistor $R_a$ from $U_A$ to $U_{BA}$ required.

$t_2$ = Alarm signal suppression during start-up.
* n < Speed limit $n_G$ by braking or locking.



ebmpapst

# Alarm signal /37

## Go / No-go alarm

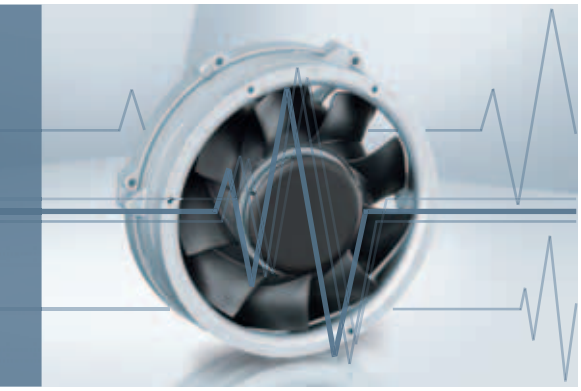

- Alarm signal for speed monitoring
- Signal output via open collector
- The fan emits a high continuous signal during trouble-free operation within the permissible voltage range.
- Low signal when speed limit is not reached
- After elimination of fault, the fan returns to its setpoint speed; the alarm signal reverts to high.

| Alarm signal data | Alarm output voltage $U_{A\ Low}$ | Condition: | Condition: $I_{sink}$ = | Alarm output-voltage $U_{A\ High}$ | Condition: | Condition: $I_{source}$ | Alarm operating-voltage $U_{BA}$ max. | Max. permissible Sink current | Alarm delay time $t_2$ | Condition: | Speed limit $n_G$ | Fan description Basic type |
|---|---|---|---|---|---|---|---|---|---|---|---|---|
| **Type** | **VDC** | | **mA** | **VDC** | | **mA** | **VDC** | **mA** | **s** | | **RPM** | **Page** |
| 8412 N/37 GMLV | ≤ 0,4 | n ≤ nG | 2 | ≤ 28 | n > nG | 0 | 28 | 10 | <1 | * | 0 | 45 |
| 3412 N/37 GV | ≤ 0,4 | n ≤ nG | 2 | ≤ 28 | n > nG | 0 | 28 | 10 | <1 | * | 0 | 49 |

Subject to alternations

* After switching on $U_B$

**Note:**
With these fan specials, deviations as regards temperature range, voltage range and power consumption are possible compared with standard fans.

**Available on request:**
- Alarm circuit TTL compatible.

**Electrical connection**

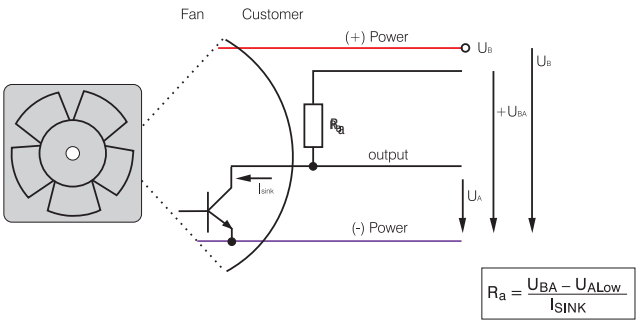


All voltages measured to ground.
External load resistor $R_a$ from $U_A$ to $U_{BA}$ required.

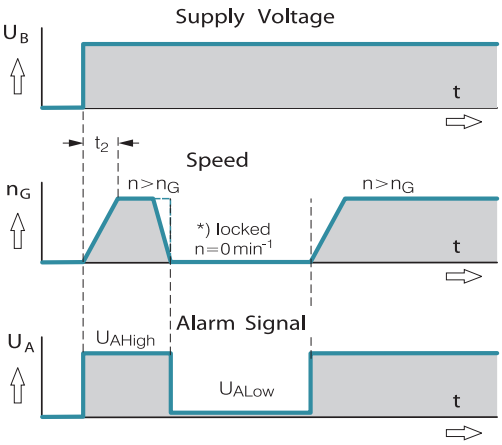


$t_2$ = Alarm signal suppression during start-up.
* n < Speed limit $n_G$ by braking or locking.

# Alarm signal /39

## Go / No-go alarm

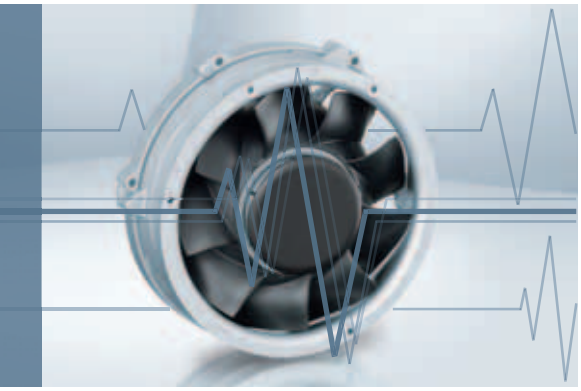

- Alarm signal for speed monitoring
- Signal output via open collector
- The fan emits a low continuous signal during trouble-free operation within the permissible voltage range.
- High signal when speed limit is not reached
- After elimination of fault, the fan returns to its setpoint speed; the alarm signal reverts to low.

| Alarm signal data | Alarm output voltage $U_{A\ Low}$ | Condition: | Condition: $I_{sink}$ = | Alarm output-voltage $U_{A\ High}$ | Condition: | Condition: $I_{source}$ | Alarm operating-voltage $U_{BA\ max.}$ | Max. permissible Sink current | Alarm delay time $t_2$ | Condition: | Speed limit $n_G$ | Fan description Basic type |
|---|---|---|---|---|---|---|---|---|---|---|---|---|
| **Type** | **VDC** | | **mA** | **VDC** | | **mA** | **VDC** | **mA** | **s** | | **RPM** | **Page** |
| 412/39 | ≤ 0,5 | n > nG | 2 | ≤ 28 | n = nG | 0 | 28 | 10 | <1 | * | 0 | 33 |
| 612 F/39 H | ≤ 0,5 | n > nG | 2 | ≤ 28 | n = nG | 0 | 28 | 10 | <1 | * | 0 | 36 |
| 614 N/39 M | ≤ 0,5 | n > nG | 2 | ≤ 28 | n = nG | 0 | 28 | 10 | <1 | * | 0 | 39 |
| 618 N/39 N | ≤ 0,5 | n > nG | 2 | ≤ 28 | n = nG | 0 | 28 | 10 | <1 | * | 0 | 39 |
| 3412 N/39 H | ≤ 0,5 | n > nG | 2 | ≤ 28 | n = nG | 0 | 28 | 10 | <1 | * | 0 | 48 |
| 3414 N/39 HH | ≤ 0,5 | n > nG | 2 | ≤ 28 | n = nG | 0 | 28 | 10 | <1 | * | 0 | 48 |
| 4412 F/39 GL | ≤ 0,5 | n > nG | 2 | ≤ 28 | n = nG | 0 | 28 | 10 | <1 | * | 0 | 54 |
| 4412 F/39 M | ≤ 0,5 | n > nG | 2 | ≤ 28 | n = nG | 0 | 28 | 10 | <1 | * | 0 | 54 |
| 4414 F/39 | ≤ 0,5 | n > nG | 2 | ≤ 28 | n = nG | 0 | 28 | 10 | <1 | * | 0 | 54 |
| 4414 FN/39 H | ≤ 0,4 | n > nG | 2 | ≤ 30 | n = nG | 0 | 30 | 4 | <1 | * | 0 | 55 |

Subject to alternations

* After switching on $U_B$

**Note:**
With these fan specials, deviations as regards temperature range, voltage range and power consumption are possible compared with standard fans.

### Electrical connection

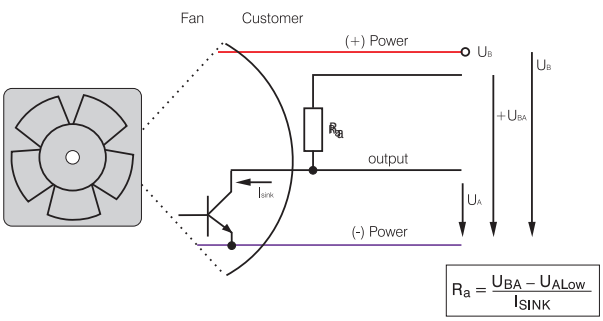


All voltages measured to ground
External load resistor Ra from $U_A$ to $U_{BA}$ required.

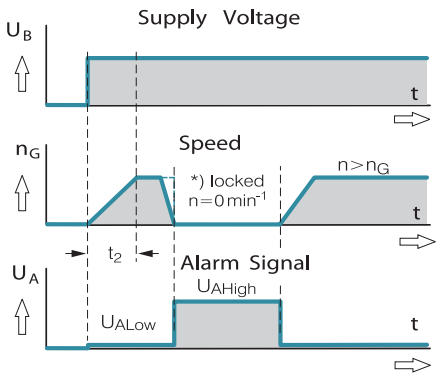


$t_2$ = Alarm signal suppression during start-up
* n < Speed limit $n_G$ by braking or locking



ebmpapst

# Vario-Pro®

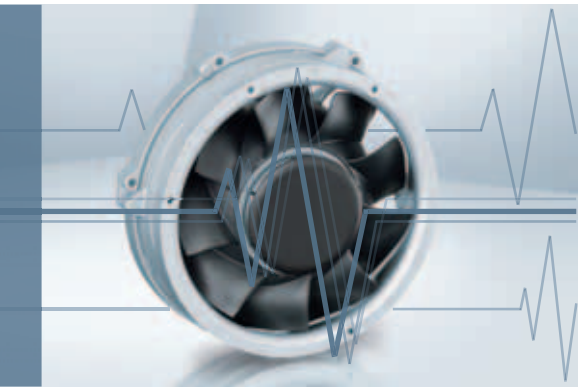

– ”Software instead of hardware“ – aptly describes the unique fan concept, equipped at the plant with tailor-made intelligence for cooling electronics.
– Flexible configuration using software, allows quicker availability, sampling from the factory and the ability to supply customer-specific solutions in any quantity.

## Vario-Pro-Features

### External Speed setting

– Speed setting via temperature, PWM or analogue control voltage
  See page 174 (Speed setting)
– Description of speed curve with up to 14 selectable interpolation points
  Linear interpolation between the points
– Zero speed possible
– Recognition of sensor failure: In case of loss of sensor, the fan operates at programmable (fail-safe) speed.

### Alarm and tachometer functions

– Optional alarm and/or tachometer function
– Selectable alarm speed limit (with hysteresis) and alarm delay time
– Latching of alarm signal
– Delay only when starting or permanently active
– ”High“ or ”Low“ output signal in case of alarm
– Optional alarm if temperature sensor fails
– Optional alarm in case of excess temperature

### Motor management

– High control accuracy due to digital motor management
– Higher operating efficiency due to optimum adaptation of motor hardware and software

| Fan series | Page |
|---|---|
| 620 | 37 |
| 8400 N | 44 |
| 8300 | 46 |
| 8200 J | 47 |
| 3400 N | 48 |
| 3300 | 50 |
| 3300 N | 51 |
| 3200 J | 52 |
| 3250 J | 53 |
| 4400 FN | 55 |
| 4300 | 56 |
| 4100 N | 60 |

| Fan series | Page |
|---|---|
| 4100 NH...NH6 | 61 |
| 4100 NH 7-8 | 62 |
| DV 4100 | 63 |
| 5200 N | 64 |
| DV 5200 | 65 |
| 5100 N | 66 |
| 5300 | 67 |
| 7100 N | 69 |
| 7200 N | 70 |
| 6100 N | 71 |
| 6300 | 72 |
| DV 6300 | 75 |

| Fan series | Page |
|---|---|
| 6400 | 76 |
| DV 6400 | 78 |
| RL 90 N | 97 |
| RLF 100 | 98 |
| RG 90 N | 99 |
| RG 125 N | 100 |
| RG 160 N | 101 |
| REF 100 | 107 |
| RER 101 | 108 |
| RER 125 N | 112 |
| RER 160 N | 114 |

# Speed setting via temperature sensor

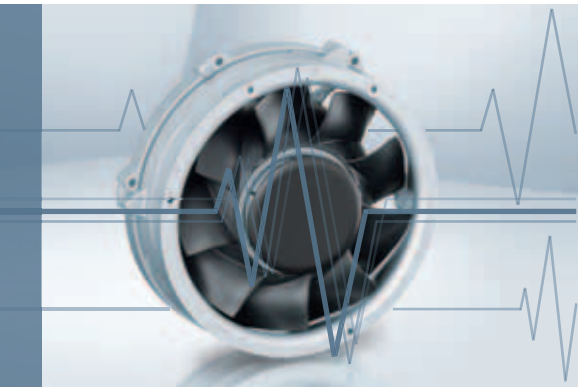

– The control variable is a temperature sensor which is either integrated into the fan or connected to an additional control wire.

**External temperature sensor Type T**

– Ext. NTC type LZ370 (p. 253) is required (to be ordered seperatly)

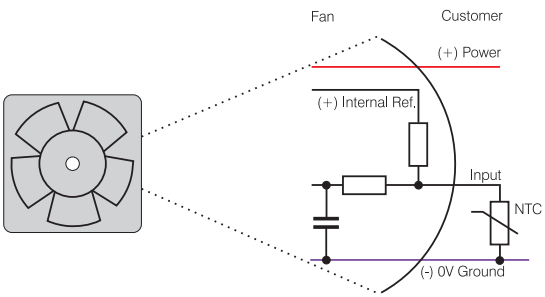


**Internal temperature sensor Type I**

– NTC integrated into the fan hub

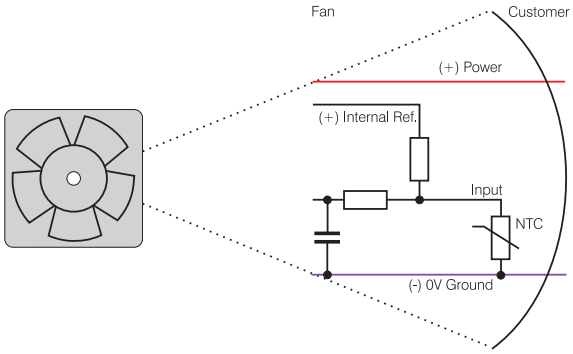


**Standard speed-temperature curve for type T and type I**

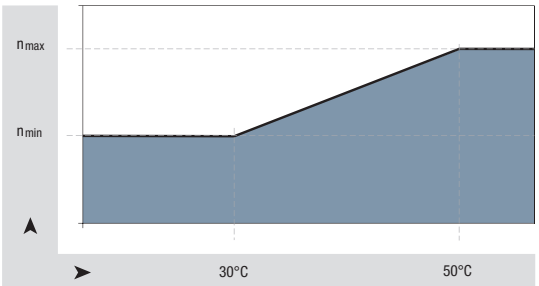


$n_{min} \approx {}^{1}/_{2}\, n_{max}$
$T_{min} \approx 30\ °C;\ T_{max} = 50\ °C$

**Optionally available with customer specific temperature-speed control curve**

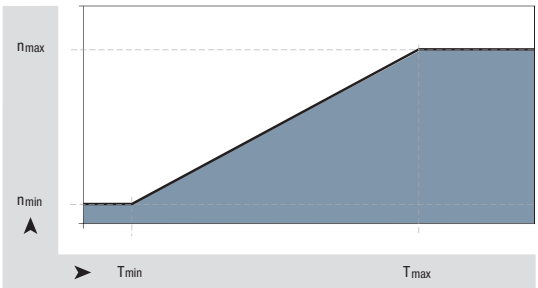


$n_{min} \approx 800\ {}^{1}/_{min}$ $n_{max}$ model-dependent
$T_{min} \approx 5\ °C$ $T_{max} \leq 85\ °C$, model-dependent

# Speed setting with control voltage or PWM

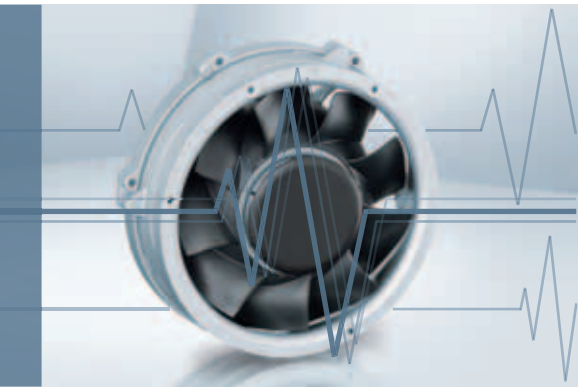

– The control variable is a PWM signal or analogue control voltage.

**Speed setting via control voltage Type A**

– Standard control range 0 ... 10 V

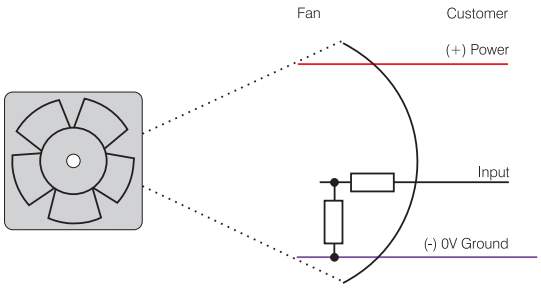


Typical input resistance >10 kΩ

**Drehzahlvorgabe mittels PWM Typ P**

– Standard PWM signal in two versions
  a) PWM frequency, mainly 1– 10 kHz (0–100%), Open collector input
  b) Four-wire interface in accordance with Intel specifications for 12 VDC fans, PWM frequency 25 kHz, incl. speed signal /2

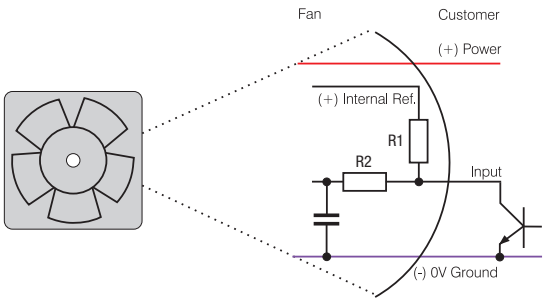


– Optional with potentiometer

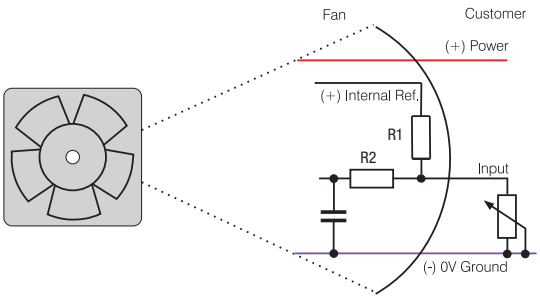


Internal reference = +5V
R1 typical 4.7...10 kΩ
R2 typical 100 kΩ

**Standard curve P / A**

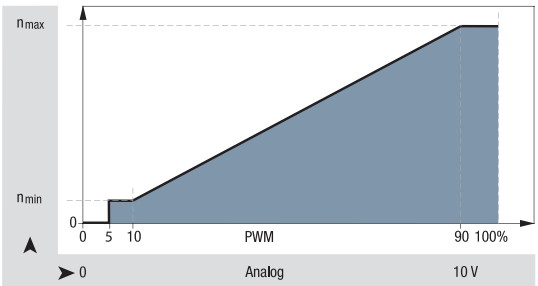


**Optionally available with customer specific P / A speed control curve**

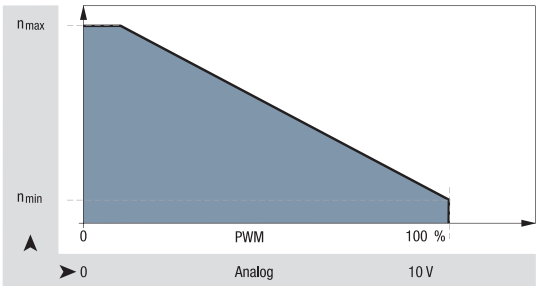

# Speed setting via multi-option control input

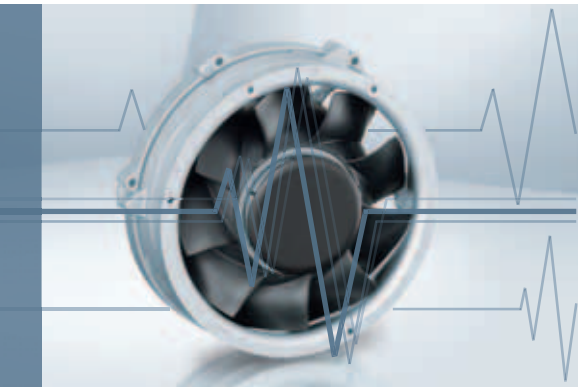

- Customer can operate input either with PWM signal, analogue voltage, external temperature control module or resistor.
- The control signal-speed characteristics of the fan differ from the standard curve of the A and P inputs (see p. 175).
- To attain the maximum speed, the control wire must be switched against UB.
- The control input is usually combined with an open collector tachometer (Type /2, see page 164).

**Speed setting via multi-option control input**

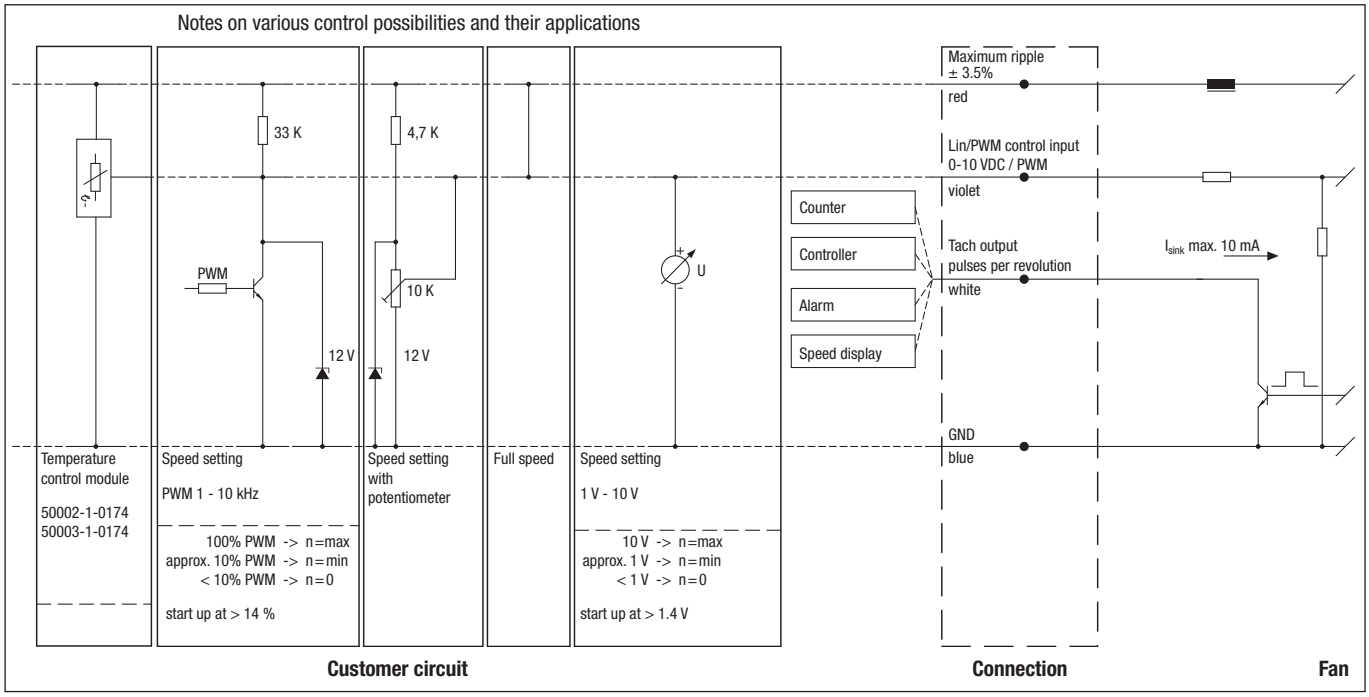


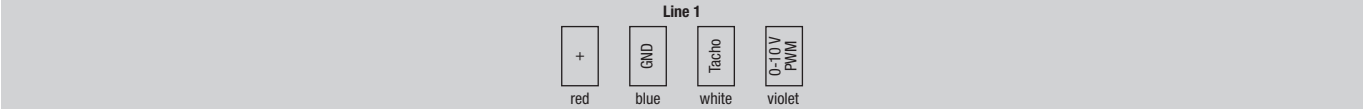


| Line | Connection | Colour | Assignment / function |
|---|---|---|---|
| 1 | + | red | Maximum ripple ± 3.5 % |
| | GND | blue | GND |

| Line | Connection | Colour | Assignment / function |
|---|---|---|---|
| 1 | Tach | white | Tach output: |
| | | | 3 pulses / revolution |
| | 0-10 V / PWM | violet | Control input (Impedance 100 kΩ) |



ebmpapst

# Protected fans

## against environmental influences

– Capable to fulfil special requirements for a broad range of applications
– Resistant to environmental influences, such as dust, splash water, humidity, spray water and salt fog
– Highly competent solutions for adapting fans to environmental conditions

**Moisture protection**
Coated motor and printed circuit board protects against humidity and condensation.

**Type of protection: IP 54 / IP 68**
In the type of protection IP 54, the motor and circuit boards are coated and therefore protected against spray water and moisture.
The type of protection IP 68 is important for ebm-papst products, as it ensures a high degree of protection for the encapsulated motor and electronic against foreign bodies and water, whilst protecting the user against potential hazards upon contact. Types of protection higher than IP 68 are possible upon request.

**Salt fog protection**
Salt fog is extremely demanding on the resistance of the product. ebm-papst makes use of technologies that protect fans and blowers from salt fog reliably and durably.

**Stainless steel bearings**
Special bearings made of stainless steel provide additional protection.

The available solutions could be different depending on the fan size. We would be glad to develop solutions tailored to the demands of your application.

**Type of protection – IP code**

| | Protection against foreign bodies and accidental contact (first digit) | | Water protection (second digit) |
|---|---|---|---|
| X | No protection | X | No protection |
| 1 | Protection against foreign bodies > 50 mm (back of the hand) | 1 | Protection against dripping water or condensation |
| 2 | Protection against foreign bodies > 12 mm (finger) | 2 | Protection against dripping water, fans tilted 15° from vertical |
| 3 | Protection against foreign bodies > 2,5 mm (tool) | 3 | Protection against water spray up to 60° from vertical |
| 4 | Protection against foreign bodies > 1 mm (wire) | 4 | Protection against water spray from all sides |
| 5 | Protection against dust in harmful quantities | 5 | Protection against low-pressure water jets |
| 6 | Dust-proof | 6 | Protection against high-pressure water jets |
| | | 7 | Protection against temporary submersion (15 cm - 1 m) |
| | | 8 | Protection against continuous submersion |

# ACmaxx / GreenTech EC-compact fans

Technical information 180
Overview 183
Axial fans 184

# ACmaxx / GreenTech EC-compact fans

*Technical information*

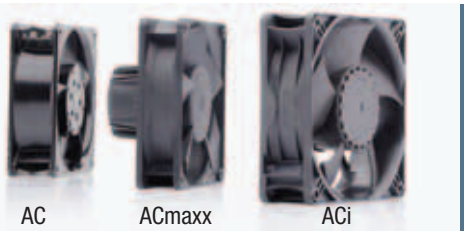


**Progress made by ebm-papst**
The best example: The ACmaxx fans from ebm-papst, which, thanks to an ingenious yet simple improvement over conventional AC fans, provide substantial benefits.
The aim in developing the new ACmaxx series was to raise the technology standard of the conventional AC fan significantly and, in the process, facilitate the transition to the new technology by retaining the overall mounting dimensions. In short, to ensure the fans can be replaced 1:1 without any peripheral changes or changes to the voltage situation. ebm-papst offers two generations of ACmaxx products that meet different needs.

**What ACmaxx and GreenTech EC-compact fan have in common:**
**Energy efficiency**
The drive concept is based on state-of-the-art GreenTech EC technology with outstanding motor efficiency. Compared to AC fans of the same size, ACmaxx energy consumption is up to 77% lower–for higher cooling capacity! Just the energy savings means that the products pay for themselves after only a few months. The savings over the entire service life, especially in systems with multiple fans, is considerable.

**Independent of mains frequency and mains voltage**
The ACmaxx and GreenTech EC-compact fans are prepared for direct connection to all AC voltages and frequencies. The speed, and thus important properties of the fan such as air flow and noise, are independent of the power frequency and do not change, even within the defined voltage range. Voltage fluctuations in the power system are automatically compensated for.

**Long service life**
The efficiency of ACmaxx and GreenTech EC-compact fan motors is up to 75% higher than that of conventional AC fan variants. This not only saves energy, it also means less self-heating in the motor. The reduced heating has a direct, positive effect on the bearing system, which is why the fans have a service life that is up to 85% longer! This also extends the service and maintenance intervals significantly. The expense of replacement fans, and even more expensive downtimes, are kept to a manageable minimum.

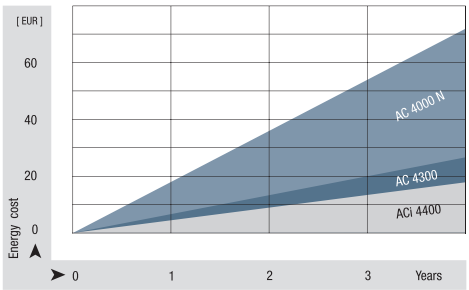


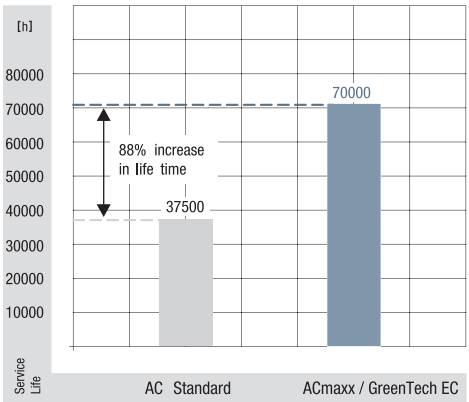

# ACmaxx / GreenTech EC-compact fans

*Technical information*

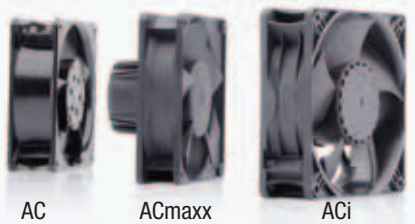

AC ACmaxx ACi

**Safety**

- Safety certifications: UL, CSA and VDE 0805 / EN60950. VDE 0700 / EN60335 on request.
- Our fans have the CE mark of conformity.
- EMC protection:
  > EN61000-4-4 Level 1 (1 kV or 2 kV)B
  > EN61000-4-2 Level 8 kV/15 kV or 4 kV/8 kV
  > EN61000-4-3
  > EN61000-4-6
  > EN61000-4-8
  > EN55022 Class B

**Ambient influences**

AC fans are extremely common and are used in a wide variety of applications. In control cabinet cooling, beer coolers, cooling cabinets, wood-burning stoves, medical devices – all have different requirements for resistance to ambient influences. ACmaxx and GreenTech EC-compact fans offer the same features for protection against moisture, splash water and rough ambient conditions.

**Particular design features of the GreenTech EC-compact fan (ACi 4400):**

**GreenTech EC-compact fan is more compact!**

As large as existing AC fans – and not a bit larger. This is the most outstanding feature of the new GreenTech EC-compact fans ACi 4400. Even in the hub area, the fan does not differ from typical 119 x 119 x 38 mm AC fans. Out with the AC, in with the GreenTech EC-compact fans ACi 4400 – it's that simple.

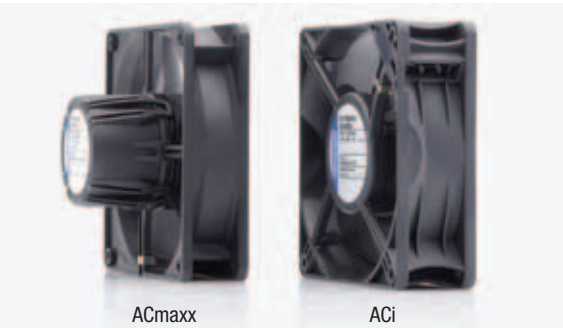

ACmaxx ACi

**GreenTech EC-compact fan is more efficient!**

ACmaxx saves energy, and the GreenTech EC-compact fan generation saves even more. While an AC fan at 50 Hz can barely reach an overall efficiency of 5-6%, the ACmaxx makes it to approx. 20-25%. With the new GreenTech EC-compact fans ACi 4400, a remarkable level of up to 30% is reached. This is the result of the optimisation of the entire package made up of drive, electronics, AC/DC conversion and aerodynamics. Thus the new GreenTech EC-compact fans series boasts energy savings of almost 75% compared to the corresponding AC fan, thus providing significantly-higher savings than the 40% level of the old AC 4300 generation.

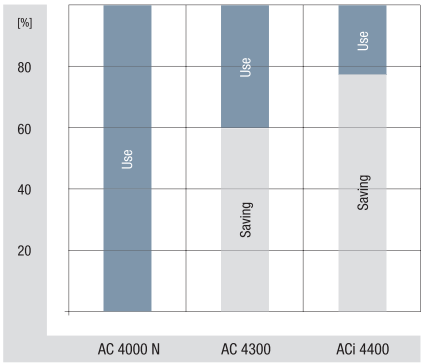


**GreenTech EC-compact fan is quieter!**

The GreenTech EC-compact fan ACi 4400 is quieter! Quieter than AC fans and quieter than the existing ACmaxx generation. The reason for this are the optimised aerodynamics and the drive, which is optimised for minimum structure-borne noise. Thus the fan is only half as loud at comparable air performance, and is up to 6 dB(A) quieter at some operating points.

**Speed independent of voltage and frequency**

For the GreenTech EC-compact fans ACi 4400, the speed, and thus the air flow and operating noise, are independent of the supply voltage and power frequency.

Versions are available for 115 VAC with a voltage range from 85 to 132 VAC and 230 VAC with a voltage range of 195 to 265 VAC. Voltage fluctuations and frequency differences in the power system are compensated for automatically.

# ACmaxx / GreenTech EC-compact fans

*Technical information*

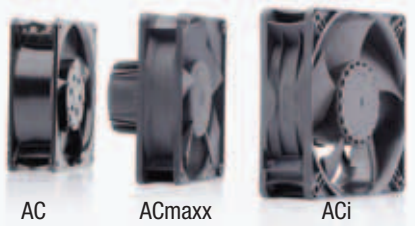


**Particular design features of the ACmaxx:**

**Prepared for all AC voltages**
These types have a very wide voltage range from 85 to 265 VAC – the global voltage range, so to speak. This enables the fan to be used around the world, opening up large savings potentials. In addition to reduced logistics effort and stock-keeping, worldwide availability is key. ACmaxx is compatible with every supply voltage–no switching needed. From 85 to 265 volts and mains frequencies of 50 and 60 hertz. Voltage fluctuations in the power system are automatically compensated for.

**Higher performance**
Unlike conventional AC technology, the state-of-the-art drive concept of this fan series is not linked to a fixed power frequency. This allows the motor speed to be increased over a wide range. Thus ACmaxx provides significantly higher air flow and significantly increased pressure.

**Higher flexibility**
The flexibility of ACmaxx is one-of-a-kind. With its intelligent features, ACmaxx can be individually adapted to the specific application: standby mode, overload mode at peak times or night reduction all the way to temperature-controlled quiet operation are all possible. From speed setting to long-term function checks using an alarm or speed signal outputs, ACmaxx offers optional interfaces that allow you to monitor operation quickly and easily.

You can find further information about these fan options in the "Specialised fans" chapter, starting on page 161.
Or you can simply contact our application engineers to discuss your ideal ACmaxx or GreenTech EC-compact fan.

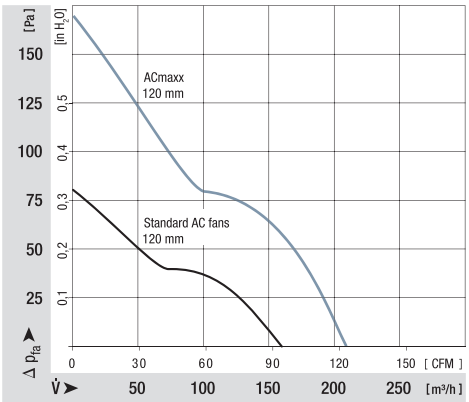

ebmpapst

# Fans for AC operation

## Overview of air performance

| Dimension | Series | Air flow | Page |
|---|---|---|---|
| mm | | m³/h | |
| □ 80 x 32 | AC 8300 H | 80 | 184 |
| □ 92 x 38 | AC 3200 J | 144 | 185 |
| □ 119 x 25 | AC 4400 FN | 205 | 186 |
| □ 119 x 32 | AC 4300 | 204 | 187 |
| □ 119 x 38 | ACi 4400 | 100...175 | 188 |
| Ø 130 | W1G 130 | 220...370 | 190 |
| Ø 172 x 51 | AC 6100 N | 350 | 192 |
| Ø 172 x 51 | AC 6200 N | 350 | 193 |
| Ø 200 | W3G 200 | 560...1000 | 194 |
| Ø 250 | W3G 250 | 900...1700 | 196 |
| Ø 98,5 x 130 | AC 100 NR | 80..105 | 198 |

Subject to alternations

## Overview of technically feasible designs

| Series | mm | Dimension | VDE, UL, CSA | Sintec sleeve bearings / ball bearings | Speed signal | Go / No-go alarm | Alarm with limit speed | External temperature sensor | Internal temperature sensor | PWM control input | Analogue control input | Multi-option control input | Humidity protection | IP >= IP 54 | IP >= IP 68 | Salt fog protection | Page |
|---|---|---|---|---|---|---|---|---|---|---|---|---|---|---|---|---|---|
| **ACmaxx / ACi Axial fans** | | | | | | | | | | | | | | | | | |
| Series | mm | | | | | | | OPTIONAL | | | | | | | | | p. |
| AC 8300 H | 80 x 80 x 32 | * | ■ | • | • | • | • | • | • | • | – | | • | • | – | • | 184 |
| AC 3200 J | 92 x 92 x 38 | * | ■ | • | • | • | • | • | • | • | – | | • | • | – | • | 185 |
| AC 4400 FN | 119 x 119 x 25 | * | ■ | • | • | • | • | • | • | • | – | | • | – | – | – | 186 |
| AC 4300 | 119 x 119 x 32 | * | ■ | • | • | • | • | • | • | • | – | | • | • | • | • | 187 |
| ACi 4400 | 119 x 119 x 38 | * | ■ | – | – | – | – | – | – | – | – | | • | • | – | • | 188 |
| AC 6100 N | Ø 172 x 51 | * | ■ | • | • | • | • | • | • | • | – | | • | – | – | – | 192 |
| AC 6200 N | Ø 172 x 51 | * | ■ | • | • | • | • | • | • | • | – | | • | • | – | • | 193 |
| AC 100 NR | Ø 100 x 130 | * | ■ | – | – | – | – | – | – | – | – | | • | • | – | – | 198 |

Subject to alternations

– not yet available
• available
□ Sleeve bearings
■ Ball bearings

* Partially granted, partially in registration stage.

Please note that these special versions are not possible for all voltages and speeds, and not in all combinations. The special versions are designed for specific customers and projects. As a rule they are not available off the shelf and are tied to minimum volumes.
Please consult your customer support representative about the feasibility of your special variant.

max. 80 m³/h

# ACmaxx axial fans

## Series AC 8300 H 80 x 80 x 32 mm

- **Material:** Housing: GRP[1)] (PBTP)
  Impeller: GRP[1)] (PA)
- **Direction of air flow:** Exhaust over struts
- **Direction of rotation:** Clockwise, seen on rotor
- **Connection:** Via single wires AWG 22, TR 64
- **Highlights:** Universally usable for all mains voltages between 85 and 265 VAC
- **Mass:** 325 g

- **Possible special versions:**
  (See chapter DC fans - specials)
  - Speed signal
  - Go / No-go alarm
  - Alarm with limit speed
  - External temperature sensor
  - Internal temperature sensor
  - PWM control input
  - Analogue control input
  - Protection against moisture
  - Protection against salt fog
  - Type of protection: IP 54

1) Fibreglass-reinforced plastic

| Nominal data | Air flow | Air flow | Nominal voltage | Frequency | Voltage range | Sound pressure level | Sound power level | Sintec sleeve bearings / Ball bearings | Input power | Nominal speed | Temperature range | Service life $L_{10}$ at 40 °C | at $T_{max}$ | Curve |
|---|---|---|---|---|---|---|---|---|---|---|---|---|---|---|
| **Type** | **m³/h** | **CFM** | **V** | **Hz** | **VAC** | **dB(A)** | **Bel(A)** | **□/■** | **Watts** | **rpm** | **°C** | **Hours** | **Hours** | |
| AC 8300 H | 80 | 47 | **115 / 230** | **50 / 60** | 85 ... 265 | 48 | 6,2 | /■ | 8,3 | 5 000 | -20...+75 | 55 000 / 25 000 | ① | |

Subject to alternations

Speed variants available on request.

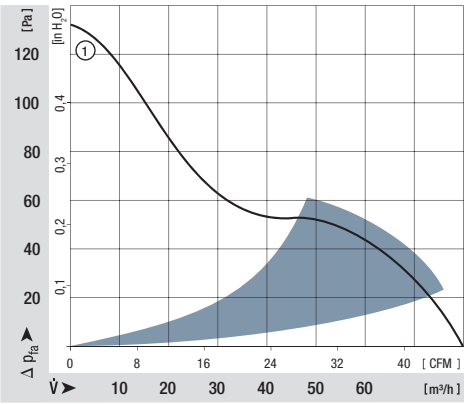


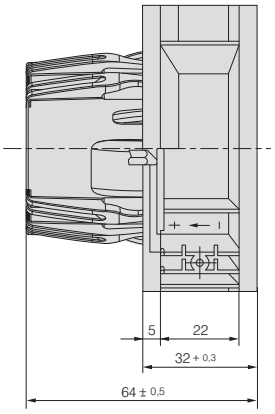


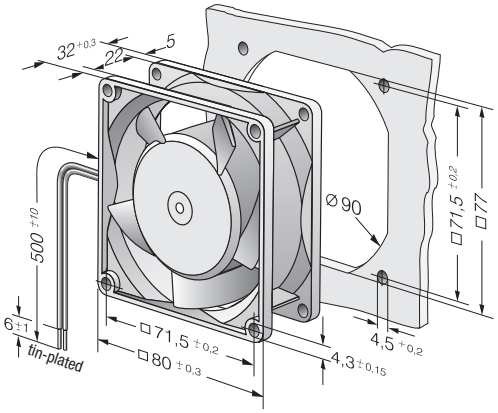




Guard grilles
p. 240

ebmpapst

max. 144 m³/h

# ACmaxx axial fans

## Series AC 3200 J 92 x 92 x 38 mm

- **Material:** Housing: GRP[1)] (PBTP)
  Impeller: GRP[1)] (PA)
- **Direction of air flow:** Exhaust over struts
- **Direction of rotation:** Clockwise, seen on rotor
- **Connection:** Via single wires AWG 22, TR 64
- **Highlights:** Universally usable for all mains voltages between 85 and 265 VAC
- **Mass:** 325 g

- **Possible special versions:**
  (See chapter DC fans - specials)
  - Speed signal
  - Go / No-go alarm
  - Alarm with limit speed
  - External temperature sensor
  - Internal temperature sensor
  - PWM control input
  - Analogue control input
  - Protection against moisture
  - Protection against salt fog
  - Type of protection: IP 54

1) Fibreglass-reinforced plastic

| Nominal data | Air flow | Air flow | Nominal voltage | Frequency | Voltage range | Sound pressure level | Sound power level | Sintec sleeve bearings / Ball bearings | Input power | Nominal speed | Temperature range | Service life $L_{10}$ at 40 °C | at $T_{max}$ | |
|---|---|---|---|---|---|---|---|---|---|---|---|---|---|---|
| **Type** | **m³/h** | **CFM** | **V** | **Hz** | **VAC** | **dB(A)** | **Bel(A)** | □/■ | **Watts** | **rpm** | **°C** | **Hours** | **Hours** | |
| AC 3200 JH | 144 | 85 | **115 / 230** | **50 / 60** | 85 ... 265 | 55 | 6,4 | /■ | 12 | 6 800 | -20...+70 | 70 000 / 35 000 | | ① |

Subject to alternations

Speed variants available on request.

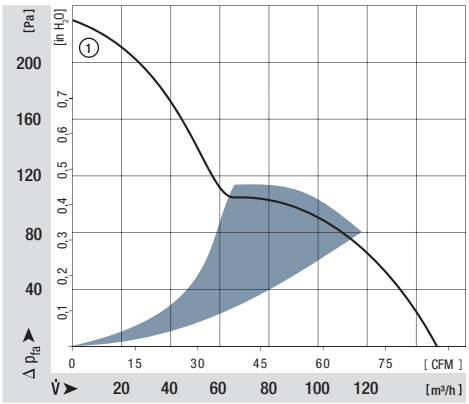


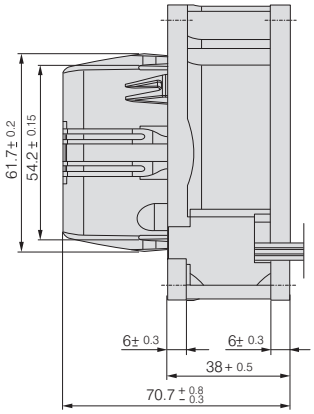


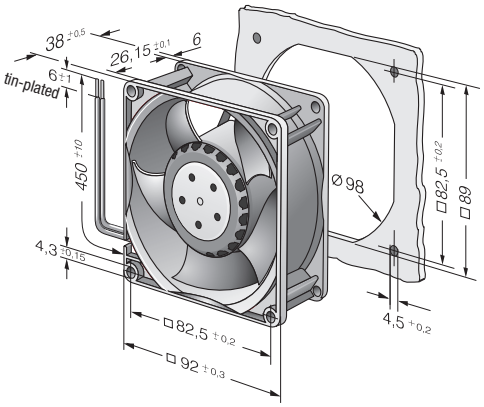

max. 205 m³/h

# ACmaxx axial fans

## Series AC 4400 FN 119 x 119 x 25 mm

- **Material:** Housing: GRP[1)] (PBTP)
  Impeller: GRP[1)] (PA)
- **Direction of air flow:** Exhaust over struts
- **Direction of rotation:** Counter-clockwise, seen on rotor
- **Connection:** Via single wires AWG 22, TR 64
- **Highlights:** Universally usable for all mains voltages between 85 and 265 VAC
- **Mass:** 370 g

- **Possible special versions:**
  (See chapter DC fans - specials)
  - Speed signal
  - Go / No-go alarm
  - Alarm with limit speed
  - External temperature sensor
  - Internal temperature sensor
  - PWM control input
  - Analogue control input
  - Protection against moisture

1) Fibreglass-reinforced plastic

| Nominal data | Air flow | Air flow | Nominal voltage | Frequency | Voltage range | Sound pressure level | Sound power level | Sintec sleeve bearings / Ball bearings | Input power | Nominal speed | Temperature range | Service life $L_{10}$ at 40 °C | at $T_{max}$ | |
|---|---|---|---|---|---|---|---|---|---|---|---|---|---|---|
| **Type** | **m³/h** | **CFM** | **V** | **Hz** | **VAC** | **dB(A)** | **Bel(A)** | □ / ■ | **Watts** | **rpm** | **°C** | **Hours** | **Hours** | |
| AC 4400 FNN | 205 | 121 | **115 / 230** | **50 / 60** | 85 ... 265 | 53 | 6,2 | / ■ | 12 | 4 850 | -20...+70 | 60 000 / 30 000 | | ① |

Subject to alternations

Speed variants available on request.

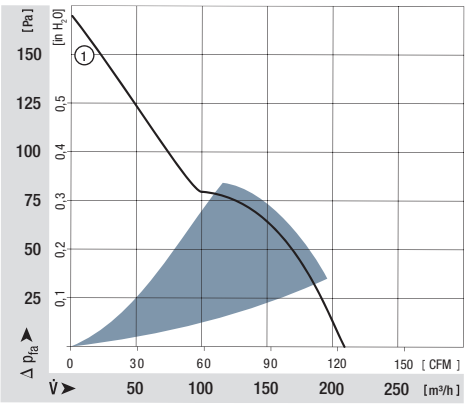


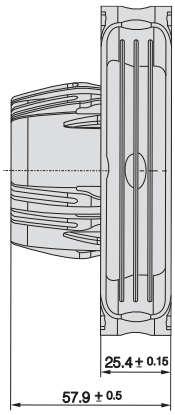


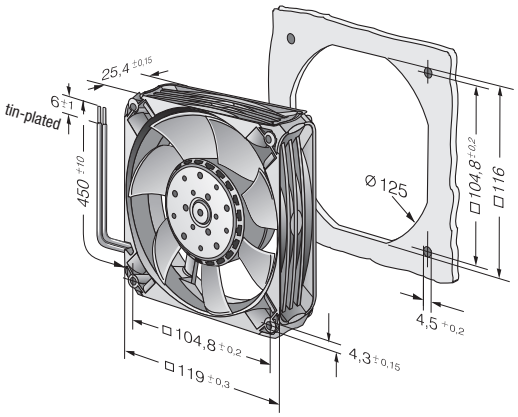




Guard grilles
p. 240

ebmpapst

max. 204 m³/h

# ACmaxx axial fans

## Series AC 4300 119 x 119 x 32 mm

- **Material:** Housing: GRP[1)] (PBTP)
  Impeller: GRP[1)] (PA)
- **Direction of air flow:** Exhaust over struts
- **Direction of rotation:** Clockwise, seen on rotor
- **Connection:** Via single wires AWG 22, TR 64
- **Highlights:** Universally usable for all mains voltages between 85 and 265 VAC
- **Mass:** 325 g

- **Possible special versions:**
  (See chapter DC fans - specials)
  - Speed signal
  - Go / No-go alarm
  - Alarm with limit speed
  - External temperature sensor
  - Internal temperature sensor
  - PWM control input
  - Analogue control input
  - Protection against moisture
  - Protection against salt fog
  - Type of protection: IP 54 / IP 68

1) Fibreglass-reinforced plastic

| Nominal data | Air flow | Air flow | Nominal voltage | Frequency | Voltage range | Sound pressure level | Sound power level | Sintec sleeve bearings / Ball bearings | Input power | Nominal speed | Temperature range | Service life $L_{10}$ at 40 °C | at $T_{max}$ | Kennlinie |
|---|---|---|---|---|---|---|---|---|---|---|---|---|---|---|
| **Type** | **m³/h** | **CFM** | **V** | **Hz** | **VAC** | **dB(A)** | **Bel(A)** | **□ / ■** | **Watts** | **rpm** | **°C** | **Hours** | **Hours** | |
| AC 4300 H | 204 | 120 | **115 / 230** | **50 / 60** | 85 ... 265 | 51 | 6,4 | / ■ | 12 | 3 400 | -20...+70 | 45 000 / 22 500 | ① |

Subject to alternations

Speed variants available on request.

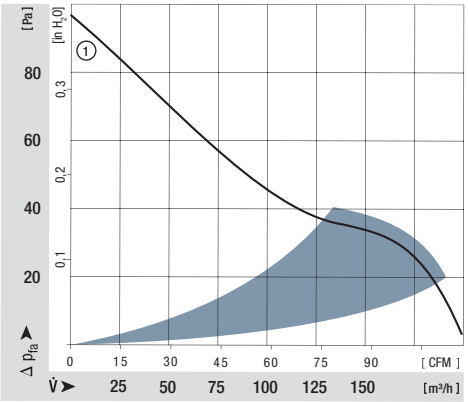


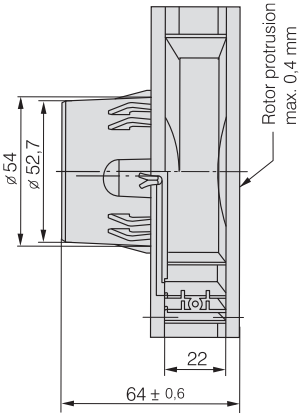


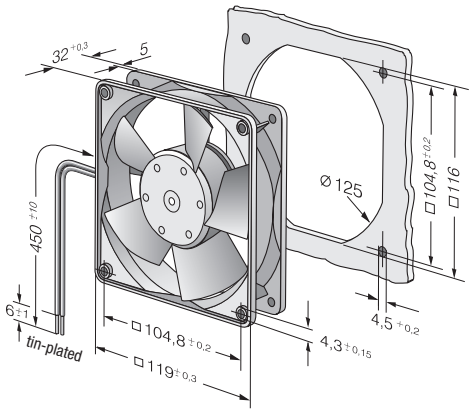

max. 175 m³/h

# GreenTech EC-Compact fan axial fans

## Series ACi 4400 119 x 119 x 38 mm

- **Material:** Housing: GRP[1)] (PBT)
  Impeller: GRP[1)] (PA)
- **Direction of air flow:** Exhaust over struts
- **Direction of rotation:** Clockwise, seen on rotor
- **Connection:** via 2 flat plugs 2,8 x 0,5 mm
  flying leads optional
- **Highlights:** Fully integrated converter
  and fan electronics
- **Mass:** 250 g

- **Possible special versions:**
  (See chapter DC fans - specials)
  - Protection against moisture
  - Protection against salt fog
  - Type of protection: IP 54

1) Fibreglass-reinforced plastic

| Nominal data | Air flow | Air flow | **Nominal voltage** | Voltage range | Sound pressure level | Sound power level | Sintec sleeve bearings Ball bearings | Input power | Nominal speed | Temperature range | Service life $L_{10}$ (40 °C) ebm-papst Standard | Service life $L_{10}$ ($T_{max}$) ebm-papst Standard | Life expectancy $L_{10IPC}$ (40 °C) see page 17 | Curve |
|---|---|---|---|---|---|---|---|---|---|---|---|---|---|---|
| **Type** | **m³/h** | **CFM** | **VDC** | **VDC** | **dB(A)** | **Bel(A)** | □/■ | **Watts** | **rpm** | **°C** | **Hours** | | **Hours** | |
| ACi 4420 ML | 100 | 59 | **230** | 195...265 | 25 | 4,1 | ■ | 1,4 | 1 850 | -20...+75 | 65 000 / 25 000 | | 110 000 | ① |
| ACi 4420 N | 147 | 86 | **230** | 195...265 | 36 | 4,9 | ■ | 2,8 | 2 700 | -20...+75 | 65 000 / 25 000 | | 110 000 | ② |
| ACi 4420 H | 160 | 94 | **230** | 195...265 | 39 | 5,1 | ■ | 3,3 | 3 000 | -20...+75 | 65 000 / 25 000 | | 110 000 | ③ |
| ACi 4420 HH | 175 | 106 | **230** | 195...265 | 42 | 5,3 | ■ | 4,4 | 3 300 | -20...+75 | 65 000 / 25 000 | | 110 000 | ④ |
| ACi 4410 HH | 175 | 106 | **115** | 85...132 | 42 | 5,3 | ■ | 4,4 | 3 300 | -20...+75 | 65 000 / 25 000 | | 110 000 | ④ |

Subject to alternations

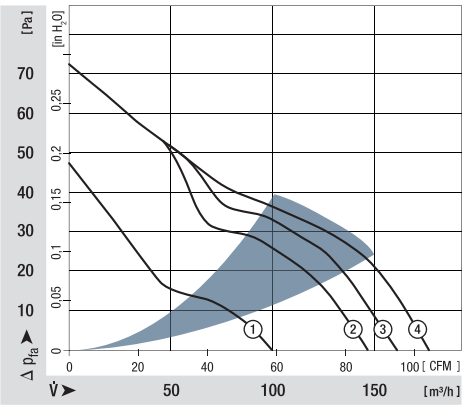


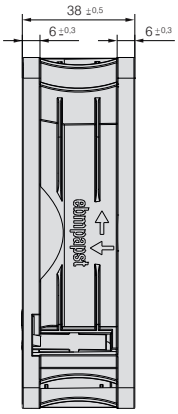


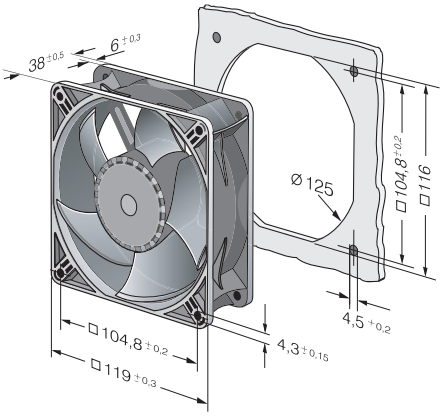




Guard grilles
p. 240

Connection cables
p. 251

ebmpapst

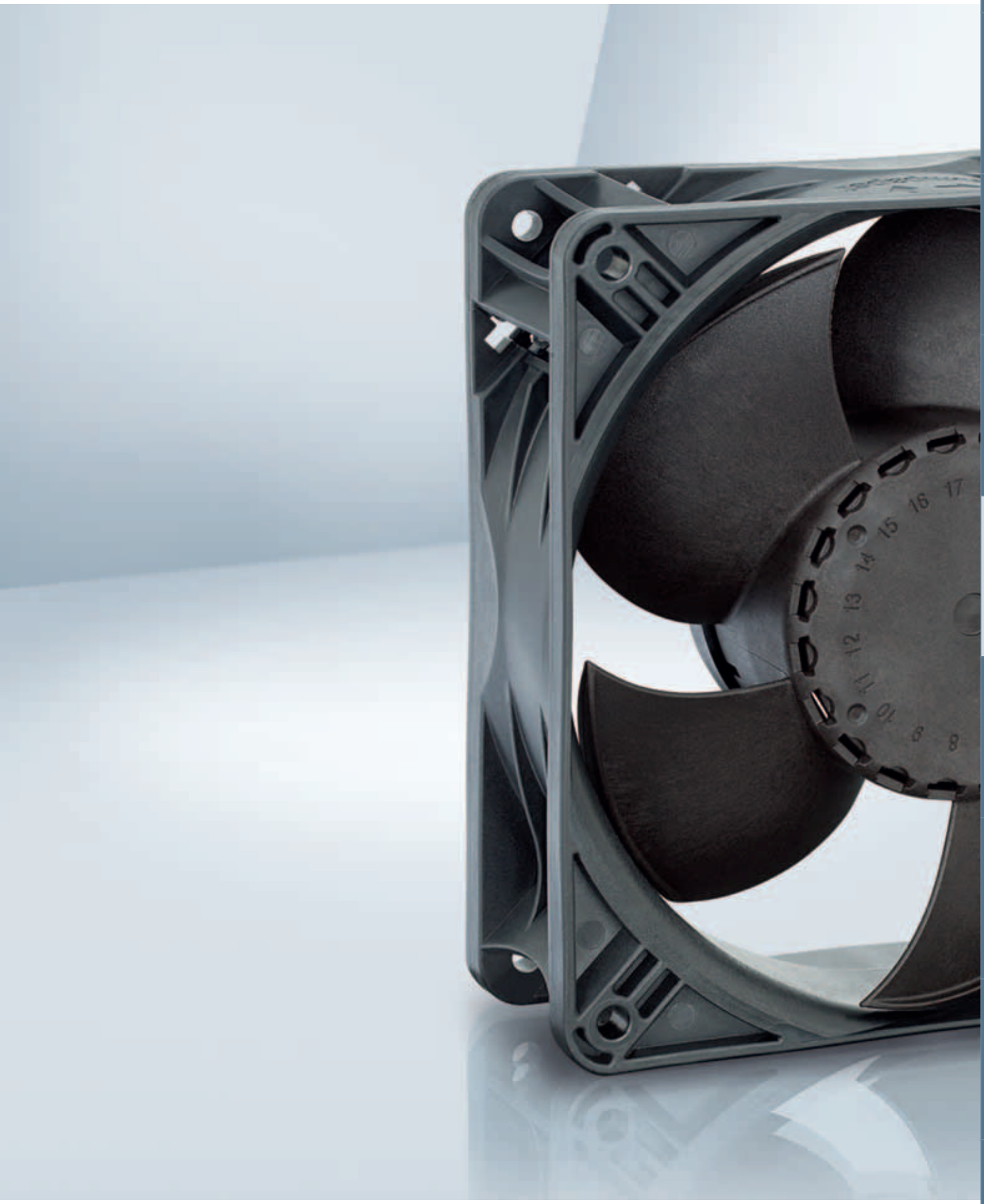

max. 370 m³/h

# Energy-saving axial fans

## Ø 130 mm

- **Material:** Wall ring: Plastic PP, fibreglass-reinforced
  Blades: Plastic PA, fibreglass-reinforced
- **Number of blades:** 7
- **Direction of air flow:** "V", exhaust over struts
- **Direction of rotation:** Counter-clockwise, seen on rotor
- **Type of protection:** IP 54
- **Insulation class:** "B"
- **Mounting position:** Any
- **Condensate discharges:** None
- **Operation mode:** Continuous operation (S1)
- **Bearings:** Maintenance-free ball bearings

**Nominal data**

| Type | Motor | Curve | Nominal voltage VAC | Frequency Hz | Speed / rpm[1] rpm | Max.input power[1] W | Max.current draw[1] A | Max. back-pressure Pa | Perm. amb. temp. °C | Mass kg | Electrical connections |
|---|---|---|---|---|---|---|---|---|---|---|---|
| **W1G130-AA49 -01** | M1G 055-AI | A | 1~ 115 | 50/60 | 3200 | 24 | 0,38 | 90 | -30..+60 | 0,75 | p. 259 / J7) |
| **W1G130-AA25 -01** | M1G 055-AI | B | 1~ 230 | 50/60 | 3200 | 24 | 0,19 | 90 | -30..+70 | 0,75 | p. 259 / J7) |

Subject to alternations

[1] Nominal data in operating point with maximum load and 115 or 230 VAC

**Curve:**

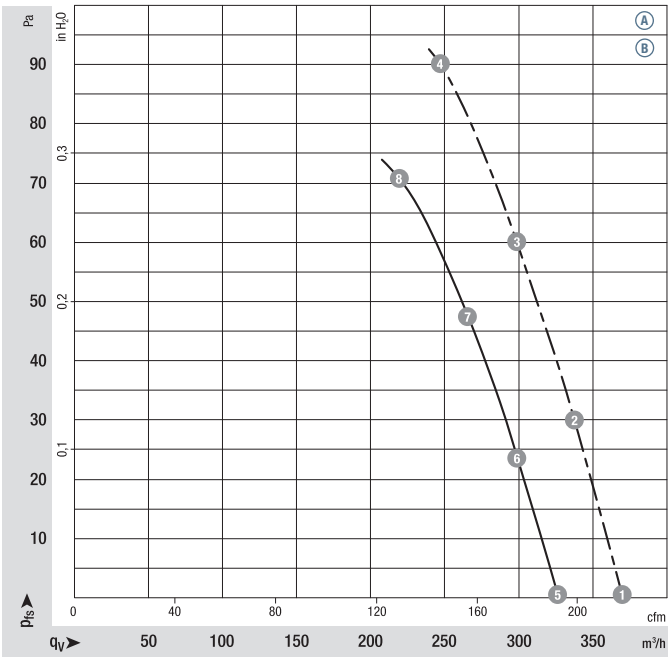


— – — $n_{max.}$ = 3200 min⁻¹ ——— n = 2800 min⁻¹ $n_{min.}$ = 1100 min⁻¹

| | | n rpm | $P_{ed}$ W | I A | $L_WA$ dB(A) |
|---|---|---|---|---|---|
| A | 1 | 3200 | 23 | 0,38 | 63 |
| A | 2 | 3200 | 24 | 0,38 | 61 |
| A | 3 | 3200 | 24 | 0,38 | 60 |
| A | 4 | 3200 | 24 | 0,38 | 63 |
| A | 5 | 2800 | 16 | 0,26 | 60 |
| A | 6 | 2800 | 16 | 0,26 | 58 |
| A | 7 | 2800 | 16 | 0,26 | 57 |
| A | 8 | 2800 | 16 | 0,26 | 60 |
| B | 1 | 3200 | 23 | 0,19 | 63 |
| B | 2 | 3200 | 24 | 0,19 | 61 |
| B | 3 | 3200 | 24 | 0,19 | 60 |
| B | 4 | 3200 | 24 | 0,19 | 63 |
| B | 5 | 2800 | 16 | 0,13 | 60 |
| B | 6 | 2800 | 16 | 0,13 | 58 |
| B | 7 | 2800 | 16 | 0,13 | 57 |
| B | 8 | 2800 | 16 | 0,13 | 60 |

Air performance measured as per: ISO 5801, Installation category A, with ebm-papst inlet nozzle without protection against accidental contact. Suction-side noise levels: LWA as per ISO 13347, LpA measured at 1 m distance to fan axis. The acoustic values given are only valid under the measurment conditions listed and may vary depending on the installation situation. With any deviation to the standard setup, the specific values have to be checked and reviewed once installed or fitted! For detailed information see http://www.ebmpapst.com/general conditions



ebmpapst

- **Motor protection:** Via electronics and TOP
- **Electrical connection:** Plug-in connection on motor side
- **Protection class:** II
- **Product conforming to standards:** CE; EN 60335-1
- **Approvals:** VDE, UL, CSA, GOST are applied for
- **Speed:** Using the programming unit 2 speeds between $n_{min}$ and $n_{max}$ can be programmed

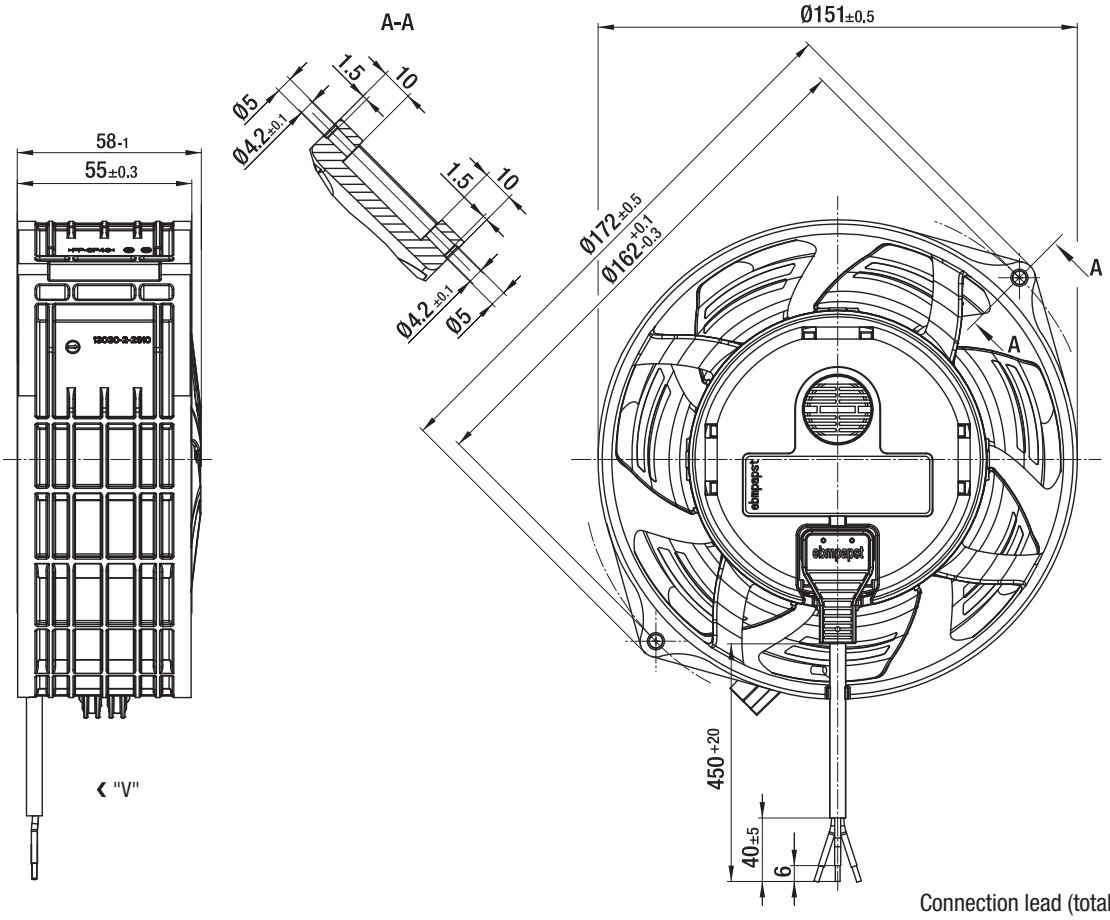


Connection lead (total length 450 mm) is fitted ex works and can be detached.

max. 350 m³/h

# ACmaxx axial fans

## Series AC 6100 N 172 x 160 x 51 mm

- **Material:** Housing: GRP[1)] (PA)
  Impeller: GRP[1)] (PA)
- **Direction of air flow:** Exhaust over struts
- **Direction of rotation:** Counter clockwise, seen on rotor
- **Connection:** Via single wires AWG 22, TR 64
- **Highlights:** Universally usable for all mains voltages between 85 and 265 VAC, 50-60 Hz
- **Mass:** 760 g

- **Possible special versions:**
  (See chapter DC fans - specials)
  - Speed signal
  - Go / No-go alarm
  - Alarm with limit speed
  - External temperature sensor
  - Internal temperature sensor
  - PWM control input
  - Analogue control input
  - Protection against moisture

1) Fibreglass-reinforced plastic

| Nominal data | Air flow | Air flow | Nominal voltage | Frequency | Voltage range | Sound pressure level | Sound power level | Sintec sleeve bearings / Ball bearings | Input power | Nominal speed | Temperature range | Service life $L_{10}$ at 40 °C | at $T_{max}$ | Curve |
|---|---|---|---|---|---|---|---|---|---|---|---|---|---|---|
| **Type** | **m³/h** | **CFM** | **V** | **Hz** | **VAC** | **dB(A)** | **Bel(A)** | □/■ | **Watts** | **rpm** | **°C** | **Hours** | **Hours** | |
| AC 6100 NM | 350 | 206 | **115 / 230** | **50 / 60** | 85 ... 265 | 52 | 6,1 | /■ | 14 | 2 850 | -20...+70 | 80 000 / 37 500 | | ① |
| Subject to alternations | | | | | | | | | | | | | | |

Speed variants available on request.

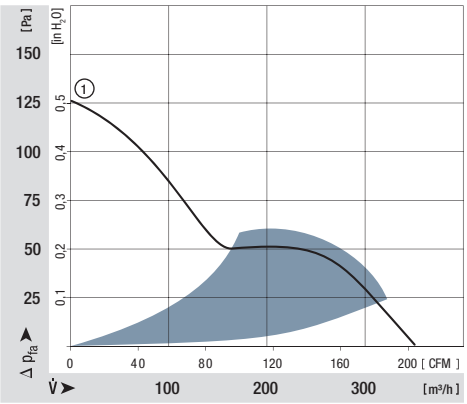


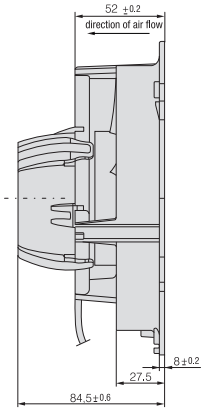


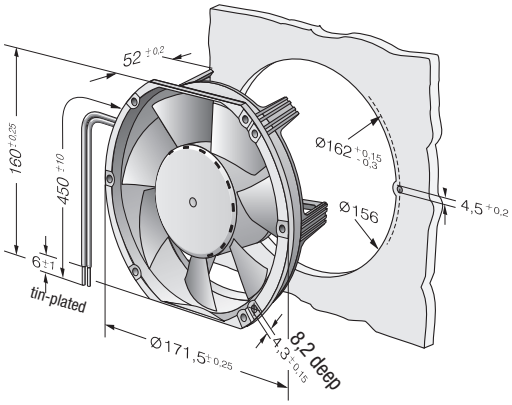




Guard grilles
p. 240

ebmpapst

max. 350 m³/h

# ACmaxx axial fans

## Series AC 6200 N Ø 172 x 51 mm

- **Material:** Housing: Die-cast aluminium
  Impeller: GRP[1] (PA)
- **Direction of air flow:** Exhaust over struts
- **Direction of rotation:** Counter clockwise, seen on rotor
- **Connection:** Via single wires AWG 22, TR 64
- **Highlights:** Universally usable for all mains voltages between 85 and 265 VAC, 50-60 Hz
  Housing with grounding lug for screw M4 x 8 (Torx)
- **Mass:** 900 g

1) Fibreglass-reinforced plastic

- **Possible special versions:**
  (See chapter DC fans - specials)
  - Speed signal
  - Go / No-go alarm
  - Alarm with limit speed
  - External temperature sensor
  - Internal temperature sensor
  - PWM control input
  - Analogue control input
  - Protection against moisture
  - Protection against salt fog
  - Type of protection: IP 54

| Nominal data | Air flow | Air flow | Nominal voltage | Frequency | Voltage range | Sound pressure level | Sound power level | Sintec sleeve bearings / Ball bearings | Input power | Nominal speed | Temperature range | Service life $L_{10}$ at 40 °C | at $T_{max}$ | Curve |
|---|---|---|---|---|---|---|---|---|---|---|---|---|---|---|
| **Type** | **m³/h** | **CFM** | **V** | **Hz** | **VAC** | **dB(A)** | **Bel(A)** | □/■ | **Watts** | **rpm** | **°C** | **Hours** | **Hours** | |
| AC 6200 NM | 350 | 206 | **115 / 230** | **50 / 60** | 85 ... 265 | 50 | 5,7 | /■ | 14 | 2 850 | -20...+70 | 80 000 / 40 000 | | ① |

Subject to alternations

Speed variants available on request.

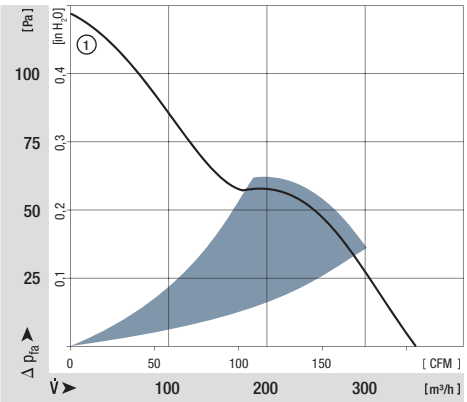


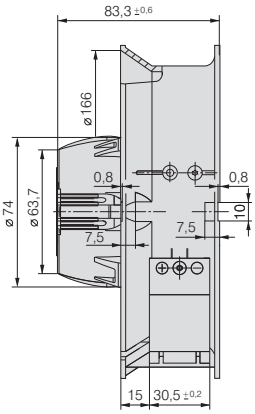


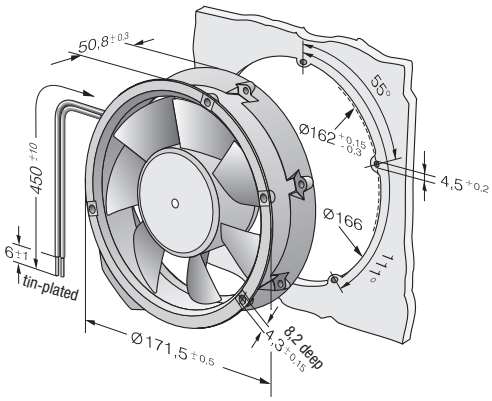

max. 1000 m³/h

# EC axial fans

## Ø 200 mm

- **Material:** Wall ring: Die-cast aluminium
  Blades: Plastic PP
  Rotor: Thick layer passivated
- **Number of blades:** 7
- **Direction of air flow:** "V", exhaust over struts
- **Direction of rotation:** Counter-clockwise, seen on rotor
- **Type of protection:** IP 54
- **Insulation class:** "B"
- **Mounting position:** Any
- **Condensate discharges:** None, open rotor
- **Operation mode:** Continuous operation (S1)
- **Bearings:** Maintenance-free ball bearings

**Nominal data**

| Type | Motor | Curve | Nominal voltage VAC | Frequency Hz | Speed / rpm[1] rpm | Max. input power[1] W | Max. current draw[1] A | Max. back-pressure Pa | Perm. amb. temp. °C | Mass kg | Technical features and electrical connection |
|---|---|---|---|---|---|---|---|---|---|---|---|
| W3G200-HD01 -01 | M3G 055-BD | A | 1~ 230 | 50/60 | 2900 | 54 | 0,55 | 96 | -25..+60 | 1,6 | p. 256 / H3) |
| W3G200-HD01 -03 | M3G 055-BD | B | 1~ 230 | 50/60 | 2900 | 54 | 0,55 | 96 | -25..+60 | 1,7 | p. 257 / H4) |

Subject to alternations

[1] Nominal data in operating point with maximum load and 230 VAC

**Curve:**

- A **2 Speed stages**
- B **Speed-controlled**

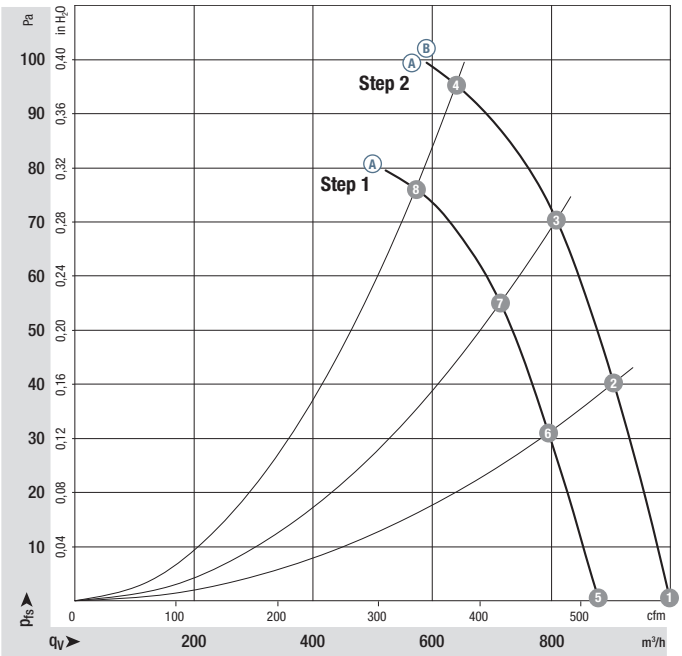


| | | n rpm | $P_{ed}$ W | I A | $L_WA$ dB(A) |
|---|---|---|---|---|---|
| A | 1 | 2970 | 50 | 0,49 | 65 |
| A | 2 | 2890 | 54 | 0,53 | 64 |
| A | 3 | 2830 | 58 | 0,56 | 65 |
| A | 4 | 2900 | 54 | 0,55 | 70 |
| A | 5 | 2645 | 36 | 0,37 | 62 |
| A | 6 | 2575 | 39 | 0,40 | 61 |
| A | 7 | 2530 | 42 | 0,42 | 62 |
| A | 8 | 2500 | 43 | 0,43 | 67 |
| B | 1 | 2970 | 50 | 0,49 | 65 |
| B | 2 | 2890 | 54 | 0,53 | 64 |
| B | 3 | 2830 | 58 | 0,56 | 65 |
| B | 4 | 2900 | 54 | 0,55 | 70 |

Air performance measured as per: ISO 5801, Installation category A, without protection against accidental contact. Suction-side noise levels: LWA as per ISO 13347, LpA measured at 1 m distance to fan axis. The acoustic values given are only valid under the measurment conditions listed and may vary depending on the installation situation. With any deviation to the standard setup, the specific values have to be checked and reviewed once installed or fitted! For detailed information see http://www.ebmpapst.com/general conditions



ebmpapst

- **Technical features:** See electrical connections p. 256/257
- **EMC:** Interference immunity acc. to EN 61000-6-2 (industrial environment)
  Harmonics acc. to EN 61000-3-2/3
  Interference emission acc. to EN 55022 (class B, household environment)
  On account of the installation conditions, ferritic damping in the connection line may be required for the application.
- **Touch current:** <= 3.5 mA acc. to IEC 60990 (test circuit, illustration 4)
- **Electrical connection** Via terminal strip
- **Protection class:** I (if customer has provided connection for protective earth)
- **Product conforming to standards:** EN 60335-1, CE
- **Approvals:** $cUR_{US}$

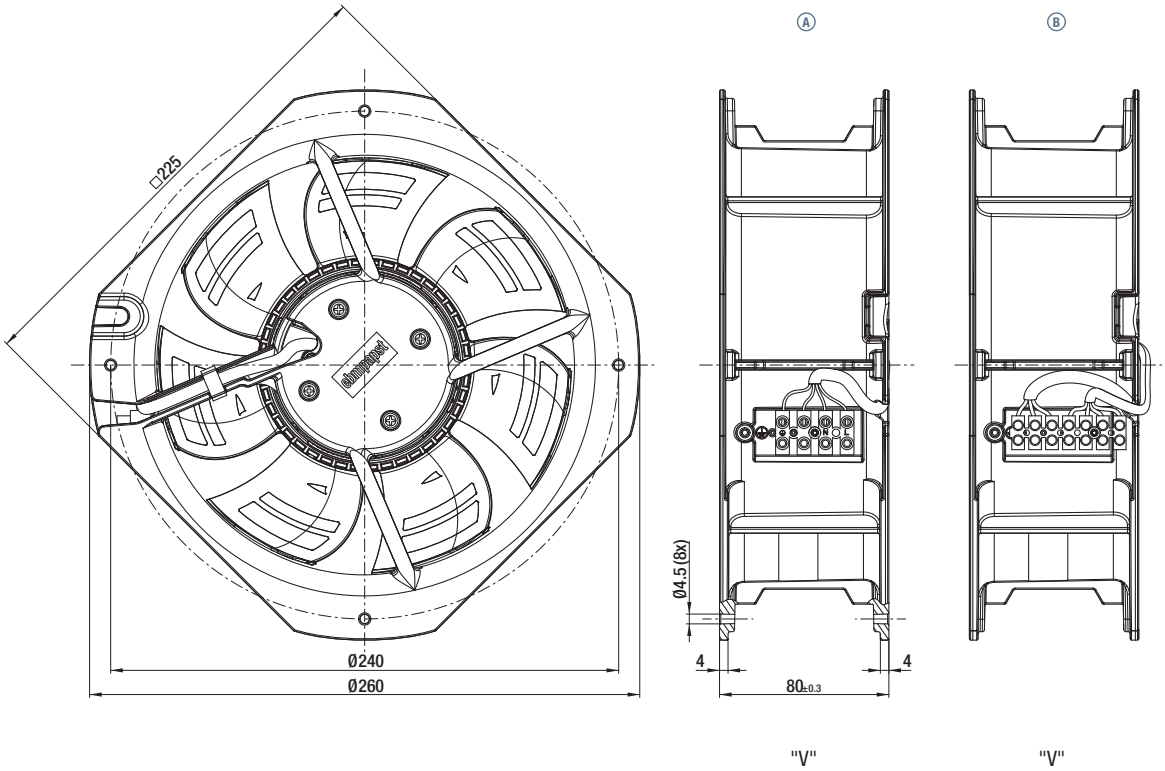

max. 1700 m³/h

# EC axial fans

## Ø 250 mm

- **Material:** Wall ring: Die-cast aluminium
  Blades: Plastic PP
  Rotor: Thick layer passivated
- **Number of blades:** 7
- **Direction of air flow:** "V", exhaust over struts
- **Direction of rotation:** Counter-clockwise, seen on rotor
- **Type of protection:** IP 54
- **Insulation class:** "B"
- **Mounting position:** Any
- **Condensate discharges:** None, open rotor
- **Operation mode:** Continuous operation (S1)
- **Bearings:** Maintenance-free ball bearings

**Nominal data**

| Type | Motor | Curve | Nominal voltage VAC | Frequency Hz | Speed / rpm[1] rpm | Max. input power[1] W | Max. current draw[1] A | Max. back-pressure Pa | Perm. amb. temp. °C | Mass kg | Technical features and electrical connection |
|---|---|---|---|---|---|---|---|---|---|---|---|
| **W3G250-HH07 -01** | M3G 055-CF | A | 1~ 230 | 50/60 | 2330 | 83 | 0,72 | 100 | -25...+60 | 2,0 | p. 256 / H3) |
| **W3G250-HH07 -03** | M3G 055-CF | B | 1~ 230 | 50/60 | 2330 | 83 | 0,72 | 100 | -25...+60 | 2,1 | p. 257 / H4) |

Subject to alternations

[1] Nominal data in operating point with maximum load and 230 VAC

**Curve:**

- A **2 Speed stages**
- B **Speed-controlled**

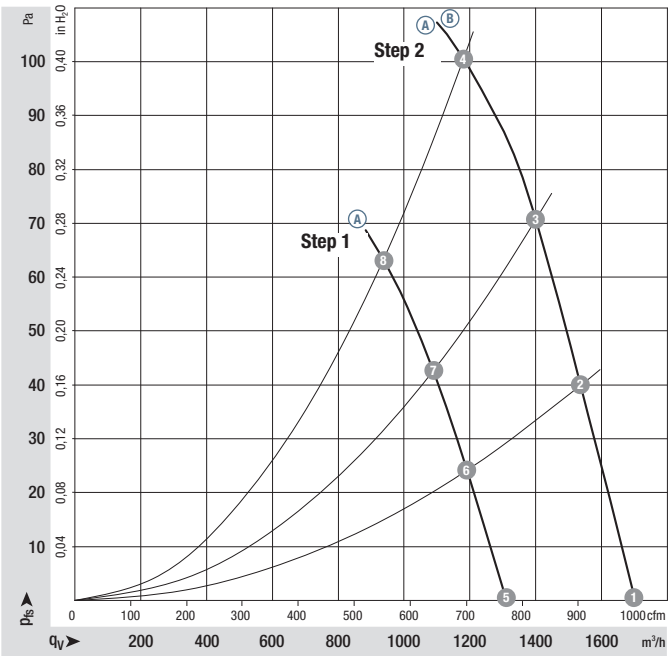


| | | n rpm | $P_{ed}$ W | I A | $L_WA$ dB(A) |
|---|---|---|---|---|---|
| A | 1 | 2465 | 67 | 0,59 | 69 |
| A | 2 | 2410 | 75 | 0,65 | 69 |
| A | 3 | 2375 | 80 | 0,68 | 68 |
| A | 4 | 2330 | 83 | 0,72 | 69 |
| A | 5 | 1900 | 33 | 0,33 | 63 |
| A | 6 | 1880 | 37 | 0,37 | 63 |
| A | 7 | 1860 | 40 | 0,38 | 62 |
| A | 8 | 1850 | 42 | 0,40 | 63 |
| B | 1 | 2465 | 67 | 0,59 | 69 |
| B | 2 | 2410 | 75 | 0,65 | 69 |
| B | 3 | 2375 | 80 | 0,68 | 68 |
| B | 4 | 2330 | 83 | 0,72 | 69 |

Air performance measured as per: ISO 5801, Installation category A, without protection against accidental contact. Suction-side noise levels: LWA as per ISO 13347, LpA measured at 1 m distance to fan axis. The acoustic values given are only valid under the measurment conditions listed and may vary depending on the installation situation. With any deviation to the standard setup, the specific values have to be checked and reviewed once installed or fitted! For detailed information see http://www.ebmpapst.com/general conditions



ebmpapst

- **Technical features:** See electrical connections p. 256/257
- **EMC:** Interference immunity acc. to EN 61000-6-2 (industrial environment)
  Harmonics acc. to EN 61000-3-2/3
  Interference emission acc. to EN 55022 (class B, household environment)
  On account of the installation conditions, ferritic damping in the connection line may be required for the application.
- **Touch current:** <= 3.5 mA acc. to IEC 60990 (test circuit, illustration 4)
- **Electrical connection** Via terminal strip
- **Protection class:** I (if customer has provided connection for protective earth)
- **Product conforming to standards:** EN 60335-1, CE
- **Approvals:** $cUR_{US}$

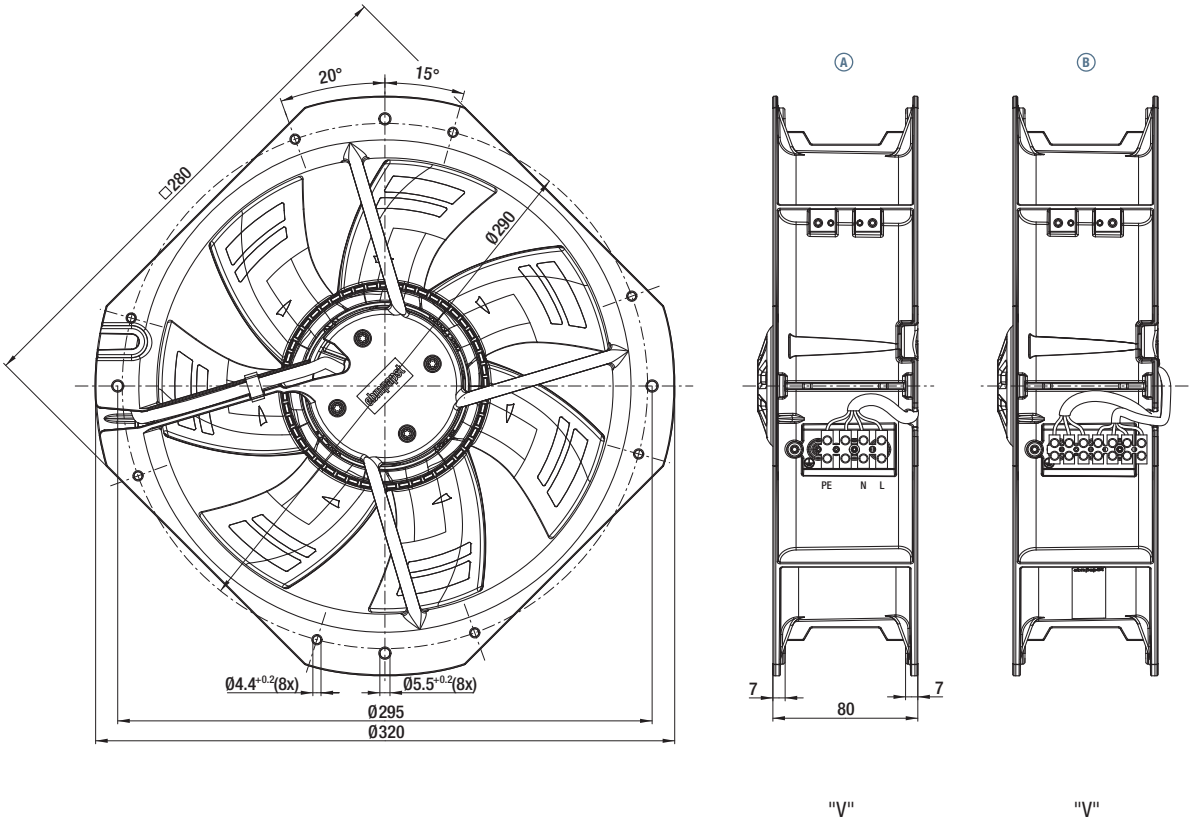

max. 105 m³/h

# ACmaxx in-line duct fan

## Series AC 100 NR Ø 98,5 x 130 mm

- **Material:** Housing: GRP[1)] (PBT)
  Impeller: GRP[1)] (PA)
- **Direction of air flow:** Intake over struts
- **Direction of rotation:** Clockwise, seen on rotor
- **Connection:** Via 3-pin Europa terminal strip max. 1,5 mm²
- **Highlights:** Universally usable for all mains voltages between 85 and 265 VAC, 50-60 Hz
  Boost function
  Vibration-isolated motor
- **Mass:** 400 g

1) Fibreglass-reinforced plastic

- **Possible special versions:**
  (See chapter DC fans - specials)
  - Protection against moisture
  - Type of protection: IP 44 (IP 45 possible depending on mounting position)

| Nominal data | | Air flow | Air flow | Nominal voltage | Frequency | Voltage range | Sound pressure level | Sound power level | Sintec sleeve bearings / Ball bearings | Input power | Nominal speed | Temperature range | Service life $L_{10}$ at 40 °C | at $T_{max}$ | Curve |
|---|---|---|---|---|---|---|---|---|---|---|---|---|---|---|---|
| Type | | m³/h | CFM | V | Hz | VAC | dB(A) | Bel(A) | □/■ | Watts | rpm | °C | Hours | Hours | |
| nominal | AC 100 NR | 80 | 47 | 115/230 | 50-60 | 85...265 | 35 | 4,7 | ■ | 2,5 | 2 750 | -10...+55 | 70 000 / 40 000 | | ① |
| boost | | 105 | 62 | | | | 42 | 5,3 | | 4,5 | 3 500 | | | | ② |

Subject to alternations

**Optional:** Max. speed up to 135 m³/h (Curve 3).

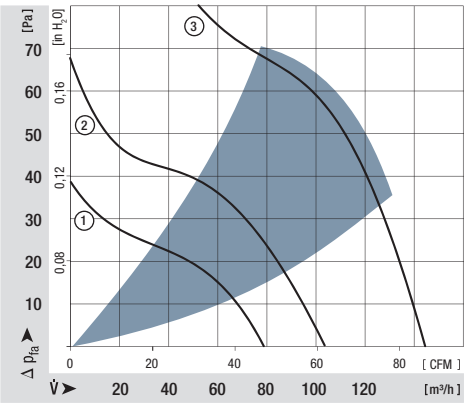


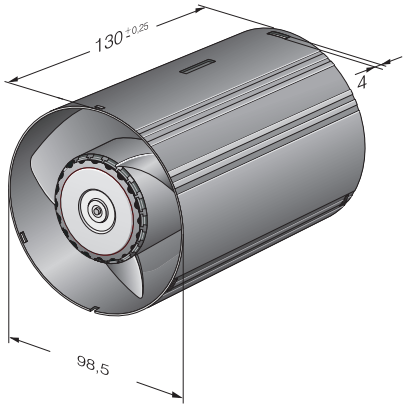




ebmpapst

| | |
|---|---|
| **Highest energy efficiency:** | 0.03 - 0.045 W/m³/h free air (Specific fan power). |
| **Boost speed setting:** | 2 speed settings possible via boost function. |
| **Vibration isolation:** | Reduced transmission of vibrations from motor to housing. |
| **Intelligence:** | Speed settings and control outputs optional. |

## Connection

**Example 1:**
Continuous operation at nominal speed boost speed via light switch.

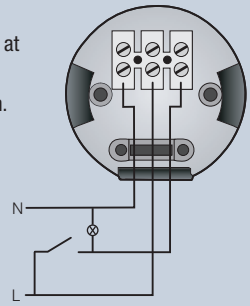


**Example 2:**
Nominal speed via light switch, separate boost switch.

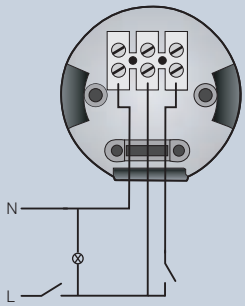


**Example 3:**
Simple connection, nominal speed without switching.

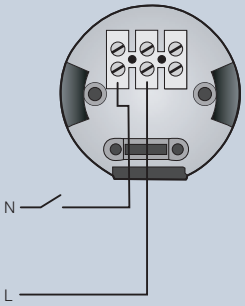


**Example 4**:
Simple connection, boost speed without switching.

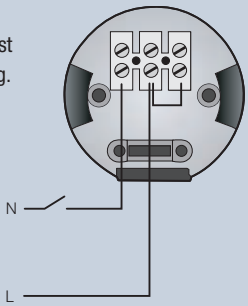


## Scope of delivery

# AC axial fans

AC axial fan overview 203
AC axial fans 204

# AC axial fans

*Technical information*

**Product line**
The renowned ebm-papst AC fans are used when DC voltage is not available. The AC range of fans is based on experience gained from decades of development activity, millions of units in series production and competence in innovation of a world-wide technological leader.

A wide range of fans for AC operation is presented in this catalogue. In addition to complete device fans, you will also find fans without external housing, providing a particularly economical advantage when the air duct can be integrated in the respective device.

**Variety of sizes**
AC fans are available in a variety of sizes with either air exhaust or air intake over struts. Silent running models with sleeve bearings (or for extreme ambient conditions) fans with ball bearings are available. Electrical connection with plug connection or external leads are available.

**Shaded-pole or capacitor motors**
Fan drives by shaded-pole or capacitor motors, most of which incorporate the world-famous ebm-papst external rotor principle: The fan blades are directly attached to the external rotor of the external rotor motor, thus combining both high performance and profitability.

**Flat built AC fans**
ebm-papst also has particularly flat built AC fans with internal rotor motor. Their advantage: quick start to full speed. A plastic impeller and the both smaller and lighter internal rotor motor lead to a lower moment of inertia.

**Bearings**
AC fans with sleeve bearings are powered by Class E insulated motors. Fans with ball bearings are equipped with Class B, E or F insulated motors.

**Type of protection**
All fans are equipped with type of protection IP 20 as standard.
IP 54 / IP 68 and further types of protection are available on request.

**AC voltage**
The line of AC fans for Euro voltage according
to IEC 60038 (230 V + 6 %, -10 %) is basically also available for 115 V.

**Frequencies**
AC fans can be operated at frequencies of 50 Hz or 60 Hz. However, their technical data then changes accordingly.

**Capacitor**
Fans driven by capacitor external motors
provide particularly high operating efficiency. Generally, the required operating capacitor is already integrated in the fan housing.

**Overloading**
Almost all AC fans are protected against overloading (e.g. due to locked rotor) the drive motors are either impedance protected (marked “Impedance protected”, and/or “Z.P.”) or are equipped with a thermal switch (marked “Thermally protected” or “Th.P.”). The model designation of these fans ends with “S”.

# Axial fans for AC operation

## Overview of air performance

| Dimension | Series | Air flow | Page |
|---|---|---|---|
| mm | | m³/h | |
| □ 80 x 38 | 8000 N | 30...61 | 204 |
| Ø 76 x 37 | 8000 TV | 24...47 | 205 |
| □ 92 x 25 | 3900 | 31...70 | 206 |
| □ 92 x 38 | 3000 | 49...89 | 207 |
| □ 119 x 25 | 9900 | 84...135 | 208 |
| □ 119 x 38 | 4000 N | 80...180 | 209 |
| □ 119 x 38 | 4000 Z | 100...180 | 210 |
| Ø 108 x 37 | 4600 TZ | 125...140 | 211 |
| □ 127 x 38 | 5900 | 150...206 | 212 |
| □ 135 x 38 | 5600 | 235...270 | 213 |
| 150 x 172 x 38 | 7000 | 320...380 | 214 |
| Ø 150 x 55 | 7800 | 325...380 | 215 |
| Ø 150 x 55 | 7400 | 380...425 | 216 |
| Ø 172 x 51 | 6000 | 375...500 | 217 |
| □ 225 x 80 | W2E 200 | 880...1030 | 218 |
| □ 280 x 80 | W2E 250 | 1865 | 219 |
| Ø 200 | K2E 200 | 765...840 | 220 |
| Ø 200 | K2E 200 | 765...850 | 222 |
| Ø 200 | K2D 200 | 780...880 | 224 |

Subject to alternations

## Overview of technically feasible designs

| Dimension | VDE, UL, CSA | Sinter-sleeve bearings/ ball bearings | Speed signal | Humidity protection | IP >= IP 54 | IP >= IP 68 | Salt fog protection | Page |
|---|---|---|---|---|---|---|---|---|
| **Axial fan** | | | | | | | | |
| **Series** | **mm** | | **OPTIONAL** | | | | | **p.** |
| 8000 N | 80 x 80 x 38 | ja | □/■ | – | • | • | • | • | 204 |
| 8000 TV | Ø 76 x 37 | ja | □/■ | – | • | • | • | • | 205 |
| 3900 | 92 x 92 x 25 | ja | □/■ | – | • | – | – | – | 206 |
| 3000 | 92 x 92 x 38 | ja | □/■ | – | • | • | • | • | 207 |
| 9900 | 119 x 119 x 25 | ja | □/■ | – | • | – | – | – | 208 |
| 4000 N | 119 x 119 x 38 | ja | □/■ | • | • | • | • | • | 209 |
| 4000 Z | 119 x 119 x 38 | ja | □/■ | • | • | • | • | • | 210 |
| 4600 TZ | Ø 108 x 37 | ja | □/■ | – | • | • | • | • | 211 |
| 5900 | 127 x 127 x 38 | ja | □/■ | – | • | – | – | – | 212 |
| 5600 | 135 x 135 x 38 | ja | ■ | – | • | • | – | • | 213 |
| 7000 | 150 x 172 x 38 | ja | ■ | – | – | – | – | – | 214 |
| 7800 | Ø 150 x 55 | ja | ■ | • | – | – | – | – | 215 |
| 7400 | Ø 150 x 55 | ja | ■ | – | – | – | – | – | 216 |
| 6000 | Ø 172 x 51 | ja | ■ | – | – | – | – | – | 217 |

Subject to alternations

• available – not yet available □ Sleeve bearings ■ Ball bearings

max. 61 m³/h

# AC axial fans

## Series 8000 N 80 x 80 x 38 mm

- **Material:** Housing: Die-cast aluminium
  Impeller: Painted sheet steel
- **Direction of air flow:** Exhaust over struts
- **Direction of rotation:** Clockwise, seen on rotor
- **Connection:** Via 2 single wires
  grounding lug for M4 x 8
- **Mass:** 490 g
- **Note:**
  Please note our new ACmaxx series. With identical mounting dimensions and voltages, this series achieves higher energy efficiency. See page 184

- **Possible special versions:**
  (See page 12)
  - Protection against moisture
  - Protection against salt fog
  - Type of protection: IP 54 / IP 68

| Nominal data | Air flow | Air flow | Nominal voltage | Frequency | Sound pressure level | Sound power level | Sintec sleeve bearings / Ball bearings | Input power | Nominal speed | Temperature range | Service life $L_{10}$ at 40 °C | at $T_{max}$ | Curve |
|---|---|---|---|---|---|---|---|---|---|---|---|---|---|
| **Type** | **m³/h** | **CFM** | **V** | **Hz** | **dB(A)** | **Bel(A)** | □/■ | **Watts** | **rpm** | **°C** | **Hours** | **Hours** | |
| 8880 N | 30 | 17,7 | **230** | **50** | 18 | 3,3 | □/ | 9,0 | 1 750 | -10...+80 | 60 000 / 25 000 | | ① |
| 8850 N | 37 | 21,8 | **230** | **50** | 24 | 3,9 | □/ | 12,5 | 2 150 | -10...+70 | 52 500 / 25 000 | | ② |
| 8550 N | 50 | 29,4 | **230** | **50** | 30 | 4,4 | □/ | 12,0 | 2 700 | -10...+70 | 52 500 / 25 000 | | ③ |
| 8556 N | 50 | 29,4 | **230** | **50** | 31 | 4,5 | /■ | 12,0 | 2 800 | -40...+90 | 52 500 / 15 000 | | ③ |
| 8830 N | 36 | 21,2 | **115** | **60** | 21 | 3,7 | □/ | 8,0 | 1 950 | -10...+80 | 62 500 / 25 000 | | ④ |
| 8800 N | 47 | 27,7 | **115** | **60** | 28 | 4,3 | □/ | 11,0 | 2 500 | -10...+70 | 55 000 / 27 500 | | ⑤ |
| 8500 N | 61 | 35,9 | **115** | **60** | 34 | 4,8 | □/ | 11,0 | 3 200 | -10...+75 | 55 000 / 25 000 | | ⑥ |
| 8506 N | 61 | 35,9 | **115** | **60** | 35 | 5,0 | /■ | 11,0 | 3 300 | -40...+95 | 55 000 / 15 000 | | ⑥ |

Subject to alternations

| Fan type | | | | | Lead wires | Length "L" |
|---|---|---|---|---|---|---|
| 8880 N | 8830 N | 8800 N | 8550 N | 8500 N | 310 mm long | AWG 18, TR 64 |
| 8556 N | 8506 N | | | | 310 mm long | AWG 22 |
| 8850 N | | | | | 440 mm long | AWG 18, TR 64 |

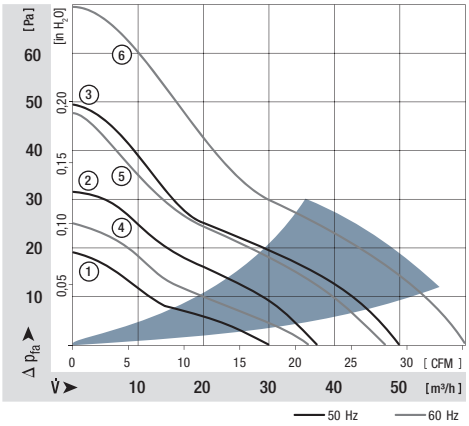


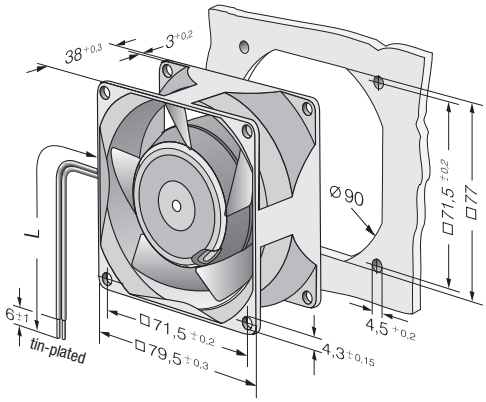




Guard grilles
from p. 238

ebmpapst

max. 47 m³/h

# AC axial fans

## Series 8000 TV Ø 76 x 37 mm

- **Material:** Impeller: Die-cast aluminium
  Mounting bracket: Metal
- **Direction of air flow:** Exhaust over mounting bracket
- **Direction of rotation:** Clockwise, seen on rotor
- **Connection:** Via 2 single wires
- **Mass:** 370 g

- **Possible special versions:**
  (See page 12)
  - Protection against moisture
  - Protection against salt fog
  - Type of protection: IP 54 / IP 68

| Nominal data | Air flow | Air flow | Nominal voltage | Frequency | Sound pressure level | Sintec sleeve bearings / Ball bearings | Input power | Nominal speed | Temperature range | Service life $L_{10}$ at 40 °C | at $T_{max}$ |
|---|---|---|---|---|---|---|---|---|---|---|---|
| **Type** | **m³/h** | **CFM** | **V** | **Hz** | **dB(A)** | □/■ | **Watts** | **rpm** | **°C** | **Hours** | **Hours** |
| 8880 TV | 24 | 14,1 | **230** | **50** | 15 | □/ | 9,0 | 1 650 | -10...+80 | 60 000 / 25 000 | |
| 8850 TV | 31 | 18,2 | **230** | **50** | 20 | □/ | 12,0 | 2 100 | -10...+70 | 52 500 / 25 000 | |
| 8550 TV | 40 | 23,5 | **230** | **50** | 27 | □/ | 12,0 | 2 650 | -10...+70 | 52 500 / 25 000 | |
| 8556 TV | 40 | 23,5 | **230** | **50** | 28 | /■ | 12,0 | 2 750 | -40...+90 | 52 500 / 15 000 | |
| 8830 TV | 27 | 15,9 | **115** | **60** | 18 | □/ | 8,0 | 1 850 | -10...+80 | 62 500 / 25 000 | |
| 8800 TV | 36 | 21,2 | **115** | **60** | 24 | □/ | 11,0 | 2 450 | -10...+70 | 55 000 / 27 500 | |
| 8500 TV | 47 | 27,7 | **115** | **60** | 32 | □/ | 11,0 | 3 150 | -10...+75 | 55 000 / 25 000 | |
| 8506 TV | 47 | 27,7 | **115** | **60** | 33 | /■ | 11,0 | 3 250 | -40...+95 | 55 000 / 15 000 | |

Subject to alternations

The air flow and noise level of fans without external housing depends on the installation conditions. The stated air flow and noise has been measured with an orifice 76.5 mm Ø at a distance of approx. 17 mm from the mounting bracket. Under exceptionally favourable mounting conditions, the air flow of fan series 8000 N is achievable. The noise in the optimal operating range can only be measured for these fans in a specific application.

| Fan type | | | | Lead wires | Length "L" |
|---|---|---|---|---|---|
| 8880 TV | 8850 TV | 8830 TV | 8800 TV | 325 mm long | AWG 18, TR 64 |
| 8550 TV | 8500 TV | | | 325 mm long | AWG 18, TR 64 |
| 8556 TV | 8506 TV | | | 325 mm long | AWG 18 |

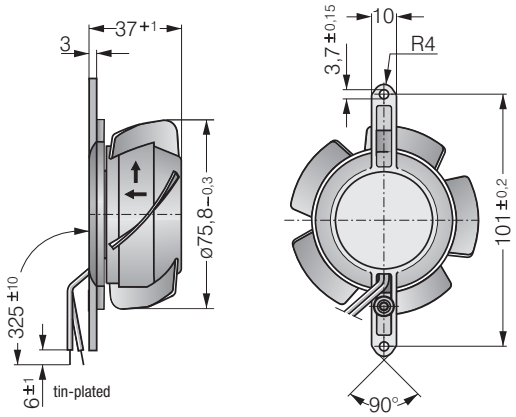

max. 70 m³/h

# AC axial fans

## Series 3900 92 x 92 x 25 mm

- **Material:** Housing: Die-cast aluminium
  Impeller: Mineral-reinforced plastic PA
- **Direction of air flow:** Exhaust over struts
- **Direction of rotation:** Counter-clockwise, seen on rotor
- **Connection:** Via 2 flat plug 2,8 x 0,5 mm
  grounding lug for M4
- **Mass:** 280 g
- **Note:**
  Please note our new ACmaxx series. With identical mounting dimensions and voltages, this series achieves higher energy efficiency. See page 185

- **Possible special versions:**
  (See page 12)
  - Protection against moisture

| Nominal data | Air flow | Air flow | Nominal voltage | Frequency | Sound pressure level | Sound power level | Sintec sleeve bearings / Ball bearings | Input power | Nominal speed | Temperature range | Service life $L_{10}$ at 40 °C | at $T_{max}$ | Curve |
|---|---|---|---|---|---|---|---|---|---|---|---|---|---|
| **Type** | **m³/h** | **CFM** | **V** | **Hz** | **dB(A)** | **Bel(A)** | □/■ | **Watts** | **rpm** | **°C** | **Hours** | **Hours** | |
| 3950 L | 31 | 18,2 | **230** | **50** | 24 | 3,8 | □/ | 6,0 | 1 550 | -10...+80 | 70 000 / 27 500 | | ① |
| 3956 L | 31 | 18,2 | **230** | **50** | 24 | 3,8 | /■ | 6,0 | 1 550 | -40...+80 | 70 000 / 27 500 | | ① |
| 3950 M | 45 | 26,5 | **230** | **50** | 29 | 4,2 | □/ | 6,0 | 2 150 | -10...+80 | 70 000 / 27 500 | | ② |
| 3956 M | 45 | 26,5 | **230** | **50** | 29 | 4,2 | /■ | 6,0 | 2 150 | -40...+80 | 70 000 / 27 500 | | ② |
| 3950 | 59 | 34,7 | **230** | **50** | 35 | 4,7 | □/ | 11,0 | 2 650 | -20...+80 | 55 000 / 20 000 | | ③ |
| 3956 | 59 | 34,7 | **230** | **50** | 35 | 4,7 | /■ | 11,0 | 2 650 | -40...+80 | 55 000 / 20 000 | | ③ |
| 3900 L | 39 | 23,0 | **115** | **60** | 27 | 4,0 | □/ | 5,0 | 1 850 | -10...+80 | 70 000 / 27 500 | | ④ |
| 3906 L | 39 | 23,0 | **115** | **60** | 27 | 4,0 | /■ | 5,0 | 1 850 | -40...+80 | 70 000 / 27 500 | | ④ |
| 3900 M | 53 | 31,2 | **115** | **60** | 34 | 4,6 | □/ | 5,0 | 2 600 | -10...+80 | 70 000 / 27 500 | | ⑤ |
| 3906 M | 53 | 31,2 | **115** | **60** | 34 | 4,6 | /■ | 5,0 | 2 600 | -40...+80 | 70 000 / 27 500 | | ⑤ |
| 3900 | 70 | 41,2 | **115** | **60** | 40 | 5,1 | □/ | 9,0 | 3 150 | -20...+80 | 60 000 / 22 500 | | ⑥ |
| 3906 | 70 | 41,2 | **115** | **60** | 40 | 5,1 | /■ | 9,0 | 3 150 | -40...+80 | 60 000 / 22 500 | | ⑥ |

Subject to alternations

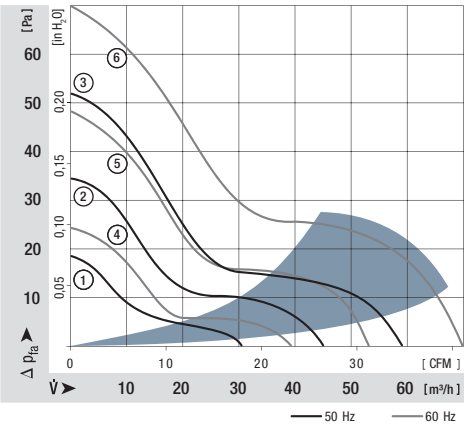


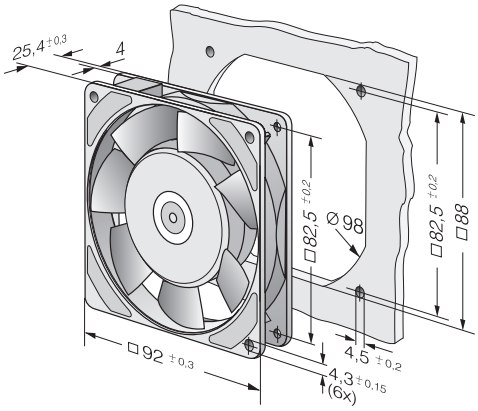




Guard grilles from p. 238

Connection cables p. 251

ebmpapst

max. 89 m³/h

# AC axial fans

## Series 3000 92 x 92 x 38 mm

- **Material:** Housing: Die-cast aluminium
  Impeller: Painted sheet steel
- **Direction of air flow:** Exhaust over struts
- **Direction of rotation:** Clockwise, seen on rotor
- **Connection:** Via 2 single wires
  grounding lug for M4 x 8
- **Mass:** 420 g
- **Note:**
  Please note our new ACmaxx series. With identical mounting dimensions and voltages, this series achieves higher energy efficiency. See page 185

- **Possible special versions:**
  (See page 12)
  - Protection against moisture
  - Protection against salt fog
  - Type of protection: IP 54 / IP 68

| Nominal data | Air flow | Air flow | Nominal voltage | Frequency | Sound pressure level | Sound power level | Sintec sleeve bearings / Ball bearings | Input power | Nominal speed | Temperature range | Service life $L_{10}$ at 40 °C | at $T_{max}$ | Curve |
|---|---|---|---|---|---|---|---|---|---|---|---|---|---|
| **Type** | **m³/h** | **CFM** | **V** | **Hz** | **dB(A)** | **Bel(A)** | □/■ | **Watts** | **rpm** | **°C** | **Hours** | **Hours** | |
| 3850 | 49 | 28,8 | **230** | **50** | 24 | 3,7 | □/ | 9,0 | 1 750 | -10...+75 | 60 000 / 27 500 | | ① |
| 3856 | 54 | 31,8 | **230** | **50** | 26 | 3,9 | /■ | 9,0 | 1 950 | -40...+90 | 60 000 / 20 000 | | ② |
| 3550 | 67 | 39,4 | **230** | **50** | 32 | 4,4 | □/ | 8,5 | 2 300 | -10...+80 | 60 000 / 25 000 | | ③ |
| 3556 | 67 | 39,4 | **230** | **50** | 33 | 4,5 | /■ | 8,5 | 2 400 | -40...+90 | 60 000 / 20 000 | | ③ |
| 3650 | 75 | 44,1 | **230** | **50** | 36 | 4,8 | □/ | 12,0 | 2 650 | -10...+55 | 52 500 / 37 500 | | ④ |
| 3656 | 75 | 44,1 | **230** | **50** | 37 | 4,9 | /■ | 12,0 | 2 700 | -40...+75 | 52 500 / 22 500 | | ④ |
| 3800 | 54 | 31,8 | **115** | **60** | 26 | 3,9 | □/ | 8,0 | 1 900 | -10...+80 | 62 500 / 25 000 | | ⑤ |
| 3806 | 60 | 35,3 | **115** | **60** | 29 | 4,2 | /■ | 8,0 | 2 150 | -40...+95 | 62 500 / 17 500 | | ⑥ |
| 3500 | 73 | 43,0 | **115** | **60** | 35 | 4,6 | □/ | 8,0 | 2 500 | -10...+80 | 62 500 / 25 000 | | ⑦ |
| 3506 | 73 | 43,0 | **115** | **60** | 36 | 4,7 | /■ | 8,0 | 2 600 | -40...+95 | 62 500 / 17 500 | | ⑦ |
| 3600 | 89 | 52,4 | **115** | **60** | 41 | 5,1 | □/ | 11,0 | 3 100 | -10...+65 | 55 000 / 30 000 | | ⑧ |
| 3606 | 89 | 52,4 | **115** | **60** | 42 | 5,2 | /■ | 11,0 | 3 200 | -40...+75 | 55 000 / 25 000 | | ⑧ |

Subject to alternations

| Fan type | Lead wires | Length "L" |
|---|---|---|
| With sleeve bearings | 310 mm long | AWG 18, TR 64 |
| With ball bearings | 310 mm long | AWG 18 |

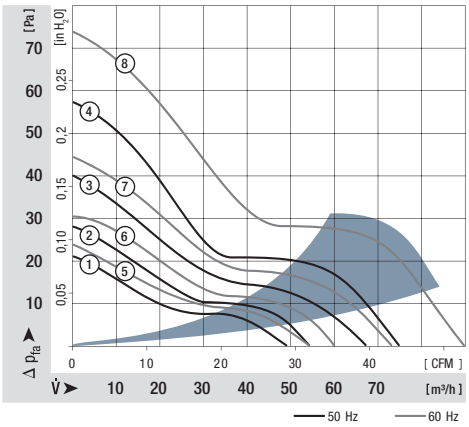


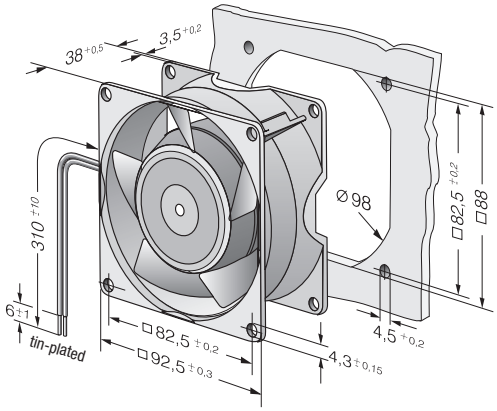

max. 135 m³/h

# AC axial fans

## Series 9900 119 x 119 x 25 mm

- **Material:** Housing: Die-cast aluminium
  Impeller: Mineral-reinforced plastic PA
- **Direction of air flow:** Exhaust over struts
- **Direction of rotation:** Counter-clockwise, seen on rotor
- **Connection:** Via 2 flat plug 2,8 x 0,5 mm grounding lug for M4
- **Mass:** 320 g
- **Note:**
  Please note our new ACmaxx series. With identical mounting dimensions and voltages, this series achieves higher energy efficiency. See page 188

- **Possible special versions:**
  (See page 12)
  - Protection against moisture

| Nominal data | Air flow | Air flow | Nominal voltage | Frequency | Sound pressure level | Sound power level | Sintec sleeve bearings / Ball bearings | Input power | Nominal speed | Temperature range | Service life $L_{10}$ at 40 °C | at $T_{max}$ | Curve |
|---|---|---|---|---|---|---|---|---|---|---|---|---|---|
| **Type** | **m³/h** | **CFM** | **V** | **Hz** | **dB(A)** | **Bel(A)** | □/■ | **Watts** | **rpm** | **°C** | **Hours** | **Hours** | |
| 9956 L | 84 | 49,4 | **230** | **50** | 29 | 4,4 | /■ | 9,5 | 1850 | -40...+80 | 57 500 / 22 500 | | ① |
| 9956 M | 104 | 61,2 | **230** | **50** | 35 | 4,7 | /■ | 10,0 | 2250 | -40...+80 | 57 500 / 22 500 | | ② |
| 9950 | 117 | 68,9 | **230** | **50** | 37 | 5,0 | □/ | 14,0 | 2450 | -20...+70 | 47 500 / 22 500 | | ③ |
| 9956 | 117 | 68,9 | **230** | **50** | 37 | 5,0 | /■ | 14,0 | 2450 | -40...+70 | 47 500 / 22 500 | | ③ |
| 9906 L | 100 | 58,9 | **115** | **60** | 34 | 4,6 | /■ | 8,0 | 2100 | -40...+80 | 62 500 / 25 000 | | ④ |
| 9906 M | 111 | 65,3 | **115** | **60** | 37 | 5,0 | /■ | 8,0 | 2450 | -40...+80 | 62 500 / 25 000 | | ⑤ |
| 9900 | 135 | 79,5 | **115** | **60** | 42 | 5,4 | □/ | 12,0 | 2850 | -20...+70 | 52 500 / 25 000 | | ⑥ |
| 9906 | 135 | 79,5 | **115** | **60** | 42 | 5,4 | /■ | 12,0 | 2850 | -40...+70 | 52 500 / 25 000 | | ⑥ |

Subject to alternations

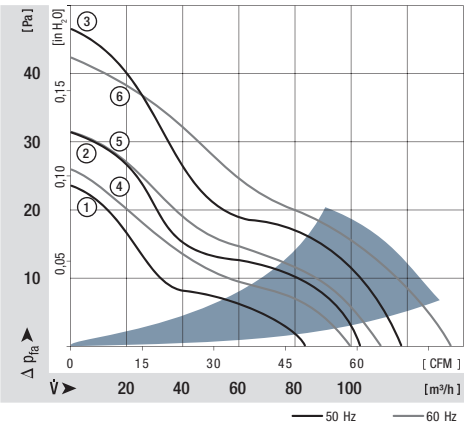


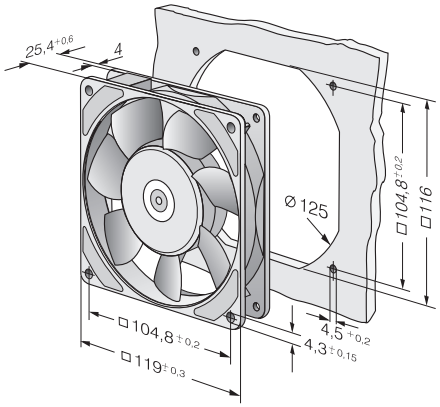




Guard grilles from p. 238

Connection cables p. 251

ebmpapst

max. 180 m³/h

# AC axial fans

## Series 4000 N 119 x 119 x 38 mm

- **Material:** Housing: Die-cast aluminium
  Impeller: Painted sheet steel
- **Direction of air flow:** Intake over struts
  Types 4890 N and 4840 N exhaust over struts
- **Direction of rotation:** Clockwise, seen on rotor
- **Connection:** Via 2 single wires
  grounding lug for M4 and UNC
- **Mass:** 550 g
- **Note:**
  Please note our new ACmaxx series. With identical mounting dimensions and voltages, this series achieves higher energy efficiency. See page 188

- **Optionally available:**
  Variants with strengthened mounting flanges and customizable single strands
- **Possible special versions:**
  (See page 12)
  - Speed signal
  - Protection against moisture
  - Protection against salt fog
  - Type of protection: IP 54 / IP 68

| Nominal data | Air flow | Air flow | Nominal voltage | Frequency | Sound pressure level | Sound power level | Sintec sleeve bearings / Ball bearings | Input power | Nominal speed | Temperature range | Service life $L_{10}$ at 40 °C | at $T_{max}$ | Curve |
|---|---|---|---|---|---|---|---|---|---|---|---|---|---|
| **Type** | **m³/h** | **CFM** | **V** | **Hz** | **dB(A)** | **Bel(A)** | □/■ | **Watts** | **rpm** | **°C** | **Hours** | **Hours** | |
| 4890 N | 80 | 47 | **230** | **50** | 25 | 4,0 | □/ | 11,0 | 1 550 | -10...+70 | 55 000 / 27 500 | | ① |
| 4850 N* | 100 | 59 | **230** | **50** | 32 | 4,4 | □/ | 10,0 | 1 800 | -10...+70 | 57 500 / 27 500 | | ② |
| 4580 N* | 123 | 72 | **230** | **50** | 41 | 5,2 | □/ | 18,0 | 2 350 | -10...+55 | 40 000 / 27 500 | | ③ |
| 4550 N* | 145 | 85 | **230** | **50** | 44 | 5,4 | □/ | 16,5 | 2 550 | -10...+55 | 42 500 / 30 000 | | ④ |
| 4650 N | 160 | 94 | **230** | **50** | 46 | 5,4 | □/ | 19,0 | 2 650 | -10...+55 | 37 500 / 27 500 | | ⑤ |
| 4656 N | 160 | 94 | **230** | **50** | 47 | 5,5 | /■ | 19,0 | 2 650 | -40...+85 | 37 500 / 15 000 | | ⑤ |
| 4840 N | 85 | 50 | **115** | **60** | 26 | 4,1 | □/ | 10,0 | 1 650 | -10...+75 | 57 500 / 25 000 | | ⑥ |
| 4800 N* | 97 | 57 | **115** | **60** | 32 | 4,3 | □/ | 9,0 | 1 750 | -10...+75 | 60 000 / 27 500 | | ⑦ |
| 4530 N* | 151 | 89 | **115** | **60** | 45 | 5,4 | □/ | 16,0 | 2 700 | -10...+65 | 42 500 / 25 000 | | ⑧ |
| 4500 N* | 169 | 100 | **115** | **60** | 48 | 5,7 | □/ | 15,0 | 3 000 | -10...+65 | 47 500 / 25 000 | | ⑨ |
| 4600 N | 180 | 106 | **115** | **60** | 50 | 5,7 | □/ | 18,0 | 3 100 | -10...+60 | 40 000 / 25 000 | | ⑩ |
| 4606 N | 180 | 106 | **115** | **60** | 51 | 5,8 | /■ | 18,0 | 3 100 | -40...+90 | 40 000 / 15 000 | | ⑩ |

Subject to alternations

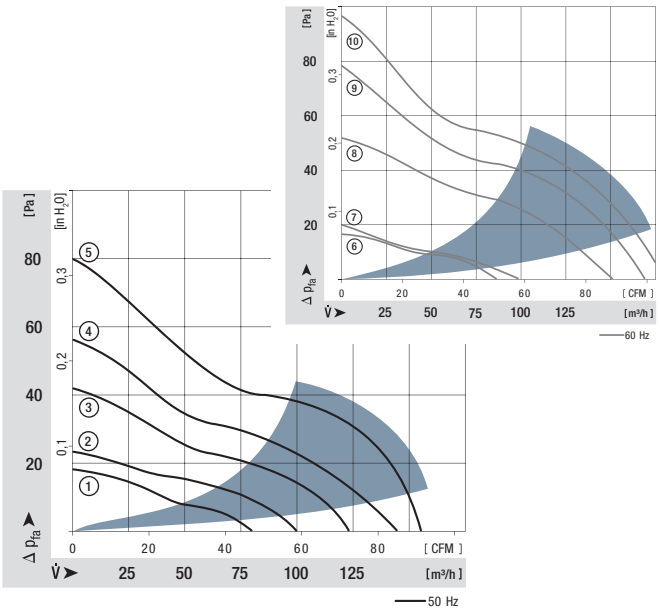


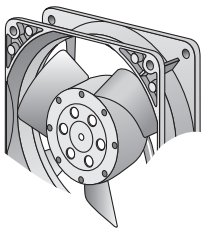

* Fan with 3 blades.

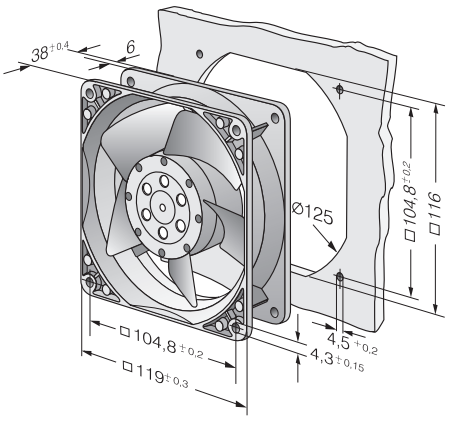

max. 180 m³/h

# AC axial fans

## Series 4000 Z 119 x 119 x 38 mm

- **Material:** Housing: Die-cast aluminium
  Impeller: Painted sheet steel
- **Direction of air flow:** Exhaust over struts
- **Direction of rotation:** Clockwise, seen on rotor
- **Connection:** Via 2 flat plug 2,8 x 0,5 mm
  grounding lug for M4 x 8
- **Mass:** 540 g
- **Note:**
  Please note our new ACmaxx series. With identical mounting dimensions and voltages, this series achieves higher energy efficiency. See page 188

- **Possible special versions:**
  (See page 12)
  - Speed signal
  - Protection against moisture
  - Protection against salt fog
  - Type of protection: IP 54 / IP 68

| Nominal data | Air flow | Air flow | Nominal voltage | Frequency | Sound pressure level | Sound power level | Sintec sleeve bearings / Ball bearings | Input power | Nominal speed | Temperature range | Service life $L_{10}$ at 40 °C | at $T_{max}$ | Curve |
|---|---|---|---|---|---|---|---|---|---|---|---|---|---|
| **Type** | **m³/h** | **CFM** | **V** | **Hz** | **dB(A)** | **Bel(A)** | □/■ | **Watts** | **rpm** | **°C** | **Hours** | **Hours** | |
| 4850 Z | 100 | 59 | **230** | **50** | 26 | 4,0 | □/ | 13,0 | 1 700 | -10...+65 | 50 000 / 27 500 | | ① |
| 4856 Z | 100 | 59 | **230** | **50** | 26 | 4,0 | /■ | 13,0 | 1 700 | -40...+75 | 50 000 / 20 000 | | ① |
| 4580 Z | 115 | 68 | **230** | **50** | 30 | 4,3 | □/ | 13,0 | 1 900 | -10...+65 | 50 000 / 27 500 | | ② |
| 4586 Z | 115 | 68 | **230** | **50** | 30 | 4,3 | /■ | 13,0 | 1 900 | -40...+75 | 50 000 / 20 000 | | ② |
| 4650 Z | 160 | 94 | **230** | **50** | 40 | 5,3 | □/ | 19,0 | 2 650 | -10...+50 | 37 500 / 30 000 | | ③ |
| 4656 Z | 160 | 94 | **230** | **50** | 40 | 5,3 | /■ | 19,0 | 2 650 | -40...+75 | 37 500 / 17 500 | | ③ |
| 4800 Z | 105 | 62 | **115** | **60** | 28 | 4,1 | □/ | 12,0 | 1 800 | -10...+70 | 52 500 / 25 000 | | ④ |
| 4806 Z | 105 | 62 | **115** | **60** | 28 | 4,1 | /■ | 12,0 | 1 800 | -40...+75 | 52 500 / 17 500 | | ④ |
| 4530 Z | 120 | 71 | **115** | **60** | 32 | 4,4 | □/ | 12,0 | 2 000 | -10...+70 | 52 500 / 25 000 | | ⑤ |
| 4536 Z | 120 | 71 | **115** | **60** | 32 | 4,4 | /■ | 12,0 | 2 000 | -40...+75 | 52 500 / 17 500 | | ⑤ |
| 4600 Z | 180 | 106 | **115** | **60** | 45 | 5,6 | □/ | 18,0 | 3 100 | -10...+60 | 40 000 / 25 000 | | ⑥ |
| 4606 Z | 180 | 106 | **115** | **60** | 45 | 5,6 | /■ | 18,0 | 3 100 | -40...+85 | 40 000 / 15 000 | | ⑥ |

Subject to alternations

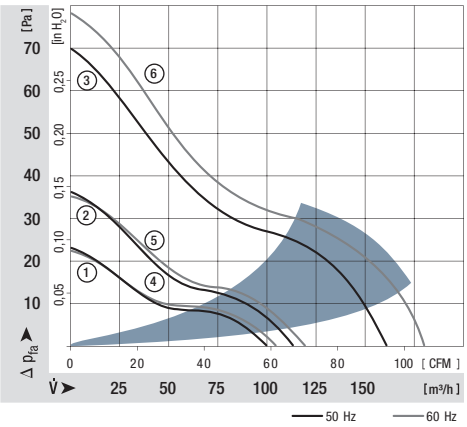


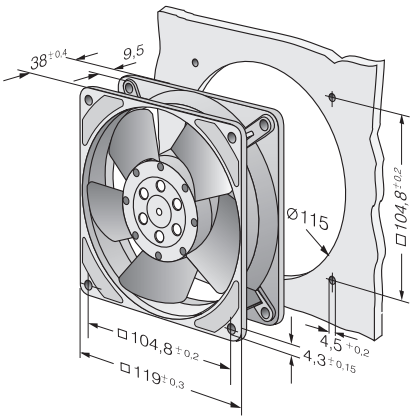




Guard grilles from p. 238

Connection cables p. 251

ebmpapst

max. 140 m³/h

# AC axial fans

## Series 4600 TZ Ø 108 x 37 mm

- **Material:** Impeller: Die-cast aluminium
  Mounting bracket: Metal
- **Direction of air flow:** Exhaust over mounting bracket
- **Direction of rotation:** Clockwise, seen on rotor
- **Connection:** Via 2 single wires
- **Mass:** 430 g

- **Possible special versions:**
  (See page 12)
  - Protection against moisture
  - Protection against salt fog
  - Type of protection: IP 54 / IP 68

| Nominal data | Air flow | Air flow | Nominal voltage | Frequency | Sound pressure level | Sintec sleeve bearings / Ball bearings | Input power | Nominal speed | Temperature range | Service life $L_{10}$ at 40 °C | at $T_{max}$ |
|---|---|---|---|---|---|---|---|---|---|---|---|
| **Type** | **m³/h** | **CFM** | **V** | **Hz** | **dB(A)** | □/■ | **Watts** | **rpm** | **°C** | **Hours** | **Hours** |
| 4650 TZ | 125 | 73,6 | **230** | **50** | 42 | □/ | 19,0 | 2 600 | -10...+50 | 37 500 | 30 000 |
| 4656 TZ | 125 | 73,6 | **230** | **50** | 42 | /■ | 19,0 | 2 600 | -40...+65 | 37 500 | 20 000 |
| 4600 TZ | 140 | 82,4 | **115** | **60** | 45 | □/ | 18,0 | 2 950 | -10...+50 | 40 000 | 32 500 |
| 4606 TZ | 140 | 82,4 | **115** | **60** | 45 | /■ | 18,0 | 2 950 | -40...+75 | 40 000 | 17 500 |

Subject to alternations

The air flow and noise level of fans without external housing depends on the installation conditions. The stated air flow and noise has been measured with an orifice 109 mm Ø at a distance of approx. 17 mm from the mounting bracket. Under exceptionally favourable mounting conditions, the air flow of fan series 4000 Z is achievable. The noise in the optimal operating range can only be measured for these fans in a specific application.

| Fan type | | Lead wires |
|---|---|---|
| 4650 TZ | 4600 TZ | AWG 22, TR 32 |
| 4656 TZ | 4606 TZ | AWG 18 |

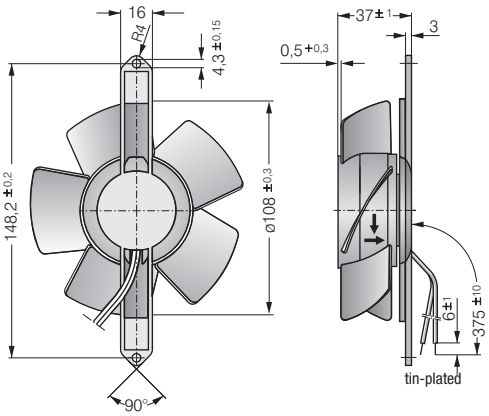

max. 206 m³/h

# AC axial fans

## Series 5900 127 x 127 x 38 mm

- **Material:** Housing: Die-cast aluminium
  Impeller: GRP[1)] (PA)
- **Direction of air flow:** Exhaust over struts
- **Direction of rotation:** Counter-clockwise, seen on rotor
- **Connection:** Via 2 flat plug 2,8 x 0,5 mm grounding lug for M4 x 6
- **Mass:** 570 g
- **Possible special versions:** (See page 12)
  - Protection against moisture

1) Fibreglass-reinforced plastic

| Nominal data | Air flow | Air flow | Nominal voltage | Frequency | Sound pressure level | Sound power level | Sintec sleeve bearings / Ball bearings | Input power | Nominal speed | Temperature range | Service life $L_{10}$ at 40 °C | at $T_{max}$ | Curve |
|---|---|---|---|---|---|---|---|---|---|---|---|---|---|
| **Type** | **m³/h** | **CFM** | **V** | **Hz** | **dB(A)** | **Bel(A)** | □/■ | **Watts** | **rpm** | **°C** | **Hours** | **Hours** | |
| 5988 | 150 | 88 | **230** | **50** | 37 | 4,9 | /■ | 13,0 | 2 250 | -30...+55 | 35 000 | / 20 000 | ① |
| 5950 | 180 | 106 | **230** | **50** | 43 | 5,4 | □/ | 18,0 | 2 700 | -20...+50 | 40 000 | / 32 500 | ③ |
| 5958 | 180 | 106 | **230** | **50** | 44 | 5,5 | /■ | 18,0 | 2 750 | -30...+60 | 40 000 | / 25 000 | ③ |
| 5938 | 162 | 95 | **115** | **60** | 40 | 4,9 | /■ | 12,0 | 2 500 | -30...+55 | 35 000 | / 20 000 | ② |
| 5900 | 206 | 121 | **115** | **60** | 46 | 5,7 | □/ | 17,0 | 3 050 | -20...+55 | 42 500 | / 30 000 | ④ |
| 5908 | 206 | 121 | **115** | **60** | 47 | 5,8 | /■ | 17,0 | 3 100 | -30...+75 | 42 500 | / 20 000 | ④ |

Subject to alternations

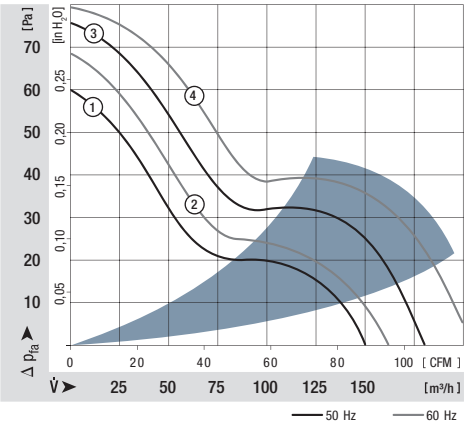


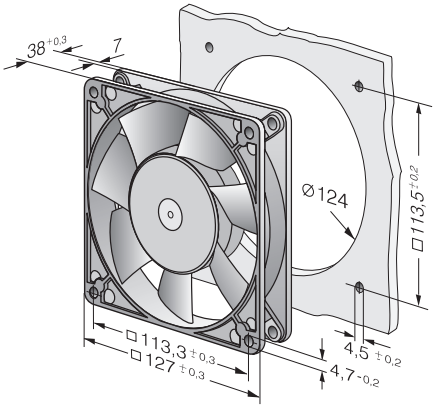




Guard grilles from p. 238

Connection cables p. 251

ebmpapst

max. 270 m³/h

# AC axial fans

## Series 5600 135 x 135 x 38 mm

- **Material:** Housing: Die-cast aluminium
  Impeller: Painted sheet steel
- **Direction of air flow:** Exhaust over struts
- **Direction of rotation:** Counter-clockwise, seen on rotor
- **Connection:** Via 2 flat plug 2,8 x 0,5 mm
  grounding lug for M4 x 8
- **Mass:** 800 g

- **Possible special versions:**
  (See page 12)
  - Protection against moisture
  - Protection against salt fog
  - Type of protection: IP 54

| Nominal data | Air flow | Air flow | Nominal voltage | Frequency | Sound pressure level | Sound power level | Sintec sleeve bearings / Ball bearings | Input power | Nominal speed | Temperature range | Service life $L_{10}$ at 40 °C | at $T_{max}$ | Curve |
|---|---|---|---|---|---|---|---|---|---|---|---|---|---|
| **Type** | **m³/h** | **CFM** | **V** | **Hz** | **dB(A)** | **Bel(A)** | **□/■** | **Watts** | **rpm** | **°C** | **Hours** | **Hours** | |
| 5656 S | 235 | 138 | **230** | **50** | 46 | 5,9 | /■ | 30,0 | 2 700 | -35...+70 | 45 000 / 20 000 | | ① |
| 5606 S | 270 | 159 | **115** | **60** | 50 | 6,2 | /■ | 26,0 | 3 100 | -35...+80 | 47 500 / 20 000 | | ② |

Subject to alternations

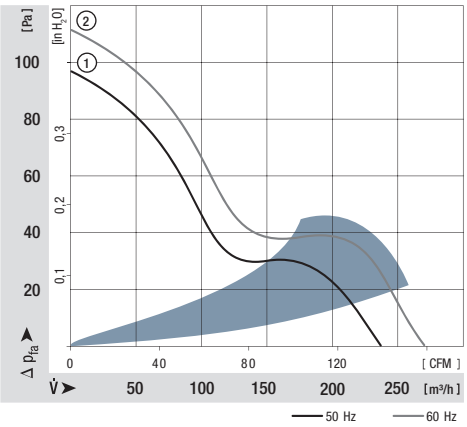


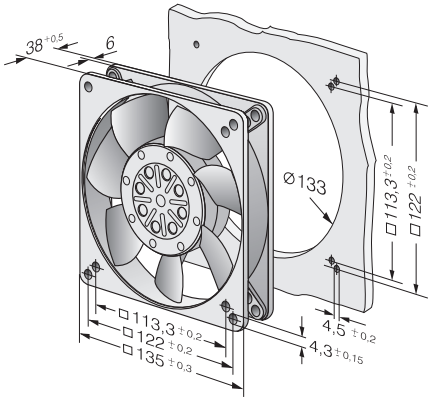

max. 380 m³/h

# AC axial fans

## Series 7000 150 x 172 x 38 mm

- **Material:** Housing: Die-cast aluminium
  Impeller: Painted sheet steel
- **Direction of air flow:** Exhaust over struts
- **Direction of rotation:** Counter-clockwise, seen on rotor
- **Connection:** Via 2 flat plug 2,8 x 0,5 mm
  grounding lug for M4 x 8
- **Mass:** 900 g
- **Note:**
  Please note our new ACmaxx series. With identical mounting dimensions and voltages, this series achieves higher energy efficiency.
  See page 190, 192, 193

| Nominal data | Air flow | Air flow | Nominal voltage | Frequency | Sound pressure level | Sound power level | Sintec sleeve bearings / Ball bearings | Input power | Nominal speed | Temperature range | Service life $L_{10}$ at 40 °C | at $T_{max}$ | Curve |
|---|---|---|---|---|---|---|---|---|---|---|---|---|---|
| **Type** | **m³/h** | **CFM** | **V** | **Hz** | **dB(A)** | **Bel(A)** | **□/■** | **Watts** | **rpm** | **°C** | **Hours** | **Hours** | |
| 7056 ES | 320 | 188 | **230** | **50** | 51 | 6,4 | /■ | 27,0 | 2 800 | -25...+55 | 60 000 / 32 000 | | ① |
| 7006 ES | 380 | 224 | **115** | **60** | 56 | 6,8 | /■ | 28,0 | 3 350 | -25...+65 | 55 000 / 18 000 | | ② |

Subject to alternations

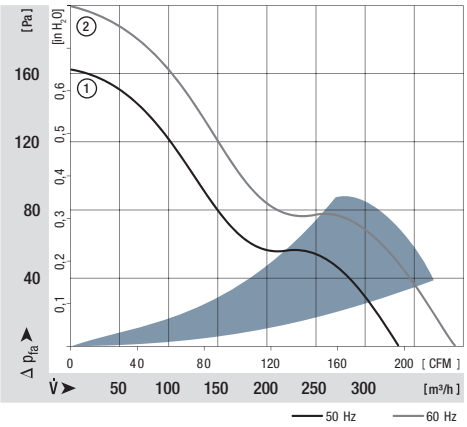


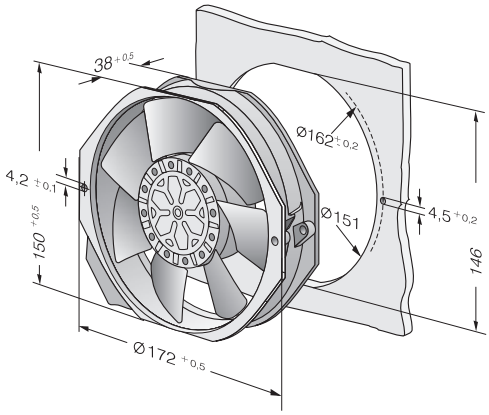




Guard grilles from p. 238

Connection cables p. 251

ebmpapst

max. 380 m³/h

# AC axial fans

## Series 7800 Ø 150 x 55 mm

- **Material:** Housing: Die-cast aluminium
  Impeller: Painted sheet steel
- **Direction of air flow:** Exhaust over struts
- **Direction of rotation:** Counter-clockwise, seen on rotor
- **Connection:** Via 2 single wires, wire ends with brass lead tips grounding lug for M4 x 8
- **Mass:** 1,1 kg
- **Note:**
  Please note our new ACmaxx series. With identical mounting dimensions and voltages, this series achieves higher energy efficiency. See page 190

| Nominal data | Air flow | Air flow | Nominal voltage | Frequency | Sound pressure level | Sound power level | Sintec sleeve bearings / Ball bearings | Input power | Nominal speed | Temperature range | Service life $L_{10}$ at 40 °C | at $T_{max}$ | Curve |
|---|---|---|---|---|---|---|---|---|---|---|---|---|---|
| **Type** | **m³/h** | **CFM** | **V** | **Hz** | **dB(A)** | **Bel(A)** | □/■ | **Watts** | **rpm** | **°C** | **Hours** | **Hours** | |
| 7855 ES | 325 | 191 | **230** | **50** | 49 | 6,0 | /■ | 45,0 | 2 800 | -25...+50 | 60 000 / 47 500 | | ① |
| 7856 ES | 325 | 191 | **230** | **50** | 49 | 6,0 | /■ | 45,0 | 2 800 | -25...+70 | 60 000 / 30 000 | | ① |
| 7805 ES | 380 | 224 | **115** | **60** | 53 | 6,4 | /■ | 38,0 | 3 250 | -25...+70 | 60 000 / 47 500 | | ② |
| 7806 ES | 380 | 224 | **115** | **60** | 53 | 6,4 | /■ | 38,0 | 3 250 | -25...+90 | 60 000 / 15 000 | | ② |

Subject to alternations

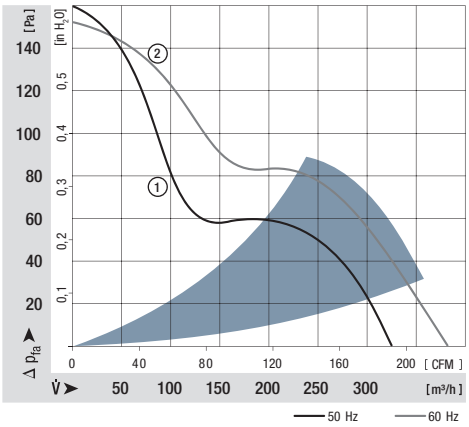


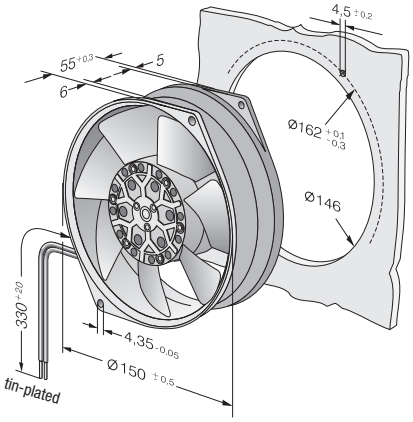

max. 425 m³/h

# AC axial fans

## Series 7400 Ø 150 x 55 mm

- **Material:** Housing: Die-cast aluminium
  Impeller: Painted sheet steel
- **Direction of air flow:** Exhaust over struts
- **Direction of rotation:** Counter-clockwise, seen on rotor
- **Connection:** Via 2 single wires, wire ends with brass lead tips grounding lug for M4 x 8
- **Mass:** 1,1 kg
- **Note:**
  Please note our new ACmaxx series. With identical mounting dimensions and voltages, this series achieves higher energy efficiency. See page 190

| Nominal data | Air flow | Air flow | Nominal voltage | Frequency | Sound pressure level | Sound power level | Sintec sleeve bearings / Ball bearings | Input power | Nominal speed | Temperature range | Service life $L_{10}$ at 40 °C / at $T_{max}$ | Curve |
|---|---|---|---|---|---|---|---|---|---|---|---|---|
| **Type** | **m³/h** | **CFM** | **V** | **Hz** | **dB(A)** | **Bel(A)** | **□/■** | **Watts** | **rpm** | **°C** | **Hours / Hours** | |
| 7450 ES | 380 | 224 | **230** | **50** | 60 | 6,8 | /■ | 47,0 | 2 700 | -25...+50 | 63 000 / 50 000 | ① |
| 7400 ES | 425 | 250 | **115** | **60** | 62 | 6,9 | /■ | 46,0 | 3 050 | -25...+70 | 50 000 / 24 000 | ② |

Subject to alternations

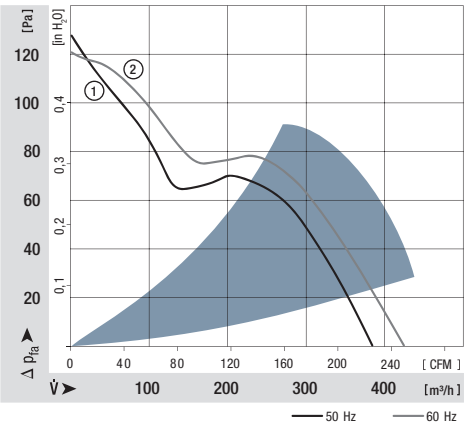


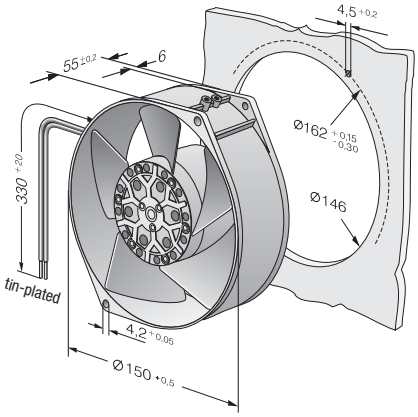




Guard grilles
from p. 238

ebmpapst

max. 500 m³/h

# AC axial fans

## Series 6000 Ø 172 x 51 mm

- **Material:** Housing: Die-cast aluminium
  Impeller: Painted sheet steel
- **Direction of air flow:** Exhaust over struts
- **Direction of rotation:** Counter-clockwise, seen on rotor
- **Connection:** Via 2 flat plug 2,8 x 0,5 mm
  grounding lug for M4 x 6
- **Mass:** 1,0 kg
- **Note:**
  Please note our new ACmaxx series. With identical mounting dimensions and voltages, this series achieves higher energy efficiency. See page 192,193

| Nominal data | Air flow | Air flow | Nominal voltage | Frequency | Sound pressure level | Sound power level | Sintec sleeve bearings / Ball bearings | Input power | Nominal speed | Temperature range | Service life $L_{10}$ at 40 °C | at $T_{max}$ | Curve |
|---|---|---|---|---|---|---|---|---|---|---|---|---|---|
| **Type** | **m³/h** | **CFM** | **V** | **Hz** | **dB(A)** | **Bel(A)** | □/■ | **Watts** | **rpm** | **°C** | **Hours** | **Hours** | |
| 6058 ES | 375 | 221 | **230** | **50** | 55 | 5,9 | /■ | 24,0 | 2 800 | -25...+70 | 62 000 / 31 000 | | ① |
| 6078 ES | 420 | 247 | **230** | **50** | 54 | 6,3 | /■ | 26,0 | 2 800 | -25...+60 | 62 000 / 39 000 | | ② |
| 6008 ES | 440 | 259 | **115** | **60** | 60 | 6,4 | /■ | 26,0 | 3 300 | -25...+70 | 57 000 / 28 000 | | ③ |
| 6028 ES | 500 | 284 | **115** | **60** | 58 | 6,7 | /■ | 29,0 | 3 300 | -25...+75 | 57 000 / 22 000 | | ④ |

Subject to alternations

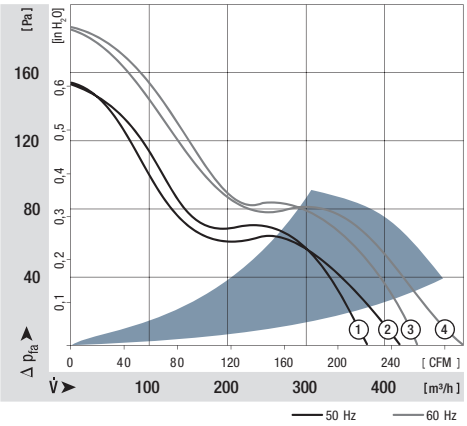


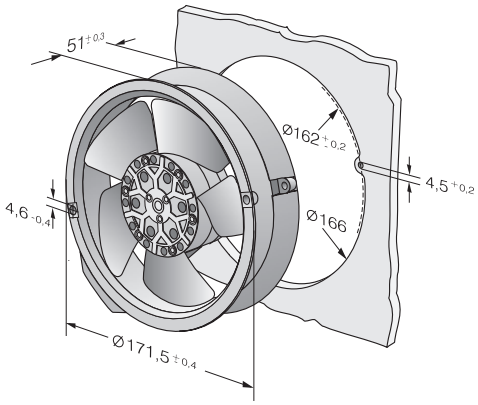

max. 1030 m³/h

# AC axial fans

## 225 x 225 x 80 mm

- **Material:** Housing: Die-cast aluminium
  Impeller: Sheet steel
- **Number of blades:** 7
- **Direction of air flow:** Exhaust over struts
- **Direction of rotation:** Counter-clockwise, seen on rotor
- **Type of protection:** IP44, depending on installation and position
- **Insulation class:** "B"
- **Mounting position:** Any
- **Connection:** Terminal strips (operating capacitor connected)
- **Mass:** 2,0 kg
- **Operation mode:** Continuous operation (S1)
- **Bearings:** Maintenance-free ball bearings

| Nominal data | Air flow | Air flow | Nominal voltage | Frequency | Sound pressure level | Sound power level | Sintec sleeve bearings / Ball bearings | Input power | Speed / rpm | Perm. amb. temp. | Service life $L_{10}$ at 40 °C | at $T_{max}$ | Curve |
|---|---|---|---|---|---|---|---|---|---|---|---|---|---|
| **Type** | **m³/h** | **CFM** | **V** | **Hz** | **dB(A)** | **Bel(A)** | **□/■** | **Watts** | **rpm** | **°C** | **Hours** | **Hours** | |
| W2E 200-HK86-01 | 1030 | 606 | **115** | **60** | 61 | 6,7 | /■ | 80,0 | 2800 | -25...+65 | 60 000 / 58 000 | | ① |
| W2E 200-HK38-01 | 880 | 518 | **230** | **50** | 58 | 6,6 | /■ | 64,0 | 2550 | -25...+60 | 63 000 / 60 000 | | ① |

Subject to alternations

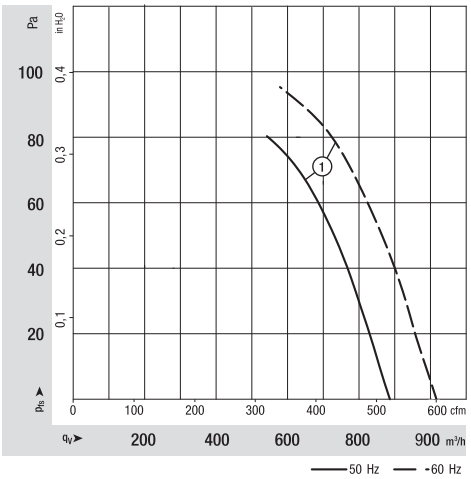


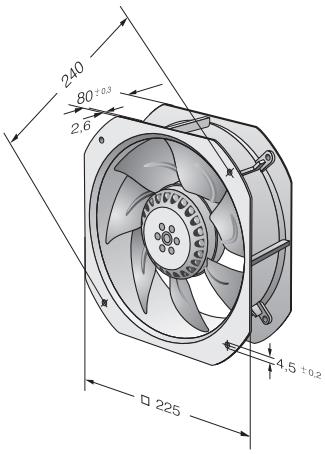

max. 1865 m³/h

# AC axial fans

## 280 x 280 x 80 mm

- **Material:** Housing: Die-cast aluminium
  Impeller: Sheet steel
- **Number of blades:** 7
- **Direction of air flow:** Exhaust over struts
- **Direction of rotation:** Counter-clockwise, seen on rotor
- **Type of protection:** IP44, depending on installation and position
- **Insulation class:** "F"
- **Mounting position:** Any
- **Connection:** Terminal strips (operating capacitor connected)
- **Mass:** 2,0 kg
- **Operation mode:** Continuous operation (S1)
- **Bearings:** Maintenance-free ball bearings

| Nominal data | Air flow | Air flow | Nominal voltage | Frequency | Sound pressure level | Sound power level | Sintec sleeve bearings / Ball bearings | Input power | Speed / rpm | Perm. amb. temp. | Service life $L_{10}$ at 40 °C | at $T_{max}$ | Curve |
|---|---|---|---|---|---|---|---|---|---|---|---|---|---|
| **Type** | **m³/h** | **CFM** | **V** | **Hz** | **dB(A)** | **Bel(A)** | □/■ | **Watts** | **rpm** | **°C** | **Hours** | **Hours** | |
| W2E 250-HL06-01 | 1865 | 1077 | **230** | **50** | 66 | 7,2 | /■ | 127,0 | 2 550 | -25...+60 | 63 000 / 70 000 | | ① |

Subject to alternations

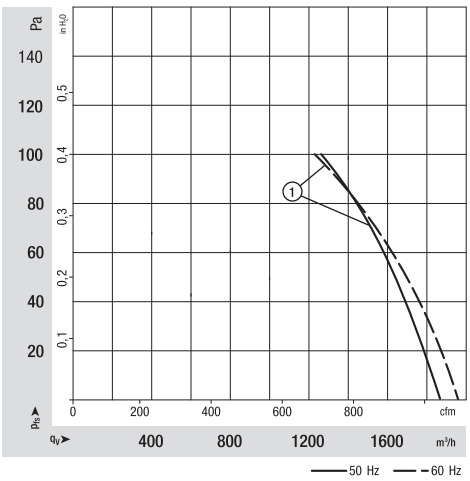


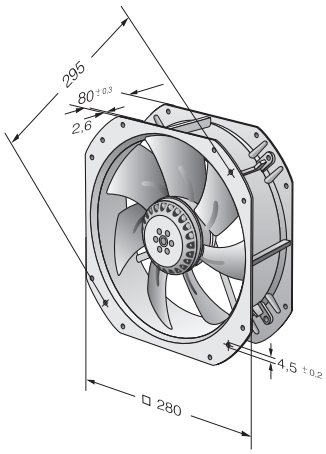

max. 850 m³/h

# AC diagonal module

## Ø 200 mm

- **Material:** Housing: Plastic PA
  Support bracket: Plastic PA
  Impeller: Plastic PA
  Rotor: Coated in black
- **Number of blades:** 7
- **Direction of air flow:** "V"
- **Direction of rotation:** Clockwise, seen on rotor
- **Type of protection:** IP 44, depending on installation and position
- **Insulation class:** "F"
- **Mounting position:** Any
- **Condensate discharges:** None
- **Operation mode:** Continuous operation (S1)
- **Bearings:** Maintenance-free ball bearings

**Nominal data**

| Type | Motor | Curve | Nominal voltage VAC | Frequency Hz | Air flow m³/h | Speed / rpm rpm | Input power W | Input current A | Capacitor µF/VDB | Sound pressure level dB(A) | Max. back-pressure Pa | Perm. amb. temp. °C | Mass kg | Electrical connection |
|---|---|---|---|---|---|---|---|---|---|---|---|---|---|---|
| K2E 200-AA12 -01 | M2E 068-CF | A | 1~ 115 | 50 | 765 | 2650 | 64 | 0,56 | 6,0/250 | 64 | 200 | -25..+65 | 2,1 | p. 259 / A1) |
| | | B | 1~ 115 | 60 | 840 | 2910 | 88 | 0,77 | 6,0/250 | 64 | 240 | -25..+65 | 2,1 | |

Subject to alternations

**Curve:**

——— 50 Hz

- - - - - - 60 Hz

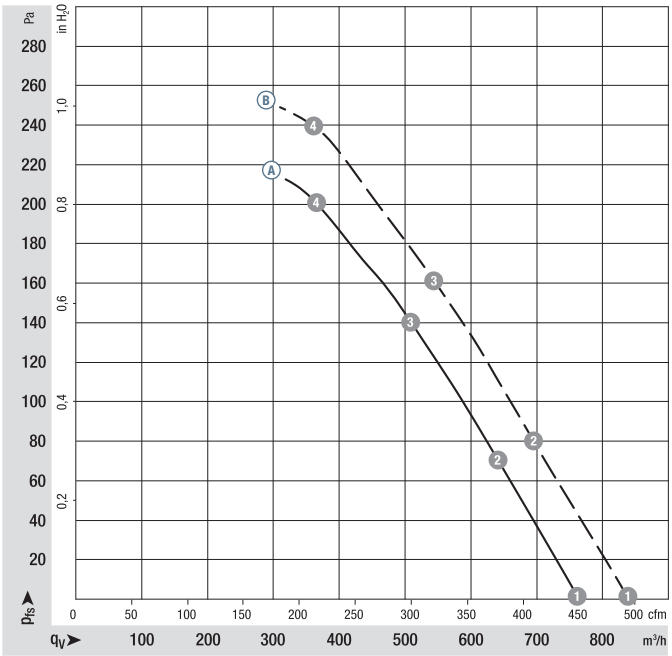


| | | n rpm | $P_{ed}$ W | I A | $L_WA$ dB(A) |
|---|---|---|---|---|---|
| A | 1 | 2650 | 64 | 0,56 | --- |
| A | 2 | 2610 | 67 | 0,59 | --- |
| A | 3 | 2580 | 70 | 0,61 | --- |
| A | 4 | 2590 | 69 | 0,61 | --- |
| B | 1 | 2910 | 88 | 0,77 | 72 |
| B | 2 | 2815 | 93 | 0,81 | 69 |
| B | 3 | 2755 | 96 | 0,84 | 69 |
| B | 4 | 2780 | 95 | 0,83 | 71 |

Air performance measured as per: ISO 5801, Installation category A, without protection against accidental contact. Suction-side noise levels: LWA as per ISO 13347, LpA measured at 1 m distance to fan axis. The acoustic values given are only valid under the measurment conditions listed and may vary depending on the installation situation. With any deviation to the standard setup, the specific values have to be checked and reviewed once installed or fitted! For detailed information see http://www.ebmpapst.com/general conditions



ebmpapst

- **Motor protection:** TOP wired internally
- **Touch current:** < 0,75 mA acc. to IEC 60990 (test circuit, illustration 4)
- **Cable exit:** Lateral
- **Electrical connection** Via connector
- **Protection class:** I (if customer has provided connection for protective earth)
- **Product conforming to standards:** EN 60335-1, CE
- **Approvals:** UL 2111, CSA C22.2 Nr. 77

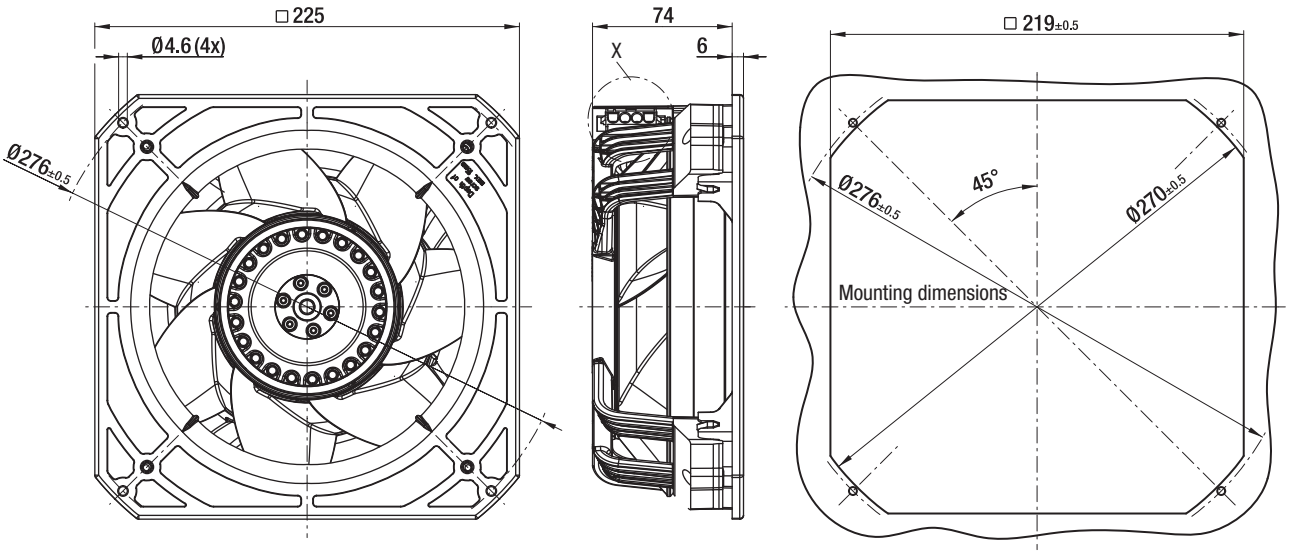


Coded plug system
Universal-Mate-N-Lok
Connector shell: AMP 350 780-1
3 x Pin connector: AMP 926 885-1
Mating connector (not part of delivery):
Connector shell: AMP 350 779-4
3 x female terminal: AMP 926 884-1

View X

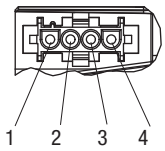


1 = not used
2 = N + condensator
3 = L
4 = PE

max. 850 m³/h

# AC diagonal module

## Ø 200 mm

- **Material:** Housing: Plastic PA
  Support bracket: Plastic PA
  Impeller: Plastic PA
  Rotor: Coated in black
- **Number of blades:** 7
- **Direction of air flow:** "V"
- **Direction of rotation:** Clockwise, seen on rotor
- **Type of protection:** IP 44, depending on installation and position
- **Insulation class:** "F"
- **Mounting position:** Any
- **Condensate discharges:** None
- **Operation mode:** Continuous operation (S1)
- **Bearings:** Maintenance-free ball bearings

**Nominal data**

| Type | Motor | Curve | Nominal voltage VAC | Frequency Hz | Air flow m³/h | Speed / rpm rpm | Input power W | Input current A | Capacitor µF/VDB | Sound pressure level dB(A) | Max. back-pressure Pa | Perm. amb. temp. °C | Mass kg | Electrical connection |
|---|---|---|---|---|---|---|---|---|---|---|---|---|---|---|
| K2E 200-AA52 -02 | M2E 068-CF | A | 1~ 230 | 50 | 765 | 2650 | 65 | 0,30 | 2,0/400 | 62 | 200 | -25..+75 | 2,1 | p. 259 / A1) |
| | | B | 1~ 230 | 60 | 850 | 2950 | 90 | 0,40 | 2,0/400 | 62 | 245 | -25..+75 | 2,1 | |

Subject to alternations

**Curve:**

——— 50 Hz

- - - - - - 60 Hz

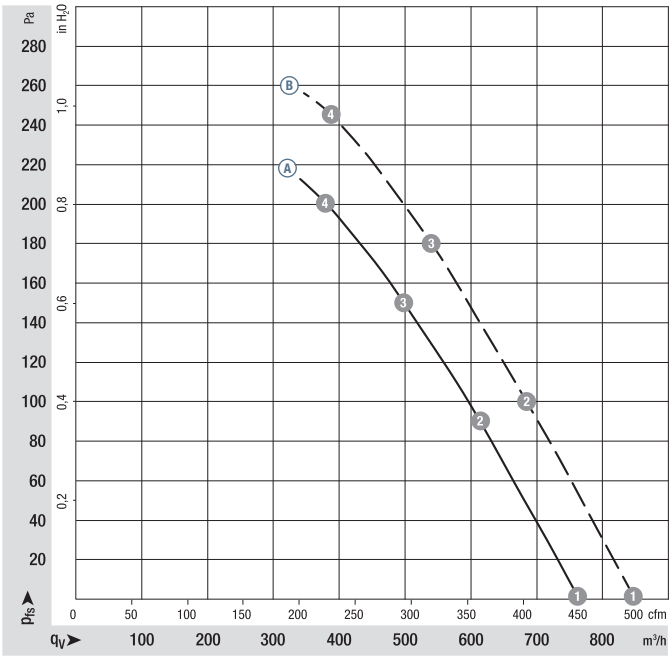


| | | n rpm | $P_{ed}$ W | I A | $L_WA$ dB(A) |
|---|---|---|---|---|---|
| A | 1 | 2650 | 65 | 0,30 | 70 |
| A | 2 | 2620 | 67 | 0,30 | 68 |
| A | 3 | 2605 | 68 | 0,30 | 67 |
| A | 4 | 2610 | 68 | 0,30 | 69 |
| B | 1 | 2950 | 90 | 0,40 | 73 |
| B | 2 | 2865 | 93 | 0,41 | 70 |
| B | 3 | 2820 | 96 | 0,42 | 69 |
| B | 4 | 2840 | 94 | 0,41 | 71 |

Air performance measured as per: ISO 5801, Installation category A, without protection against accidental contact. Suction-side noise levels: LWA as per ISO 13347, LpA measured at 1 m distance to fan axis. The acoustic values given are only valid under the measurment conditions listed and may vary depending on the installation situation. With any deviation to the standard setup, the specific values have to be checked and reviewed once installed or fitted! For detailed information see http://www.ebmpapst.com/general conditions



ebmpapst

- **Motor protection:** TOP wired internally
- **Touch current:** < 0,75 mA acc. to IEC 60990 (test circuit, illustration 4)
- **Cable exit:** Lateral
- **Electrical connection** Via connector
- **Protection class:** I (if customer has provided connection for protective earth)
- **Product conforming to standards:** EN 60335-1, CE
- **Approvals:** UL 2111, CSA C22.2 Nr. 77

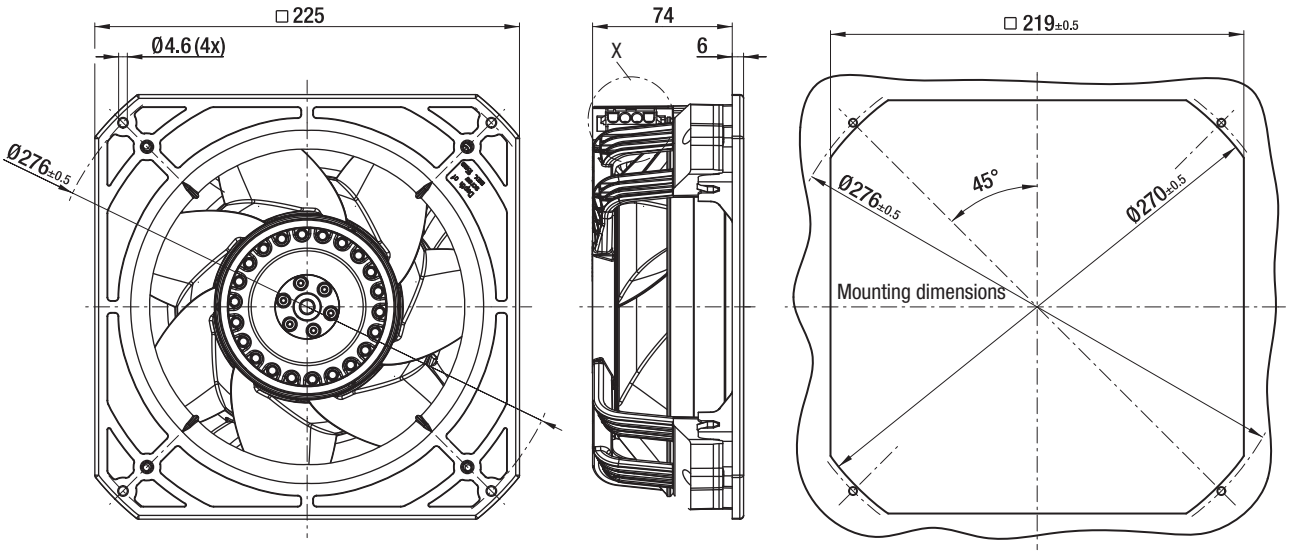


Coded plug system
Universal-Mate-N-Lok
Connector shell: AMP 350 780-1
3 x Pin connector: AMP 926 885-1
Mating connector (not part of delivery):
Connector shell: AMP 350 779-4
3 x female terminal: AMP 926 884-1

View X

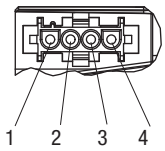


1 = not used
2 = N + condensator
3 = L
4 = PE

max. 880 m³/h

# AC diagonal module

## Ø 200 mm

- **Material:** Housing: Plastic PA
  Support bracket: Plastic PA
  Impeller: Plastic PA
  Rotor: Coated in black
- **Number of blades:** 7
- **Direction of air flow:** "V"
- **Direction of rotation:** Clockwise, seen on rotor
- **Type of protection:** IP 44, depending on installation and position
- **Insulation class:** "F"
- **Mounting position:** Any
- **Condensate discharges:** None
- **Operation mode:** Continuous operation (S1)
- **Bearings:** Maintenance-free ball bearings

**Nominal data**

| Type | Motor | Curve | Nominal voltage VAC | Frequency Hz | Air flow m³/h | Speed / rpm rpm | Input power W | Input current A | Capacitor µF/VDB | Sound pressure level dB(A) | Max. back-pressure Pa | Perm. amb. temp. °C | Mass kg | Electrical connection |
|---|---|---|---|---|---|---|---|---|---|---|---|---|---|---|
| K2D 200-AA02 -02 | M2D 068-CF | A | 3~ 400 Y | 50 | 780 | 2700 | 65 | 0,15 | --- | 62 | 210 | -25..+75 | 2,0 | p. 259 / C2) |
| | | B | 3~ 400 Y | 60 | 880 | 3050 | 90 | 0,16 | --- | 65 | 260 | -25..+75 | 2,0 | |

Subject to alternations

**Curve:**

——— 50 Hz

- - - - - - 60 Hz

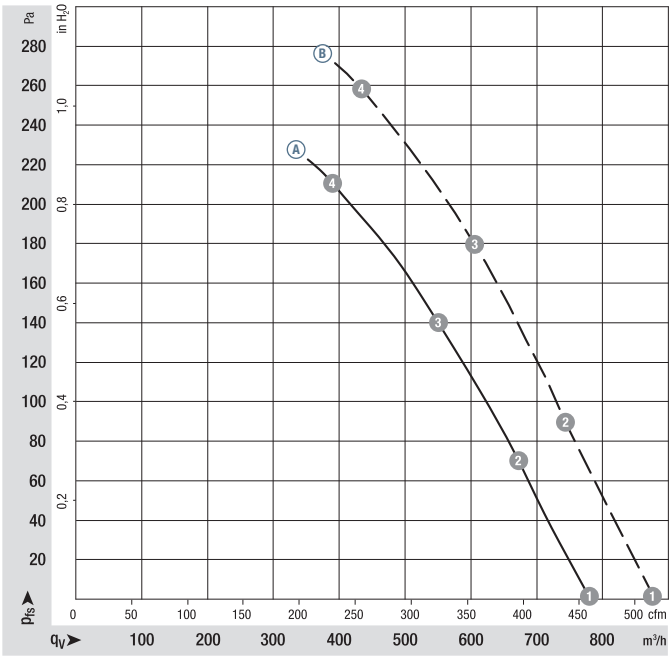


| | | n rpm | $P_{ed}$ W | I A | $L_WA$ dB(A) |
|---|---|---|---|---|---|
| A | 1 | 2700 | 65 | 0,15 | 71 |
| A | 2 | 2695 | 69 | 0,16 | 69 |
| A | 3 | 2675 | 71 | 0,16 | 68 |
| A | 4 | 2680 | 70 | 0,16 | 69 |
| B | 1 | 3050 | 90 | 0,16 | 73 |
| B | 2 | 3010 | 94 | 0,16 | 71 |
| B | 3 | 2970 | 98 | 0,17 | 70 |
| B | 4 | 2975 | 96 | 0,17 | 72 |

Air performance measured as per: ISO 5801, Installation category A, without protection against accidental contact. Suction-side noise levels: LWA as per ISO 13347, LpA measured at 1 m distance to fan axis. The acoustic values given are only valid under the measurment conditions listed and may vary depending on the installation situation. With any deviation to the standard setup, the specific values have to be checked and reviewed once installed or fitted! For detailed information see http://www.ebmpapst.com/general conditions



ebmpapst

- **Motor protection:** TOP wired internally
- **Touch current:** < 0,75 mA acc. to IEC 60990 (test circuit, illustration 4)
- **Cable exit:** Lateral
- **Electrical connection** Via connector
- **Protection class:** I (if customer has provided connection for protective earth)
- **Product conforming to standards:** EN 60335-1, CE

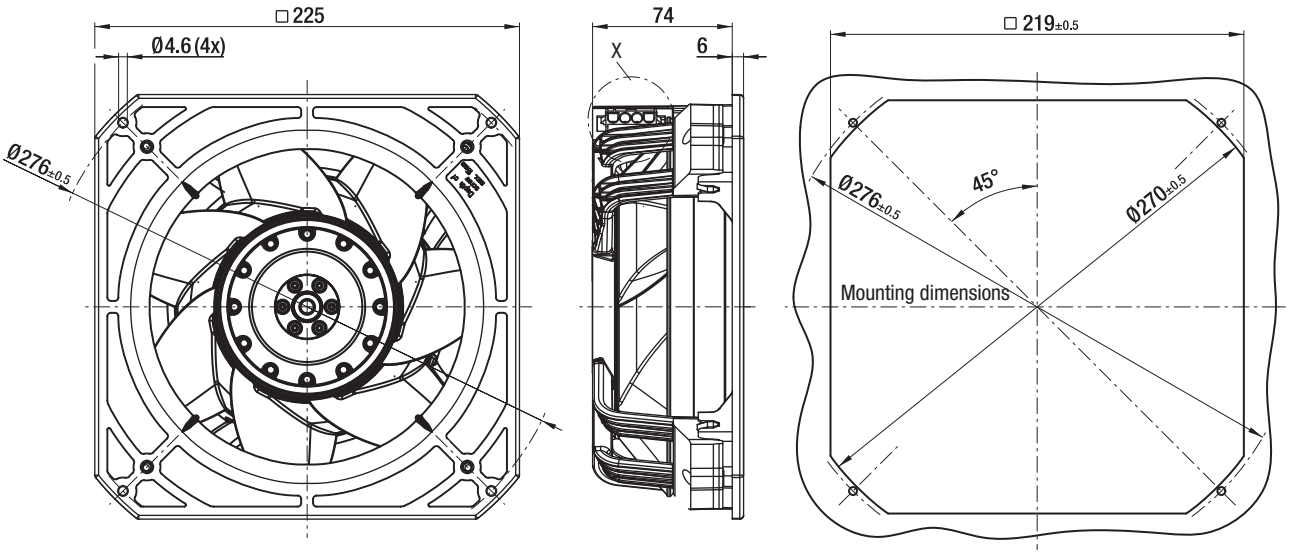


Coded plug system
Universal-Mate-N-Lok
Connector shell: AMP 350 780-1
3 x Pin connector: AMP 926 885-1
Mating connector (not part of delivery):
Connector shell: AMP 350 779-4
3 x female terminal: AMP 926 884-1

View X

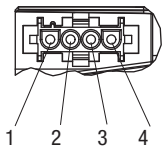


1 = L3
2 = L1
3 = L2
4 = PE

# AC centrifugal fans

AC centrifugal fan overview 229
AC centrifugal fans 230

# AC centrifugal fans

*Technical information*

**Product line**
The renowned ebm-papst AC fans are used when DC voltage is not available. The AC range of fans is based on experience gained from decades of development activity, millions of units in series production and competence in innovation of a world-wide technological leader.

A wide range of fans for AC operation is presented in this catalogue. In addition to complete device fans, you will also find fans without external housing, providing a particularly economical advantage when the air duct can be integrated in the respective device.

**Variety of sizes**
AC fans are available in a variety of sizes with either air exhaust or air intake over struts. Silent running models with sleeve bearings (or for extreme ambient conditions) fans with ball bearings are available. Electrical connection with plug connection or external leads are available.

**Shaded-pole or capacitor motors**
Fan drives by shaded-pole or capacitor motors, most of which incorporate the world-famous ebm-papst external rotor principle: The fan blades are directly attached to the external rotor of the external rotor motor, thus combining both high performance and profitability.

**Flat built AC fans**
ebm-papst also has particularly flat built AC fans with internal rotor motor. Their advantage: quick start to full speed. A plastic impeller and the both smaller and lighter internal rotor motor lead to a lower moment of inertia.

**Bearings**
AC fans with sleeve bearings are powered by Class E insulated motors. Fans with ball bearings are equipped with Class B, E or F insulated motors.

**Type of protection**
All ebm-papst fans conform to the requirements of IP 20. Fans conforming to IP 54 / IP 68 and special types of protection are also available.

**AC voltage**
The line of AC fans for Euro voltage according to IEC 60038 (230 V ± 10 %) is basically also available for 115 V.

**Frequencies**
AC fans can be operated at frequencies of 50 Hz or 60 Hz. However, their technical data then change accordingly.

**Capacitor**
Fans driven by capacitor external motors provide particularly high operating efficiency. Generally, the required operating capacitor is already integrated in the fan housing.

**Overloading**
Almost all AC fans are protected against overloading (e.g. due to locked rotor) the drive motors are either impedance protected (marked “Impedance protected”, and/or “Z.P.”) or are equipped with a thermal switch (marked “Thermally protected” or “Th.P.”). The model designation of these fans ends with “S”.

# Centrifugal fans for AC operation

## Overview of air performance

| Dimension | Series | Air flow | Page |
|---|---|---|---|
| mm | | m³/h | |
| □ 121 x 37 | RL 90 | 40...42 | 230 |
| □ 135 x 38 | RG 90 | 47...54 | 231 |
| □ 180 x 40 | RG 125 | 86...94 | 232 |
| □ 220 x 56 | RG 160 | 202...223 | 233 |
| Ø 138 x 40 | RER 125 | 104...115 | 234 |
| Ø 176 x 54 | RER 160 | 234...274 | 235 |

Subject to alternations

## Overview of technically feasible designs

| Dimension | VDE, UL, CSA | Sintec sleeve bearings/ ball bearings | Speed signal | Humidity protection | IP >= IP 54 | IP >= IP 68 | Salt fog protection | Page |
|---|---|---|---|---|---|---|---|---|
| **Centrifugal fans** | | | | | | | | |
| **Series** | **mm** | | **OPTIONAL** | | | | | **p.** |
| RL 90 | 121 x 121 x 37 | ja | □/■ | – | • | • | – | • | 230 |
| RG 90 | 135 x 135 x 38 | ja | □/■ | – | • | • | – | • | 231 |
| RG 125 | 180 x 180 x 40 | ja | ■ | – | • | • | – | • | 232 |
| RG 160 | 220 x 220 x 56 | ja | ■ | – | • | • | – | • | 233 |
| RER 125 | 138 Ø x 40 | ja | ■ | – | • | • | – | • | 234 |
| RER 160 | 176 Ø x 54 | ja | ■ | – | • | • | – | • | 235 |

Subject to alternations

• availabe – not yet available □ Sleeve bearings ■ Ball bearings

max. 42 m³/h

# AC centrifugal fans

## Series RL 90 121 x 121 x 37 mm

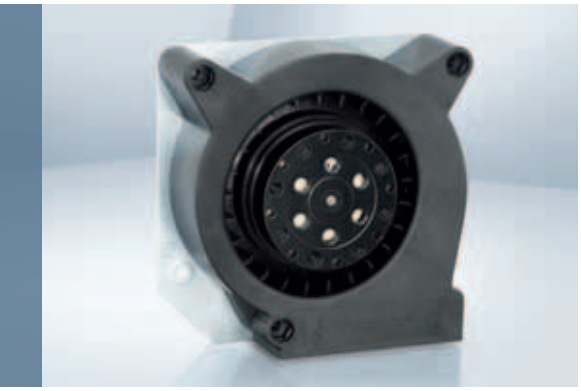

- **Material:** Spiral housing: GRP[1] (PBT)
  Impeller: GRP[1] (PA)
  Housing base: Steel plate
- **Direction of air flow:** Centrifugal: Air outlet via window in housing
- **Direction of rotation:** Clockwise, seen on rotor
- **Connection:** Via 2 single wires; housing base with flat plugs 6,3 x 0,8 mm for protective earth conductor
- **Highlights:** forwards-curved impeller
- **Mass:** 680 g

1) Fibreglass-reinforced plastic

- **Possible special versions:**
  (See page 12)
  - Protection against moisture
  - Protection against salt fog
  - Type of protection: IP 54

| Nominal data | Air flow | Air flow | Nominal voltage | Frequency | Sound power level | Sintec sleeve bearings / Ball bearings | Input power | Nominal speed | Temperature range | Service life $L_{10}$ at 40 °C / at $T_{max}$ | Curve |
|---|---|---|---|---|---|---|---|---|---|---|---|
| **Type** | **m³/h** | **CFM** | **V** | **Hz** | **Bel(A)** | □/■ | **Watts** | **rpm** | **°C** | **Hours / Hours** | |
| RL 90-18/50 | 40 | 23,5 | **230** | **50** | 5,6 | □/ | 20,0 | 2 450 | -10...+50 | 37 500 / 30 000 | ① |
| RL 90-18/56 | 40 | 23,5 | **230** | **50** | 5,6 | /■ | 20,0 | 2 450 | -30...+70 | 37 500 / 20 000 | ① |
| RL 90-18/00 | 42 | 24,7 | **115** | **60** | 6,0 | □/ | 19,5 | 2 550 | -10...+60 | 37 500 / 25 000 | ② |
| RL 90-18/06 | 42 | 24,7 | **115** | **60** | 6,0 | /■ | 19,5 | 2 550 | -30...+85 | 37 500 / 15 000 | ② |

Subject to alternations

| Fan type | | Lead wires |
|---|---|---|
| RL 90-18/50 | RL 90-18/00 | AWG 18, TR 32 |
| RL 90-18/56 | RL 90-18/06 | AWG 22 |

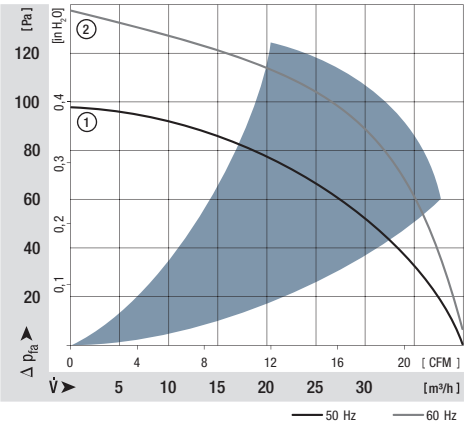


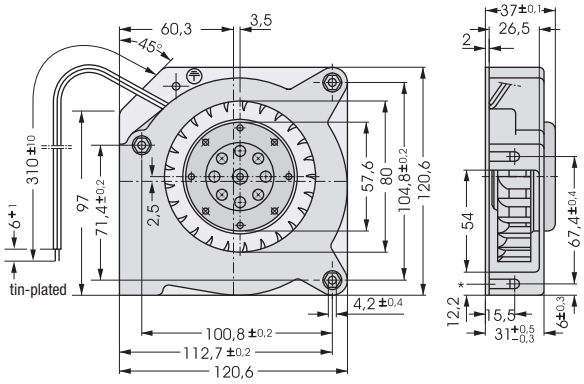


*Speed nut M4 or 8-32UNC. Screw- in depth max.12,5 min 9,0



ebmpapst

max. 54 m³/h

# AC centrifugal fans

## Series RG 90 135 x 135 x 38 mm

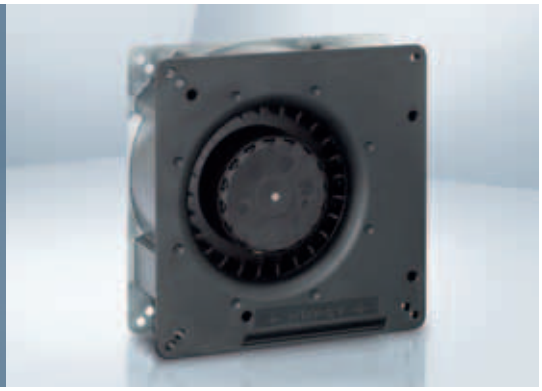

- **Material:** Spiral housing: GRP[1)] (PBT)
  Impeller: GRP[1)] (PA)
  Housing base: Steel plate
- **Direction of air flow:** Centrifugal: Air outlet via window in housing
- **Direction of rotation:** Clockwise, seen on rotor
- **Connection:** Via 2 single wires AWG 22
- **Highlights:** forwards-curved impeller
- **Mass:** 560 g

- **Possible special versions:**
  (See page 12)
  - Protection against moisture
  - Protection against salt fog
  - Type of protection: IP 54

1) Fibreglass-reinforced plastic

| Nominal data | Air flow | Air flow | Nominal voltage | Frequency | Sound power level | Sintec sleeve bearings / Ball bearings | Input power | Nominal speed | Temperature range | Service life $L_{10}$ at 40 °C | at $T_{max}$ | Curve |
|---|---|---|---|---|---|---|---|---|---|---|---|---|
| **Type** | **m³/h** | **CFM** | **V** | **Hz** | **Bel(A)** | □/■ | **Watts** | **rpm** | **°C** | **Hours** | **Hours** | |
| RG 90-18/50 | 54 | 32 | **230** | **50** | 5,8 | □/ | 22,0 | 2 200 | -30...+60 | 35 000 / 22 500 | | ① |
| RG 90-18/56 | 54 | 32 | **230** | **50** | 5,8 | /■ | 22,0 | 2 200 | -30...+60 | 35 000 / 22 500 | | ① |
| RG 90-18/00 | 47 | 28 | **115** | **60** | 6,2 | □/ | 22,0 | 1 900 | -30...+65 | 35 000 / 20 000 | | ② |
| RG 90-18/06 | 47 | 28 | **115** | **60** | 6,2 | /■ | 22,0 | 1 900 | -30...+65 | 35 000 / 20 000 | | ② |

Subject to alternations

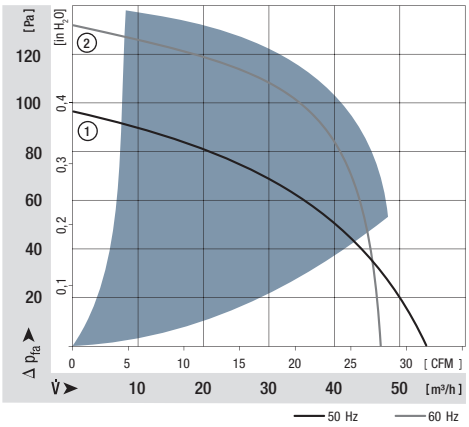


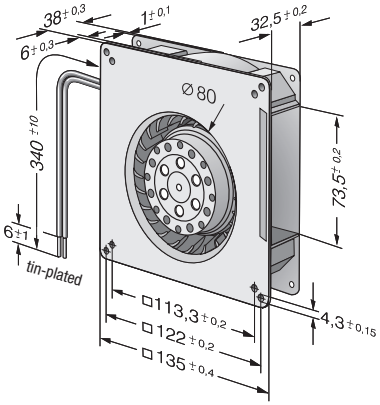

max. 94 m³/h

# AC centrifugal fans

## Series RG 125 180 x 180 x 40 mm

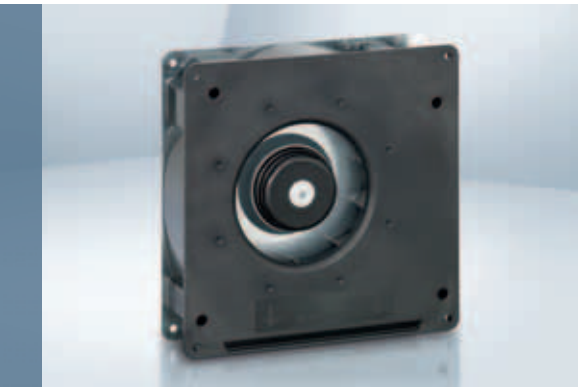

- **Material:** Spiral housing: GRP[1)] (PBT)
  Impeller: GRP[1)] (PA)
  Housing base: Steel plate
- **Direction of air flow:** Centrifugal: Air outlet via window in housing
- **Direction of rotation:** Clockwise, seen on rotor
- **Connection:** Via 2 single wires AWG 22
- **Highlights:** backwards-curved impeller
- **Mass:** 850 g

- **Possible special versions:**
  (See page 12)
  - Protection against moisture
  - Protection against salt fog
  - Type of protection: IP 54

1) Fibreglass-reinforced plastic

| Nominal data | Air flow | Air flow | Nominal voltage | Frequency | Sound power level | Sintec sleeve bearings / Ball bearings | Input power | Nominal speed | Temperature range | Service life $L_{10}$ at 40 °C / at $T_{max}$ | Curve |
|---|---|---|---|---|---|---|---|---|---|---|---|
| **Type** | **m³/h** | **CFM** | **V** | **Hz** | **Bel(A)** | **□/■** | **Watts** | **rpm** | **°C** | **Hours / Hours** | |
| RG 125-19/56 | 86 | 51 | **230** | **50** | 5,8 | /■ | 20,0 | 2 550 | -30...+70 | 37 500 / 20 000 | ① |
| RG 125-19/06 | 94 | 55 | **115** | **60** | 6,0 | /■ | 19,0 | 2 750 | -30...+80 | 40 000 / 15 000 | ② |

Subject to alternations

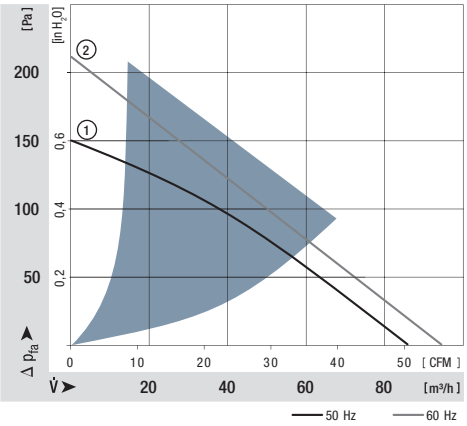


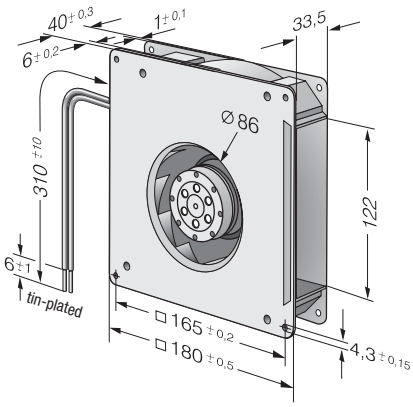




Guard grilles
from p. 238

ebmpapst

max. 223 m³/h

# AC centrifugal fans

## Series RG 160 220 x 220 x 56 mm

- **Material:** Spiral housing: GRP[1)] (PBT)
  Impeller: GRP[1)] (PA)
  Housing base: Steel plate
- **Direction of air flow:** Centrifugal: Air outlet via window in housing
- **Direction of rotation:** Counter-clockwise, seen on rotor
- **Connection:** Via 2 single wires AWG 18
- **Highlights:** backwards-curved impeller
- **Mass:** 1,7 kg

- **Possible special versions:**
  (See page 12)
  - Protection against moisture

1) Fibreglass-reinforced plastic

| Nominal data | Air flow | Air flow | Nominal voltage | Frequency | Sound power level | Sintec sleeve bearings / Ball bearings | Input power | Nominal speed | Temperature range | Service life $L_{10}$ at 40 °C | at $T_{max}$ | Curve |
|---|---|---|---|---|---|---|---|---|---|---|---|---|
| **Type** | **m³/h** | **CFM** | **V** | **Hz** | **Bel(A)** | □/■ | **Watts** | **rpm** | **°C** | **Hours** | **Hours** | |
| RG 160-28/56S | 202 | 119 | **230** | **50** | 6,6 | /■ | 47,0 | 2 750 | -30...+70 | 30 000 / 15 000 | | ① |
| RG 160-28/06S | 223 | 131 | **115** | **60** | 6,9 | /■ | 50,0 | 3 050 | -30...+80 | 27 500 / 12 500 | | ② |

Subject to alternations

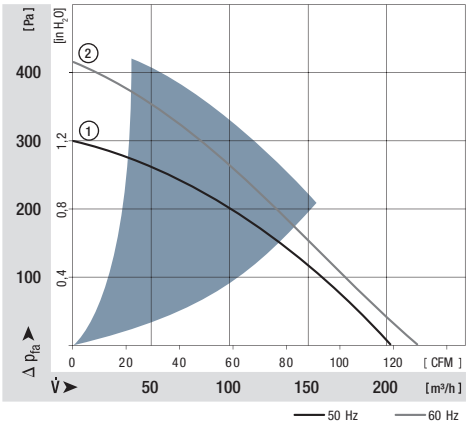


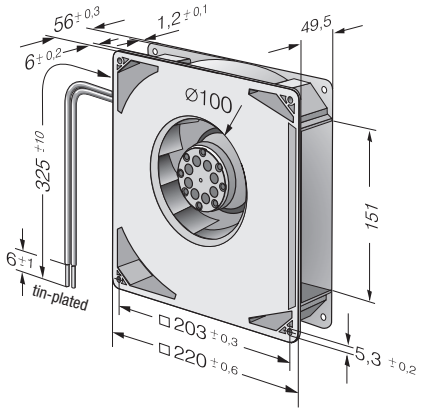




Guard grilles
from p. 238

max. 115 m³/h

# AC centrifugal fans

## Series RER 125 138 Ø x 40 mm

- **Material:** Spiral housing: GRP[1)] (PBT)
  Impeller: GRP[1)] (PA)
  with steel plate reinforced
- **Direction of air flow:** centrifugal
- **Direction of rotation:** Clockwise, seen on rotor
- **Connection:** Via 2 single wires AWG 22
- **Highlights:** backwards-curved impeller
- **Mass:** 500 g

- **Possible special versions:**
  (See page 12)
  - Protection against moisture
  - Protection against salt fog
  - Type of protection: IP 54

1) Fibreglass-reinforced plastic

| Nominal data | Air flow | Air flow | Nominal voltage | Frequency | Sound power level | Sintec sleeve bearings / Ball bearings | Input power | Nominal speed | Temperature range | Service life $L_{10}$ at 40 °C | at $T_{max}$ | Curve |
|---|---|---|---|---|---|---|---|---|---|---|---|---|
| **Type** | **m³/h** | **CFM** | **V** | **Hz** | **Bel(A)** | □/■ | **Watts** | **rpm** | **°C** | **Hours** | **Hours** | |
| RER 125-19/56 | 104 | 61 | **230** | **50** | 6,2 | /■ | 19,0 | 2 600 | -30...+60 | 37 500 / 22 500 | | ① |
| RER 125-19/06 | 115 | 68 | **115** | **60** | 6,5 | /■ | 18,0 | 2 850 | -30...+70 | 40 000 / 20 000 | | ② |

Subject to alternations

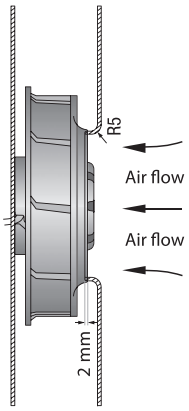


The air flow and noise level of fans without external housing depend on the installation conditions. The stated air flow and noise levels have been measured under the following conditions:
Centrifugal fan mounted on a base plate 220 x 220 mm.
Cover plate 220 x 220 mm with an air inlet of Ø 86 mm, concentric to the impeller.

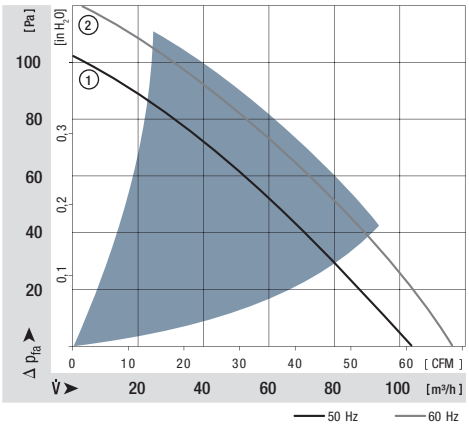


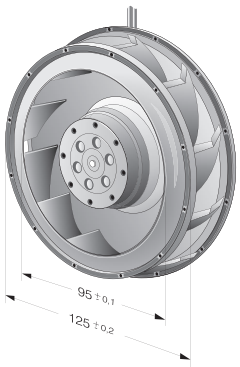


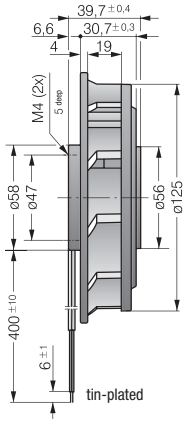

max. 274 m³/h

# AC centrifugal fans

## Series RER 160 176 Ø x 54 mm

- **Material:** Spiral housing: GRP[1)] (PBT)
  Impeller: GRP[1)] (PA)
  with steel plate reinforced
- **Direction of air flow:** centrifugal
- **Direction of rotation:** Counter-clockwise, seen on rotor
- **Connection:** Via 2 single wires AWG 18
- **Highlights:** backwards-curved impeller
- **Mass:** 1,0 kg

- **Possible special versions:**
  (See page 12)
  - Protection against moisture

1) Fibreglass-reinforced plastic

| Nominal data | Air flow | Air flow | Nominal voltage | Frequency | Sound power level | Sintec sleeve bearings / Ball bearings | Input power | Nominal speed | Temperature range | Service life $L_{10}$ at 40 °C | at $T_{max}$ | Curve |
|---|---|---|---|---|---|---|---|---|---|---|---|---|
| **Type** | **m³/h** | **CFM** | **V** | **Hz** | **Bel(A)** | □/■ | **Watts** | **rpm** | **°C** | **Hours** | **Hours** | |
| RER 160-28/56S | 234 | 138 | **230** | **50** | 6,6 | /■ | 45,0 | 2 800 | -30...+60 | 30 000 / 20 000 | | ① |
| RER 160-28/06S | 274 | 161 | **115** | **60** | 6,8 | /■ | 46,0 | 3 250 | -30...+70 | 30 000 / 15 000 | | ② |

Subject to alternations

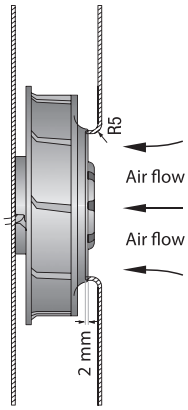


The air flow and noise level of fans without external housing depend on the installation conditions. The stated air flow and noise levels have been measured under the following conditions:
Centrifugal fan mounted on a base plate 260 x 260 mm.
Cover plate 260 x 260 mm with an air inlet of Ø 100 mm, concentric to the impeller.

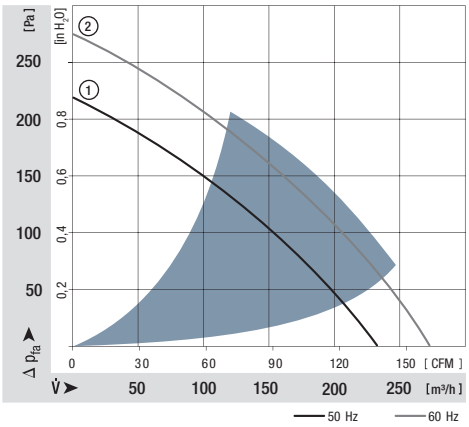


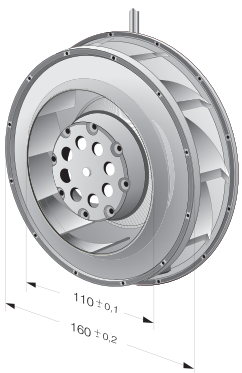


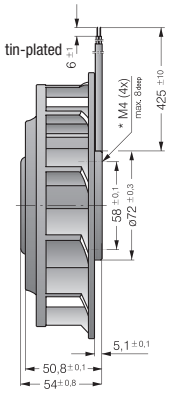

# Accessories

| | |
|---|---|
| Guard grilles | **238** |
| Fan filter guard grilles | **246** |
| Inlet nozzles | **248** |
| Connection cables / Accessories | **251** |
| Electrical connections | **254** |


Everything that you need for your fan. ebm-papst provides an extensive range of accessories for optimum fan operation: From temperature sensing for speed-controlled fans to finger guards of all types, connecting cable, filter, screens, spacers and assembly parts. In addition to the accessories and assembly parts listed in this catalogue, ebm-papst also supplies numerous special parts for fan operation. The sales experts at ebm-papst will be happy to assist you in your enquiries concerning fan assembly and application.

From selection to accessories: Insist on the efficient and reliable service provided by ebm-papst.

# Guard grilles

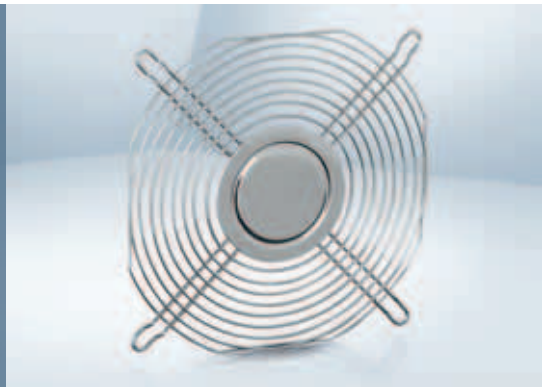

- **Material:** Zinc-plated or nickel-plated steel wire
- **Note:** Safety grille in line with DIN EN ISO 13857 (previously EN 294).
  Additional safety grilles that do not meet DIN EN ISO 13857 can be delivered on request.
  Our safety grilles are designed specifically for use with ebm-papst fans.
  They combine the highest degree of safety with minimum effect on operating noise. Please note that safety-relevant clearances cannot be guaranteed when using safety grilles from other manufacturers.

| Fan series | Guard grilles |
|---|---|
| 400 | LZ29-1 |
| 420 J | LZ29-1 |
| 500 | LZ31 |
| 600 | LZ28-1 |
| 3000 | LZ23-1 |
| 8000 | LZ32-4 / LZ22-2 |
| 9000 | LZ30-4 / LZ 30 / LZ 30-3 |
| 4000 | LZ30-4 / LZ 30 / LZ 30-3 |

| Fan series | Guard grilles |
|---|---|
| 5100 | LZ25 |
| 5600 | LZ25 |
| 5200 | LZ35 |
| 5300 | LZ53 |
| 5900 | LZ35 |
| 7000 | LZ36 |
| 6300 | LZ37 |
| 6400 | LZ38 |

| Fan series | Guard grilles | |
|---|---|---|
| 2200 F | LZ22 | |
| DV 4100 | LZ30-4 | Intake-/Outlet side |
| DV 5200 | LZ35 | Intake-/Outlet side |
| DV 6300 | LZ37 | Intake side |
| DV 6300 | LZ52 | Outlet side |
| DV 6400 | LZ38 | Intake side |
| DV 6400 | LZ39 | Outlet side |

Subject to alternations

**LZ29-1** — **Fan size 40 x 40**

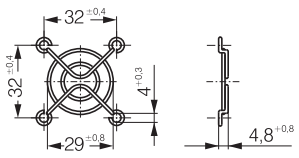


**LZ31** — **Fan size 50 x 50**

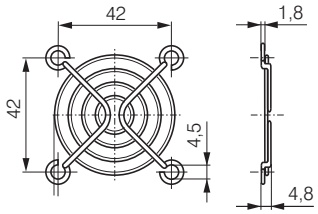


**LZ28-1** — **Fan size 60 x 60**

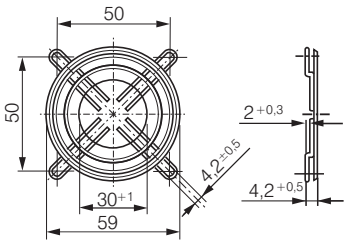


**LZ22-2** — **Fan size 80 x 80**

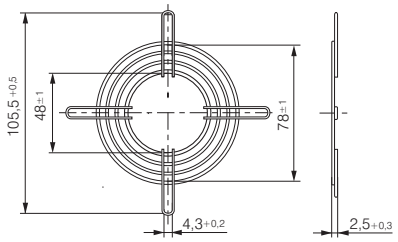


**LZ32-4** — **Fan size 80 x 80**

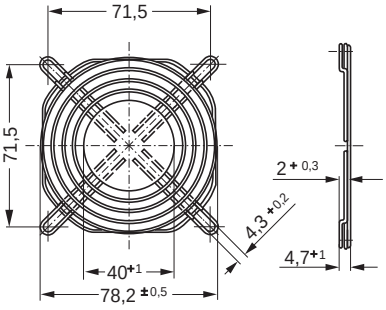


**LZ23-1** — **Fan size 92 x 92**

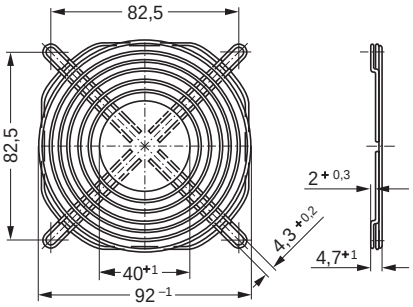




ebmpapst

## LZ30 — Fan size 119 x 119

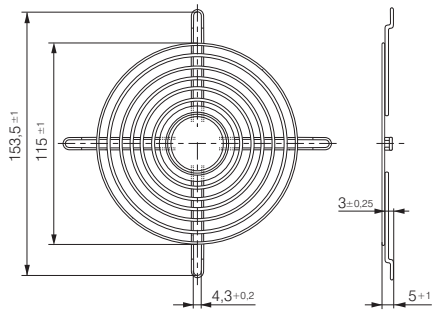


## LZ30-3 — Fan size 119 x 119

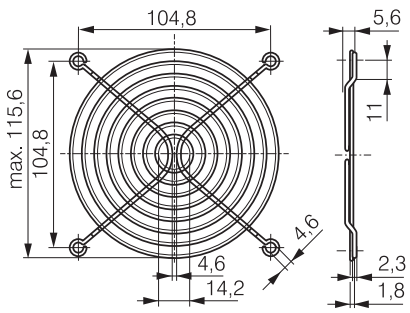


## LZ30-4 — Fan size 119 x 119

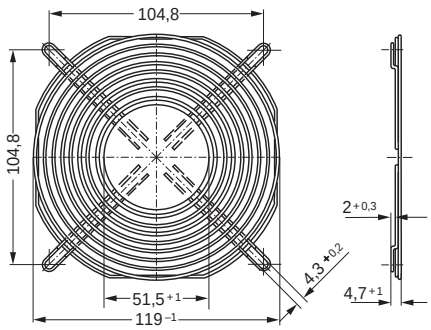


## LZ35 — Fan size 127 x 127

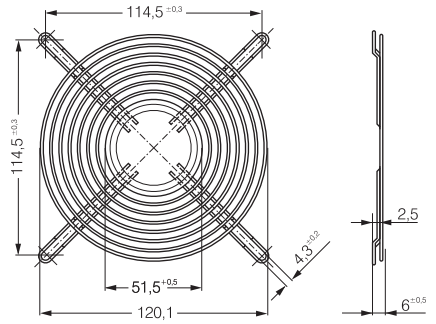


## LZ25 — Fan size 135 x 135

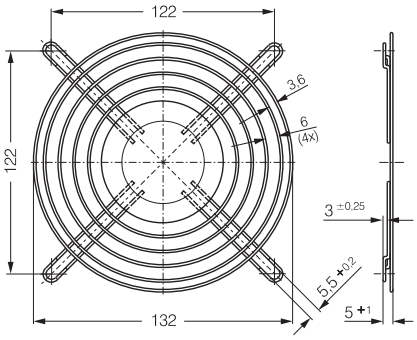


## LZ53 — Fan size 140 x 140

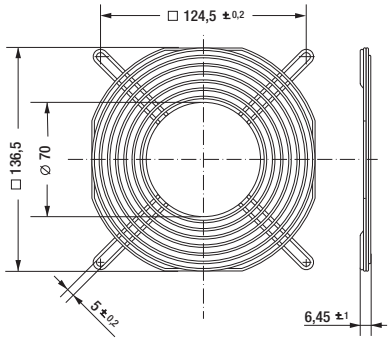


## LZ36 — Fan size 150 x 172

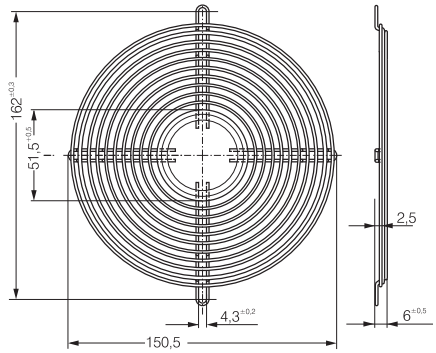


## LZ37 — Fan size 172 x 51

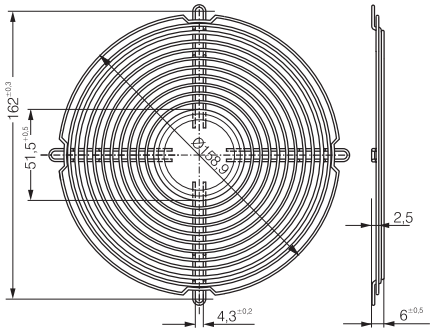


## LZ38 — Fan size 172 x 51

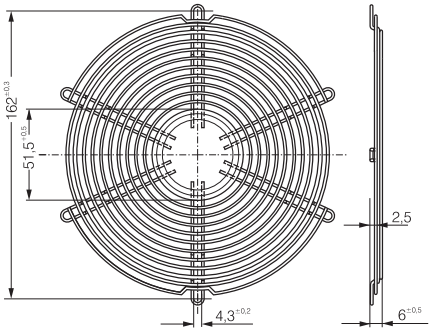


## LZ39 — Fan size 172 x 51

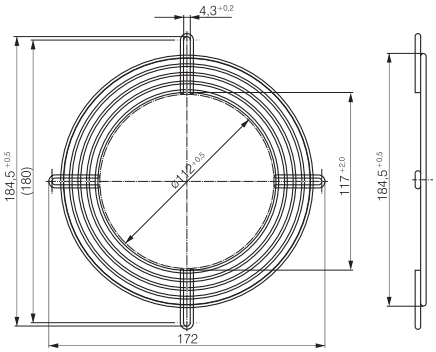


## LZ52 — Fan size 172 x 51

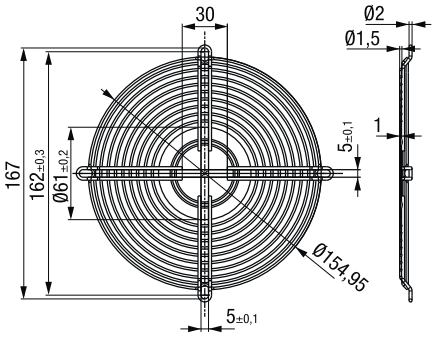


## LZ22 — Fan size 200 x 51

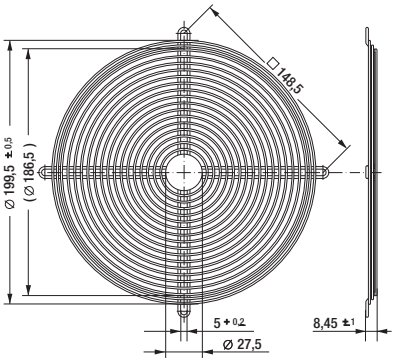

# Guard grilles

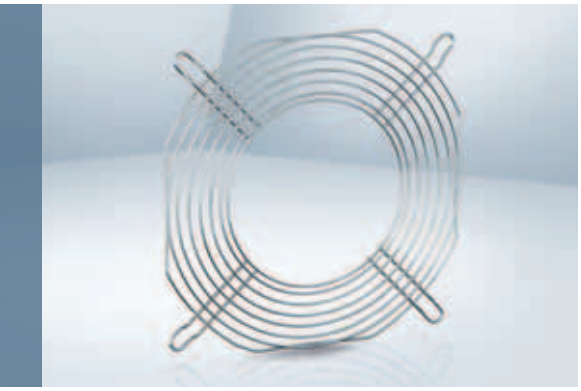

- **Material:** Zinc-plated or nickel-plated steel wire
- **Note:** Safety grille in line with DIN EN ISO 13857 (previously EN 294).
  The safety grilles detailed on this page are intended specifically for the ACmaxx / GreenTech EC compact fan ranges and are mounted on the pressure side.

| Fan series | Guard grilles | |
|---|---|---|
| AC 8300 | LZ32-4 | Intake side |
| AC 8300 H | LZ32-7 | Outlet side |
| AC 3200 J | LZ23-1 | Intake side |
| AC 3200 J | LZ23-6 | Outlet side |
| AC 4400 FN | LZ30-4 | Intake side |
| AC 4400 FN | LZ30-9 | Outlet side |
| AC 4300 | LZ30-4 | Intake side |
| AC 4300 | LZ30-9 | Outlet side |

| Fan series | Guard grilles | |
|---|---|---|
| ACi 4400 | LZ30 | Intake side |
| ACi 4400 | LZ30 | Outlet side |
| AC 6200 N | LZ37 | Intake side |
| AC 6200 N | LZ37-2 | Outlet side |
| AC 6100 N | LZ37 | Intake side |
| AC 6100 N | * | Outlet side |

* Outlet-side grilles on request

**LZ30-9** — **Fan size 119 X 119**

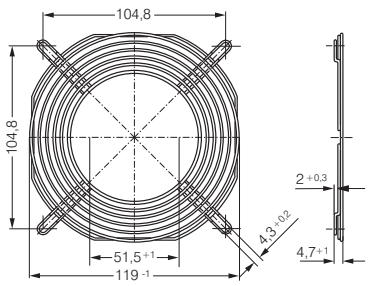


**LZ37-2** — **Fan size Ø 172 X 51**

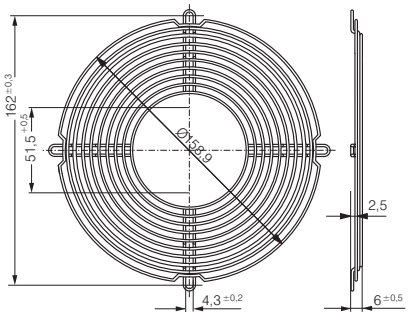


**LZ23-6** — **Fan size 92 x 92**

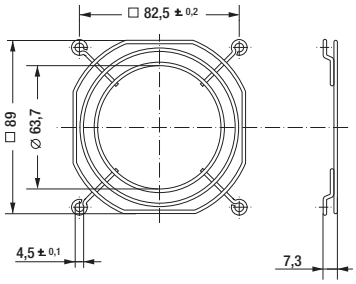


**LZ32-7** — **Fan size 80 x 80**

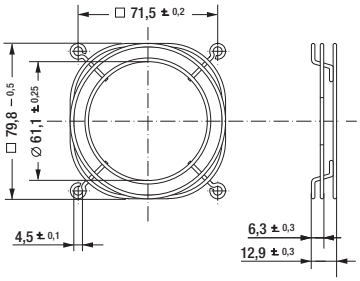




ebmpapst

# Guard grilles

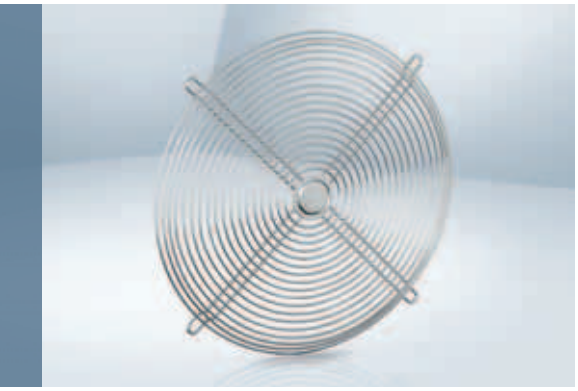

– **Material:** Steel wire, plastic-coated, silver-metallic gloss

| Fan series | Guard grilles |
|---|---|
| W1G 200 | 78128-2-4039 |
| W2E 200 | 78128-2-4039 |

| Fan series | Guard grilles |
|---|---|
| W1G 250 | 09418-2-4039 |
| W2E 250 | 09418-2-4039 |

**78128-2-4039** **Size 200**

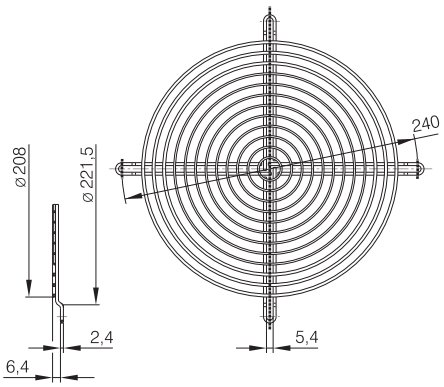


**09418-2-4039** **Size 250**

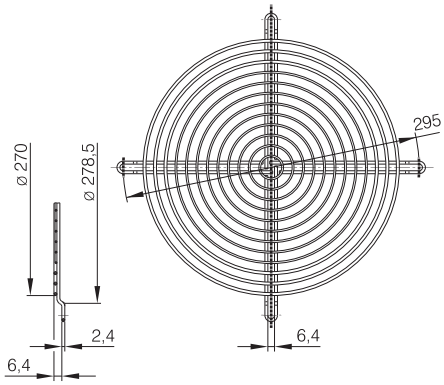

# Guard grilles

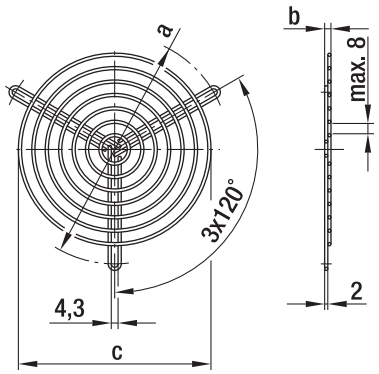


– **Material:** Steel wire

**Guard grilles for centrifugal blowers with dual inlet**

| Part no. | Size | a | b | c | Coating |
|---|---|---|---|---|---|
| **83319-2-4039** | 097 (1) | 96,0 | 3,5 | 71,0 | phosphated, plastic-coated in RAL no. 9005 |
| **09485-2-4039** | 097 (2) | 114,0 | 3,5 | 88,0 | phosphated, plastic-coated in RAL no. 9005 |
| **09500-2-4039** | 133 / 146 | 145,0 | 4,0 | 122,0 | phosphated, plastic-coated in RAL no. 9005 |

Subject to alternations (1) for D2E097-CH (2) for D2E097-B*

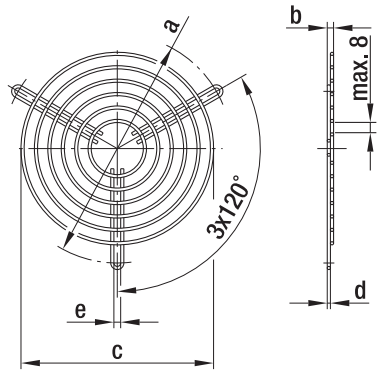


– **Material:** Phosphated steel wire, plastic-coated, silver-metallic gloss

**Guard grilles for centrifugal blowers with dual inlet** (versions with EW motor)

| Part no. | Size | a | b | c | d | e |
|---|---|---|---|---|---|---|
| **35000-2-4039** | 160 | 182,0 | 12,0 | 144,0 | 2,4 | 4,5 |

Subject to alternations

# Guard grilles

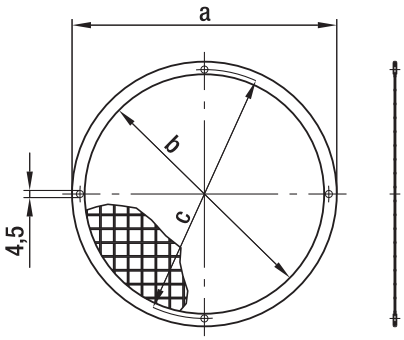


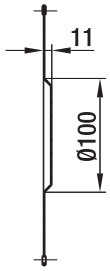


(4) Size 160

– **Material:** Welded grille made of galvanised steel, frame made of tinned sheet iron 0.4 mm thick

**Guard grilles for centrifugal blowers with single inlet**

| Part no. | Size | a | b | c |
|---|---|---|---|---|
| **09489-2-4039** | 085 (3) | 90,0 | 74,0 | 84,0 |
| **09490-2-4039** | 108 | 126,0 | 110,0 | 118,0 |
| **09494-2-4039** | 120 | 140,0 | 124,0 | 132,0 |
| **09492-2-4039** | 140 / 146 | 168,0 | 152,0 | 158,0 |
| **09503-2-4039** | 160 (4) | 183,0 | 170,0 | 175,0 |

Subject to alternations (3) 3 drilled holes staggered by 120°

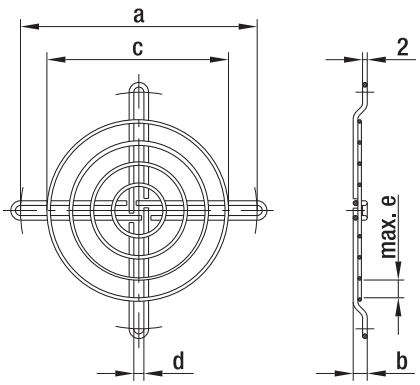


– **Material:** steel wire

**Guard grilles for centrifugal blowers with single inlet**

| Part no. | Size | a | b | c | d | e | Coating |
|---|---|---|---|---|---|---|---|
| **09603-2-4039** | 076 / 085 | 101,0 | 6,0 | 79,0 | 4,3 | 8,0 | plastic coated, silver-metallic gloss |
| **98214-2-4039** | 108 | 120,0 | 3,5 | 88,0 | 4,3 | 8,0 | plastic coated, silver-metallic gloss |
| **25028-2-4039** | 140 / 146 | 162,0 | 8,5 | 139,0 | 4,3 | 8,0 | galvanised, chromatised in blue |
| **17729-2-4039** | 160 | 175,0 | 3,5 | 139,0 | 4,6 | 7,0 | galvanised, chromatised in blue |

Subject to alternations

# Guard grilles

- **Material:** Fibreglass-reinforced plastic
- **Note:** Guard grille acc. to DIN EN ISO 13857 (previously EN 294).
  Plastic grilles must not be used for the following models:
  8200 JH3 / JH4
  3200 JH3 / JH4
  4100 NH5 - NH8

| Guard grilles | Mounting | B | C | D | E |
|---|---|---|---|---|---|
| LZ28-3 | A3 | $60^{-0,5}$ | $50,0^{\pm 0,2}$ | 3,0 | 24 |
| LZ32-2 | A1 | $80^{-0,5}$ | $71,5^{\pm 0,2}$ | 7,0 | 34 |
| LZ32-3 | A3 | $80^{-0,5}$ | $71,5^{\pm 0,2}$ | 7,0 | 34 |
| LZ23-2 | A1 | $92,5^{-0,5}$ | $82,5^{\pm 0,2}$ | 6,5 | 46 |
| LZ23-3 | A3 | $92,5^{-0,5}$ | $82,5^{\pm 0,2}$ | 6,5 | 46 |

| Guard grilles | Mounting | B | C | D | E |
|---|---|---|---|---|---|
| LZ30-5 | A2 | $119^{-0,5}$ | $105^{\pm 0,2}$ | 6,5 | 50 |
| LZ30-6 | A4 | $119^{-0,5}$ | $105^{\pm 0,2}$ | 6,5 | 50 |
| LZ33-1 | A2 | $127^{-0,5}$ | $113,5^{\pm 0,2}$ | 6,5 | 50 |
| LZ33-2 | A4 | $127^{-0,5}$ | $113,5^{\pm 0,2}$ | 6,5 | 50 |

Subject to alternations

| | |
|---|---|
| LZ28-3 | Size 60 x 60 |
| LZ32-2 / LZ32-3 | Size 80 x 80 |
| LZ23-2 / LZ23-3 | Size 92 x 92 |
| LZ30-5 / LZ30-6 | Size 119 x 119 |
| LZ33-1 / LZ33-2 | Size127 x 127 |

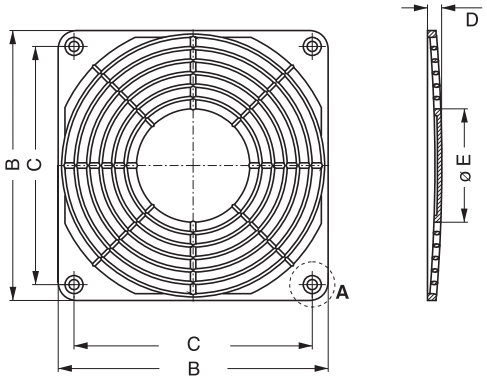


Screw connection

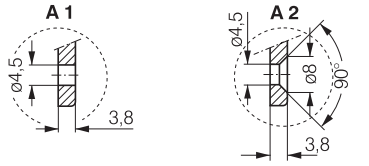


Barbed inserts

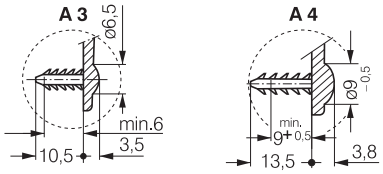


Only suitable for bore hole diameter
¯4,3 - ¯4,7.

| | |
|---|---|
| LZ28-3 | Fan size 60 x 60 |

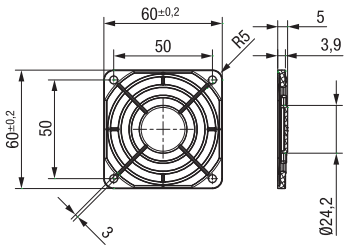


| | |
|---|---|
| LZ32P | Fan size 80 x 80 |

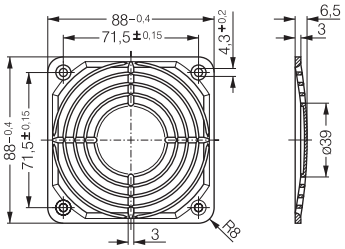


| | |
|---|---|
| LZ30P | Fan size 119 x 119 |

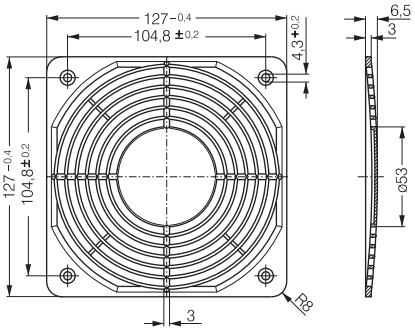




ebmpapst

# Guard grilles

## for compact centrifugal modules

- **Material:** Fibreglass-reinforced plastic PA
- **Highlights:** Flame protection class in line with UL 94V-0

| Fan series | Guard grilles | a | b |
|---|---|---|---|
| RG 175/190 | LZ46-1 | 133 | 9,0 |
| RG 220 | LZ47-1 | 166 | 8,7 |
| RG 225 | LZ48-1 | 158 | 8,7 |

Subject to alternations

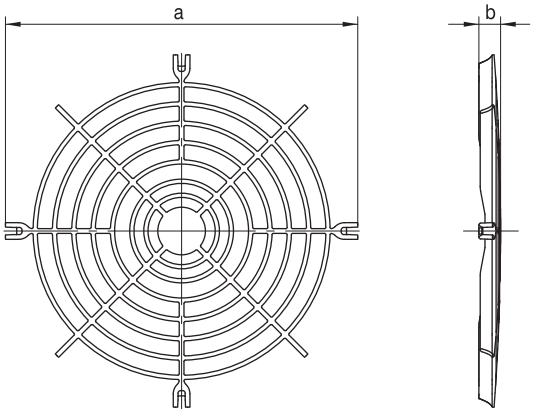

# Fan filter guard grilles

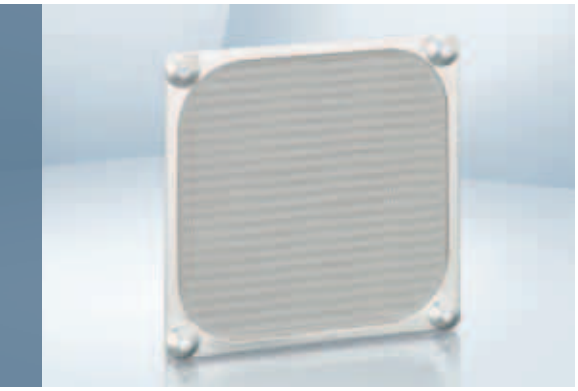

– **Material:** Filter guard LZ40 N: black, fibreglass-reinforced plastic with inserted wire mesh LZ60.
Filter LZ60: stainless steel wire mesh
Mounting lug LZ40-1 for mounting

| Fan series DC | Fan series AC |
|---|---|
| 4400 F | AC 4300 |
| 4400 FN | 9900 |
| 4300 | 4000 N |
| 4300 N | 4000 Z |
| 4400 | Subject to alternations |
| 4200 | |
| 4100 N | |

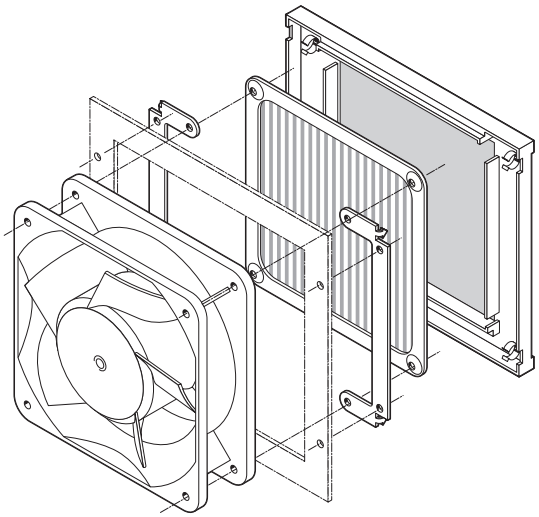

**LZ40N** — **Panel**

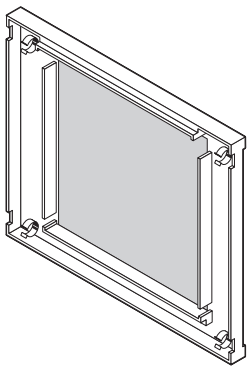

**LZ40-1** — **Mounting lug**

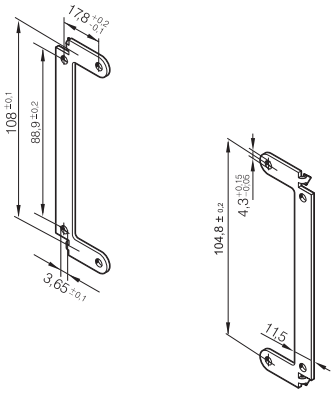


**LZ60** — **Coarse filter**

ebmpapst

# Fan filter guard grilles

- **Material:** Grille cover: polycarbonate (PC) with matt finish
  Mounting plate: wire mesh with black powder coating
  Filter pad: white, synthetically joined fibres
- **Note:**
  Filter safety grille suitable for fitting on axial fan ranges in the following dimensions: 60 mm, 80 mm, 92 mm, 119 mm, ø 172 mm. All filter units fit directly on the mounting holes on the fans.
  Filter safety grille consisting of 3 parts: outer grille cover, inner mounting plate and replaceable filter pad.
  The filter pad can be replaced quickly and easily via a quick release on the grille cover.
  The filter pads can be replaced even while the fan is running, as protection is provided by the welded wire mesh.

| Protection filter | Fan size | A | B | C | D | Replacement filter* |
|---|---|---|---|---|---|---|
| FF60 | 60 x 60 mm | 65 | 65 | 13,5 | 50,0 | RF 60 |
| FF80 | 80 x 80 mm | 85 | 85 | 14,0 | 71,5 | RF 80 |
| FF92 | 92 x 92 mm | 125 | 105 | 17,5 | 82,5 | RF 92 |
| FF119 | 119 x 119 mm | 162 | 136 | 18,5 | 104,5 | RF 119 |
| FF172 | ø 172 mm | 226 | 190 | 19,5 | 162,0 | RF 172 |

Subject to alternations

* Replacement filters only in packs of 5 pcs.

## FF60 / FF80

Fan size: 60 x 60 mm
80 x 80 mm

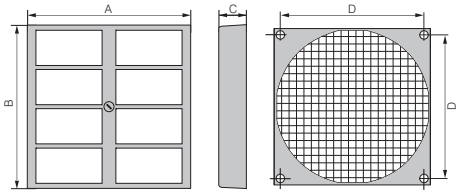


## FF92 / FF 119

Fan size: 92 x 92 mm
119 x 119 mm

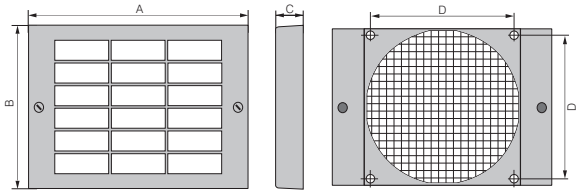


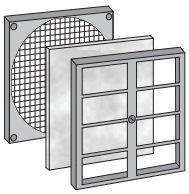

## FF 172

Fan size: Ø 172 mm

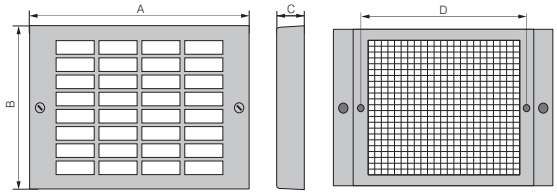


**Filter performance**

The filter safety grille filters filter 75% of dust particles with a size of 5-10 microns and can withstand temperatures of up to 100 °C. Filter class G3 in line with DIN EN 779.
Flame-retardant in line with DIN 53438, class F1. With a clean mounted filter, a reduction of air flow of 20-30% is possible.

# Inlet nozzles

## for centrifugal fans

– **Material:** Galvanised sheet steel

| Fan | | Vers. | k | m | o | q | $r_1$ | s | t | u | No.: |
|---|---|---|---|---|---|---|---|---|---|---|---|
| RET 97 | (S) | 1 | 116,0 | 80,0 | 10,0 | 0,80 | 10,0 | 108,0 | 3x4,5 | – | LZ 1000-097 |
| RER 120 | (P) | 1 | 146,0 | 94,4 | 18,0 | 0,80 | 16,0 | 134,0 | 4x4,5 | 126,0 | LZ 1000-120 |
| RER 133 | (P) | 1 | 129,0 | 87,0 | 13,0 | 1,00 | 8,0 | 118,0 | 4x4,5 | 103,0 | LZ 1000-133 |
| RER 160 | (S) | 1 | 142,0 | 100,0 | 9,0 | 1,00 | 8,0 | 132,0 | 4x4,5 | – | LZ 1000-160 |
| RER 175 / 190 | (P) | 1 | 170,0 | 125,5 | 14,0 | 1,25 | 10,0 | 158,0 | 4x4,5 | 146,0 | LZ 1000-175 |
| RER 220 | (P) | 2 | 252,0 | 155,0 | 21,0 | 0,80 | 22,0 | – | – | 199,0 | LZ 1000-220 |
| RER 225 | (P) | 1 | 223,0 | 146,0 | 28,0 | 1,50 | 25,0 | 210,0 | 4x4,5 | 196,0 | LZ 1000-225 |

(P) = plastic, (S) = sheet steel

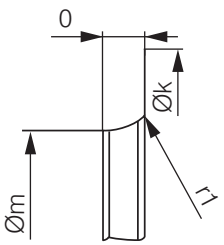


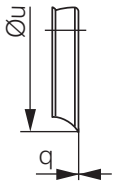


**Vers. 1**

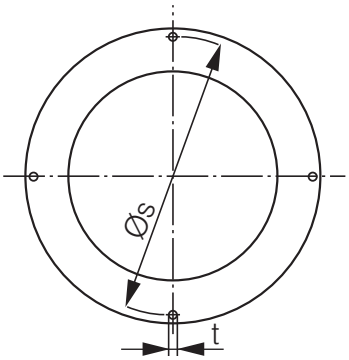


**Vers. 2**

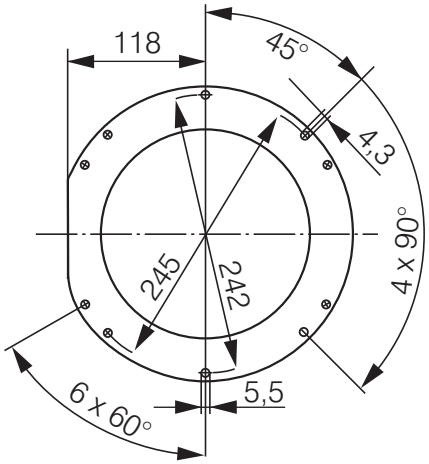




ebmpapst

# Inlet nozzles

## for centrifugal fans

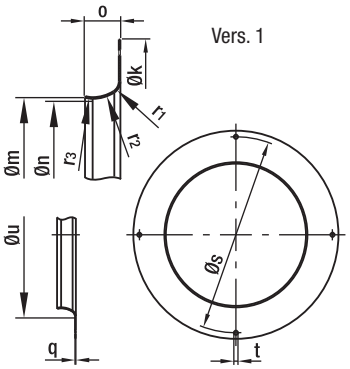


– **Material:** Galvanised sheet steel

**Inlet nozzles for backward curved centrifugal fans**

| Part no. | Size[1] | Vers. | k | m | n | o | q | $r_1$ | $r_2$ | $r_3$ | s | t | u |
|---|---|---|---|---|---|---|---|---|---|---|---|---|---|
| **96120-2-4013** | 120 (P) | 1 | 146,0 | 94,4 | — | 18,0 | 0,80 | 16,0 | — | — | 134,0 | 4x4,5 | 126,0 |

Subject to alternations (1) Size with key for impeller material: (P) = plastic, (S) = sheet steel, (A) = aluminium

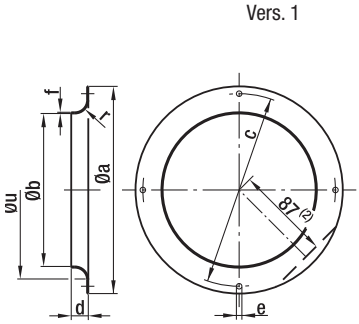


– **Material:** Galvanised sheet steel

**Inlet nozzles for forward curved centrifugal fans**

| Part no. | Size | Vers. | a | b | c | d | e | f | r | u |
|---|---|---|---|---|---|---|---|---|---|---|
| **09560-2-4013** | 085 (1) | 1 | 92,0 | 63,4 | 84,0 | 6,0 | 3x4,2 | 0,80 | 6,8 | — |
| **09563-2-4013** | 097 (1) | 1 | 116,0 | 80,0 | 108,0 | 10,0 | 3x4,5 | 0,80 | 10,0 | — |
| **09566-2-4013** | 108 | 1 | 129,0 | 87,0 | 118,0 | 13,0 | 4x4,5 | 1,00 | 8,0 | — |
| **09569-2-4013** | 120 | 1 | 142,0 | 100,0 | 132,0 | 9,0 | 4x4,5 | 1,00 | 8,0 | — |
| **09572-2-4013** | 133 | 1 | 150,0 | 112,0 | 142,0 | 12,0 | 4x4,5 | 1,00 | 10,0 | — |
| **09576-2-4013** | 140 / 146 | 1 | 170,0 | 125,5 | 158,0 | 14,0 | 4x4,5 | 1,25 | 10,0 | — |
| **09588-2-4013** | 160 | 1 (2) | 185,0 | 130,0 | 175,0 | 17,0 | 4x4,5 | 0,75 | 12,0 | — |

Subject to alternations (1) 3 drilled holes staggered by 120° (2) only for 09588-2-4013

# Inlet nozzles / Air filter

## for centrifugal fans

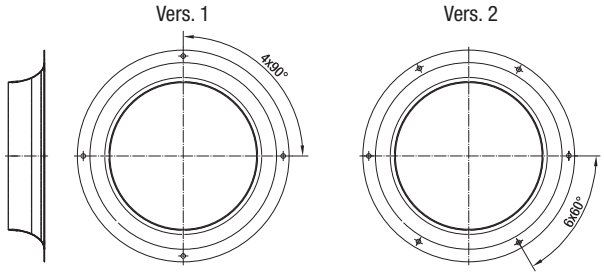


– **Material:** Galvanised sheet steel

**Inlet nozzles without measuring device for backward curved centrifugal fans**

| Part no. | Size | Vers. | Dimensions |
|---|---|---|---|
| **09576-2-4013** | 190 | 1 | see corresponding product page |
| **09609-2-4013** | 220 | 2 | see corresponding product page |
| **96358-2-4013** | 225 | 1 | see corresponding product page |
| **96359-2-4013** | 250 | 1 | see corresponding product page |
| **28000-2-4013** | 280 | 1 | see corresponding product page |
| **31000-2-4013** | 310 | 1 | see corresponding product page |

Subject to alternations

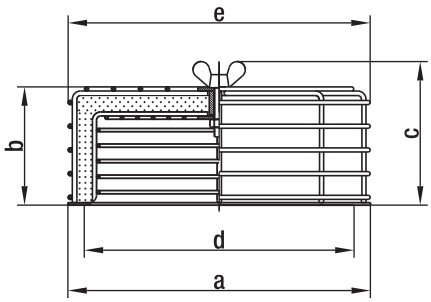


– **Material:** Steel wire / sheet steel plate, plastic coated in RAL no. 9005, black
– **Filter:** Viledon filter type R: PSB / 29 OS (according to DIN 24185)
Separation capacity: < 86 %
Efficiency: < 20 %
Dust binding capacity: 650 g/m2

**Air filters for centrifugal blowers** (with die-cast aluminium housing)

| Part no. | Size | a | b | c | d | e | Spare filter |
|---|---|---|---|---|---|---|---|
| **95777-1-5171** | 108 / 120 | 142,0 | 66,0 | 83,0 | 118-132 | 145,0 | 95779-1-5171 |
| **95778-1-5171** | 140 / 146 / 160 | 185,0 | 74,0 | 91,0 | 158-175 | 185,0 | 95780-1-5171 |

Subject to alternations

# Connection cables

- Connection cable with moulded plug connection in varying lengths.
- Wire end with core crimp sleeve, core-end sleeve or tin-plated.
- Straight or angled plug.
- For all fan types with pin 2.8 / 3.0 x 0.5.

| Plug model | L1 (mm) | Leads | Plug | Leads end | Lead colour | Receptacle for tabs | Application |
|---|---|---|---|---|---|---|---|
| LZ120 | 610 | 0,5 mm² | G | C | black/black | 2,8 x 0,5 | AC |
| LZ120-4 | 2 000 | 0,5 mm² | G | A | black/black | 2,8 x 0,5 | AC |
| LZ120-5 | 380 | 0,5 mm² | W | B | red/black | 2,8 x 0,5 | DC |
| LZ120-6 | 610 | 0,5 mm² | W | B | red/black | 2,8 x 0,5 | DC |
| LZ120-11 | 2 000 | 0,5 mm² | G | A | red/black | 2,8 x 0,5 | DC |
| LZ120-16 | 800 | 0,5 mm² | G | B | black/black | 2,8 x 0,5 | AC |
| LZ120-18 | 4 000 | 0,5 mm² | G | A | black/black | 2,8 x 0,5 | AC |
| LZ126 | 1 000 | 0,5 mm² | G | C | black/black | 2,8 x 0,5 | AC |
| LZ127 | 1 600 | 0,5 mm² | G | B | black/black | 2,8 x 0,5 | AC |
| LZ130-1 | 610 | 0,82 mm² | G | C | black/black | 2,8 x 0,5 | AC * |
| LZ140 | 610 | 0,73 mm² | G | B | black/black | 2,8 x 0,8 | AC |

* UL-approved

**Connection cable** **Straight plug (G)**

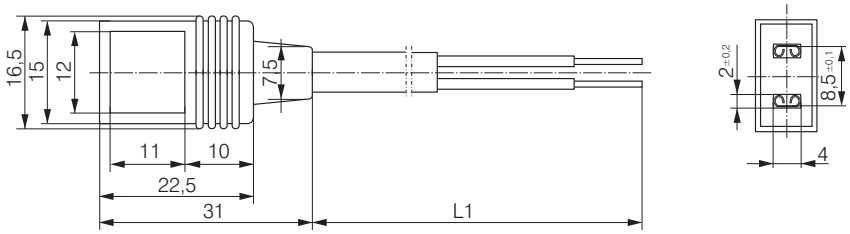


**Connection cable** **Angled plug (W)**

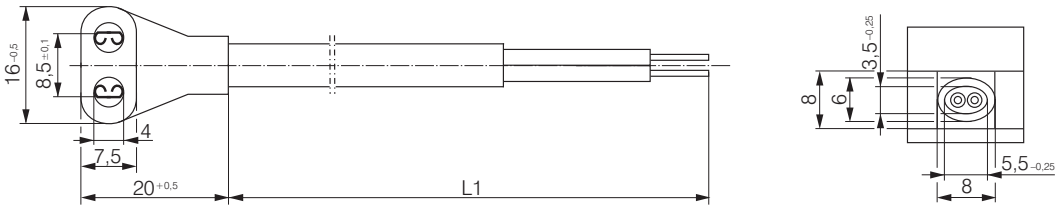


**Cor crimp sleeve** **Leads end A**

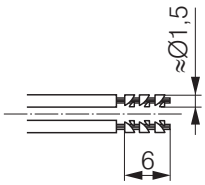


**Tin-plated** **Leads end B**

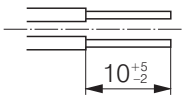


**Core end sleeve** **Leads end C**

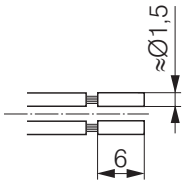

# Connection leads (ESM) / Handheld Programmer

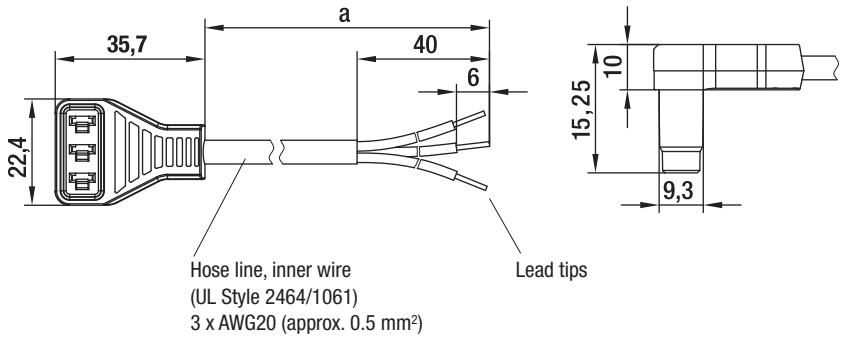


– **Design:** Cable conforms to UL standards, sealed plug.
Custom-built connection leads on request.

**Connection leads for energy-saving motors 115/230 VAC**

| Part no. | a |
|---|---|
| **13060-4-1040** | 450 |
| **13061-4-1040** | 1500 |

Subject to alternations

- **Easy speed programming**
- **Battery operated**
- **User-friendly navigation menu**
- **Protective boot with kickstand**

**For Energy Saving Motor (ESM) based products**

| Part no. |
|---|
| **CBC 000-AF08-01** |

Subject to alternations

Makes quick work of programming the two ESM selectable operating speeds. Eliminates the need for a personal computer, software, power adapter and 2nd cable. Good for production line or field service use. Automatic shut-off function for an extended battery life. Mini-USB connector for uploading software upgrades. Batteries, programming cable and operating manual included.

# Accessories

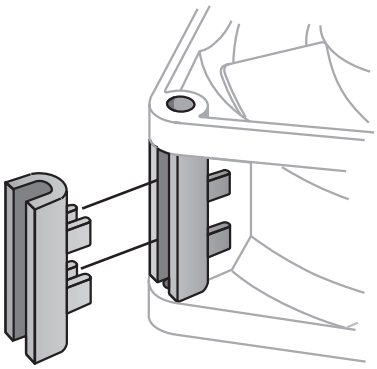

In addition to the accessories and assembly parts listed in this catalogue, ebm-papst also supplies numerous special parts for fans. The sales experts at ebm-papst will be happy to assist you in your enquiries concerning fan assembly and application.

| Fan series | Accessories |
|---|---|
| 8300 | LZ212 / LZ260 |
| 8400 N | LZ261 |
| 3300 | LZ212 / LZ260 |
| 3400 N | LZ261 |
| 9000 | LZ210 |
| 4000 | LZ210 |
| 4300 | LZ212 / LZ260 |
| 8300 | LZ212 |

| Fan series | Accessories |
|---|---|
| 5100 | LZ210 |
| 5600 | LZ210 |
| 5200 | LZ210 |
| 5900 | LZ210 |
| 7000 | LZ210 |
| VARIOFAN | LZ370 |

## LZ212

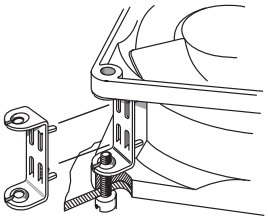

Screw clip of stainless steel.
For mounting fans with threaded pin 3.5 DIN EN ISO 1478 (7970).

## LZ260 / LZ261

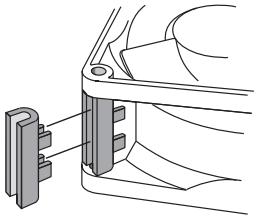

Spacer of fibreglass reinforced plastic. For screw mounting over both fan mounting flanges.

## LZ210

Screw clip of hardened steel. For mounting fans with threaded pin 6-32 UNC and/or 3.5 DIN 7970.

## LZ370

Required performance data:

| | |
|---|---|
| $R_{25}$ | = 100 KΩ ±5% @25°C |
| B-value | = 4190 ±2% |
| $P_{max}$ | = 0,25 W |

Temperature sensor for speed-controlled fan operation. Temperature range 30...50 °C.

## LZ550

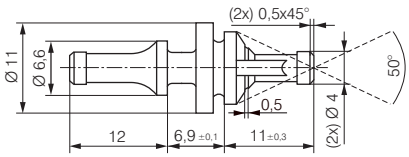


Rubber anti-vibration mounts
for fans with a hole ø of 4.3 ±0.2 mm and flange thickness of 3 - 5.5 mm.
For a carrier plate with a hole ø of 6.5 ±0.15 mm and plate thickness of 1 - 2 mm.

# Electrical connections EC E)

**Technical features** (Nominal voltage 24 / 48 VDC)**:**

- Control input 0-10 VDC / PWM
- Tach output
- Reverse polarity and locked-rotor protection
- Motor current limitation
- Voltage-dependent derating
- Over-temperature protected electronics / motor
- Soft start

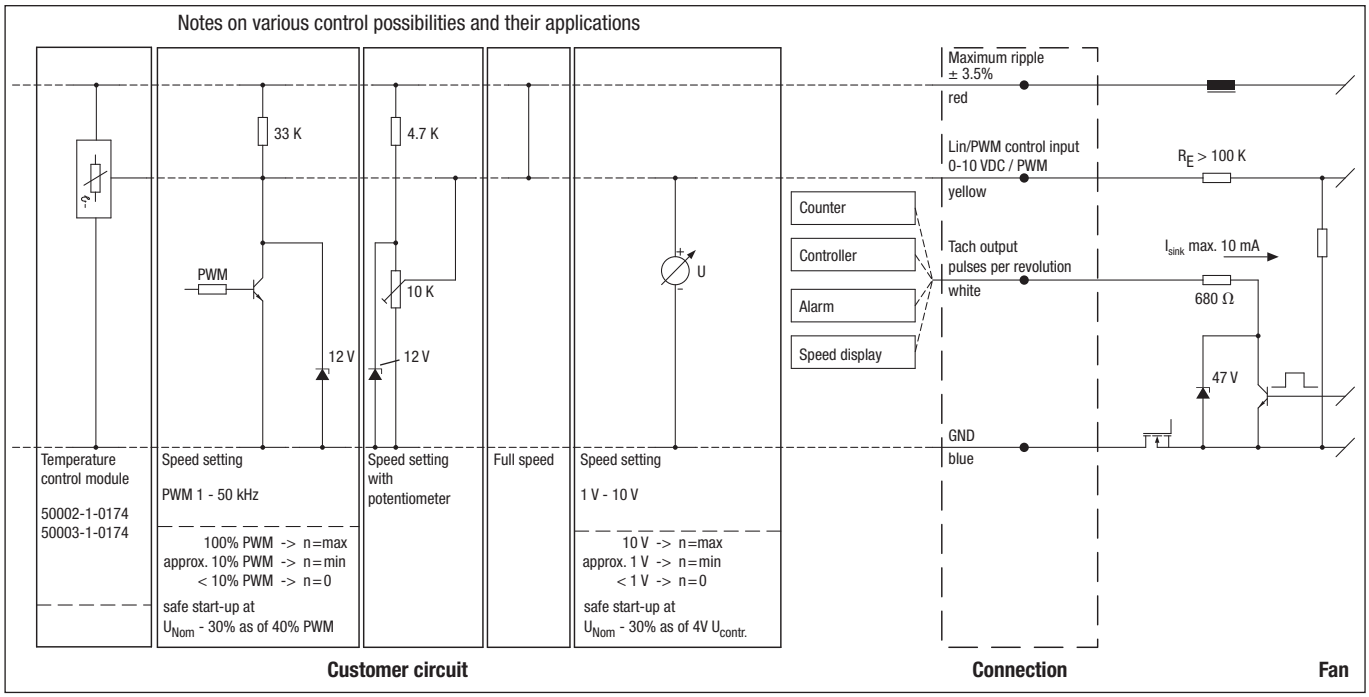


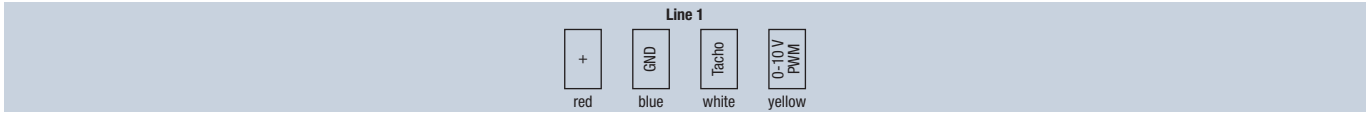


| Line | Connection | Colour | Assignment / function |
|---|---|---|---|
| 1 | + | red | Maximum ripple ± 3.5 % |
| | GND | blue | GND |

| Line | Connection | Colour | Assignment / function |
|---|---|---|---|
| 1 | Tacho | white | Tach output |
| | 0-10 V / PWM | yellow | Control input |

# Electrical connections EC G)

**Technical features** (Nominal voltage 24 / 48 VDC)**:**

- Control input 0-10 VDC / PWM
- Tach output
- Reverse polarity and locked-rotor protection

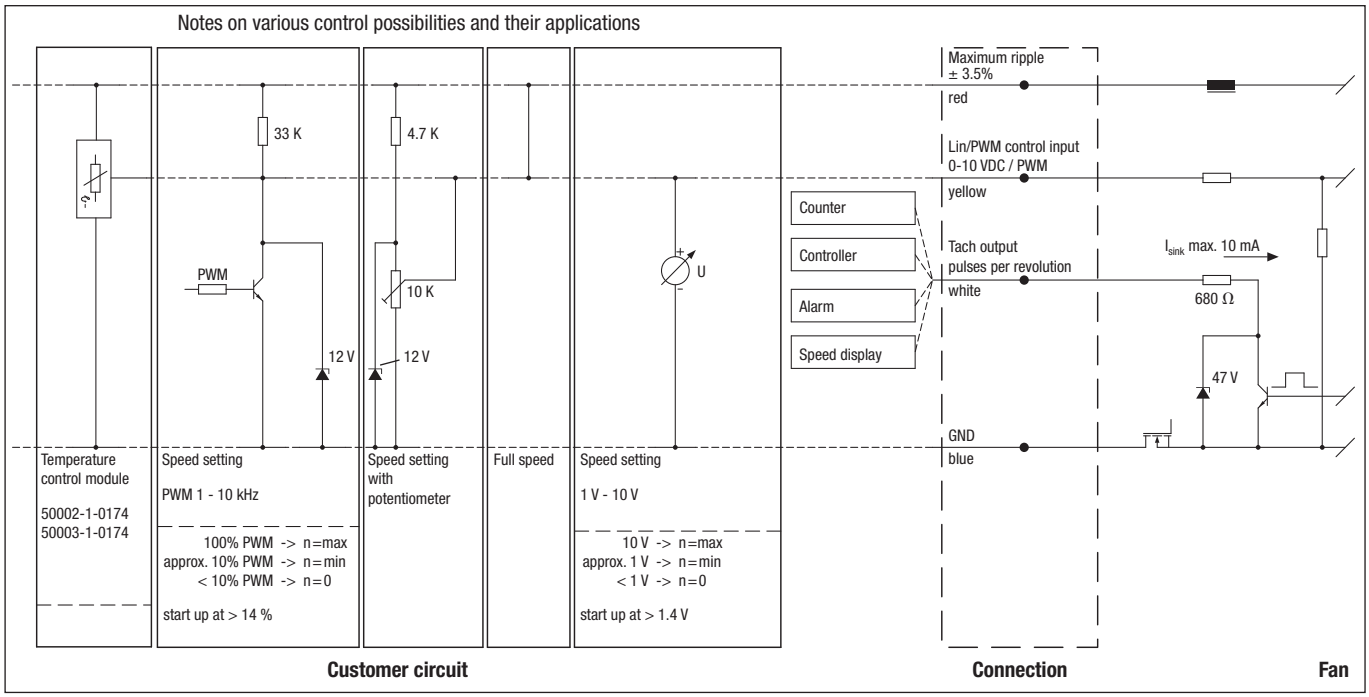


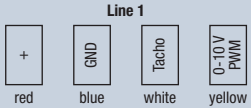


| Line | Connection | Colour | Assignment / function |
|---|---|---|---|
| 1 | + | red | Maximum ripple ± 3.5 % |
| | GND | blue | GND |

| Line | Connection | Colour | Assignment / function |
|---|---|---|---|
| 1 | Tacho | white | Tach output: |
| | | | 2 pulses / revolution (M1G045/M1G055) |
| | | | 3 pulses / revolution (M1G074/M1G084) |
| | 0-10 V / PWM | yellow | Control input (Impedance 100 kΩ) |

# Electrical connections EC H3)

**Technical features** (M3G 045 / M3G 055 with 2 Speed stages)**:**

- Speed adjustment input (230V)
- Over-temperature protected electronics / motor
- Motor current limitation
- Locked-rotor protection
- Soft start

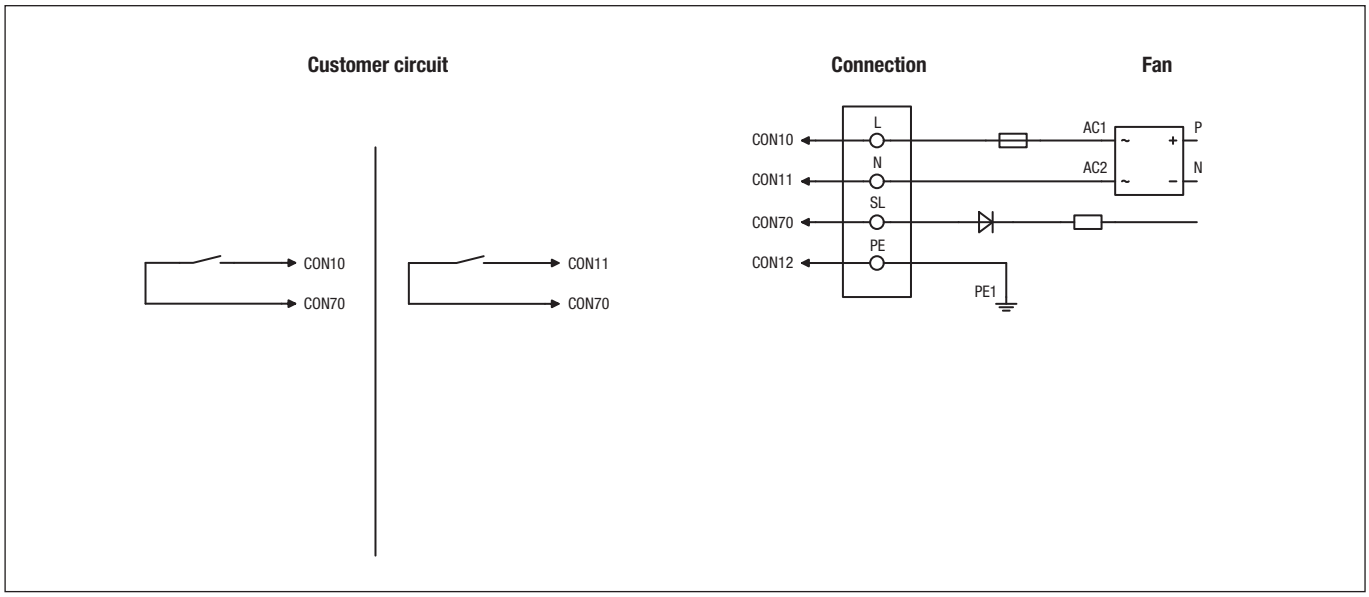


| Line | Connection | Colour | Assignment / function |
|---|---|---|---|
| CON10 | L | black | Power supply 230 VAC, 50 - 60 Hz, see type plate for voltage range |
| CON11 | N | blue | Neutral conductor |
| CON12 | PE | green/yellow | Protective earth |
| CON70 | SL | brown | Speed selection: switch open = speed 1; switch closed = speed 2 |

# Electrical connections EC H4)

**Technical features** (M3G 055 Speed-controlled)**:**

- Output 10 VDC max. 1,1 mA
- Tach output
- Over-temperature protected electronics / motor
- Motor current limitation
- Soft start
- Locked-rotor protection
- Control input 0-10 VDC / PWM
- Control interface with SELV potential safely disconnected from the mains

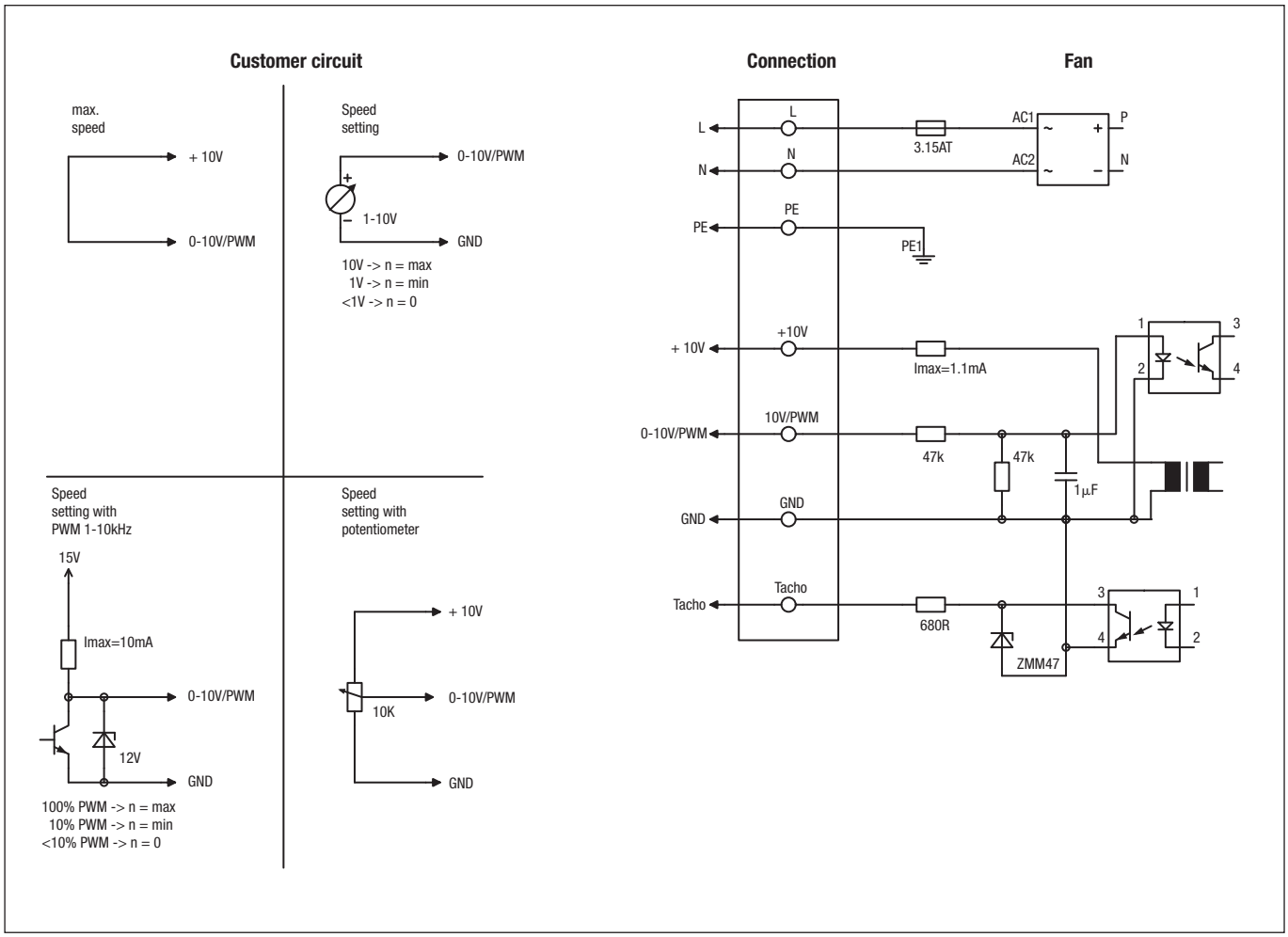


| Connection | Colour | Assignment / function |
|---|---|---|
| L | black | Power supply 230 VAC, 50 - 60 Hz, see type plate for voltage range |
| N | blue | Neutral conductor |
| PE | green/yellow | Protective earth |
| +10V/max.1.1mA | red | Voltage output +10 V / 1.1 mA, electrically isolated, not short-circuit-proof |
| Tacho | white | Tach output: Open Collector, 1 pulse per revolution, electrically isolated |
| 0-10V PWM | yellow | Control input 0 - 10 V or PWM, electrically isolated |
| GND | blue | GND - Connection for control interface |

# Electrical connections EC J5)

**Technical features** (Nominal voltage 24 / 48 VDC)**:**

- Control input 0-10 VDC / PWM
- Tach output
- Reverse polarity and locked-rotor protection
- Motor current limitation
- Line undervoltage detection
- Soft start

Notes on various control possibilities and their applications

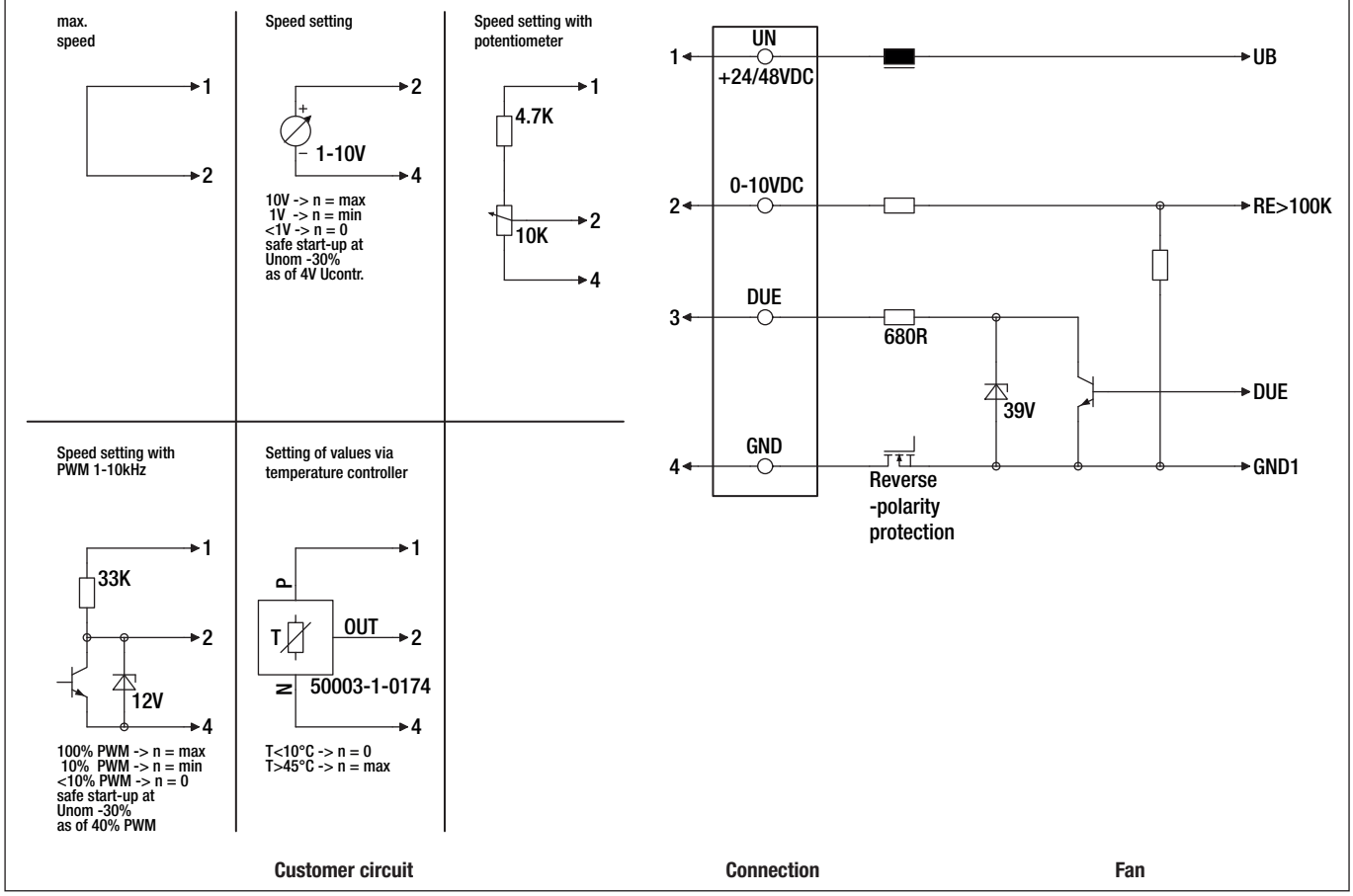


| Line | Connection | Colour | Assignment / function |
|---|---|---|---|
| 1 | UN +24/48 VDC | red | Power supply 24/48 VDC, Maximum ripple ± 3,5 % |
| 2 | 0-10 VDC | yellow | Control input Re >100 K |
| 3 | Tach | white | Speed monitoring output, 3 pulses / revolution, Isink max. = 10 mA |
| 4 | GND | blue | Reference ground |

# Electrical connections AC A1) / C2 / J7)

**A1) Single-phase capacitor motor** (1~ 115/230 VAC power line)
with TOP wired internally

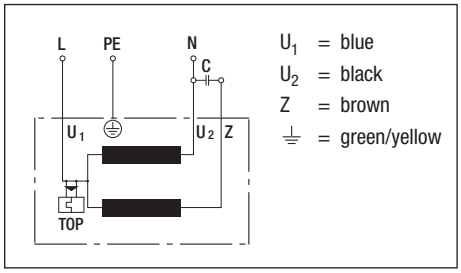


**C2) Star connection** (3~ 400 VAC power line)
without TOP

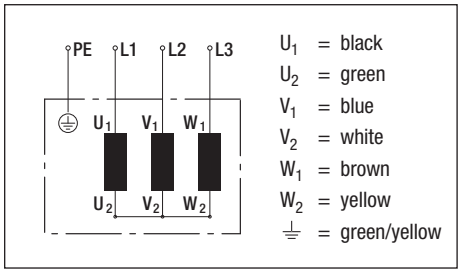


**J7) Energy-saving motor (ESM)** (1~ 115/230 VAC power line)

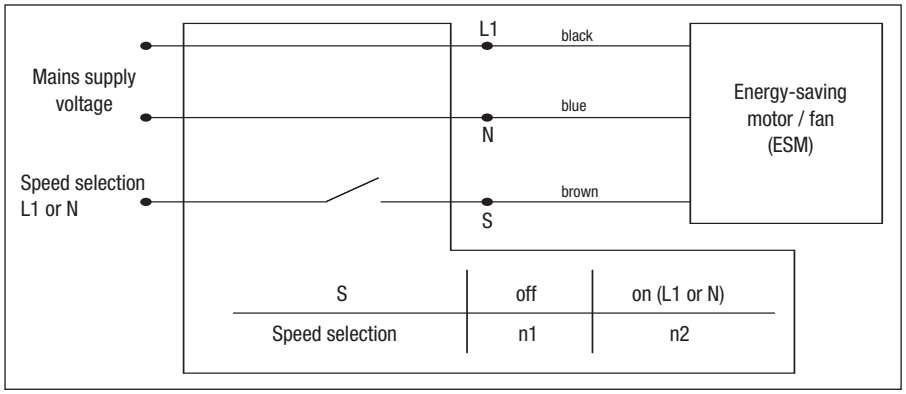

# ebm-papst in Germany

**ebm-papst Mulfingen GmbH & Co. KG**
Bachmühle 2
74673 Mulfingen
GERMANY
Phone +49 7938 81-0
Fax +49 7938 81-110
info1@de.ebmpapst.com

**ebm-papst St. Georgen GmbH & Co. KG**
Hermann-Papst-Straße 1
78112 St. Georgen
GERMANY
Phone +49 7724 81-0
Fax +49 7724 81-1309
info2@de.ebmpapst.com

**ebm-papst Landshut GmbH**
Hofmark-Aich-Straße 25
84030 Landshut
GERMANY
Phone +49 871 707-0
Fax +49 871 707-465
info3@de.ebmpapst.com

**Berlin**
Dipl.-Ing. (TH) Jens Duchow
Händelstraße 7
16341 Panketal
GERMANY
Phone +49 30 944149-62
Fax +49 30 944149-63
Jens.Duchow@de.ebmpapst.com

**Bielefeld**
Dipl.-Ing. (FH) Wolf-Jürgen Weber
Niehausweg 13
33739 Bielefeld
GERMANY
Phone +49 5206 91732-31
Fax +49 5206 91732-35
Wolf-Juergen.Weber@de.ebmpapst.com

**Dortmund**
Dipl.-Ing. (FH) Hans-Joachim Pundt
Auf den Steinern 3
59519 Möhnesee-Völlinghausen
GERMANY
Phone +49 2925 800-407
Fax +49 2925 800-408
Hans-Joachim.Pundt@de.ebmpapst.com

**Frankfurt**
Dipl.-Ing. Christian Kleffmann
Dr.-Hermann-Krause-Straße 23
63452 Hanau
GERMANY
Phone +49 6181 1898-12
Fax +49 6181 1898-13
Christian.Kleffmann@de.ebmpapst.com

**Halle**
Dipl.-Ing. (TU) Michael Hanning
Lercheneck 4
06198 Salzatal / OT Lieskau
GERMANY
Phone +49 345 55124-56
Fax +49 345 55124-57
Michael.Hanning@de.ebmpapst.com

**Hamburg**
Breuell & Hilgenfeldt GmbH
Ing. Dirk Kahl
Elektroingenieur
Grützmühlenweg 48
22339 Hamburg
GERMANY
Phone +49 40 538092-19
Fax +49 40 538092-84
Dirk.Kahl@de.ebmpapst.com

**Heilbronn / Heidelberg**
Dipl.-Ing. Mark Gartner
Gehrweg 12
74199 Unterheinriet
GERMANY
Phone +49 7130 404569-1
Fax +49 7130 404569-2
Mark.Gartner@de.ebmpapst.com

**Kassel**
Dipl.-Ing. (FH) Ralph Brück
Hoherainstraße 38
35075 Gladenbach
GERMANY
Phone +49 6462 4071-10
Fax +49 6462 4071-11
Ralph.Brueck@de.ebmpapst.com

**Koblenz**
Winfried Schaefer
Hinter der Kirch 10
56767 Uersfeld
GERMANY
Phone +49 2657 16-96
Fax +49 2657 16-76
Winfried.Schaefer@de.ebmpapst.com

**Munich**
Dipl.-Wirt.-Ing. (FH) Jens Peter
Uhlandstraße 6
74427 Fichtenberg
GERMANY
Phone +49 7971 260-180
Fax +49 7971 260-221
Jens.Peter@de.ebmpapst.com

**Nuremberg**
Dipl.-Wirt.-Ing. (FH) Axel Resch
Dr.-August-Koch-Str. 1
91639 Wolframs-Eschenbach
GERMANY
Phone +49 9875 9783-170
Fax +49 9875 9783-171
Axel.Resch@de.ebmpapst.com

**Offenburg**
Dipl.-Ing. (FH) Ralf Braun
Hubeneck 21
77704 Oberkirch
GERMANY
Phone +49 7802 9822-52
Fax +49 7802 9822-53
Ralf.Braun@de.ebmpapst.com

**Stuttgart**
Dipl.-Ing. (FH) Rudi Weinmann
Hindenburgstraße 100/1
73207 Plochingen
GERMANY
Phone +49 7153 9289-80
Fax +49 7153 9289-81
Rudi.Weinmann@de.ebmpapst.com

**Ulm**
M.Sc. Reinhard Sommerreißer
Am Silbermannpark 10
86161 Augsburg
GERMANY
Phone +49 821 6610-7023
Fax +49 821 6610-7024
Reinhard.Sommerreisser@de.ebmpapst.com

## Distributors

**Burgdorf**
ETB Electronic Team
Beratungs- u. Vertriebs GmbH
Wundramweg 1
31303 Burgdorf
GERMANY
Phone +49 5136 97229-30
Fax +49 5136 97229-39
info@etb-electronic.de
www.etb-electronic.de

**Frankfurt**
R.E.D. Handelsgesellschaft mbH
Gutenbergstraße 3
63110 Rodgau - Jügesheim
GERMANY
Phone +49 6106 841-0
Fax +49 6106 841-111
info@red-elektromechanik.de
www.red-elektromechanik.de

**Frankfurt / Neu-Isenburg**
Arrow Central Europe GmbH
Frankfurter Straße 211
63263 Neu-Isenburg
GERMANY
Telefon: +49(0)6102/5030-0
Telefax: +49(0)6102/5030-8455
E-Mail: info@arrowce.com

**Hamburg**
Breuell + Hilgenfeldt GmbH
Grützmühlenweg 48
22339 Hamburg
GERMANY
Phone +49 40 538092-20
Fax +49 40 538092-84
info@breuell-hilgenfeldt.de

Walter Kluxen GmbH
Neuer Höltigbaum 6
20097 Hamburg
GERMANY
Phone +49 40 237010
Fax +49 40 23701309

# ebm-papst in Europe

**Klausdorf**
ETB Electronic Team
Beratungs- u. Vertriebs GmbH
Zossener Straße 27
15838 Klausdorf
GERMANY
Phone +49 33703 69-0
Fax +49 33703 69-149
info@etb-electronic.de
www.etb-electronic.de

**Munich**
A. Schweiger GmbH
Ohmstraße 1
82054 Sauerlach
GERMANY
Phone +49 8104 897-0
Fax +49 8104 897-90
info@schweiger-gmbh.de
www.schweiger-gmbh.com

Multi-Bauelemente-Service
Vertrieb von elektr. Bauelementen GmbH
Römerstraße 8
85661 Forstinning
GERMANY
Phone +49 8121 2506-0
Fax +49 8121 2506-200
multi.bauelemente@mbs.to

● *Express* **Service-Center** (1 to 5 pieces)

**North**
Breuell + Hilgenfeldt GmbH
Grützmühlenweg 48
22339 Hamburg
GERMANY
Phone +49 40 538092-20
Fax +49 40 538092-84
ebmpapst@breuell-hilgenfeldt.de

**South**
Scheffel
elektrotechnischer Vertrieb GmbH
Aischbach 1
70839 Gerlingen
GERMANY
Phone +49 7156 28357
Fax +49 7156 49425
info@ebmpapst-service.de

## Europe

**Austria**
ebm-papst Motoren & Ventilatoren GmbH
Straubingstraße 17
4030 Linz
AUSTRIA
Phone +43 732 321150-0
Fax +43 732 321150-20
info@at.ebmpapst.com
www.ebmpapst.at

Avnet Abacus Vienna
Schönbrunner Str. 297-307
1120 Vienna
AUSTRIA
Phone +43 1 86642-0
Fax +43 1 86642-250
wien@avnet-abacus.eu
www.avnet-abacus.eu

Compex Ges.m.b.H
Wurlitzergasse 10/3
1160 Wien
AUSTRIA
Phone +43 1 4804223
Fax +43 1 4864230
compex.wien@utanet.at

**Belarus**
ebm-papst Bel AgmbH
Lipkovskaya Gasse 34
Office No. 6, Room 106, 107
223010 Minsk
BELARUS
Phone +375 17 3851556
Fax +375 17 3851556
info@by.ebmpapst.com
www.ebmpapst.by

**Belgium**
ebm-papst Benelux B.V.
Sales office Belgium-Luxemburg
Romeinsestraat 6/0101
Research Park Haasrode
3001 Heverlee-Leuven
BELGIUM
Phone +32 16 396-200
Fax +32 16 396-220
info@be.ebmpapst.com
www.ebmpapst.be

Avnet Abacus Diegem
Eagle Building
Kouterveldstraat 20
1831 Diegem
BELGIUM
Phone +32 2 7099 167
Fax +32 2 7099 801
diegem@avnet-abacus.eu
www.avnet-abacus.eu

**Bulgaria**
ebm-papst Romania S.R.L.
Str. Tarnavei No. 20
500327 Brasov
ROMANIA
Phone +40 268 331859
Fax +40 268 312805
dudasludovic@xnet.ro

Compex Ges.m.b.H
Wurlitzergasse 10/3
1160 Wien
AUSTRIA
Phone +43 1 4804223
Fax +43 1 4864230
compex.wien@utanet.at

**Croatia**
ebm-papst Industries Kft.
Ezred u. 2.
1044 Budapest
HUNGARY
Phone +36 1 8722-190
Fax +36 1 8722-194
office@hu.ebmpapst.com

Compex Ges.m.b.H
Wurlitzergasse 10/3
1160 Wien
AUSTRIA
Phone +43 1 4804223
Fax +43 1 4864230
compex.wien@utanet.at

**Czech Republic / Slovakia**
ebm-papst CZ s.r.o.
Kaštanová 34a
620 00 Brno
CZECH REPUBLIC
Phone +420 544 502-411
Fax +420 547 232-622
info@ebmpapst.cz
www.ebmpapst.cz

**Denmark**
ebm-papst Denmark ApS
Vallensbækvej 21
2605 Brøndby
DENMARK
Phone +45 43 631111
Fax +45 43 630505
mail@dk.ebmpapst.com
www.ebmpapst.dk

**Estonia**
ebm-papst Oy, Eesti Filiaal
Kesk tee 13
Aaviku küla, Jüri Tehnopark
75301 Rae Vald, Harjumaa
ESTONIA
Phone +372 65569-78
Fax +372 65569-79
www.ebmpapst.ee

# ebm-papst in Europe

**Finland**
ebm-papst Oy
Puistotie 1
02760 Espoo
FINLAND
Phone +358 9 887022-0
Fax +358 9 887022-13
mailbox@ebmpapst.fi
www.ebmpapst.fi

**France**
ebm-papst sarl
ZI Nord - rue A. Mohler
BP 62
67212 Obernai Cedex
FRANCE
Phone +33 820 326266
Fax +33 3 88673883
info@ebmpapst.fr
www.ebmpapst.fr

**Greece**
Helcoma
Th. Rotas & Co OE
Davaki 65
17672 Kallithea-Attiki
GREECE
Phone +30 210 9513-705
Fax +30 210 9513-490
contact@helcoma.gr
www.helcoma.gr

Assimacopoulos S.A.
11, Karitsi Square
10561 Athen
GREECE
Phone +30 10 322 1737
Fax +30 10 322 5708
assimac@interagora.gr
www.assimacopoulos.gr

**Hungary**
ebm-papst Industries Kft.
Ezred u. 2.
1044 Budapest
HUNGARY
Phone +36 1 8722-190
Fax +36 1 8722-194
office@hu.ebmpapst.com

**Iceland**
RJ Engineers
Stangarhyl 1a
110 Reykjavik
ICELAND
Phone +354 567 8030
Fax +354 567 8015
rj@rj.is
www.rj.is

**Ireland**
ebm-papst UK Ltd.
Chelmsford Business Park
Chelmsford Essex CM2 5EZ
UNITED KINGDOM
Phone +44 1245 468555
Fax +44 1245 466336
sales@uk.ebmpapst.com
www.ebmpapst.co.uk

**Italy**
ebm-papst Srl
Via Cornaggia 108
22076 Mozzate (Co)
ITALY
Phone +39 0331 836201
Fax +39 0331 821510
info@it.ebmpapst.com
www.ebmpapst.it

**Macedonia**
ebm-papst Industries Kft.
Ezred u. 2.
1044 Budapest
HUNGARY
Phone +36 1 8722-190
Fax +36 1 8722-194
office@hu.ebmpapst.com

**Netherlands**
ebm-papst Benelux B.V.
Engelseweg 127
5705 AC Helmond
NETHERLANDS
Phone +31 492 502-900
Fax +31 492 502-950
verkoop@nl.ebmpapst.com
www.ebmpapst.nl

Avnet Abacus Netherlands
Takkebijsters 2
4817 BL Breda
NETHERLANDS
Phone +31 765 722 300
Fax +31 765 722 303
breda@avnet-abacus.eu
www.avnet-abacus.eu

**Norway**
ebm-papst AS
Nordåsveien 5
1251 Oslo
NORWAY
Phone +47 22 763340
Fax +47 22 619173
mailbox@ebmpapst.no
www.ebmpapst.no

**Poland**
ebm-papst Polska Sp. z o.o.
ul. Annopol 4A
03236 Warszawa
POLAND
Phone +48 22 6757819
Fax +48 22 6769587
office@ebmpapst.pl
www.ebmpapst.pl

Compex Ges.m.b.H
Wurlitzergasse 10/3
1160 Wien
AUSTRIA
Phone +43 1 4804223
Fax +43 1 4864230
compex.wien@utanet.at

**Portugal**
ebm-papst (Portugal), Lda.
Centro Empresarial de Alverca
Rua de Adarse, Vale D'Ervas
Corpo D / Fracção 3
2615-178 Alverca do Ribatejo
PORTUGAL
Phone +351 218 394 880
Fax +351 218 394 759
info@pt.ebmpapst.com
www.ebmpapst.pt

**Romania**
ebm-papst Romania S.R.L.
Str. Tarnavei Nr. 20
500327 Brasov
ROMANIA
Phone +40 268 331859
Fax +40 268 312805
dudasludovic@xnet.ro

Compex Ges.m.b.H
Wurlitzergasse 10/3
1160 Wien
AUSTRIA
Phone +43 1 4804223
Fax +43 1 4864230
compex.wien@utanet.at

**Russia**
ebm-papst Ural GmbH
Posadskaja-Strasse, 23(E), 3
620102 Ekaterinburg
RUSSIA
Phone +7 343 2338000
Fax +7 343 2337788
Konstantin.Molokov@ru.ebmpapst.com
www.ebmpapst.ur.ru

ebm-papst Rus GmbH
proezd 4529, vladenie 5, stroenie 1
141000 Mytistschi, Oblast Moskau
RUSSIA
Phone +7 495 9807524
Fax +7 495 5140924
info@ebmpapst.ru
www.ebmpapst.ru

# ebm-papst in Europe and America

**Serba & Montenegro**
ebm-papst Industries Kft.
Ezred u. 2.
1044 Budapest
HUNGARY
Phone +36 1 8722-190
Fax +36 1 8722-194
office@hu.ebmpapst.com

**Spain**
ebm-papst Ibérica S.L.
Avda. del Sistema Solar, 29
28830 San Fernando de Henares (Madrid)
SPAIN
Phone +34 91 6780894
Fax +34 91 6781530
ventas@ebmpapst.es
www.ebmpapst.es

**Sweden**
ebm-papst AB
Äggelundavägen 2
17562 Järfälla
SWEDEN
Phone +46 10 4544400
Fax +46 8 362306
info@ebmpapst.se
www.ebmpapst.se

**Switzerland**
ebm-papst AG
Rütisbergstrasse 1
8156 Oberhasli
SWITZERLAND
Phone +41 44 73220-70
Fax +41 44 73220-77
verkauf@ebmpapst.ch
www.ebmpapst.ch

Omni Ray AG
Im Schörli 5
8600 Dübendorf
SWITZERLAND
Phone +41 44 802 2880
Fax +41 44 802 2828
r.borner@omniray.ch
www.omniray.ch

**Turkey**
Akantel Elektronik San. Tic. LTD. Sti.
Atatürk Organize Sanayi
Bölgesi 10007 SK. No.:6
35620 Cigli-Izmir
TURKEY
Phone +90 232 3282090
Fax +90 232 3280270
akantel@akantel.com.tr
www.ebmpapst.com.tr

**Ukraine**
ebm-papst Ukraine LLC
Lepse Boulevard, 4, Building 21
03067 Kiev
UKRAINE
Phone +38 044 2063091
Fax +38 044 2063091
mail@ebmpapst.ua
www.ebmpapst.ua

**United Kingdom**
ebm-papst UK Ltd.
Chelmsford Business Park
Chelmsford Essex CM2 5EZ
UNITED KINGDOM
Phone +44 1245 468555
Fax +44 1245 466336
sales@uk.ebmpapst.com
www.ebmpapst.co.uk

ebm-papst Automotive & Drives (UK) Ltd.
The Smithy
Fidlers Lane
East Ilsley, Berkshire RG20 7LG
UNITED KINGDOM
Phone +44 1635 2811-11
Fax +44 1635 2811-61
A&Dsales@uk.ebmpapst.com
www.ebmpapst-ad.com

## America

**Argentina**
ebm-papst de Argentina S.A.
Hernandarias 148 Lomas del Mirador
Pcia. de Buenos Aires (1752)
ARGENTINA
Phone +54 11 46576135
Fax +54 11 46572092
ventas@ar.ebmpapst.com
www.ebmpapst.com.ar

**Brasil**
ebm-papst Motores Ventiladores Ltda.
Av. José Giorgi, 301 Galpões B6+B7
Condominio Logical Center
06707-100 Cotia - São Paulo
BRAZIL
Phone +55 11 4613-8700
Fax +55 11 4777-1456
vendas@br.ebmpapst.com
www.ebmpapst.com.br

**Canada**
ebm-papst Canada Inc.
1800 Ironstone Manor, Unit 2
Pickering, Ontario, L1W3J9
CANADA
Phone +1 905 420-3533
Fax +1 905 420-3772
sales@ca.ebmpapst.com
www.ebmpapst.ca

**Mexico**
ebm Industrial S. de R.L. de C.V.
Paseo de Tamarindos 400-A-5to Piso
Col. Bosques de las Lomas
Mexico 05120, D.F.
MEXICO
Phone +52 55 3300-5144
Fax +52 55 3300-5243
sales@mx.ebmpapst.com
www.ebmpapst.com.mx

**USA**
ebm-papst Inc.
P.O. Box 4009
100 Hyde Road
Farmington, CT 06034
UNITED STATES
Phone +1 860 674-1515
Fax +1 860 674-8536
sales@us.ebmpapst.com
www.ebmpapst.us

ebm-papst Automotive & Drives, Inc.
3200 Greenfield, Suite 255
Dearborn, MI 48120
UNITED STATES
Phone +1 313 406-8080
Fax +1 313 406-8081
automotive@us.ebmpapst.com
www.ebmpapst-automotive.us

# ebm-papst in Africa, Asia and Australia

## Africa

**South Africa**
ebm-papst South Africa (Pty) Ltd.
P.O. Box 3124
1119 Yacht Avenue
2040 Honeydew
SOUTH AFRICA
Phone +27 11 794-3434
Fax +27 11 794-5020
info@za.ebmpapst.com
www.ebmpapst.co.za

## Asia

**China**
ebm-papst Ventilator (Shanghai) Co., Ltd.
No. 418, Hua Jing Road
Wai Gao Qiao Free Trade Zone
No. 2001, Yang Gao (N) Road
200131 Shanghai
P.R. of CHINA
Phone +86 21 5046-0183
Fax +86 21 5046-1119
sales@cn.ebmpapst.com
www.ebmpapst.com.cn

**Hong Kong**
ebm-papst Hong Kong Ltd.
Room 17E, MG Tower
133 Hoi Bun Road, Kwun Tong
Hong Kong
P.R. of CHINA
Phone +852 2145-8678
Fax +852 2145-7678
info@hk.ebmpapst.com

**India**
ebm-papst India Pvt. Ltd.
26/3, G.N.T. Road, Erukkencherry
Chennai-600118
INDIA
Phone +91 44 25372556
Fax +91 44 25371149
sales@in.ebmpapst.com
www.ebmpapst.in

**Indonesia**
ebm-papst Indonesia
Representative Office
German Centre, 4th Floor, Suite 4470
Jl. Kapt. Subijono Dj. Bumi Serpong Damai
15321 Tangerang
INDONESIA
Phone +62 21 5376250
Fax +62 21 5388305
salesdept@id.ebmpapst.com

**Israel**
Polak Bros. Import Agencies Ltd.
9 Hamefalsim Street
Kiryat Arie, Petach-Tikva 49514
ISRAEL
Phone +972 3 9100300
Fax +972 3 5796679
polak@polak.co.il
www.polak.co.il

**Japan**
ebm-papst Industries Japan K.K.
12th Floor, Benex S-3 Bldg.
3-20-8 Shinyokohama, Kohoku-ku
222-0033 Yokohama
JAPAN
Phone +81 45 47057-51
Fax +81 45 47057-52
info@jp.ebmpapst.com
www.ebmpapst.jp

**Korea**
ebm-papst Korea Co. Ltd.
6F, Trutec Bldg.
B 6-2, Digital Media City (DMC)
Sangam-Dong, Mapu-Gu
Seoul 121-270
KOREA
Phone +82 2 366213-24
Fax +82 2 366213-26
info@kr.ebmpapst.com
www.ebmpapst.co.kr

**Malaysia**
ebm-papst Malaysia
Representative Office
Unit 12-2, Jalan USJ Sentral 3
Persiaran Subang, Selangor Darul Ehsan
47600 Subang Jaya
MALAYSIA
Phone +60 3 8024-1680
Fax +60 3 8024-8718
salesdept@my.ebmpapst.com

**Singapore**
ebm-papst SEA Pte. Ltd.
No. 23 Ubi Road 4
#06-00 Olympia Industrial Building
Singapore 408620
SINGAPORE
Phone +65 65513789
Fax +65 68428439
salesdept@sg.ebmpapst.com

**Taiwan**
ETECO Engineering & Trading Corp.
6F-4, No. 93, Ta-sun 1 St. Road
Tsow-Inn District, Kaohsiung
TAIWAN
Phone +886 7 557-4268
Fax +886 7 557-2788
eteco@ms22.hinet.net
www.ebmpapst.com.tw

**Thailand**
ebm-papst Thailand Co., Ltd.
99/9 Moo 2, Central Chaengwattana Tower
14th Floor, Room 1402
Chaengwattana Road Bangtarad, Pakkret
11120 Nonthaburi
THAILAND
Phone +66 2 8353785-7
Fax +66 2 8353788
salesdept@th.ebmpapst.com

**United Arab Emirates**
ebm-papst Middle East FZE
PO Box 17755
Jebel Ali Free Zone / FZS1 / AP05
Dubai
UNITED ARAB EMIRATES
Phone +971 4 88608-26
Fax +971 4 88608-27
info@ae.ebmpapst.com
www.ebmpapst.ae

**Vietnam**
ebm-papst Vietnam
Representative Office
Room #102, 25 Nguyen Van Thu Street
District 1
Ho Chi Minh City 70000
VIETNAM
Phone +84 8 39104099
Fax +84 8 39103970
linh.nguyen@vn.ebmpapst.com

## Australia

**Australia**
ebm-papst A&NZ Pty Ltd.
10 Oxford Road
Laverton North, Victoria, 3026
AUSTRALIA
Phone +61 3 9360-6400
Fax +61 3 9360-6464
sales@ebmpapst.com.au
www.ebmpapst.com.au

**New Zealand**
ebm-papst A&NZ Pty Ltd.
Unit H, 61 Hugo Johnston Drive
1061 Penrose, Auckland
NEW ZEALAND
PO Box 112278,
1642 Penrose, Auckland
Phone +64 9 525-0245
Fax +64 9 525-0246
sales@ebmpapst.com.au
www.ebmpapst.com.au

# Notes

# Notes

www.ebmpapst.com

37634-7-8811 · 2014-03 · RA-4'
Printed in Germany

MIX
Paper from responsible sources
FSC® C010264
FSC
www.fsc.org

**ebm-papst**
**St. Georgen GmbH & Co. KG**

Hermann-Papst-Straße 1
D-78112 St. Georgen
Germany
Phone +49 7724 81-0
Fax +49 7724 81-1309
info2@de.ebmpapst.com

**ebm-papst**
**Mulfingen GmbH & Co. KG**

Bachmühle 2
D-74673 Mulfingen
Germany
Phone +49 7938 81-0
Fax +49 7938 81-110
info1@de.ebmpapst.com

**ebm-papst**
**Landshut GmbH**

Hofmark-Aich-Straße 25
D-84030 Landshut
Germany
Phone +49 871 707-0
Fax +49 871 707-465
info3@de.ebmpapst.com

ebmpapst

The engineer's choice

Общество с ограниченной ответственностью «МосЧип» ИНН 7719860671 / КПП 771901001
Адрес: 105318, г.Москва, ул.Щербаковская д.3, офис 1107

**Данный компонент на территории Российской Федерации**

**Вы можете приобрести в компании MosChip.**

Для оперативного оформления запроса Вам необходимо перейти по данной ссылке:

http://moschip.ru/get-element

Вы можете разместить у нас заказ для любого Вашего проекта, будь то серийное производство или разработка единичного прибора.

В нашем ассортименте представлены ведущие мировые производители активных и пассивных электронных компонентов.

Нашей специализацией является поставка электронной компонентной базы двойного назначения, продукции таких производителей как XILINX, Intel (ex.ALTERA), Vicor, Microchip, Texas Instruments, Analog Devices, Mini-Circuits, Amphenol, Glenair.

Сотрудничество с глобальными дистрибьюторами электронных компонентов, предоставляет возможность заказывать и получать с международных складов практически любой перечень компонентов в оптимальные для Вас сроки.

На всех этапах разработки и производства наши партнеры могут получить квалифицированную поддержку опытных инженеров.

Система менеджмента качества компании отвечает требованиям в соответствии с ГОСТ Р ИСО 9001, ГОСТ РВ 0015-002 и ЭС РД 009

**Офис по работе с юридическими лицами:**

105318, г.Москва, ул.Щербаковская д.3, офис 1107, 1118, ДЦ «Щербаковский»

Телефон: +7 495 668-12-70 (многоканальный)

Факс: +7 495 668-12-70 (доб.304)

E-mail: info@moschip.ru

Skype отдела продаж:
moschip.ru
moschip.ru_4
moschip.ru_6
moschip.ru_9