Compact fans for AC and DC

version 2014

ebmpapst

The engineer's choice

GREEN TECH

Trendsetter in fan technology

Uncompromising quality made by ebm-papst

Among the best.
Trendsetting with innovative technologies. Listening to customers' needs. Developing new ideas to meet requirements and realising them with pioneering spirit. This philosophy has made ebm-papst the technological leader in the world of fans.

A brand which has very little real competition because every fan is a product of decades of application expertise gained from large-volume production and because we are in a position to produce highly efficient quality products. Our intelligent solutions for electronics cooling ensure that you are one step ahead of competitors thanks to innovative, reliable top-quality technology which is cost-favourable and in line with market requirements. And if required, tailor-made right down to the last detail. In other words, if you need fans which do not yet actually exist, contact us.

Insist on ebm-papst.

Table of contents

Information
- The company 4
- GreenTech: The Green Company 6
- Expertise and technology 8
- Tailor-made 10
- Optional special designs 12
- Types of fans 13
- Selecting the correct fan 14
- Fan installation 15
- Service life 17
- Definitions 18
- Type code 19

DC axial fans 25
- Axial fans 31

DC centrifugal fans 89
- Centrifugal fans 93
- Tangential blowers 134
- Centrifugal fans and blowers 136

DC fans - specials 161
- Speed signal 164
- Alarm signal 168
- Vario-Pro® 173
- Speed setting 174
- Protected fans, Type of protection: IP 54 / IP 68 177

ACmaxx / GreenTech EC-Compact fans 179
- Axial fans 184

AC axial fans 201
- Axial fans 204

AC centrifugal fans 227
- Centrifugal fans 230

Accessories 237
- Guard grilles 238
- Filter guard grilles 246
- Inlet nozzles 248
- Connection cables 251
- Handheld programmer 252
- Accessories 253
- Electrical connections 254

ebm-papst representatives & subsidiaries 260

Company profile: ebm-papst

The entire scope of ventilation and drive technology: this is the world of ebm-papst. More than 11.000 people – in Germany and throughout the world – develop, produce and sell our motors and fans. Our global presence and our unique range of products based on a quality standard that surpasses every other have made us what we are: world market leader in motors and fans. Expertly knowing what our customers need and incessantly striving to arrive at the perfect application solution for a wide variety of different industries is what determines our daily work.
Those who know us know the high standards we apply to our work and know our creed: to be as close to our customers as possible and to simply be the best in terms of innovation and reliability.

Our history – Our drive

Rooted in ebm, PAPST and mvl, the three leading innovators in the development and production of motors and fans, ebm-papst has established itself as the world market leader. Now as ever, our legendary inventive spirit shines through in products that set standards in many segments of industry worldwide. We are proud to say that despite difficult competition, our performance has always been exemplary and outstanding – in business, in our personal relationship with our customers, and of course with respect to technology and engineering. For decades, we have contributed to the world of air technology and drive engineering with small revolutions and large milestones.

To maintain this advantage in skills and knowledge to get maximum quality and thus the highest degree of customer satisfaction, our employees around the world put their passion and dedication to work for you.

Passionately involved in R&D

Our catalogues just list the results of our incessant efforts in R&D: products of highest quality and reliability. After all, it is our passion to constantly try something new and improve what we have. In doing so, we take advantage of the latest development methods and state-of-the-art technology and invest quite heavily in R&D facilities. Best of all, though, we rely on excellently trained and skilled engineers and technicians to be at your service in R&D and Sales & Distribution.

Producing and safeguarding high-quality products and services

This is our promise without any compromise. Whether produced in one of our six factories in Germany or one of our eleven international production sites, our products always have the same high level of quality. This quality control is something you can definitely rely on! And this across all levels of production and throughout all processes: consulting customers, development, material selection through to picking certified, choice suppliers and on to the production of parts and final delivery. On top of this, our products have to pass the most rigorous tests under all realistic operating conditions: continuous stress test, salt spray test, vibration test, or precision noise measuring, just to mention a few. And the product gets clearance for serial production only after all the desired characteristics have been determined to be just right.

Environmental care is another priority with ebm-papst. This is why we have developed our product line in EC technology, which makes for very low power consumption. Due to our manufacturing philosophy, there is absolute focus on environmental care in production, recycling, waste and wastewater disposal.

Global Domestic

In order to be specialist for customised solutions throughout the world, you need strong partners. Global Domestic – i.e. being present all over the world and being a national company in each individual country – is how we have established ourselves in all important markets on this globe with our successful subsidiaries. And so you will always find ebm-papst close to home, speaking your language, and knowing the demands of your markets. Besides, our worldwide production alliance serves as a basis for competitive pricing. Our global services and logistic outlets, i.e. IT networking, safeguard short reaction times and just-in-time delivery.

All our efforts are documented in a comprehensive quality management system, both for products and services. Being certified as complying with the tough requirements of the international standards DIN EN ISO 9001, ISO/TS 16949-2 and of standard DIN EN ISO 14001 is just one seal of approval we have received for our unceasing efforts to provide only the best quality products and services.

Sustainability is at the centre of our thoughts and actions. Out of conviction!

Eco-friendliness and sustainability have always been at the core of our thoughts and actions. For decades, we have worked according to the simple but strict creed of our co-founder Gerhard Sturm: "Each new product we develop has to be better than the last one in terms of economy and ecology." GreenTech is the ultimate expression of our corporate philosophy.

GreenTech is pro-active development.
Even in the design phase, the materials and processes we use are optimised for the greatest possible eco-friendliness, energy balance and – wherever possible – recyclability. We continually improve the material and performance of our products, as well as the flow and noise characteristics. At the same time, we significantly reduce energy conumption. Close co-operation with universities and scientific institutes and the professorship we endow in the area of power engineering and regenerative energies allows us to profit from the latest research finings in these fields – and at the same time ensure highly qualified young academics.

GreenTech is eco-friendly production.
GreenTech also stands for maximum energy efficiency in our production processes. There, the intelligent use of industrial waste heat and groundwater cooling, photovoltaics and, of course, our own cooling and ventilation technology are of the utmost importance. Our most modern plant, for instance, consumes 91% less energy than currently specified and required. In this way, our products contribute to protecting the environment, from their origin to their recyclable packaging.

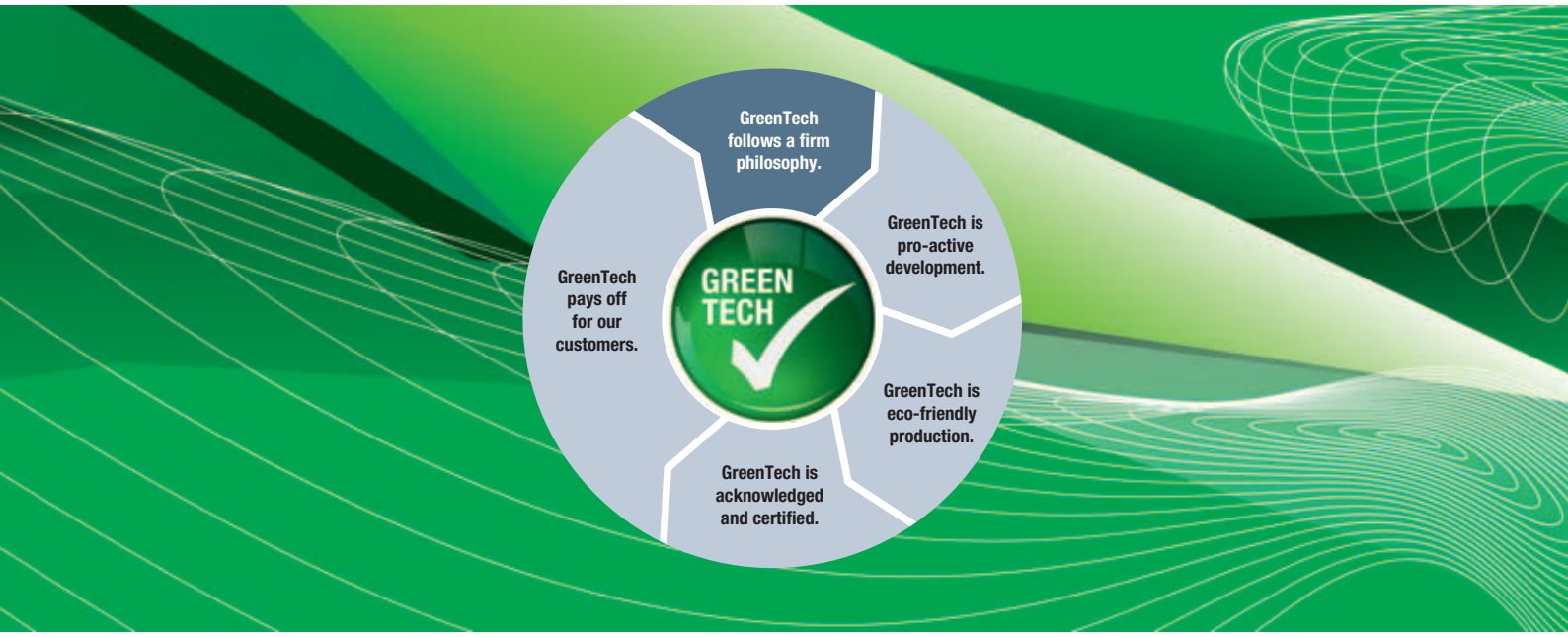

GreenTech is acknowledged and certified.
Every step in our chain of production meets the stringent standards of environmental specialists and the public.
This supports our position as Germany's most sustainable company 2013, as does the DEKRA Award 2012 we received in the category "Umwelt – Herausforderung Energiewende / Environment – Challenge: Transition to more sustainable energy systems", to name only a few of a large number of examples. The environmental advantage gained in the performance of the products developed from our GreenTech philosophy can also be measured in the fulfillment of the most stringent energy and environmental standards. In many instances, our products are already well below the thresholds energy legislation will impose a few years from now – several times over.

Our customers profit from this every day.
The heart of GreenTech is future-oriented EC technology from ebm-papst. The EC technology at the core of our most efficient motors and fans allows efficiency of up to 90%, saves energy at a very high level, significantly extends service life and makes our products maintenance-free. These values pay off not only for the environment, but every cent also pays off for the user! All ebm-papst products – even those for which GreenTech EC technology does not (yet) make sense from an application viewpoint – feature the greatest possible connection of economy and ecology.

Expertise and technology

Drive expertise

For the past 60 years, all conceivable types and applications of drive engineering have played an essential role at ebm-papst. A commitment that is the foundation for the development of optimum drive solutions – regardless of the type of fan and its usage. DC fans are generally equipped with electronically commutated external rotor motors; in order to save as much space as possible, commutation electronic components are integrated in the hub of the fan. Our AC fans are mostly driven by shaded-pole or capacitor motors based on the external rotor principle. In the 3900 and 9900 range of particularly slim fans, internal rotor motors are used.

Low-noise performance

Our aerodynamically optimised design and high mechanical precision produces outstanding noise properties in series production. So-called "soft" commutation electronics of the DC fans ensure an excellent noise performance. By avoiding steep switching edges when the individual coils are switched, this reduces the structure-borne noise from the motor. Computer-aided measurements and series of analyses performed in a state-of-the-art sound measuring chamber are conducted on each fan model from the very beginning.

Long service life

The bearing system plays a vital role both in the long life time and quietness of device fans. The SINTEC compact bearing provides most of the device fans with a proven bearing system. Constant low noise during the entire operating time and considerably lower shock sensitivity are the outstanding features of this bearing technology. In addition, with regard to temperature endurance, Sintec compact bearings can be used without problems in most applications. Despite the slightly higher noise and shock sensitivity of ball bearings, this bearing technology should be given preference for fans exposed to extreme thermal and adverse application conditions (e.g. extreme environmental conditions, critical installation position, etc.). The service life data provided in this catalogue is based on extensive service life tests and mathematically / scientifically proven service life calculations. Our product descriptions are continuously updated with all relevant data obtained from long-term tests.

Streamline: Aerodynamics

With the aid of state-of-the-art computer programs, we are able to optimise the fan impellers and the inner shape of the housing. Air output and available motor performance are exactly matched with the size of fan. This guarantees the low noise that is typical for ebm-papst, even at high back pressure.

Sturdy construction – in metal or plastic

Fans of all-metal construction: Sturdy and resistant. The housing is made of an aluminium alloy whereas the metal surfaces that are subject to corrosion are permanently protected by an impact- and abrasion-resistant electrophoretic baked enamel. This particular version is highly recyclable. Fans with fibreglass-reinforced plastic housing and impeller: Excellent stability and low weight distinguish this highly efficient fan concept. Combinations of metal housing and plastic impeller unite the advantages of both types of design.

Product images

The dimensioned drawings and product photos that appear in the catalogue are for orientation purposes and may differ in some details from the actual product design.

Product liability

Motors and fans from ebm-papst are components intended for proper installation. The customer bears responsibility for the overall end product.

Safety is included

It goes without saying that all ebm-papst fans conform to the approval requirements of the VDE (Association of German Electrical Engineers) and the standards and regulations of UL and CSA. All fans conform to the European Standard EN 60335 or EN 60950 plus those of the UL (Underwriters Laboratories) and CSA (Canadian Standards Association). With few exceptions, our DC fans are designed to meet the requirements of protection class 3 / protection class voltage. AC fans are protection class 1. ebm-papst fans meet the highest requirements of electrical safety. All design variants feature reverse polarity and locked rotor protection.

Quality in detail

It is in the important details where the motto "made by ebm-papst" comes into its own: Consistent adherence to development and design processes and a targeted commitment to quality along the entire process chain are the foundation for the fans' above-average service life. 100.000 hours and above are now possible.
The no-compromise ebm-papst quality assurance spans over all process levels – from the choice of materials and the use of carefully selected, certified suppliers, from the production of parts up to final assembly. These details combine to result in reliable fan products with an above-average service life.

ErP guidelines

All products with power consumption between 125 W and 500 kW are subject to the European "Energy-related Products Directive" (ErP) for improving energy efficiency, with the first stage coming into force from 2013 and the second as of 2015. Thanks to ground-breaking GreenTech EC technology, all of our fans and motors in these performance classes already exceed the ErP Directive today.

Tailor-made to meet your special requirements

Practice-oriented: Fans – customised and intelligent

ebm-papst has always developed customer-specific intelligent fans which meet the exact requirements of the application. We provide a wide range of standard fan types, in many sizes and designs; with intelligent motor features, monitoring and control functions as well as special designs for use under extreme conditions. They are all based on the standard type fans which you will find in this catalogue. Special fan types for your application can be produced in economical batch sizes. Our expert engineers will assist you in selecting the right configuration.

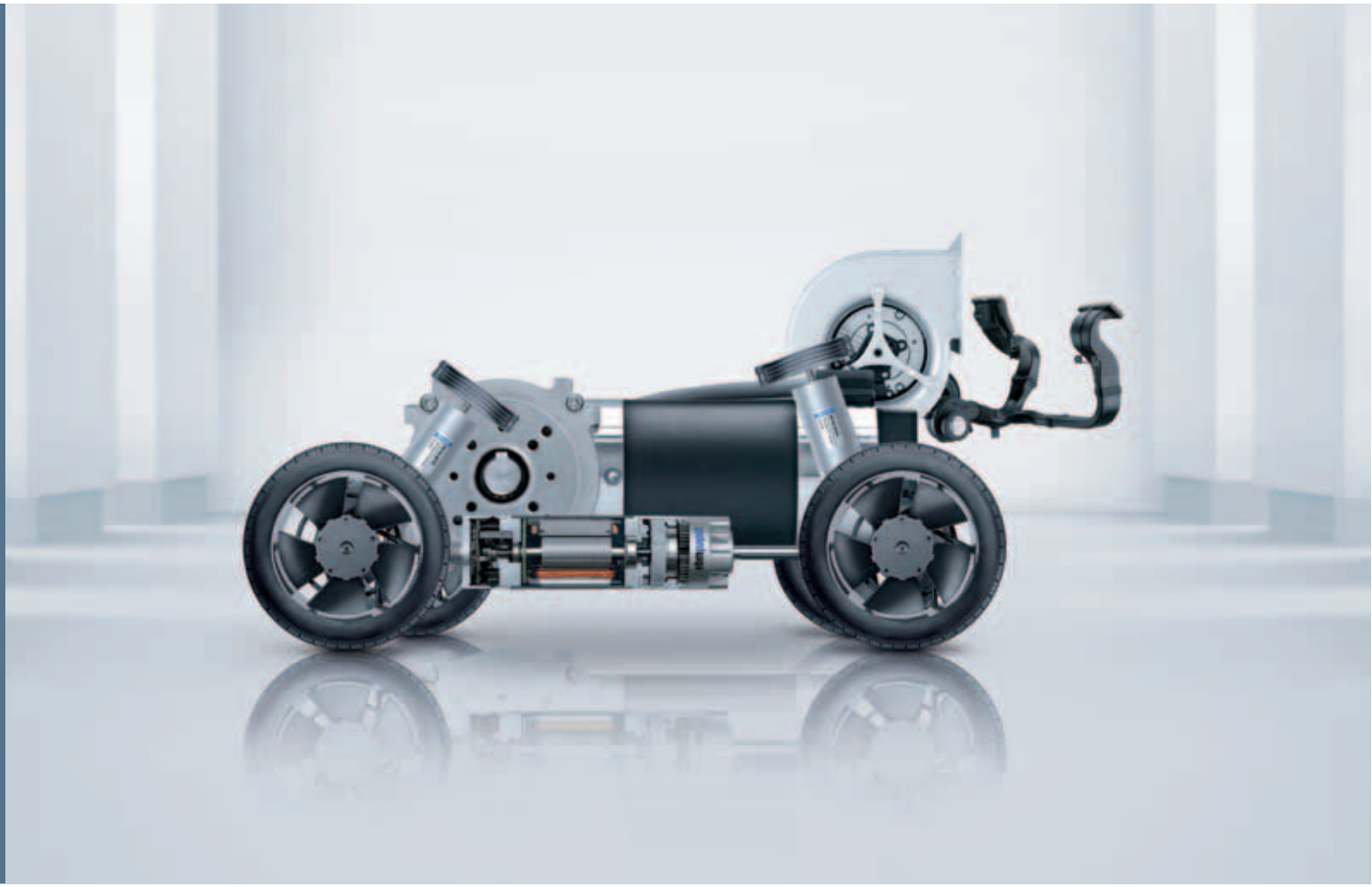

Innovation at its best:
Vario-Pro® with “intelligence inside”. Its programmed intelligence thanks to customer-specifically configured software modules makes the cooling of electronics even more economical and flexible. For example, temperature-dependent speed profiles are possible with a number of freely selectable interpolation points. External speed settings and a variety of combinable alarm and tachometer functions can also be programmed. The digital motor management achieves high control accuracy.

Higher type of protection for every type of application
ebm-papst provides, on request, many fan series in versions which conform to the requirements of type of protection IP 54 and IP 68: Their stator and all electrical components are fully encapsulated. Stainless steel ball bearings can be used for operation in particularly aggressive media and use under extreme environmental conditions, thus providing additional reliability.

Virtually everything is possible
Regardless of your cooling and ventilation tasks, we develop the right solution and what is more, the most economical one. Based on the fans listed in this catalogue, well over 4000 different versions are available.

Temperature-controlled fans
Fans with temperature-controlled speed have particularly quiet cooling characteristics. Thanks to integrated IC technology, they adapt their speed to the current cooling requirements, which results in a drastic reduction of noise in most operating modes. A temperature sensor provides the fan with thermal information: either externally via a single lead or integrated into the hub of the fan.

Speed setting via interfaces
With a wide range of DC fans with separate control input, ebm-papst provides an alternative to the NTC-controlled types of fans. They are especially suitable for systems and units which already have standard interfaces for varying speed via internal switching and control circuits. The main applications are units which demand load-dependent individual speed profiles or systems with stand-by minimum cooling requirements and varied speed increase at varying power peaks.

“Electronic tachometer” thanks to sensor signal
Do you wish to be informed about the current fan speed at all times? ebm-papst has fans with an integrated “electronic tachometer” which registers the actual value of the fan speed. Via an integrated sensor, the fan generates speed-dependent signals which can be directly utilised. Depending on the number of poles of the motor, 2, 3 or 6 pulses per revolution are generated.

Alarm signal for more safety
If your application requires monitored fan operation, in addition to speed monitoring, ebm-papst also provides a multitude of varying alarm signals. Depending on the type of fan in question, the signal is either static, already evaluated or interface-compatible.
The alarm signal output provides reliable longterm monitoring and a status signal if critical operating conditions evolve.

S-Force
The new measure of things!
When you need to provide extremely fast, powerful and efficient cooling for electronic components of all kinds, the generation of S-Force high-performance fans finishes first: in air performance, pressure build-up and technology. Extremely efficient drives and optimised aerodynamics form the core technology of the S-Force fans, which we offer in both an axial and brand-new centrifugal model.

S-Panther
S-Panther power delivered quietly. Wherever there is need for power and reduced noise, fans from the S-Panther range are the right solution. A strong pressure saddle curve at optimum air flow provides the power of a real big cat.

Optional special versions

(see chapter DC fans - specials)

In the catalogue, a text box in the upper right corner provides information on the special designs which are technically possible in the fan range.
Please note that these special versions are not possible for all voltages and speeds, and not in all combinations.The special versions are designed for specific customers and projects and are not usually available off the shelf.

Possible special designs are depicted on the catalogue page.

Speed signal /2, /12
The fan uses a separate wire to output information about its speed, and thus about the speed of the rotor. For technical details, please refer to page 164 ff.

Go / No-go alarm /37, /39
The fan uses a separate wire to output a static signal when it is stationary, thus providing information about whether or not the rotor is turning. For technical details, please refer to page 171 f.

Alarm with limit speed /17, /19
If one of the speeds defined in the fan electronics is not met, the fan conveys via a static signal that the set limit speed has not been met. For technical details, please refer to page 168 ff.

External temperature sensor
A NTC resistor (negative temperature coefficient) is attached to the fan via a separate wire and the fan changes its speed depending on the temperature on the NTC. For technical details, please refer to page 174.

Internal temperature sensor
In this case, the NTC is integrated into the fan and the fan changes its speed depending on the temperature at the NTC. For technical details, please refer to page 174.

PWM control input
The speed of the fan can be changed via a pulse-width-modulated signal. This signal is applied to a specially provided wire. For technical details, please refer to page 175.

Analogue control input
The speed of the fan can be changed via a control voltage. This control voltage is applied to a specially provided wire. For technical details, please refer to page 175.

Multi-option control input
The fan has a control input that the user can trigger either using a PWM signal, an analogue signal or a resistor. For technical details, please refer to page 176.

Protection against moisture
Protection for the fan's electronics against moisture and condensation. For technical details, please refer to page 177.

Type of protection IP 54 / IP 68
Protection of motor and PCB board against splashed water and humidity. For technical details, please refer to page. 177.

Protection against salt fog
Protection of fan against the damaging effects of salt fog. For technical details, please refer to page 177.

Direction of rotation
On many variants, the direction of rotation can be changed via a control input.

Types of fans and their function

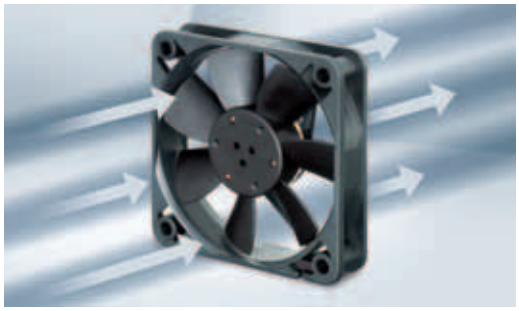

Axial fans:

High air flow with medium to relatively high pressure build-up

The air flow in axial fans, whose impeller is similar to that of a propeller, is conducted to a great extent parallel to the axis of rotation, in other words in the axial direction. Axial fans with free air delivery at zero static pressure have the lowest power input that rises with increasing back pressure. Axial fans for cooling of electronic equipment are mostly equipped with external housing and an electric motor integrated into the fan hub. This compact design allows space-saving accommodation of all devices; the flange is equipped with mounting holes.

Diagonal fans:

High flow rate at relatively high pressure build-up

At first glance diagonal fans only differ slightly from axial fans. Intake is axial, whereas exhaust is diagonal. Due to the conical shape of the wheel and housing, the air is pressurised more. In direct comparison with axial fans of the same size and comparable performance, these fans are distinguished by the lower operating noise at high pressures.

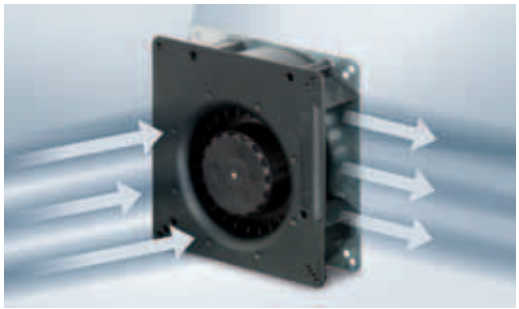

Centrifugal fans:

High pressure build-up at limited flow rate

Many of the cooling problems that occur can be optimally solved by axial and/or diagonal fans. If, for example, the required cooling air has to be conducted at an angle of 90° or if even high pressure is necessary, centrifugal fans are more effective. For your application, ebm-papst offers not only complete centrifugal fans but also motor/impeller combinations without external housing.

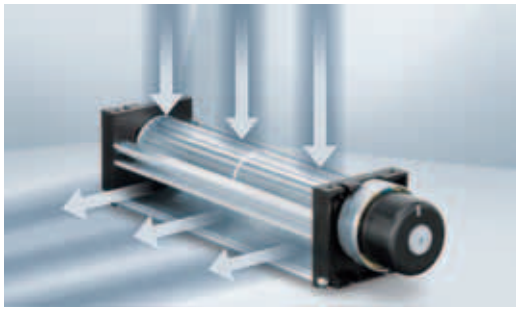

Tangential fans:

High flow rate at low pressure

Tangential fans are used above all-, for large-surface air flow in devices. The air flows through the roller-shaped impellers twice in the radial direction: in the intake area from the outside to the inside and in the outflow area from the inside to the outside. Whirls form in the roller due to the vanes which guarantee a steady flow of air through the impeller.

Selecting the correct fan

1. Dissipated energy

A large amount of the energy consumed by electrical and electronic devices is converted into heat. In selecting the correct fan, therefore, it is important to determine the dissipated energy that must be removed. The electrical power consumption of the unit to be cooled, often represents a suitable value for this purpose.

2. Permissible temperature rise

The air flow which the selected fan is required to generate, is determined by the dissipated energy and the permissible rise (ΔT) of the cooling air flow (from entry to exit of the device to be cooled). The max. allowable ΔT depends greatly on the temperature sensitivity of the individual device components.

ΔT = 5K means e.g. that the average air flow leaving the device to be cooled may only be 5°C warmer than the ambient temperature (a large volume of air is required for this purpose). A lower air flow rate is sufficient if a higher temperature difference (e.g. ΔT = 20K), can be tolerated.

3. Required cooling air flow

- In the below diagram a horizontal line is drawn from the dissipated enery to intersect with the selected ΔT line.
- Read down from this point to obtain the required value for the cooling air flow. The diagram is based on the following formula:

$$\dot{V}\,[m^3/h] \approx 3 \cdot \frac{Pv\,[w]}{\Delta T\,[K]}$$

4. Optimum operating range

The required fan, however, must also be able to deliver a suitable static pressure increase Δpf, in order to force the cooling air through the device. A fan must therefore be selected that provides the required air flow performance within its optimum operating range (see also the air performance curves under technical data).

5. Fan selection

If the requirements of an application are fulfilled by more than one fan, the noise level, space requirements, economy and ambient conditions will assist in making the final choice.

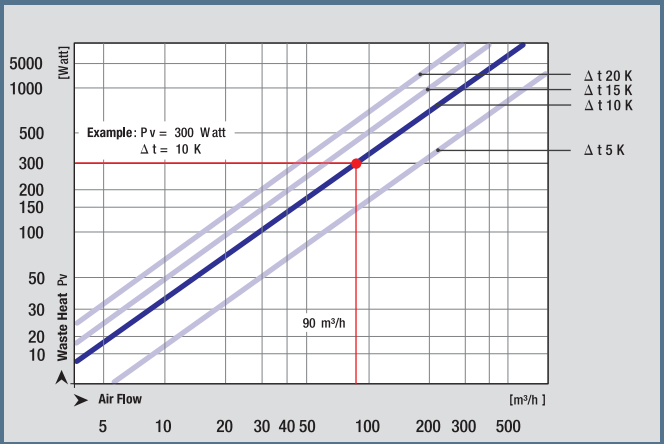

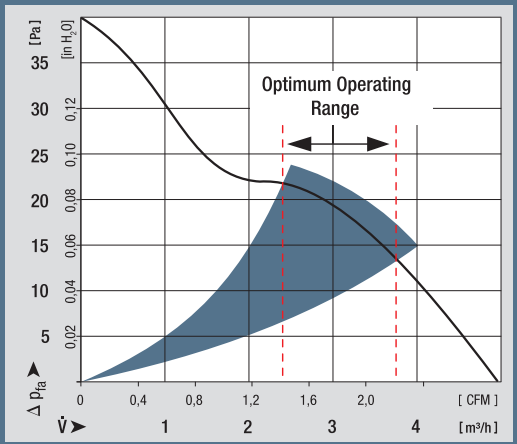

ebmpapst

Fan installation

Intake or exhaust side installation

Under ideal conditions, the operating point is represented as the intersection between the fan and loss curves, regardless of whether the fan is positioned at the air intake or exhaust side of the device. In addition to ensuring the required flow rate, several additional aspects must be considered for determining an appropriate fan concept.
The intake air currents of a fan are mainly laminar, comprising nearly the entire suction area. By contrast, the exhaust air of a fan is generally turbulent, while it flows on a preferred direction, e.g. axial for an axial fan. The turbulences of the exhaust intensify the heat transfer from components within the air currents, so that mounting the fan at the air intake side of the device is recommended for cooling and heating. Mounting the fan at the device intake is also advantageous because the fan will not be subjected to the dissipated heat of the device. Therefore, it operates at low ambient temperatures and has a higher life expectancy.

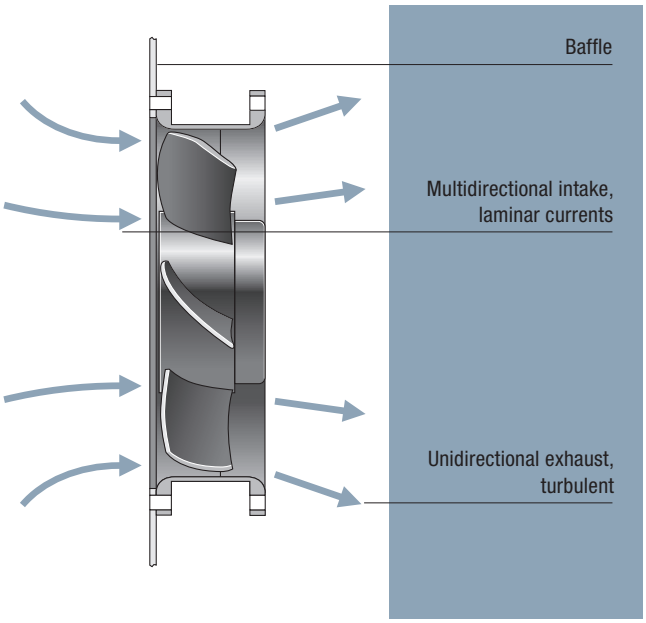

Information on installation

When a fan is operated for the first time in an application, the user may have noticed that the flow rate in the device was lower than expected. What is the reason for this?

- The values stated in this catalogue were determined under optimum, constant and comparable measurement conditions.
- Ideal mounting conditions under which free air intake and exhaust are present are seldom feasible in practice. Quite frequently the fans must be mounted in close proximity to other components or cabinet panels. As a consequence, the intake and exhaust currents may be restricted, causing the air flow to diminish and the noise level to increase. Fans are particularly sensitive to obstructions which are positioned directly in front of the output cross section as they often cause an increase in tonal noise.

Our advice: The distance between the fan and adjacent components should be at least equal to the installation depth of the fan.

Accident prevention

The turning rotor and the high speeds that are sometimes involved mean that our fan products carry an inherent risk of injury. They may only be operated after correct installation and with suitable protective facilities (e.g. with a guard grille). More information can be found in the internet at: **www.ebmpapst.com/safety**

Connection instructions for S-Force fans

Special features of S-Force fans

The S-Force series is the most powerful product series on the market. S-Force stands for the highest innovation in motor technology, fluid mechanics and electronics. The one-of-a-kind power density of the products requires special attention to the application at the customer's facility.

Service life

Due to the high currents in the fans, the load on the electrolyte capacitors is greater, which reduces the service life of the capacitor. As a larger or additional capacitor cannot be housed in the fan, the capacitor must be housed in the supply line.
If the power pack of the application has a corresponding capacitor, in some cases it may be possible to omit the external capacitor.

Fan	Capacitor required
S-Force axial	
8200 / 3200 JH3-JH4	no
4100 NH3 / NH4 / NH5 / NH6	no
4100 NH7 / NH8	yes
5300 / 5300 TD	no
6300 / 6300 TD	no
2200 FTD	no
S-Force centrifugal	
RET 97 TD	yes
RER 120 TD	yes
RER 133 TD	no
RER 160 NTDHH / RG 160 NTDHH	yes
REF 175 TD	no
RER 175 TD	no
RER 190 TD / RG 190 TD	no
RER 220 TD / RG 220 TD	no
RER 225 TDM / RG 225 TDM	no
RER 225 TD / RG 225 TD	no

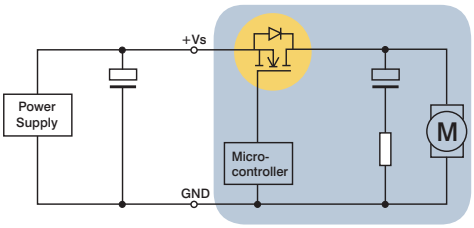

Recommended measure: Additional external capacitor (thus must be installed as close to the fan as possible < 30 cm).

Recommended capacitors

We recommend using the following capacitors from Rubycon:
24 VDC:
50 ZL 680 µF; 12,5 mm x 30 mm or
50 ZLH 680 µF 12,5 mm x 30 mm

48 VDC:
100 YXG 470 µF; 16 mm x 35,5 mm or
100 ZLH 470 µF 16 mm x 31,5 mm

Other capacitors with equal or greater capacitance and equal or lower serial resistance can also be used.
ebm-papst St. Georgen offers the following capacitors ex stock:
24 VDC: 1000 µF / 50 V, 16 mm x 25 mm
Art. No.: 992 0345 000 (LZ 354)

48 VDC: 680 µF / 100 V, 18 mm x 40 mm
Art. No. : 992 0355 000 (LZ 355)

Service life

Service life data from ebm-papst St. Georgen

Our fans catalogue gives three different values for the service life of each product. The first column usually states the service life L_{10} at 40°C. the second column usually states the service life L_{10} at T_{max}. Exceptions are marked in the column headings. The third column states the new value, life expectancy L_{10IPC} (40 °C).

Sound power level	Sintec sleeve bearings / Ball bearings	Power consumption	Nominal speed	Temperature range	Service life L_{10} (40 °C) ebm-papst Standard	Service life L_{10} (T_{max}) ebm-papst Standard	Life expectancy L_{10IPC} (40 °C) see page 17	Curve
Bel(A)	□ / ■	Watts	RPM	°C	Hours	Hours		
5,2	■	1,8	5 900	-20...+70	85 000 / 42 500	142 500		①
5,4	■	1,5	6 300	-20...+70	85 000 / 42 500	142 500		②

Example of the service life figures on the catalogue page.

Service life L_{10} (40 °C) and L_{10} (T_{max})

The values given in the first two columns have been derived from intensive, in-house service life endurance tests, in which our products are operated in various positions at 40°C and 70°C until they fail. A fan is deemed to have failed when it deviates from its defined air flow and speed values, or when the operating noise becomes noticeable. Such tests can take several years before a representative number of failures have been registered, and even today, some fans are still in the process of endurance testing, even though they began tests in the 1980s. These fans are proof of the legendary "made by ebm-papst" reliability.

Test results are presented in a diagram and the service life of the product L_{10} at the temperature tested is determined on the basis of the Weibull distribution.

These tests have given us years of experience in the way various design parameters and temperatures can affect the service life of a product. Data for service life at various temperatures for new products can be stated with a very high degree of precision on the basis of tests, product specifications and of commonalities in the design of the product.

New: Life expectancy L_{10IPC} (40 °C)

The new third service life column states the expected service life L_{10IPC} . This information is based on the international norm IPC 9591. Again here, the foundations for the service life values are our service life endurance tests at high ambient temperatures. The service life at temperatures below the test temperatures is calculated using fixed factors. This method produces much higher service life values, especially at room temperature (see diagram on right).

Summary:

The life span calculations have been carried out to the best of our knowledge and are based on experience gained by ebm-papst. The specified L_{10} (40 °C), L_{10} (T_{max}) and L_{10IPC} (40 °C) values all allow statements to be made about the theoretical calculated service life under certain assumptions. The values determined here are extrapolations from our own service life tests and from statistical variables. In the respective customer applications, different influences may occur which cannot be included in the calculations due to their complexity. The service life information is explicitly not a guarantee of service life, but strictly a theoretical quality figure.

Fans in an endurance test cabinet at ebm-papst St. Georgen.
1500 fans are operated in temperature cabinets until they fail.

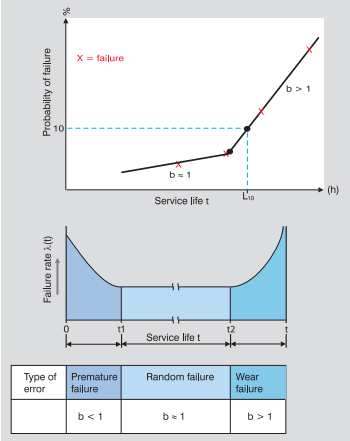

Bathtub curve and Weibull distribution.

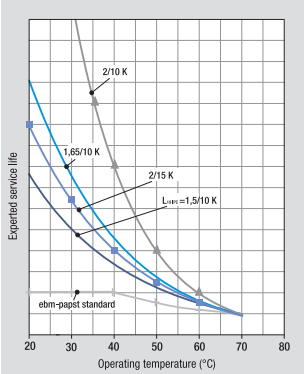

Example of the influence of factors from various manufacturers on the expected service life.

Definitions

Nominal voltage (Volts)
The voltage at which the nominal values (the tabular values listed in this catalogue) were determined. The fan operation for DC fans is not limited to the nominal voltage. Fan speed and fan performance can vary according to the permissible voltage range that is specified on the nameplate of each fan. Be aware here that this is not a pulsed or modulated DC voltage.

Frequency (Hz)
ebm-papst AC fans are made for operating frequencies of 50 Hz or 60 Hz. Their technical data alter accordingly.

Air flow [m³/h]
The air performance of the fan in free air operation, i.e. the fan blows into the free space without static pressure build-up.

Fan curves
The fan curves are determined in accordance with DIN ISO 5801 specifications on a dual-chamber test stand with intake-side measurement. This measurement technique closely approximates the operating conditions experienced in typical applications for fans and yields realistic performance curves. The curves apply to an air density of $\rho = 1.2$ kg/m³, corresponding to an air pressure of 1013 mbar at 20 °C. Variations in air density affect pressure generation but not the flow rate. The pressure generated at other air densities may be estimated with the formula $\Delta\rho 2 = \Delta\rho 1\ (\rho 2 / \rho 1)$. The nominal speed values, air flow and power input listed in the table were measured in free air operation with horizontal shaft at an ambient temperature of 20 +5 °C, air density $\rho = 1.2$ kg/m³ after a warm-up period of 5 min.

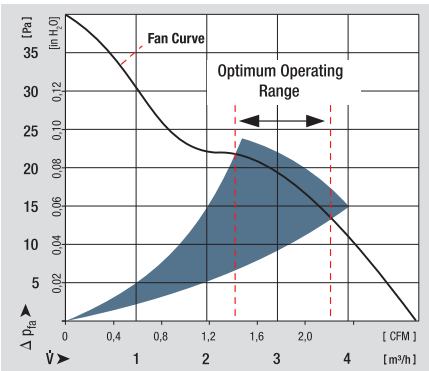

Optimum operating range
During operation, fans are required to produce an air flow with a simultaneous increase of pressure. These operating conditions are described in the section "Optimum Operating Range". The optimum operating range is therefore always indicated in this catalogue in the shaded area. In this range the fans operate best with respect to efficiency and noise level. Within this optimum operating range the noise level only fluctuates insignificantly.

Noise [dB(A), Bel(A)]

1. Sound pressure level – dB(A)
Noise ratings of the fan in free air operation, i.e. at maximum flow rate.

2. Sound power level – Bel(A) / dB(A)
Extent of the overall sound radiation of the fan. The sound power level is determined in the optimum operating range.

PAPST Sintec® sleeve bearings
A particularly efficient bearing system with excellent qualities:
– Very precise, large sintered bearings
– Low running noise
– High service life expectancy
– Insensitive to shock and vibration

Ball bearings
Precision ball bearings for particularly high ambient temperatures and high service life expectancy.

Input power [Watts]
Input performance of the fan motor when operating free blowing at nominal voltage. Depending on the operating condition in the application, the power input may be higher.

Temperature range [°C]
The permissible ambient temperature range within which the fan can be expected to run continuously.

Service life [h]

Service life L_{10} at 40 °C and T_{max}
Standard figures for service life at ebm-papst. These two temperatures are based on intensive, in-house endurance tests and on the experience more than 60 years developing fans.

Life expectancy L_{10IPC} (40 °C)
Information calculated in line with the norm IPC 9591. Data based on the internal expected service life at 70°C, more optimistically extrapolated to 40°C.

We expressly state that none of the information or data in this catalogue is to be construed as a guarantee or warranty of properties.

Unit conversion

Air flow	**Pressure**
1cfm = 1,7 m³/h	1Pa = 1x10⁻⁵ bar
1l/s = 3,6 m³/h	1 inch H_2O = 249 Pa
1l/min = 0,06 m³/h	1 mm H_2O = 9,81 Pa

Subject to technical alterations.
Our products are not designed for use in the aerospace industry!
German and international patents, registered designs and utility models.
ebm-papst is a registered trademark of ebm-papst Mulfingen GmbH & Co. KG.
PAPST, SINTEC, VARIOFAN and Vario-Pro are registered trademarks of ebm-papst St. Georgen GmbH & Co. KG.

Type code

3-digit DC axial fan e.g. 412 FM

Housing dimensions (W x H x D)

Value	Edge dimensions (W x H)	Installation depth (D)
2	25 x 25 mm	8 mm
4	**40 x 40 mm**	**10 / 20 / 25 / 28 mm**
5	50 x 50 mm	15 mm
6	60 x 60 mm	15 / 25 / 32 mm
7	70 x 70 mm	15 mm

Operating voltage

Value	Nominal voltage
2	**12 V**
4	24 V
5	5 V
8	48 V

4 1 2 F M

Motor and housing version

Value	Version
1	**4xx fan, 10 / 20 / 25 / 28 mm (D)**
1	6xx fan, 15 / 25 / 32 mm (D)
2	25 / 28 mm (D)
3	63x fan, 25 mm (D)
5	2xx fan, 8 mm (D)

Options (various versions possible)

A	Analogue speed control input (input voltage: 0…5 / 0...10 V DC)
D	Reinforced flange corners with through-holes (Series 44xx F)
	Constant speed control independent from operating voltage
E	Economy fan with round flange
F	**Flat construction / frequency-modulated signal**
G	Sleeve bearing
H	High speed
HH	Further increased speed
H3-H8	Additional further increased speeds
	(H8 - maximum fan speed)
I	Integrated temperature sensor (NTC behaviour, i.e. thermistor)
J	Jet characteristic / rigid curve
L	Low speed
M	**Medium speed**
ML	Between low and medium speed
N	Standard or basic speed (only DC fans)
O	Multi-option speed control input (analogue or PWM signal)
P	PWM speed control input (pulse-width modulated signal)
R	Moisture protection coating
	Circuit board and winding (IP 20), optional stainless steel ball bearing
S	Speed signal (additional wires for hall signal, obsolete technology)
T	External temperature sensor (NTC behaviour, i.e. thermistor)
TD	Turbo drive (extremely powerful 3-phase motor)
U	Environmentally friendly fan (min. IP 54)
V / VP	VARIOFAN
W	Additional wires (standard length 310 mm)
X	Mounting bore hole 3.7 mm
-xxx	Variant number

4-digit DC axial fan, e.g. 4312 GM

Housing dimensions (W x H x D)

Value	Edge dimensions (W x H)	Installation depth (D)
2	Ø 220 x 200 mm	51 mm
3	92 x 92 mm	25 / 32 / 38 mm
4	**119 x 119 mm**	**25 / 32 / 38 mm**
5	127 x 127 mm	38 mm
5	135 x 135 mm	38 mm
5	140 x 140 mm	51 mm
6	Ø 172 mm	51 mm
6	Ø 172 x 150 / 160 mm	51 mm
7	Ø 150 mm	38 / 55 mm
8	80 x 80 mm	25 / 32 / 38 mm

Connection type and direction of rotation

Value	Connection type	Direction of rotation
1	**Wires, length = 310 mm**	
5	Wires, length = 310 mm	
6	Plug, 2.8 x 0.8 mm	Counter-clockwise (CCW)
7	Plug, 2.8 x 0.8 mm	Clockwise (CW)
8	Plug, 2.8 x 0.5 mm	Counter-clockwise (CCW)
9	Plug, 2.8 x 0.5 mm	Clockwise (CW)

4 3 1 2 G M

Motor and housing version

Value	Version
1	38 mm (D)
2	38 mm (D)
3	**32 mm (D)**
4	25 / 38 / 51 mm (D)

Operating voltage

Value	Nominal voltage
2	**12 V**
4	24 V
6	36 V
8	48 V

Options (various versions possible)

A	Analogue speed control input (input voltage: 0…5 / 0...10 V DC)
D	Reinforced flange corners with through-holes (Series 44xx F)
	Constant speed control independent from operating voltage
DV	Diagonal Venturi fan
E	Economy fan with round flange
F	Flat construction / frequency-modulated signal
G	**Sleeve bearing**
H	High speed
HH	Further increased speed
H3-H8	Additional further increased speeds
	(H8 - maximum fan speed)
I	Integrated temperature sensor (NTC behaviour, i.e. thermistor)
J	Jet characteristic / rigid curve
L	Low speed
M	**Medium speed**
ML	Between low and medium speed
N	Standard or basic speed (only DC fans)
O	Multi-option speed control input (analogue or PWM signal)
P	PWM speed control input (pulse-width modulated signal)
R	Moisture protection coating
	Circuit board and winding (IP 20), optional stainless steel ball bearing
S	Speed signal (additional wires for hall signal, obsolete technology)
T	External temperature sensor (NTC behaviour, i.e. thermistor)
TD	Turbo drive (extremely powerful 3-phase motor)
U	Environmentally friendly fan (min. IP 54)
V / VP	VARIOFAN
W	Additional wires (standard length 310 mm)
X	Mounting bore hole 3.7 mm
-xxx	Variant number

All dimensions in millimetres [mm].

Type code

DC centrifugal fan e.g. RER 160-28/12 N

Options (various versions possible)

A	Analogue speed control input (input voltage: 0…5 / 0...10 V DC)
D	Reinforced flange corners with through-holes (Series 44xx F)
	Constant speed control independent from operating voltage
E	Economy fan with round flange
F	Flat construction / frequency-modulated signal
G	Sleeve bearing
H	High speed
HH	Further increased speed
H3-H8	Additional further increased speeds
	(H8 - maximum fan speed)
I	Integrated temperature sensor (NTC behaviour, i.e. thermistor)
J	Jet characteristic / rigid curve
L	Low speed
M	Medium speed
ML	Between low and medium speed
N	**Standard or basic speed (only DC fans)**
O	Multi-option speed control input (analogue or PWM signal)
P	PWM speed control input (pulse-width modulated signal)
R	Moisture protection coating
	Circuit board and winding (IP 20), optional stainless steel ball bearing
S	Speed signal (additional wires for hall signal, obsolete technology)
T	External temperature sensor (NTC behaviour, i.e. thermistor)
TD	Turbo drive (extremely powerful 3-phase motor)
U	Environmentally friendly fan (min. IP 54)
V / VP	VARIOFAN
W	Additional wires (standard length 310 mm)
X	Mounting bore hole 3.7 mm
-xxx	Variant number

Type — Housing and fan impeller versions

Type	Housing	Impeller blade design
RE	None	Non-curved, no direction of rotation set
REF	None	Forwards/backwards-curved impeller blades, flat
RER	**None**	**Backwards-curved impeller blades**
RET	None	Forwards-curved impeller blades
RG	Square	Forwards/backwards-curved impeller blades
RL	Round	Forwards-curved impeller blades
RLF	Round	Forwards/backwards-curved impeller blades, flat
RV	Round	Forwards-curved impeller blades

Height fan impeller blade

R E R 1 6 0 - 2 8 / 1 2 N

Diameter fan impeller

Operating voltage

Value	Nominal voltage
/12	**12 V**
/14	24 V
/18	48 V

Tangential blower e.g. QG 030-148/12

Housing dimensions (W x H)

Value	Edge dimensions (W x H)	Impeller length	Total length
148	**48 x 50 mm**	**148 mm**	**201 mm**
198	48 x 50 mm	198 mm	258 mm
303	48 x 50 mm	303 mm	363 mm
353	48 x 50 mm	353 mm	413 mm

Type — Housing and fan impeller versions

Type	Housing	Impeller blade design
QG	**Round**	**Compressor drum**

Q G 0 3 0 - 1 4 8 / 1 2

Diameter fan impeller

Operating voltage

Value	Nominal voltage
/12	**12 V**
/14	24 V

All dimensions in millimetres [mm].

Type code

4-digit GreenTech EC compact fans axial e.g. ACi 4420 HH

A C i 4 4 2 0 H H

Housing dimensions (W x H x D)

Value	Edge dimensions (W x H)	Installation depth (D)
1	Ø 98,5 mm	130 mm
3	92 x 92 mm	38 mm
4	**119 x 119 mm**	**25 / 32 / 38 mm**
6	Ø 172	51 mm
8	80 x 80 mm	32 mm

Operating voltage

Value	Nominal voltage	Frequency	Design
0	115 / 230 V	50 / 60 Hz	Wide voltage range input (85-265 V AC)
1	115 V	50 Hz	
2	**230 V**	**50 Hz**	

Basic design

Value	Design
AC	DC basic fan with integrated AC/DC power supply unit
ACi	**EC technology (electronics completely integrated)**

Motor and housing version

Value	Version
0	130 mm (D)
1	51 mm (D)
2	38 / 51 mm (D)
3	32 mm (D)
4	**25 / 38 mm (D)**

Bearing type and insulation class

Value	Bearing type	Insulation class
0	**Ball bearing**	**E**

Options (various versions possible)

A	Analogue speed control input (input voltage: 0…5 / 0...10 V DC)
D	Reinforced flange corners with through-holes (Series 44xx F) Constant speed control independent from operating voltage
E	Economy fan with round flange
F	Flat construction / frequency-modulated signal
G	Sleeve bearing
H	High speed
HH	**Further increased speed**
H3-H8	Additional further increased speeds (H8 - maximum fan speed)
I	Integrated temperature sensor (NTC behaviour, i.e. thermistor)
J	Jet characteristic / rigid curve
L	Low speed
M	Medium speed
ML	Between low and medium speed
N	Standard or basic speed (only DC fans)
O	Multi-option speed control input (analogue or PWM signal)
P	PWM speed control input (pulse-width modulated signal)
R	Moisture protection coating Circuit board and winding (IP 20), optional stainless steel ball bearing
S	Speed signal (additional wires for hall signal, obsolete technology)
T	External temperature sensor (NTC behaviour, i.e. thermistor)
TD	Turbo drive (extremely powerful 3-phase motor)
U	Environmentally friendly fan (min. IP 54)
V / VP	VARIOFAN
W	Additional wires (standard length 310 mm)
X	Mounting bore hole 3.7 mm
-xxx	Variant number

AC axial fan e.g. 3950 L

3 9 5 0 L

Housing dimensions (W x H x D)

Value	Edge dimensions (W x H)	Installation depth (D)
3	**92 x 92 mm**	**25 / 38 mm**
4	119 x 119 mm	25 / 32 / 38 mm
5	127 x 127 mm	38 mm
5	135 x 135 mm	38 mm
5	140 x 140 mm	51 mm
6	Ø 172 mm	51 / 52 mm
7	Ø 150 mm	55 mm
7	Ø 150 x 172 mm	38 mm
8	80 x 80 mm	38 mm
9	119 x 119 mm	25 mm

Operating voltage

Value	Nominal voltage	Frequency
0	115 V	60 Hz
2	115 V	60 Hz
3	115 V	60 Hz
4	115 V	50 Hz
5	**230 V**	**50 Hz**
6	115 V / 230 V	50 Hz / 60 Hz
7	230 V	50 Hz
8	230 V	60 Hz
9	230 V	60 Hz

Options (various versions possible)

A	Air intake via struts (attachment bore ø)
E	Made by ebm-papst Mulfingen (6xxx, 7xxx range) or round flange
H	Speed signal 1 Impulses per 360 degrees (additional magnet sensor and hall sensor)
L	Low speed
M	Medium speed
N	Air intake via struts (ø mounting bore hole)
R	Moisture protection coating Circuit board and winding (IP 20), optional stainless steel ball bearing
S	Integrated temperature switch
T	Assembly bracket
U	Environmentally friendly fan (min. IP 54)
V	Air exhaust via struts
W	Additional wires (standard length 310 mm)
X	Mounting bore hole 3.7 mm
-xxx	Variant number
Z	Air exhaust via struts, reinforced flange corners with through-holes

Motor and housing version

Value	Version
4	Shaded-pole motor, 55 mm (D) medium speed
5	Shaded-pole motor, 38 mm (D) medium / high speed
6	Shaded-pole motor, 38 mm (D) high speed
7	Shaded-pole motor, 38 mm (D) with assembly bracket
8	Shaded-pole motor, slow / medium speed
9	**Shaded-pole motor, 25 / 38 mm (D)**

Bearing type and insulation class

Value	Bearing type	Insulation class
0	**Sleeve bearing**	**E**
5	Ball bearing	E
6	Ball bearing	F
8	Ball bearing	E

All dimensions in millimetres [mm].

Type code

AC centrifugal fan e.g. RER 160-28/56 S

Options (various versions possible)

A	Intake via bars
E	Made by ebm-papst Mulfingen (6xxx, 7xxx range) or round flange
H	Speed signal 1 Impulses per 360 degrees (additional magnet sensor and hall sensor)
L	Low speed
M	Medium speed
N	Fan intake via bars (O mounting bore hole)
R	Moisture protection coating Circuit board and winding (IP 20), optional stainless steel ball bearing
S	**Integrated temperature switch**
T	Assembly bracket
U	Environmentally friendly fan (min. IP 54)
V	Air exhaust via bars
W	Additional wires (standard length 310 mm)
X	Mounting bore hole 3.7 mm
-xxx	Variant number
Z	Air exhaust via bars, reinforced flange joints with through-holes

Type — Housing and fan impeller versions

Type	Housing	Impeller blade design
RE	None	Non-curved, no direction of rotation set
REF	None	Forwards/backwards-curved impeller blades, flat
RER	**None**	**Backwards-curved impeller blades**
RET	None	Forwards-curved impeller blades
RG	Square	Forwards/backwards-curved impeller blades
RL	Round	Forwards-curved impeller blades
RLF	Round	Forwards/backwards-curved impeller blades, flat
RV	Round	Forwards-curved impeller blades

Height fan impeller blade

R E R 1 6 0 - 2 8 / 5 6 S

Diameter fan impeller

Operating voltage

Value	Nominal voltage	Frequency
/00	115 V	60 Hz
/06	115 V	60 Hz
/50	230 V	50 Hz
/56	**230 V**	**50 Hz**

DC centrifugal fan e.g. R2E 190-AO 26-05

Note: This type code specifies fans from ebm-papst Mulfingen and can be used to clearly identify and order them:

Type — Housing and fan impeller versions

A	Axial fan
S	Axial fan with safety grille
W	Axial fan with wall ring
V	Axial combination
R	**Centrifugal fan, one-sided intake**
G	Centrifugal blower, one-sided intake (with scroll housing)
B	Centrifugal fan, double-sided intake
G	Centrifugal blower, double-sided intake (with scroll housing)
K	Centrifugal combination

Diameter fan impeller

Mechanical design code

Mechanical variants code

R 2 E 1 9 0 - A O 2 6 - 0 5

Number of poles (AC)

2	**2-pole**

Number of cores (DC/EC)

1	1-phase/core
3	3-phase/core

Motor type

D	Three-phase motor
E	**One-phase motor with operating capacitor**
G	DC/EC motor

Electrical design code

All dimensions in millimetres [mm].

wob

GREEN TECH

Quiet but powerful.

Our new compact fan in the 420J range is a particularly quiet and energy-efficient DC fan. Compared to its predecessors it uses 70 % less power and is up to 5 dB(A) quieter, and it nonetheless achieves an airflow of 38 m³/h and a pressure build-up of up to 175 Pa in the saddle area – all squeezed in to just 40 x 40 x 28 mm. It works efficiently even in harsh environmental conditions. The ideal choice for IT servers, routers or compact frequency converters and welding inverters. For more information, visit: **www.ebmpapst.com**

ebmpapst

The engineer's choice

DC axial fans

DC axial fan overview 27
DC axial fans / DC diagonal fans 31

DC axial fans

Technical information

Range of fans
ebm-papst offers you the widest full product line of DC axial and diagonal fans: From 25 mm to 280 mm in size. Every single type of fan can be optimally integrated in the respective device concept. The highly economical brushless motor technology of these fans provides a unique variety of intelligent innovations that can be realised today at prices that would have been unthinkable just a few years ago.

Electronic protection against reverse polarity
ebm-papst DC fans have electronically commutated drives with electronic protection against reverse polarity. The electronics are conveniently located in the fan hub.

Product life expectancy
A distinctive feature of DC fan technology is the convincingly high product life expectancy. Thanks to the excellent efficiency of the brushless drives, the thermal load of the bearings is reduced, thus considerably increasing the life expectancy of the fans.

Type of protection
DC fans with sleeve and ball bearings are powered by class E insulated motors. All ebm-papst fans conform to the requirements of type of protection IP 20. Fans conforming to IP 54 / IP 68 and special types of protection are also available.

Voltage range
Many of our DC fans can be operated on voltages that are up to 50% lower and 25% higher than their nominal voltage (see Voltage range in the technical tables). This enables the air performance to be adapted to the cooling requirements and allows the noise to be reduced, even if the fan does not have a control input.

Closed-loop speed control and monitoring
Closed-loop speed control and function monitoring are becoming increasingly important in many applications. ebm-papst offers many fans in the standard design with a control input and open collector speed signal.

S-Force
The new S-Force fans with their extremely high blower capacity of up to 950 m^3/h and pressure build-up of up to 1200 pascals are capable of dealing with the extreme heat load. If needed, these fans can produce up to 100% more output under full load and they work with a much broader delivery bandwidth than current models. This makes them ideal for equipment and systems with a high density of components. Thanks to intelligent motor features, they can be individually adapted for any application. S-Force fans are available in 5 standard dimensions.

S-Panther
S-Panther power delivered quietly. Wherever there is need for power and reduced noise, fans from the S-Panther range are the right solution. A strong pressure saddle curve at optimum air flow provides the power of a real big cat.

Axial fans for DC operation

Overview of air performance

Dimensions	Series	Air flow		Page
mm		m³/h		
25 x 8	250	2,3...4,6		31
40 x 10	400 F	6...9		32
40 x 20	400	10...13,5		33
40 x 28	420 J	24...38	NEW	34
50 x 15	500 F	11...20		35
60 x 15	600 F	19...33		36
60 x 25	620	21...67		37
60 x 25	630	40...44		38
60 x 25	600 N	21...56		39
60 x 25	600 N VARIOFAN	16...41		40
60 x 32	600 J	70...82		41
70 x 15	700 F	28...44		42
80 x 25	8450	32...117		43
80 x 25	8400 N	33...79		44
80 x 25	8400 N VARIOFAN	20...58		45
80 x 32	8300	32...80		46
80 x 38	8200 J	132...222		47
92 x 25	3400 N	61...102		48
92 x 25	3400 N VARIOFAN	44...84		49
92 x 32	3300	56...107		50
92 x 32	3300 N	56...133	NEW	51
92 x 38	3200 J	130...280		52
92 x 38	3250 J	145...270	NEW	53
119 x 25	4400 F	94...170		54
119 x 25	4400 FN	200...225		55
119 x 32	4300	95...204		56
119 x 32	4300 VARIOFAN	65...170		57

Subject to alternations

Axial fans for DC operation

Overview of air performance

Dimensions	Series	Air flow	Page
mm		m³/h	
□ 119 x 38	4400	100...285	58/59
□ 119 x 38	4100 N	160...237	60
□ 119 x 38	4100 NHH..NH6	260...440	61
□ 119 x 38	4100 NH7..NH8	500...570	62
□ 119 x 38	DV 4100	280	63
□ 127 x 38	5200 N	187...340	64
□ 127 x 38	DV 5200	270...320	65
□ 135 x 38	5100 N	260	66
□ 140 x 51	5300	340	67
□ 140 x 51	5300 TD	410...670	68
Ø 150 x 38	7100 N	308...360	69
Ø 150 x 55	7200 N	360	70
172x160x52	6100 N	350	71
Ø 172 x 51	6300	395...545	72
Ø 172 x 51	6300 TD	600...930	73
172x160x51	6300 TD	710...930	74
Ø 172 x 51	DV 6300	630...1100 NEW	75
172x150x51	6400	350...480	76
172x150x51	6400 TD Turbofan	90...900	77
172x160x51	DV 6400	530	78
172x160x51	DV 6400 TD Turbofan	100...680	79
220x200x51	2200 FTD	790...1220	80
□ 225 x 80	2200 TD	1000	81
□ 225 x 80	K1G 200	1020...1245	82
□ 225 x 89	K3G 200	725...905	83
Ø 250	W1G 250	2070	84
Ø 300	*1G 300	2320...2345	86

Subject to alternations

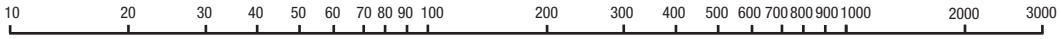

ebmpapst

Axial fans for DC operation

Overview of technically feasible designs

	Series	Dimensions	VDE, UL, CSA	Simtec sleeve bearings/ball bearings	Speed signal	Go / No-go alarm	Alarm with limit speed	External temperature sensor	Internal temperature sensor	PWM control input	Analogue control input	Multi-option control input	Humidity protection	IP >= IP 54	IP >= IP 68	Salt fog protection	Reversible direction of rotation	Page
	Axial fans																	
	Series	**mm**							**OPTIONAL**									**p.**
	250	25 x 25 x 8	ja	□	•	–	–	–	–	–	–	–	•	–	–	–	–	31
	400 F	40 x 40 x 10	ja	□	•	•	–	–	–	–	–	–	•	–	–	–	–	32
	400	40 x 40 x 20	ja	□	•	•	–	–	–	•	–	–	•	–	–	–	–	33
NEW	420 J	40 x 40 x 28	ja	■	•	•	–	•	–	•	–	–	•	–	–	•	–	34
	500 F	50 x 50 x 15	ja	□	•	•	–	–	–	•	–	–	•	–	–	–	–	35
	600 F	60 x 60 x 15	ja	□	•	•	–	–	–	•	–	–	•	–	–	–	–	36
	620	60 x 60 x 25	ja	■	•	•	•	•	•	•	•	–	•	–	–	–	–	37
	630	60 x 60 x 25	ja	■	•	•	•	•	–	•	•	–	•	•	•	•	–	38
	600 N	60 x 60 x 25	ja	□/■	•	•	–	–	–	–	–	–	•	•	•	–	–	39
	600 N VARIOFAN	60 x 60 x 25	ja	□/■	•	•	–	•	•	–	–	–	•	–	–	–	–	40
	600 J	60 x 60 x 32	ja	■	•	•	–	•	–	•	•	–	•	–	–	–	–	41
	700 F	70 x 70 x 15	ja	□	•	•	–	–	–	–	–	–	•	–	–	–	–	42
	8450	80 x 80 x 25	ja	□/■	•	•	•	•	•	•	•	–	•	–	–	–	–	43
	8400 N	80 x 80 x 25	ja	□/■	•	•	•	•	•	•	•	–	•	•	•	–	–	44
	8400 N VARIOFAN	80 x 80 x 25	ja	□	•	•	–	•	•	–	–	–	•	–	–	–	–	45
	8300	80 x 80 x 32	ja	■	•	•	•	•	•	•	•	–	•	•	•	•	–	46
S-Force	8200 J	80 x 80 x 38	ja	■	•	•	•	•	•	•	•	–	•	•	–	–	–	47
	3400 N	92 x 92 x 25	ja	□/■	•	•	•	•	•	•	•	–	•	•	•	–	–	48
	3400 N VARIOFAN	92 x 92 x 25	ja	□	•	•	–	•	•	–	–	–	•	–	–	–	–	49
	3300	92 x 92 x 32	ja	□/■	•	•	•	•	•	•	•	–	•	•	•	•	–	50
NEW	3300 N	92 x 92 x 38	ja	■	•	•	–	•	•	•	•	–	•	•	–	•	–	51
S-Force	3200 J	92 x 92 x 38	ja	■	•	•	•	•	•	•	•	–	•	•	•	–	–	52
NEW S-Panther	3250 J	92 x 92 x 38	ja	■	•	•	–	•	•	•	•	–	•	•	–	•	–	53
	4400 F	119 x 119 x 25	ja	□/■	•	•	•	•	•	•	•	–	•	–	–	–	–	54
	4400 FN	119 x 119 x 25	ja	■	•	•	•	•	•	•	•	–	•	–	–	–	–	55
	4300	119 x 119 x 32	ja	□/■	•	•	•	•	•	•	•	–	•	•	•	•	–	56
	4300 VARIOFAN	119 x 119 x 32	ja	■	•	•	•	•	•	•	•	–	•	–	–	–	–	57
	Subject to alternations																	

* approvals-applied for
– not yet available
• available
□ Sleeve bearings
■ Ball bearings

Please note that these special versions are not possible for all voltages and speeds, and not in all combinations. The special versions are designed for specific customers and projects. As a rule they are not available off the shelf and are tied to minimum volumes.

Please consult your customer support representative about the feasibility of your special variant.

Axial fans for DC operation

Overview of technically feasible designs

	Series	Dimensions	VDE, UL, CSA	Sintec sleeve bearings/ball bearings	Speed signal	Go / No-go alarm	Alarm with limit speed	External temperature sensor	Internal temperature sensor	PWM control input	Analogue control input	Multi-option control input	Humidity protection	IP >= IP 54	IP >= IP 68	Salt fog protection	Reversible direction of rotation	Page
	Axial fans																	
	Series	**mm**								**OPTIONAL**								**p.**
	4400	119 x 119 x 38	ja	■	•	•	•	•	•	•	•	–	•	•	–	–	–	58/59
	4100 N	119 x 119 x 38	ja	▫/■	•	•	•	•	•	•	•	–	•	•	•	•	–	60
S-Force	4100 NH..NH6	119 x 119 x 38	ja	■	•	•	•	•	•	•	•	–	•	•	•	•	–	61
S-Force	4100 NH7..NH8	119 x 119 x 38	ja	■	•	•	•	•	•	•	•	–	•	–	–	•	–	62
	DV 4100	119 x 119 x 38	ja	■	•	•	•	•	•	•	•	–	•	•	•	•	–	63
	5200 N	127 x 127 x 38	ja	■	•	•	•	•	•	•	•	–	•	•	•	•	–	64
	DV 5200	127 x 127 x 38	ja	■	•	•	•	•	•	•	•	–	•	•	–	•	–	65
	5100 N	135 x 135 x 38	ja	■	•	•	•	•	•	•	•	–	•	•	–	•	–	66
S-Force	5300	140 x 140 x 51	ja	■	•	•	•	•	•	•	•	–	•	•	–	•	–	67
S-Force	5300 TD	140 x 140 x 51	ja	■	•	•	•	•	•	•	•	•	•	•	–	•	–	68
	7100 N	Ø 150 x 38	ja	■	•	•	•	•	•	•	•	–	•	•	•	•	–	69
	7200 N	Ø 150 x 55	ja	■	•	•	•	•	•	•	•	–	•	•	•	•	–	70
	6100 N	172 x 160 x 51	ja	■	•	•	•	•	•	•	•	–	•	•	–	–	–	71
S-Force	6300	Ø 172 x 51	ja	■	•	•	•	•	•	•	•	–	•	•	–	•	–	72
S-Force	6300 TD	Ø 172 x 51	ja	■	•	•	•	•	•	•	•	•	•	•	–	•	–	73
S-Force	6300 TD	172 x 160 x 51	ja	■	•	•	•	•	•	•	•	•	•	•	–	•	–	74
NEW	DV 6300	172 x 160 x 51	ja	■	•	•	•	•	•	•	•	•	•	•	–	•	–	75
	6400	172 x 150 x 51	ja	■	•	•	•	•	•	•	•	–	•	•	–	•	–	76
	6400 TD Turbofan	172 x 150 x 51	ja	■	•	•	•	•	•	•	•	–	•	•	–	•	•	77
	DV 6400	172 x 160 x 51	ja	■	•	•	•	•	•	•	•	–	•	•	–	•	–	78
	DV 6400 TD	172 x 160 x 51	ja	■	•	•	•	•	•	•	•	–	•	•	–	•	•	79
	2200 FTD	Ø 200 x 51	ja	■	•	•	•	•	•	•	•	•	•	•	–	•	–	80
S-Force NEW	2200 TD	225 x 225 x 80	ja	■	•	•	•	•	•	•	•	•	•	•	–	–	–	81
	K1G 200	225 x 225 x 80	ja	■	•	•	•	•	–	•	•	•	•	–	–	•	–	82
	K3G 200	225 x 225 x 89	ja	■	•	•	•	•	–	•	•	•	•	–	–	•	–	83
	Subject to alternations																	

* approvals-applied for

– not yet available
• available

▫ Sleeve bearings
■ Ball bearings

Please note that these special versions are not possible for all voltages and speeds, and not in all combinations. The special versions are designed for specific customers and projects. As a rule they are not available off the shelf and are tied to minimum volumes.

Please consult your customer support representative about the feasibility of your special variant.

max. 4,6 m³/h

DC axial fans

Series 250 25 x 25 x 8 mm

- **Material:** Housing: GRP[1)] (PBT)
  Impeller: GRP[1)] (PA)
- **Direction of air flow:** Exhaust over struts
- **Direction of rotation:** Counter-clockwise, seen on rotor
- **Connection:** Via single wires AWG 28, TR 64
- **Mass:** 5 g

- **Possible special versions:**
  (See chapter DC fans - specials)
  - Speed signal
  - Protection against moisture

1) Fibreglass-reinforced plastic

Nominal data	Air flow	Air flow	Nominal voltage	Voltage range	Sound pressure level	Sound power level	Sintec sleeve bearings / Ball bearings	Input power	Nominal speed	Temperature range	Service life L_{10} (20 °C) ebm-papst Standard / Service life L_{10} (60 °C) ebm-papst Standard	Life expectancy L_{10IPC} (40 °C) see page 17	Curve
Type	**m³/h**	**CFM**	**VDC**	**VDC**	**dB(A)**	**Bel(A)**	□ / ■	**Watts**	**rpm**	**°C**	**Hours**	**Hours**	
255 M	2,3	1,2	**5**	4,5...5,5	5	< 3	□	0,2	6 500	-10...+70	45 000 / 17 500	47 500	①
255 N	3,5	1,9	**5**	4,5...5,5	16	< 3	□	0,4	9 600	-10...+70	40 000 / 15 000	42 500	②
255 H	4,6	2,6	**5**	4,5...5,5	23	4,4	□	0,6	12 000	-10...+55	35 000 / 15 000*	37 500	③
252 N	3,4	1,9	**12**	10...14	15	< 3	□	0,5	9 000	-10...+70	40 000 / 15 000	42 500	②
252 H	4,6	2,6	**12**	10...14	23	4,4	□	0,7	12 000	-10...+55	35 000 / 15 000*	37 500	③

Subject to alternations

* at 55 °C

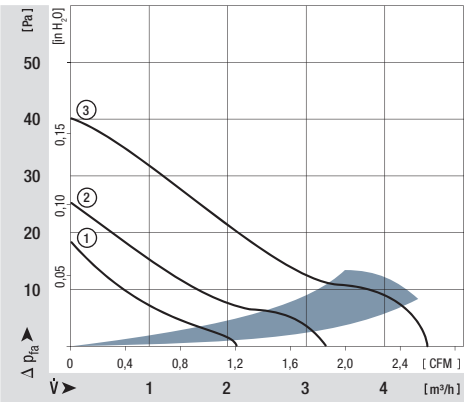

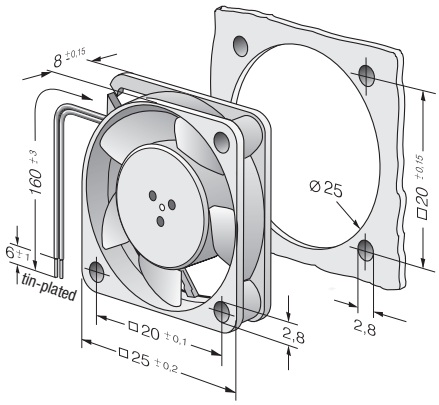

max. 9 m³/h

DC axial fans

Series 400 F 40 x 40 x 10 mm

- **Material:** Housing: GRP[1)] (PBT)
  Impeller: GRP[1)] (PA)
- **Direction of air flow:** Exhaust over struts
- **Direction of rotation:** Counter-clockwise, seen on rotor
- **Connection:** Via single wires AWG 28, TR 64
- **Highlights:** Some models are suitable for use at high ambient temperatures
- **Mass:** 17 g

- **Possible special versions:**
  (See chapter DC fans - specials)
  - Speed signal
  - Go / No-go alarm
  - Protection against moisture

1) Fibreglass-reinforced plastic

Nominal data	Air flow	Air flow	Nominal voltage	Voltage range	Sound pressure level	Sound power level	Sintec sleeve bearings / Ball bearings	Input power	Nominal speed	Temperature range	Service life L_{10} (20 °C) ebm-papst Standard / Service life L_{10} (60 °C) ebm-papst Standard	Life expectancy L_{10IPC} (40 °C) see page 17	Curve
Type	**m³/h**	**CFM**	**VDC**	**VDC**	**dB(A)**	**Bel(A)**	□/■	**Watts**	**rpm**	**°C**	**Hours**	**Hours**	
405 F	8	4,7	**5**	4,5...5,5	22,1	4,4	□	0,7	5 400	-20...+70	45 000 / 17 500	47 500	②
405 FH	9	5,3	**5**	4,5...5,5	26,0	4,6	□	0,9	6 000	-20...+70	45 000 / 17 500	47 500	③
412 FM	6	3,5	**12**	10...14	17,0	3,8	□	0,5	4 300	-20...+70	45 000 / 17 500	47 500	①
412 F	8	4,7	**12**	10...14	22,1	4,4	□	0,7	5 400	-20...+70	45 000 / 17 500	47 500	②
412 FH	9	5,3	**12**	10...14	26,0	4,6	□	0,8	6 000	-20...+70	45 000 / 17 500	47 500	③
414 F	8	4,7	**24**	20...28	22,1	4,4	□	0,8	5 400	-20...+70	45 000 / 17 500	47 500	②
414 FH	9	5,3	**24**	21,6...26,4	26,0	4,4	□	0,9	6 000	-20...+70	45 000 / 17 500	47 500	③
Model with temperature range up to +85 °C.													
412 FM-074	6	3,5	**12**	10...14	17,0	3,8	□	0,4	4 300	-20...+85	45 000 / 17 500	47 500	①
412 F-130	8	4,7	**12**	10...14	22,1	4,4	□	0,6	5 400	-20...+85	45 000 / 17 500	47 500	②
412 FH-132	9	5,3	**12**	10...14	26,0	4,6	□	0,8	6 000	-20...+85	45 000 / 17 500	47 500	③

Subject to alternations

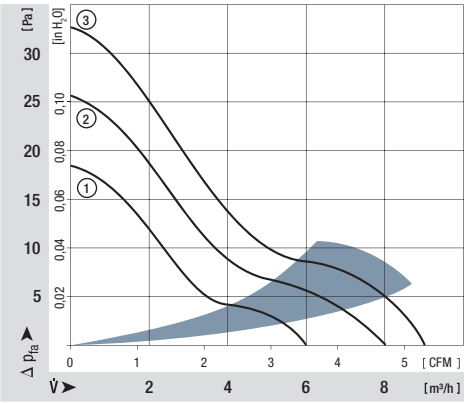

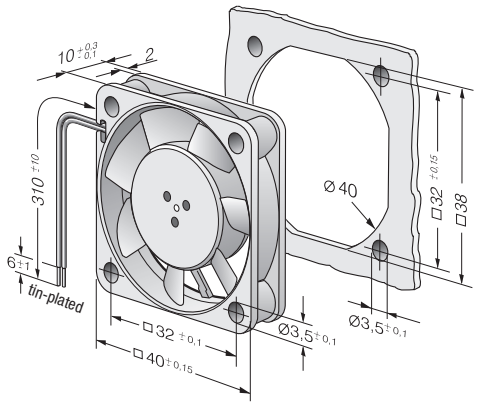

Guard grilles
from p. 238

ebmpapst

max. 13,5 m³/h

DC axial fans

Series 400 40 x 40 x 20 mm

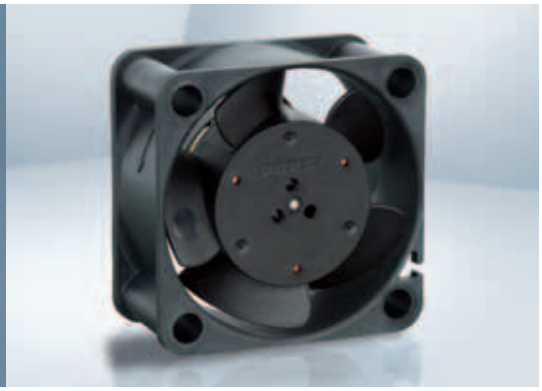

- **Material:** Housing: GRP[1)] (PBT)
  Impeller: GRP[1)] (PA)
- **Direction of air flow:** Exhaust over struts
- **Direction of rotation:** Counter-clockwise, seen on rotor
- **Connection:** Via single wires AWG 28, TR 64
- **Highlights:** Some models are suitable for use at high ambient temperatures
- **Mass:** 27 g

- **Possible special versions:**
  (See chapter DC fans - specials)
  - Speed signal
  - Go / No-go alarm
  - PWM control input
  - Protection against moisture

1) Fibreglass-reinforced plastic

Nominal data	Air flow	Air flow	Nominal voltage	Voltage range	Sound pressure level	Sound power level	Sintec sleeve bearings Ball bearings	Input power	Nominal speed	Temperature range	Service life L_{10} (20 °C) ebm-papst Standard / Service life L_{10} (60 °C) ebm-papst Standard	Life expectancy L_{10IPC} (40 °C) see page 17	Curve
Type	**m³/h**	**CFM**	**VDC**	**VDC**	**dB(A)**	**Bel(A)**	□ / ■	**Watts**	**rpm**	**°C**	**Hours**	**Hours**	
405	10,0	5,9	**5**	4,5...5,5	18	3,8	■	0,9	6 000	-20...+70	50 000 / 20 000	52 500	①
412	10,0	5,9	**12**	10...14	18	3,8	■	0,8	6 000	-20...+70	50 000 / 20 000	52 500	①
412 H	13,5	7,9	**12**	10...14	29	4,7	■	1,6	8 100	-20...+60	45 000 / 17 500	47 500	②
414	10,0	5,9	**24**	20...28	18	3,8	■	1,0	6 000	-20...+70	50 000 / 20 000	52 500	①
414 H	13,5	7,9	**24**	20...26,5	29	4,7	■	1,7	8 100	-20...+60	45 000 / 17 500	47 500	②
Model with temperature range up to +85 °C.													
412-099	10,0	5,9	**12**	10...14	18	3,8	■	0,8	6 000	-20...+85	50 000 / 20 000	52 500	①

Subject to alternations

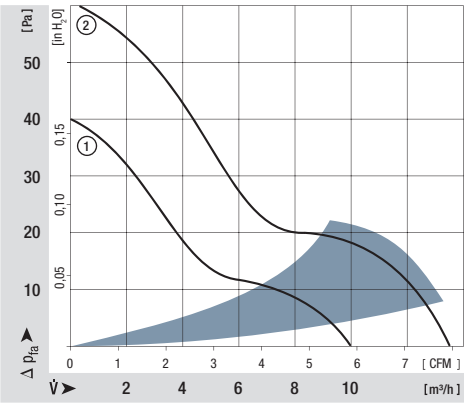

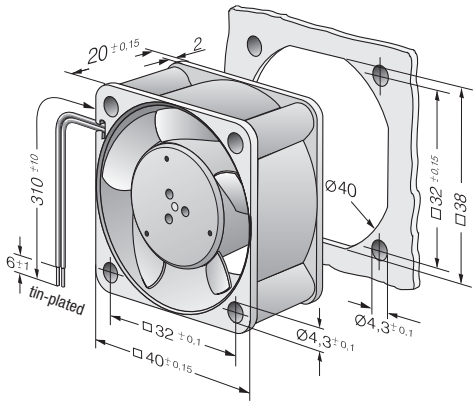

max. 38 m³/h

DC axial fans

Series 420 J 40 x 40 x 28 mm

- **Material:** Housing: GRP[1)] (PBT)
  Impeller: GRP[1)] (PA)
- **Direction of air flow:** Exhaust over struts
- **Direction of rotation:** Counter-clockwise, seen on rotor
- **Connection:** Via single wires AWG 28, UL 1061
- **Mass:** 45 g

- **Possible special versions:**
  (See chapter DC fans - specials)
  - Speed signal
  - Go / No-go alarm
  - External temperature sensor
  - PWM control input
  - Protection against moisture
  - Protection against salt fog

1) Fibreglass-reinforced plastic

Nominal data	Air flow	Air flow	**Nominal voltage**	Voltage range	Sound pressure level	Sound power level	Sintec sleeve bearings / Ball bearings	Input power	Nominal speed	Temperature range	Service life L_{10} (20 °C) ebm-papst Standard / Service life L_{10} (60 °C) ebm-papst Standard	Life expectancy L_{10IPC} (40 °C) see page 17	Curve
Type	**m³/h**	**CFM**	**VDC**	**VDC**	**dB(A)**	**Bel(A)**	□/■	**Watts**	**rpm**	**°C**	**Hours**	**Hours**	
422 JM	24	14,2	**12**	8...13,8	42	5,5	■	2,5	11 100	-20...+70	75 000 / 37 500	127 500	①
422 JN	31	18,3	**12**	8...13,8	48	6,0	■	4,0	14 000	-20...+70	67 500 / 35 000	115 000	②
422 JH	38	22,4	**12**	8...13,8	54	6,6	■	6,8	17 200	-20...+70	60 000 / 30 000	102 500	③
424 JM	24	14,2	**24**	16...28	42	5,5	■	2,7	11 100	-20...+70	75 000 / 37 500	127 500	①
424 JN	31	18,3	**24**	16...28	48	6,0	■	4,2	14 000	-20...+70	67 500 / 35 000	115 000	②
424 JH	38	22,4	**24**	16...26,4	54	6,6	■	7,1	17 200	-20...+65	60 000 / 32 500	102 500	③

Subject to alternations

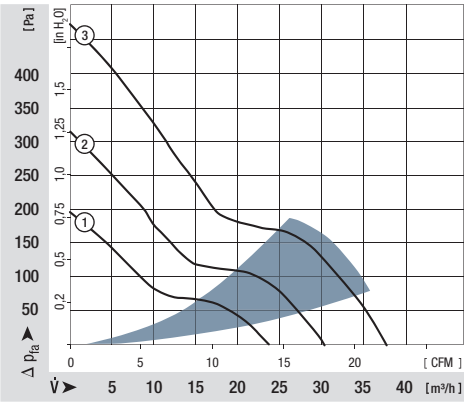

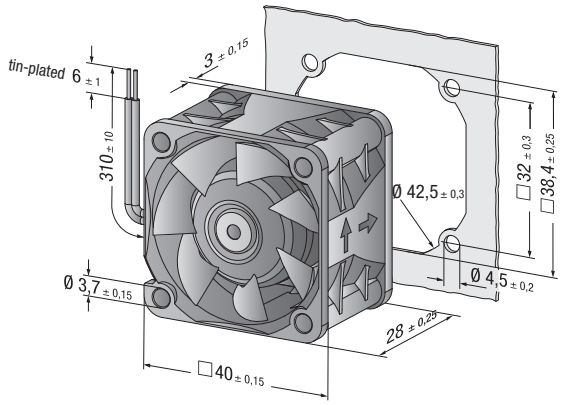

Guard grilles
from p. 238

ebmpapst

max. 20 m³/h

DC axial fans

Series 500 F 50 x 50 x 15 mm

- **Material:** Housing: GRP[1)] (PBT)
  Impeller: GRP[1)] (PA)
- **Direction of air flow:** Exhaust over struts
- **Direction of rotation:** Counter-clockwise, seen on rotor
- **Connection:** Via single wires AWG 28, TR 64
- **Highlights:** Some models are suitable for use at high ambient temperatures
- **Mass:** 27 g

- **Possible special versions:**
  (See chapter DC fans - specials)
  - Speed signal
  - Go / No-go alarm
  - PWM control input
  - Protection against moisture

1) Fibreglass-reinforced plastic

Nominal data	Air flow	Air flow	Nominal voltage	Voltage range	Sound pressure level	Sound power level	Sintec sleeve bearings Ball bearings	Input power	Nominal speed	Temperature range	Service life L_{10} (20 °C) ebm-papst Standard / Service life L_{10} (60 °C) ebm-papst Standard	Life expectancy L_{10IPC} (40 °C) see page 17	Curve
Type	**m³/h**	**CFM**	**VDC**	**VDC**	**dB(A)**	**Bel(A)**	□ / ■	**Watts**	**rpm**	**°C**	**Hours**	**Hours**	
512 F	20	11,8	**12**	10,8...13,2	30	4,5	□	0,8	5 000	-20...+70	50 000 / 20 000	52 500	②
514 F	20	11,8	**24**	21,6...26,4	30	4,5	□	0,9	5 000	-20...+70	50 000 / 20 000	52 500	②
Model with temperature range up to +85 °C.													
512 FL-547	11	6,5	**12**	10,2...13,8	18	3,7	□	0,4	3 000	-20...+85	50 000 / 20 000	52 500	①
512 F-532	20	11,8	**12**	10,8...13,2	30	4,5	□	0,9	5 000	-20...+85	50 000 / 20 000	52 500	②

Subject to alternations

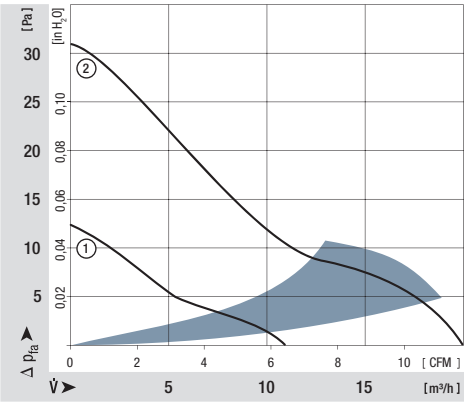

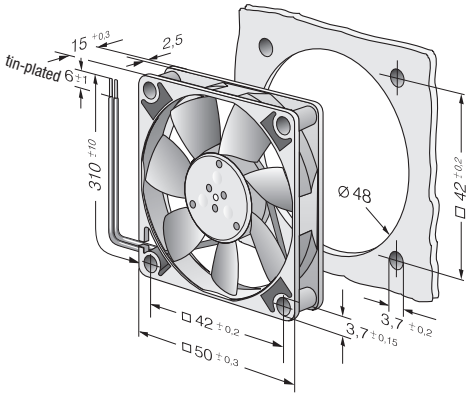

max. 33 m³/h

DC axial fans

Series 600 F 60 x 60 x 15 mm

- **Material:** Housing: GRP[1)] (PBT)
  Impeller: GRP[1)] (PA)
- **Direction of air flow:** Exhaust over struts
- **Direction of rotation:** Counter-clockwise, seen on rotor
- **Connection:** Via single wires AWG 28, TR 64
- **Highlights:** Some models are suitable for use at high ambient temperatures
- **Mass:** 30 g

- **Possible special versions:**
  (See chapter DC fans - specials)
  - Speed signal
  - Go / No-go alarm
  - PWM control input
  - Protection against moisture

1) Fibreglass-reinforced plastic

Nominal data	Air flow	Air flow	Nominal voltage	Voltage range	Sound pressure level	Sound power level	Sintec sleeve bearings / Ball bearings	Input power	Nominal speed	Temperature range	Service life L_{10} (20 °C) ebm-papst Standard / Service life L_{10} (60 °C) ebm-papst Standard	Life expectancy L_{10IPC} (40 °C) see page 17	Curve
Type	**m³/h**	**CFM**	**VDC**	**VDC**	**dB(A)**	**Bel(A)**	□/■	**Watts**	**rpm**	**°C**	**Hours**	**Hours**	
605 F	29	17,1	**5**	4,5...5,2	27	4,4	□	1,1	4 000	-20...+50	50 000 / 20 000	52 500	②
612 FL	19	11,2	**12**	11,5...13,2	16	3,6	□	0,4	2 650	-20...+70	50 000 / 20 000	52 500	①
612 F	29	17,1	**12**	10,8...13,2	27	4,4	□	1,0	3 900	-20...+70	50 000 / 20 000	52 500	②
612 FH	33	19,4	**12**	10,0...13,2	31	4,8	□	1,5	4 500	-20...+60	45 000 / 17 500	47 500	③
614 F	29	17,1	**24**	21,6...26,4	27	4,4	□	1,1	3 900	-20...+70	50 000 / 20 000	52 500	②
614 F/39 H-691	33	19,4	**24**	16...28	31	4,8	□	1,4	4 500	-20...+60	45 000 / 17 500	47 500	③
Model with temperature range up to +80 / 85 °C.													
612 FL-680	19	11,2	**12**	11,5...14	16	3,6	□	0,5	2 650	-20...+85	50 000 / 20 000	52 500	①
612 F-637	29	17,1	**12**	10,8...12,6	27	4,4	□	1,0	3 900	-20...+80	50 000 / 20 000	52 500	②

Subject to alternations

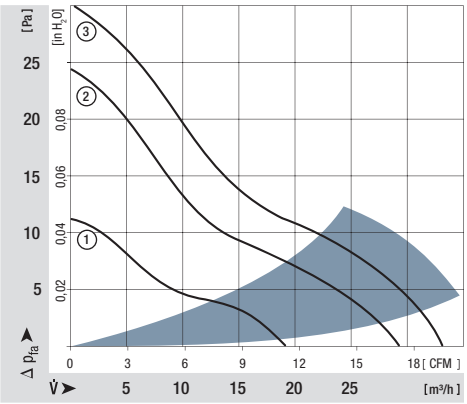

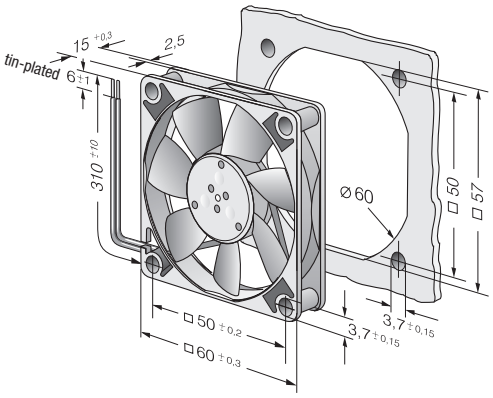

Guard grilles
from p. 238

ebmpapst

max. 67 m³/h

DC axial fans

Series 620 60 x 60 x 25 mm

- **Material:** Housing: GRP[1)] (PBT)
  Impeller: GRP[1)] (PA)
- **Direction of air flow:** Exhaust over struts
- **Direction of rotation:** Clockwise, seen on rotor
- **Connection:** Via single wires AWG 22, TR 64
- **Highlights:** Very low-noise motor
- **Mass:** 85 g

- **Possible special versions:**
  (See chapter DC fans - specials)
  - Speed signal
  - Go / No-go alarm
  - Alarm with limit speed
  - External temperature sensor
  - Internal temperature sensor
  - PWM control input
  - Analogue control input
  - Protection against moisture

1) Fibreglass-reinforced plastic

Nominal data	Air flow	Air flow	Nominal voltage	Voltage range	Sound pressure level	Sound power level	Sintec sleeve bearings / Ball bearings	Input power	Nominal speed	Temperature range	Service life L_{10} (40 °C) ebm-papst Standard / Service life L_{10} (T_{max}) ebm-papst Standard	Life expectancy L_{10IPC} (40 °C) see page 17	Curve
Type	**m³/h**	**CFM**	**VDC**	**VDC**	**dB(A)**	**Bel(A)**	□ / ■	**Watts**	**rpm**	**°C**	**Hours**	**Hours**	
622 L	21	12,4	**12**	8...15	20	3,7	■	0,5	3 200	-20...+85	80 000 / 20 000	135 000	①
622 M	30	17,7	**12**	8...15	29	4,3	■	1,0	4 550	-20...+75	77 500 / 30 000	127 500	②
622 N	40	23,5	**12**	8...15	35	4,7	■	1,9	6 100	-20...+70	72 500 / 35 000	117 500	③
622 H	46	27,1	**12**	8...15	39	5,1	■	2,3	6 850	-20...+70	70 000 / 35 000	117 500	④
622 HH	56	33,0	**12**	8...15	43	5,6	■	3,5	8 200	-20...+70	65 000 / 32 500	110 000	⑤
622/2 H3P	67	39,4	**12**	8...13,2	48	5,9	■	8,0	9 700	-20...+60	52 500 / 32 500	87 500	⑥
624 L	21	12,4	**24**	18...28	20	3,7	■	1,0	3 200	-20...+70	80 000 / 40 000	135 000	①
624 M	30	17,7	**24**	12...28	29	4,3	■	1,5	4 550	-20...+70	77 500 / 37 500	130 000	②
624 N	40	23,5	**24**	12...28	35	4,7	■	2,2	6 100	-20...+70	72 500 / 35 000	117 500	③
624 H	46	27,1	**24**	18...28	39	5,1	■	2,4	6 850	-20...+70	70 000 / 35 000	117 500	④
624 HH	56	33,0	**24**	18...28	43	5,6	■	3,6	8 200	-20...+70	65 000 / 32 500	110 000	⑤
624/2 H3P	67	39,4	**24**	18...28	48	5,9	■	7,0	9 700	-20...+60	52 500 / 32 500	87 500	⑥
628 HH	56	33,0	**48**	36...60	43	5,6	■	4,2	8 200	-20...+70	65 000 / 32 500	110 000	⑤

Subject to alternations

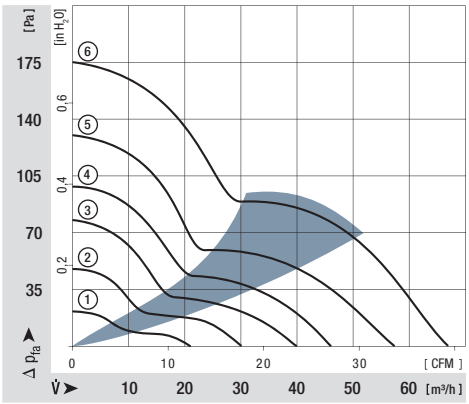

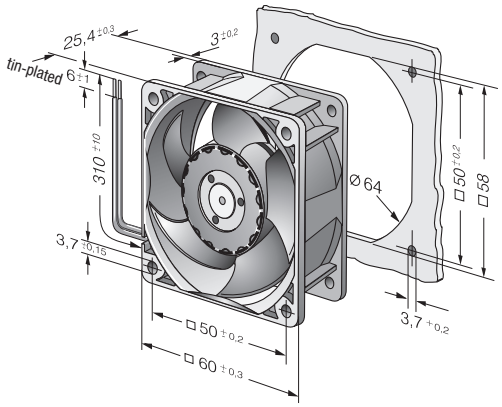

max. 44 m³/h

DC axial fans

Series 630 60 x 60 x 25 mm

- **Material:** Housing: GRP[1)] (PBT)
  Impeller: GRP[1)] (PA)
- **Direction of air flow:** Exhaust over struts
- **Direction of rotation:** Clockwise, seen on rotor
- **Connection:** Via single wires AWG 22, TR 64
- **Highlights:** Developed for applications with demanding environmental requirements
- **Mass:** 70 g

- **Possible special versions:**
  (See chapter DC fans - specials)
  - Speed signal
  - Go / No-go alarm
  - Alarm with limit speed
  - External temperature sensor
  - PWM control input
  - Analogue control input
  - Protection against moisture
  - Protection against salt fog
  - Type of protection: IP 54 / IP 68

1) Fibreglass-reinforced plastic

Nominal data	Air flow	Air flow	**Nominal voltage**	Voltage range	Sound pressure level	Sound power level	Sintec sleeve bearings / Ball bearings	Input power	Nominal speed	Temperature range	Service life L_{10} (40 °C) ebm-papst Standard / Service life L_{10} (T_{max}) ebm-papst Standard	Life expectancy L_{10IPC} (40 °C) see page 17	Curve
Type	**m³/h**	**CFM**	**VDC**	**VDC**	**dB(A)**	**Bel(A)**	□/■	**Watts**	**rpm**	**°C**	**Hours**	**Hours**	
632 NU	40	23,5	**12**	6...15	33	5,2	■	1,8	5 900	-20...+70	85 000 / 42 500	142 500	①
632/2 HPU	44	25,9	**12**	10,8...13,2	35	5,4	■	1,5	6 300	-20...+70	85 000 / 42 500	142 500	②
634 NU	40	23,5	**24**	12...30	34	5,1	■	1,6	5 900	-20...+70	85 000 / 42 500	142 500	①
638/2 HPU	44	25,9	**48**	40...60	35	5,4	■	1,8	6 300	-20...+70	85 000 / 42 500	142 500	②

Subject to alternations

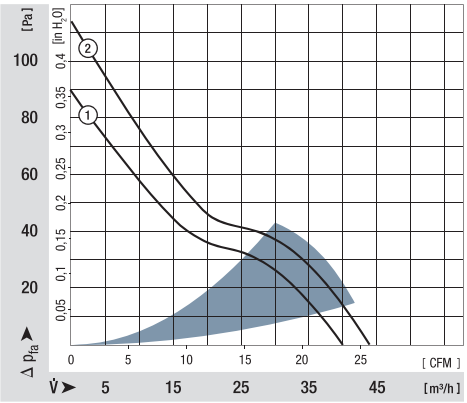

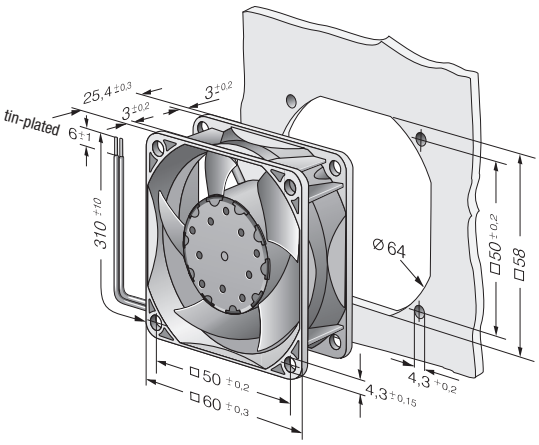

Guard grilles
from p. 238

ebmpapst

max. 56 m³/h

DC axial fans

Series 600 N 60 x 60 x 25 mm

- **Material:** Housing: GRP[1)] (PBT)
  Impeller: GRP[1)] (PA)
- **Direction of air flow:** Exhaust over struts
- **Direction of rotation:** Clockwise, seen on rotor
- **Connection:** Via single wires AWG 22, TR 64
- **Highlights:** Some models are suitable for use at high ambient temperatures until 85 °C
- **Mass:** 66 g

- **Possible special versions:**
  (See chapter DC fans - specials)
  - Speed signal
  - Go / No-go alarm
  - Protection against moisture
  - Type of protection: IP 54 / IP 68

1) Fibreglass-reinforced plastic

Nominal data	Air flow	Air flow	Nominal voltage	Voltage range	Sound pressure level	Sound power level	Sintec sleeve bearings / Ball bearings	Input power	Nominal speed	Temperature range	Service life L_{10} (40 °C) ebm-papst Standard / Service life L_{10} (T_{max}) ebm-papst Standard	Life expectancy L_{10IPC} (40 °C) see page 17	Curve
Type	m³/h	CFM	VDC	VDC	dB(A)	Bel(A)	□ / ■	Watts	rpm	°C	Hours	Hours	
612 NGLE	21	12,4	**12**	8...15	16	3,6	□	0,6	2 500	-20...+85	80 000 / 27 500	135 000	①
612 NLE	21	12,4	**12**	8...15	16	3,6	■	0,4	2 500	-20...+85	80 000 / 27 500	135 000	①
612 NGMLE	25	14,7	**12**	8...15	19	3,9	□	0,7	3 000	-20...+80	80 000 / 32 500	135 000	②
612 NMLE	25	14,7	**12**	8...15	19	3,9	■	0,4	3 000	-20...+85	80 000 / 27 500	135 000	②
612 NGME	35	20,6	**12**	8...15	28	4,6	□	1,2	4 100	-20...+75	80 000 / 35 000	135 000	③
612 NME	35	20,6	**12**	8...15	28	4,6	■	0,8	4 100	-20...+75	80 000 / 35 000	135 000	③
612 NN	42	24,7	**12**	8...15	35	5,0	■	1,5	5 100	-20...+70	70 000 / 35 000	117 500	④
612 NH	43	25,3	**12**	8...15	37	5,3	■	1,8	5 600	-20...+70	70 000 / 35 000	117 500	⑤
612 NHH-118	56	33,0	**12**	8...15	41	5,7	■	2,9	6 800	-20...+70	60 000 / 30 000	102 500	⑥
614 NGL	21	12,4	**24**	18...28	16	3,6	□	1,0	2 500	-20...+70	80 000 / 40 000	135 000	①
614 NL	21	12,4	**24**	18...28	16	3,6	■	0,8	2 500	-20...+70	80 000 / 40 000	135 000	①
614 NGML	25	14,7	**24**	18...28	19	3,9	□	1,2	3 000	-20...+70	80 000 / 40 000	135 000	②
614 NML	25	14,7	**24**	18...28	19	3,9	■	1,0	3 000	-20...+70	80 000 / 40 000	135 000	②
614 NGM	35	20,6	**24**	18...28	28	4,6	□	1,7	4 100	-20...+70	80 000 / 40 000	135 000	③
614 NM	35	20,6	**24**	18...28	28	4,6	■	1,3	4 100	-20...+70	80 000 / 40 000	135 000	③
614 NN	42	24,7	**24**	18...28	35	5,0	■	1,8	5 100	-20...+70	70 000 / 35 000	117 500	④
614 NH	43	25,3	**24**	18...26	37	5,3	■	2,1	5 600	-20...+70	70 000 / 35 000	117 500	⑤
614 NHH	56	33,0	**24**	18...26	41	5,7	■	2,9	6 850	-20...+70	60 000 / 30 000	102 500	⑥
614 NHH-119	56	33,0	**24**	18...28	41	5,7	■	2,9	6 850	-20...+70	60 000 / 30 000	102 500	⑥
618 NM	35	20,6	**48**	36...56	28	4,6	■	1,9	4 100	-20...+70	80 000 / 40 000	135 000	③
618 NN	42	24,7	**48**	36...56	35	5,0	■	2,1	5 100	-20...+65	70 000 / 40 000	117 500	④

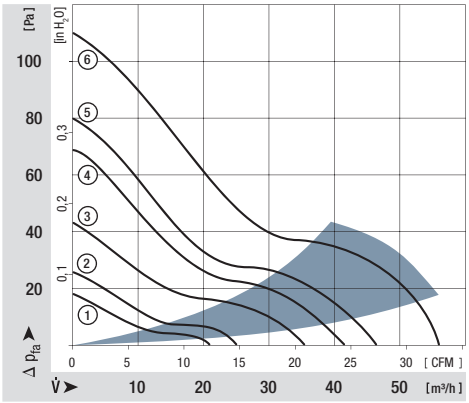

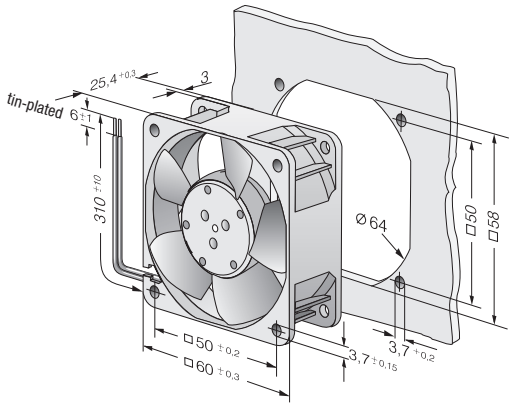

max. 41 m³/h

DC axial fans

Series 600 N VARIOFAN 60 x 60 x 25 mm

- **Material:** Housing: GRP[1)] (PBT)
  Impeller: GRP[1)] (PA)
- **Direction of air flow:** Exhaust over struts
- **Direction of rotation:** Clockwise, seen on rotor
- **Connection:** Via single wires AWG 22, TR 64
- **Highlights:** Automatic speed adjustment with temperature sensor
- **Mass:** 66 g

- **Possible special versions:**
  (See chapter DC fans - specials)
  - Speed signal
  - Go / No-go alarm
  - External temperature sensor
  - Internal temperature sensor
  - Protection against moisture

1) Fibreglass-reinforced plastic

	Nominal data	Air flow	Air flow	Nominal voltage	Voltage range	Sound pressure level	Sound power level	Sintec sleeve bearings / Ball bearings	Input power	Nominal speed	Temperature range	Service life L_{10} (40 °C) ebm-papst Standard	Service life L_{10} (T_{max}) ebm-papst Standard	Life expectancy L_{10IPC} (40 °C) see page 17	Curve
	Type	m³/h	CFM	VDC	VDC	dB(A)	Bel(A)	□/■	Watts	rpm	°C	Hours		Hours	
30°C ▼ 55°C	612 NGMI	18	10,6	12	8...12,6	14	3,5	□	1,3	2 150	-20...+65	80 000 / 45 000		135 000	①
		35	20,6			28	4,6		1,7	4 100					②
30°C ▼ 55°C	612 NMI	16	9,4	12	8...12,6	16	3,6	■	1,0	2 400	-20...+65	80 000 / 45 000		135 000	③
		35	20,6			28	4,6		1,4	4 100					④
30°C ▼ 55°C	612 NGNI	23	13,5	12	8...12,6	18	3,8	□	1,7	2 900	-20...+65	70 000 / 40 000		117 500	⑤
		41	24,1			35	5,0		2,4	5 100					⑥
30°C ▼ 55°C	612 NNI	23	13,5	12	8...12,6	18	3,8	■	1,2	2 900	-20...+65	70 000 / 40 000		117 500	⑤
		41	24,1			35	5,0		1,5	5 100					⑥
30°C ▼ 55°C	612 NGNV	23	13,5	12	8...12,6	18	3,8	□	1,7	2 900	-20...+65	70 000 / 40 000		117 500	⑤
		41	24,1			35	5,0		2,4	5 100					⑥

Subject to alternations

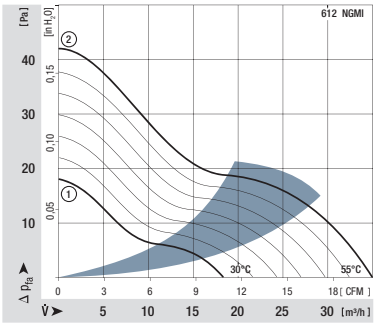

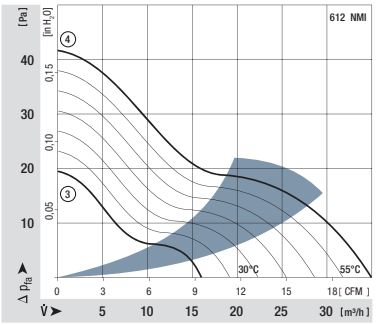

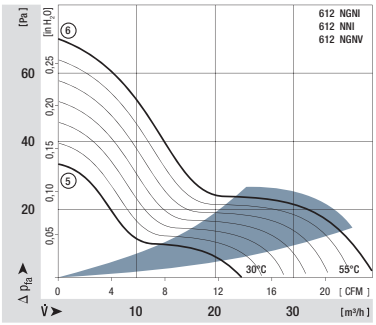

V-Types

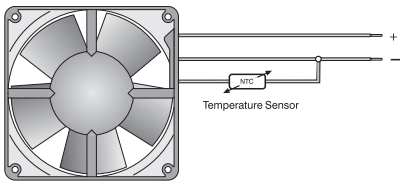

The temperature sensor for controlling the motor speed is not included in delivery.
Temperature sensor LZ 370 see accessories.

I-Types

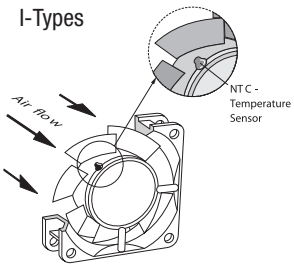

Temperature sensor (NTC-resistor) for controlling the motor speed is positioned directly in the air flow.

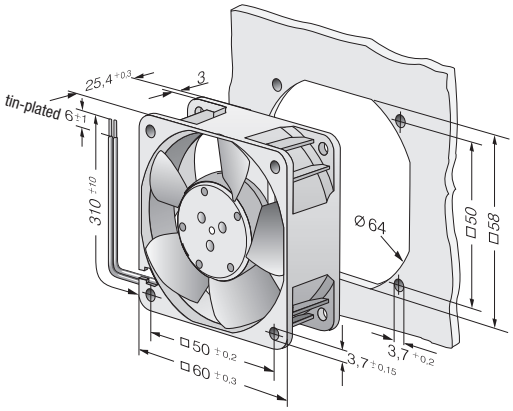

Guard grilles from p. 238

ebmpapst

max. 82 m³/h

DC axial fans

Series 600 J 60 x 60 x 32 mm

- **Material:** Housing: GRP[1)] (PBT)
  Impeller: GRP[1)] (PA)
- **Direction of air flow:** Exhaust over struts
- **Direction of rotation:** Clockwise, seen on rotor
- **Connection:** Via single wires AWG 24, TR 64
- **Mass:** 100 g

- **Possible special versions:**
  (See chapter DC fans - specials)
  - Speed signal
  - Go / No-go alarm
  - Alarm with limit speed
  - External temperature sensor
  - PWM control input
  - Analogue control input
  - Protection against moisture

1) Fibreglass-reinforced plastic

Nominal data	Air flow	Air flow	Nominal voltage	Voltage range	Sound pressure level	Sound power level	Sintec sleeve bearings / Ball bearings	Input power	Nominal speed	Temperature range	Service life L_{10} (40 °C) ebm-papst Standard / Service life L_{10} (T_{max}) ebm-papst Standard	Life expectancy L_{10IPC} (40 °C) see page 17	Curve
Type	**m³/h**	**CFM**	**VDC**	**VDC**	**dB(A)**	**Bel(A)**	□ / ■	**Watts**	**rpm**	**°C**	**Hours**	**Hours**	
612 JH	70	41,1	**12**	7...13,6	53	6,4	■	7,7	11 700	-20...+70	57 500 / 27 500	97 500	①
614 JH	70	41,1	**24**	14...26,4	53	6,4	■	7,7	11 700	-20...+70	57 500 / 27 500	97 500	①
618 JH	70	41,1	**48**	36...56	53	6,4	■	7,7	11 700	-20...+70	57 500 / 27 500	97 500	①
Fan types with streamer and integrated guard grille.													
614 J/2 HHP	82	48,3	**24**	18...30	62	7,6	■	14,6	15 000	-20...+75	65 000 / 25 000	110 000	②
618 J/2 HHP	82	48,3	**48**	38...58	62	7,6	■	14,6	15 000	-20...+75	65 000 / 25 000	110 000	②

Subject to alternations

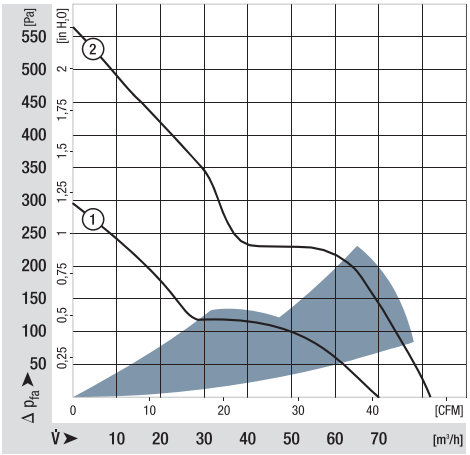

Rear view of types 614 J/2HHP and 618 J/2HHP

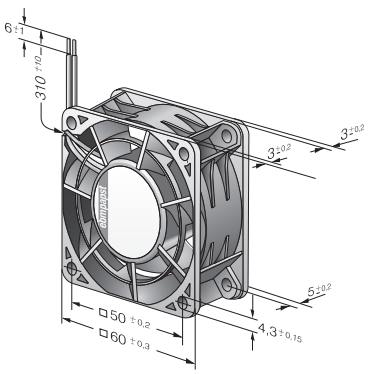

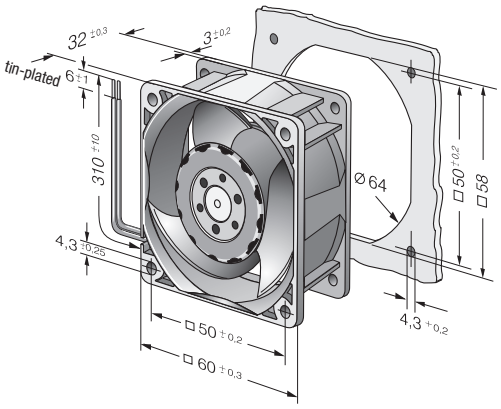

max. 44 m³/h

DC axial fans

Series 700 F 70 x 70 x 15 mm

- **Material:** Housing: GRP[1)] (PBT)
  Impeller: GRP[1)] (PA)
- **Direction of air flow:** Exhaust over struts
- **Direction of rotation:** Counter-clockwise, seen on rotor
- **Connection:** Via single wires AWG 24 to AWG 28, TR 64
- **Mass:** 53 g

- **Possible special versions:**
  (See chapter DC fans - specials)
  - Speed signal
  - Go / No-go alarm
  - Protection against moisture

1) Fibreglass-reinforced plastic

Nominal data	Air flow	Air flow	**Nominal voltage**	Voltage range	Sound pressure level	Sound power level	Sintec sleeve bearings / Ball bearings	Input power	Nominal speed	Temperature range	Service life L_{10} (40 °C) ebm-papst Standard / Service life L_{10} (T_{max}) ebm-papst Standard	Life expectancy L_{10IPC} (40 °C) see page 17	Curve
Type	**m³/h**	**CFM**	**VDC**	**VDC**	**dB(A)**	**Bel(A)**	□/■	**Watts**	**rpm**	**°C**	**Hours**	**Hours**	
712 F/2L-005*	28	16,5	**12**	8...13,8	25	4,7	■	0,6	3 300	-20...+70	60 000 / 30 000	102 500	①
712 F/2M-006*	36	21,2	**12**	8...13,8	32	5,0	■	1,1	4 300	-20...+70	60 000 / 30 000	102 500	②
712 F	44	25,9	**12**	8...13,8	38	5,3	■	1,7	5 300	-20...+70	60 000 / 30 000	102 500	③
714 F	44	25,9	**24**	18...28	38	5,3	■	1,5	5 300	-20...+70	60 000 / 30 000	102 500	③

Subject to alternations

*Version with 3-pin

Molex plug housing	22-01-2035
Molex Contacts	08-50-0113

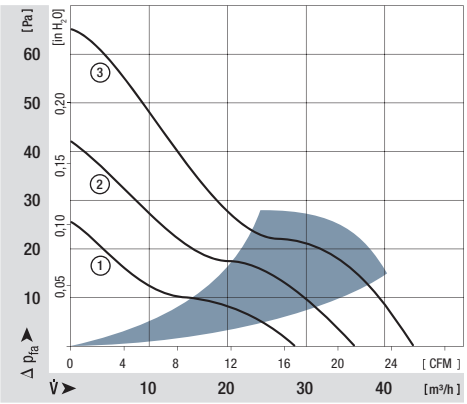

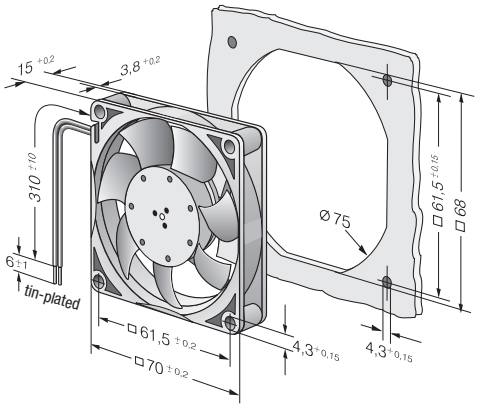

Guard grilles
from p. 238

ebmpapst

max. 117 m³/h

DC axial fans

Series 8450 80 x 80 x 25 mm

- **Material:** Housing: GRP[1)] (PBT)
  Impeller: GRP[1)] (PA)
- **Direction of air flow:** Exhaust over struts
- **Direction of rotation:** Counter-clockwise, seen on rotor
- **Connection:** Via single wires AWG 24, TR 64
- **Highlights:** Very low-noise motor
- **Mass:** 105 g

- **Possible special versions:**
  (See chapter DC fans - specials)
  - Speed signal
  - Go / No-go alarm
  - Alarm with limit speed
  - External temperature sensor
  - Internal temperature sensor
  - PWM control input
  - Analogue control input
  - Protection against moisture

1) Fibreglass-reinforced plastic

Nominal data	Air flow	Air flow	Nominal voltage	Voltage range	Sound pressure level	Sound power level	Sintec sleeve bearings / Ball bearings	Input power	Nominal speed	Temperature range	Service life L_{10} (40 °C) ebm-papst Standard / Service life L_{10} (T_{max}) ebm-papst Standard	Life expectancy L_{10IPC} (40 °C) see page 17	Curve
Type	**m³/h**	**CFM**	**VDC**	**VDC**	**dB(A)**	**Bel(A)**	□ / ■	**Watts**	**rpm**	**°C**	**Hours**	**Hours**	
8452 GL	32	18,8	**12**	8...15	14	3,3	□	0,4	1 700	-20...75	80 000 / 35 000	135 000	①
8452 GM	58	34,1	**12**	8...15	32	4,7	□	1,3	3 100	-20...75	80 000 / 35 000	135 000	②
8452 GN	68	40,0	**12**	8...15	36	5,0	□	1,8	3 600	-20...70	70 000 / 35 000	117 500	③
Models with 25 kHz PWM control and speed signal to 4-wire specification (see page 175).													
8452/2 GHP	75	44,1	**12**	10,8...13,2	38	5,3	□	2,5	4 000	-20...70	70 000 / 35 000	117 500	④
8452/2 GHHP	83	48,8	**12**	10,8...13,2	42	5,5	□	3,5	4 400	-20...60	65 000 / 40 000	110 000	⑤
Models with 1-30 kHz PWM control and speed signal.													
8452/2 H4P	117	68,8	**12**	8...15	50	6,4	■	6,8	6 200	-20...70	60 000 / 30 000	102 500	⑥
8454/2 H4P	117	68,8	**24**	20,0...26,4	50	6,4	■	6,8	6 200	-20...70	60 000 / 30 000	102 500	⑥

Subject to alternations

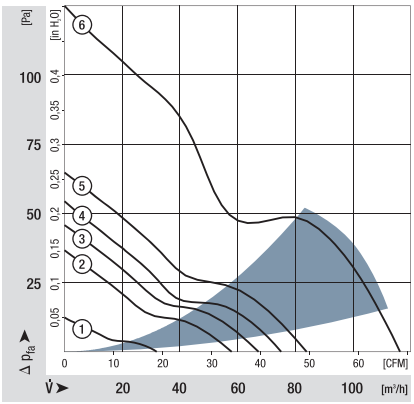

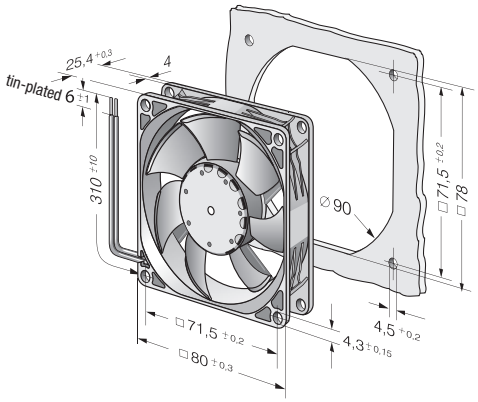

max. 79 m³/h

DC axial fans

Series 8400 N 80 x 80 x 25 mm

- **Material:** Housing: GRP[1)] (PBT)
  Impeller: GRP[1)] (PA)
- **Direction of air flow:** Exhaust over struts
- **Direction of rotation:** Counter-clockwise, seen on rotor
- **Connection:** Via single wires AWG 24, TR 64
- **Highlights:** Some models are suitable for use at high ambient temperatures until 85 °C
- **Mass:** 95 g

- **Possible special versions:**
  (See chapter DC fans - specials)
  - Speed signal
  - Go / No-go alarm
  - Alarm with limit speed
  - External temperature sensor
  - Internal temperature sensor
  - PWM control input
  - Analogue control input
  - Protection against moisture
  - Type of protection: IP 54 / IP 68

1) Fibreglass-reinforced plastic

Nominal data	Air flow	Air flow	Nominal voltage	Voltage range	Sound pressure level	Sound power level	Sintec sleeve bearings / Ball bearings	Input power	Nominal speed	Temperature range	Service life L_{10} (40 °C) ebm-papst Standard / Service life L_{10} (T_{max}) ebm-papst Standard	Life expectancy L_{10IPC} (40 °C) see page 17	Curve
Type	m³/h	CFM	VDC	VDC	dB(A)	Bel(A)	□/■	Watts	rpm	°C	Hours	Hours	
8412 NGLE	33	19,4	**12**	8...15	12	3,5	□	0,5	1 500	-20...+85	80 000 / 27 500	135 000	①
8412 NLE	33	19,4	**12**	8...15	17	3,7	■	0,3	1 500	-20...+85	80 000 / 27 500	135 000	①
8412 NGMLE	45	26,5	**12**	8...15	19	3,9	□	0,9	2 050	-20...+80	80 000 / 32 500	135 000	②
8412 NMLE	45	26,5	**12**	8...15	21	4,0	■	0,6	2 050	-20...+85	80 000 / 27 500	135 000	②
8412 NGME	58	34,1	**12**	8...15	26	4,3	□	1,4	2 600	-20...+75	80 000 / 35 000	135 000	③
8412 NME	58	34,1	**12**	8...15	27	4,4	■	1,0	2 600	-20...+75	80 000 / 35 000	135 000	③
8412 NG	69	40,6	**12**	8...15	32	4,7	□	2,0	3 100	-20...+70	70 000 / 35 000	117 500	④
8412 N	69	40,6	**12**	8...15	32	4,7	■	1,7	3 100	-20...+70	70 000 / 35 000	117 500	④
8412 NH	79	46,5	**12**	8...13,2	37	5,0	■	2,1	3 600	-20...+70	70 000 / 35 000	117 500	⑤
8412 NH-217	79	46,5	**12**	8...15	37	5,0	■	2,5	3 600	-20...+70	70 000 / 35 000	117 500	⑤
8414 NGL	33	19,4	**24**	18...28	12	3,5	□	0,9	1 500	-20...+70	80 000 / 40 000	135 000	①
8414 NL	33	19,4	**24**	18...28	17	3,7	■	0,8	1 500	-20...+70	80 000 / 40 000	135 000	①
8414 NGML	45	26,5	**24**	18...28	19	3,9	□	1,2	2 050	-20...+70	80 000 / 40 000	135 000	②
8414 NML	45	26,5	**24**	18...28	21	4,0	■	1,1	2 050	-20...+70	80 000 / 40 000	135 000	②
8414 NGM	58	34,1	**24**	18...28	26	4,3	□	1,4	2 600	-20...+70	80 000 / 40 000	135 000	③
8414 NM	58	34,1	**24**	18...28	27	4,4	■	1,4	2 600	-20...+70	80 000 / 40 000	135 000	③
8414 NG	69	40,6	**24**	18...28	32	4,7	□	2,2	3 100	-20...+70	70 000 / 35 000	117 500	④
8414 N	69	40,6	**24**	18...28	32	4,7	■	1,8	3 100	-20...+70	70 000 / 35 000	117 500	④
8414 NH	79	46,5	**24**	18...26	37	5,0	■	2,4	3 600	-20...+70	70 000 / 35 000	117 500	⑤
8414 NH-221	79	46,5	**24**	18...28	37	5,0	■	2,2	3 600	-20...+70	70 000 / 35 000	117 500	⑤
8418 N	69	40,6	**48**	36...56	32	4,7	■	2,0	3 100	-20...+70	70 000 / 35 000	117 500	④

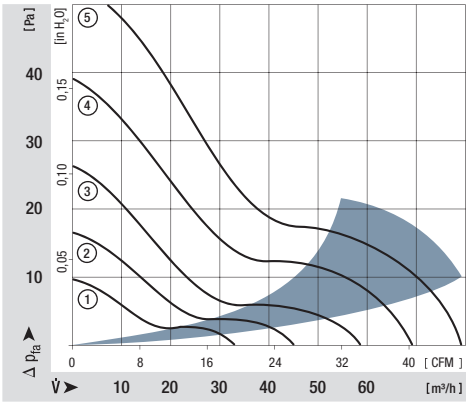

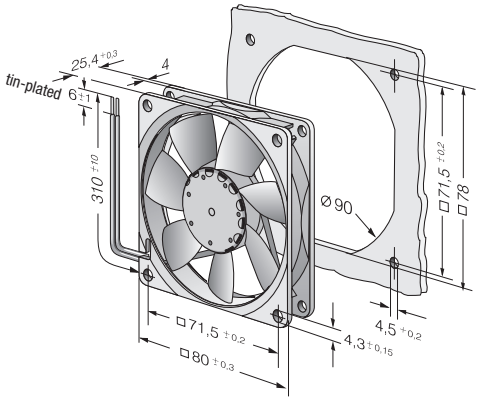

Guard grilles
from p. 238

ebmpapst

max. 58 m³/h

DC axial fans

Series 8400 N VARIOFAN 80 x 80 x 25 mm

- **Material:** Housing: GRP[1)] (PBT)
  Impeller: GRP[1)] (PA)
- **Direction of air flow:** Exhaust over struts
- **Direction of rotation:** Counter-clockwise, seen on rotor
- **Connection:** Via single wires AWG 24, TR 64
- **Highlights:** Automatic speed adjustment with temperature sensor
- **Mass:** 95 g

- **Possible special versions:**
  (See chapter DC fans - specials)
  - Speed signal
  - Go / No-go alarm
  - External temperature sensor
  - Internal temperature sensor
  - Protection against moisture

1) Fibreglass-reinforced plastic

Nominal data		Air flow	Air flow	Nominal voltage	Voltage range	Sound pressure level	Sound power level	Sintec sleeve bearings / Ball bearings	Input power	Nominal speed	Temperature range	Service life L_{10} (40 °C) ebm-papst Standard / Service life L_{10} (T_{max}) ebm-papst Standard	Life expectancy L_{10IPC} (40 °C) see page 17	Curve
Type		m³/h	CFM	VDC	VDC	dB(A)	Bel(A)	□/■	Watts	rpm	°C	Hours	Hours	
30°C ▼ 50°C	8412 NGLV	20	11,8	12	10...14	< 10	< 3	□	0,9	900	-20...+65	80 000 / 45 000	135 000	①
		33	19,4			12	3,5		1,1	1 500				②
30°C ▼ 50°C	8412 NGMLV	27	15,9	12	8...14	< 10	3,0	□	1,1	1 200	-20...+65	80 000 / 45 000	135 000	③
		45	26,6			19	3,9		1,5	2 050				④
30°C ▼ 50°C	8412 NGMI	35	20,6	12	8...14	< 13	3,5	□	1,4	1 600	-20...+65	80 000 / 45 000	135 000	⑤
		58	34,1			26	4,3		2,0	2 600				⑥

Subject to alternations

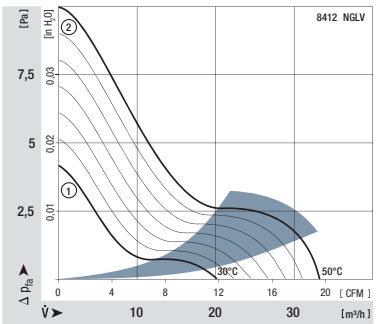

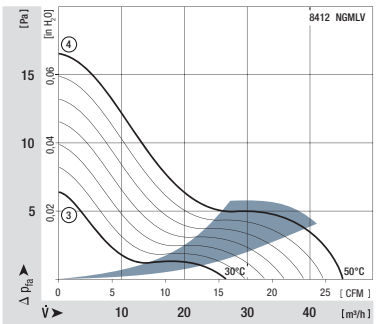

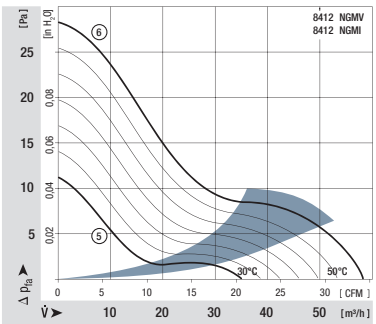

V-Types

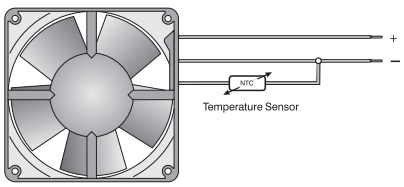

The temperature sensor for controlling the motor speed is not included in delivery.
Temperature sensor LZ 370 see accessories.

I-Types

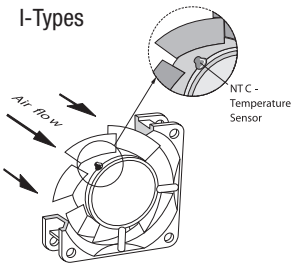

Temperature sensor (NTC-resistor) for controlling the motor speed is positioned directly in the air flow.

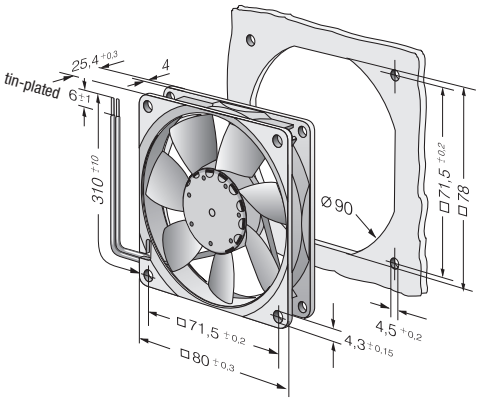

max. 80 m³/h

DC axial fans

Series 8300 80 x 80 x 32 mm

- **Material:** Housing: GRP[1)] (PBT)
  Impeller: GRP[1)] (PA)
- **Direction of air flow:** Exhaust over struts
- **Direction of rotation:** Clockwise, seen on rotor
- **Connection:** Via single wires AWG 22, TR 64
- **Mass:** 170 g

1) Fibreglass-reinforced plastic

- **Possible special versions:**
  (See chapter DC fans - specials)
  - Speed signal
  - Go / No-go alarm
  - Alarm with limit speed
  - External temperature sensor
  - Internal temperature sensor
  - PWM control input
  - Analogue control input
  - Protection against moisture
  - Protection against fog
  - Type of protection: IP 54 / IP 68

Nominal data	Air flow	Air flow	Nominal voltage	Voltage range	Sound pressure level	Sound power level	Sintec sleeve bearings / Ball bearings	Input power	Nominal speed	Temperature range	Service life L_{10} (40 °C) ebm-papst Standard / Service life L_{10} (T_{max}) ebm-papst Standard	Life expectancy L_{10IPC} (40 °C) see page 17	Curve
Type	**m³/h**	**CFM**	**VDC**	**VDC**	**dB(A)**	**Bel(A)**	□/■	**Watts**	**rpm**	**°C**	**Hours**	**Hours**	
8312 L	32	18,8	**12**	6...15	24	4,0	■	1,2	2 000	-20...+75	80 000 / 32 500	135 000	①
8312 M	48	28,3	**12**	6...15	34	5,0	■	2,2	3 000	-20...+75	70 000 / 27 500	117 500	②
8312	54	31,8	**12**	6...15	36	5,2	■	2,6	3 300	-20...+75	70 000 / 27 500	117 500	③
8312 HL	67	39,4	**12**	6...15	43	5,8	■	4,0	4 200	-20...+75	62 500 / 25 000	105 000	④
8312 H	80	47,1	**12**	6...12,6	48	6,2	■	6,4	5 000	-20...+60	55 000 / 35 000	92 500	⑤
8314 L	32	18,8	**24**	12...31,5	24	4,0	■	1,0	2 000	-20...+75	80 000 / 32 500	135 000	①
8314 M	48	28,3	**24**	12...31,5	34	5,0	■	2,3	3 000	-20...+75	70 000 / 27 500	117 500	②
8314	54	31,8	**24**	12...31,5	36	5,2	■	2,7	3 300	-20...+75	70 000 / 27 500	117 500	③
8314 HL	67	39,4	**24**	12...31,5	43	5,8	■	4,3	4 200	-20...+75	62 500 / 25 000	105 000	④
8314 H	80	47,1	**24**	12...28	48	6,2	■	6,0	5 000	-20...+75	55 000 / 22 500	92 500	⑤
8318	54	31,8	**48**	36...60	36	5,2	■	3,0	3 300	-20...+75	70 000 / 27 500	117 500	③
8318 HL	67	39,4	**48**	36...60	43	5,8	■	4,2	4 200	-20...+75	62 500 / 25 000	105 000	④
8318 H	80	47,1	**48**	36...60	48	6,2	■	6,2	5 000	-20...+65	55 000 / 30 000	92 500	⑤

Subject to alternations

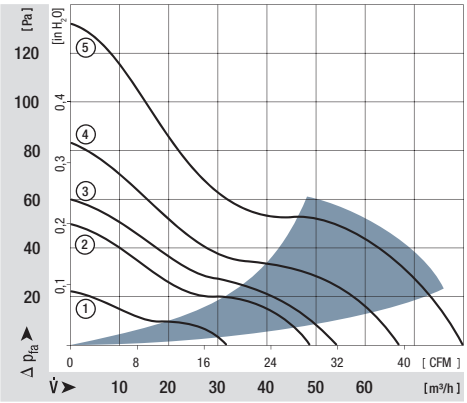

Rotor protrusion max. 0,4 mm.

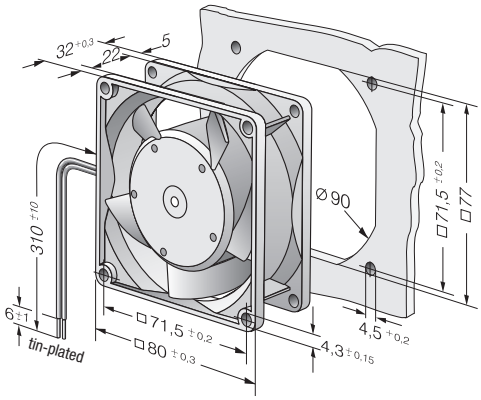

Guard grilles
from p. 238

ebmpapst

max. 222 m³/h

DC axial fans

Series 8200 J 80 x 80 x 38 mm

- **Material:** Housing: GRP[1)] (PBT)
  Impeller: GRP[1)] (PA)
- **Direction of air flow:** Exhaust over struts
- **Direction of rotation:** Counter-clockwise, seen on rotor
- **Connection:** Via single wires AWG 24 (H3 and H4: AWG 22), TR 64
- **Mass:** 160 g (H3 and H4: 200 g)

- **Possible special versions:**
  (See chapter DC fans - specials)
  - Speed signal
  - Go / No-go alarm
  - Alarm with limit speed
  - External temperature sensor
  - Internal temperature sensor
  - PWM control input
  - Analogue control input
  - Protection against moisture
  - Type of protection: IP 54 / IP 68

1) Fibreglass-reinforced plastic

Nominal data	Air flow	Air flow	Nominal voltage	Voltage range	Sound pressure level	Sound power level	Sintec sleeve bearings / Ball bearings	Input power*	Nominal speed	Temperature range	Service life L_{10} (40 °C) ebm-papst Standard / Service life L_{10} (T_{max}) ebm-papst Standard	Life expectancy L_{10IPC} (40 °C) see page 17	Curve
Type	**m³/h**	**CFM**	**VDC**	**VDC**	**dB(A)**	**Bel(A)**	□ / ■	**Watts**	**rpm**	**°C**	**Hours**	**Hours**	
8212 JN	132	78	**12**	7...13,8	55	6,6	■	10	8400	-20...+70	62 500 / 32 500	105 000	①
8212 JH3 *S-Force*	190	112	**12**	6...13,8	66	7,3	■	26*	12 000	-20...+70	55 000 / 27 500	92 500	②
8212 JH4 *S-Force*	222	131	**12**	6...13,8	71	7,8	■	39*	14 000	-20...+70	50 000 / 25 000	85 000	③
8214 JN	132	78	**24**	18...26,4	55	6,6	■	11	8400	-20...+70	62 500 / 32 500	105 000	①
8214 JH3 *S-Force*	190	112	**24**	12...27,6	66	7,3	■	26*	12 000	-20...+70	55 000 / 27 500	92 500	②
8214 JH4 *S-Force*	222	131	**24**	12...27,6	71	7,8	■	38*	14 000	-20...+70	50 000 / 25 000	85 000	③
8218 JN	132	78	**48**	36...53	55	6,6	■	11	8400	-20...+70	62 500 / 32 500	105 000	①
8218 JH3 *S-Force*	190	112	**48**	36...53	66	7,3	■	25*	12 000	-20...+70	55 000 / 27 500	92 500	②
8218 JH4 *S-Force*	222	131	**48**	20...58	71	7,8	■	36*	14 000	-20...+70	50 000 / 25 000	85 000	③

Subject to alternations

8200 JH3 and JH4 also available as standard with PWM control input and speed signal.
Speed control range from 2000 rpm up to maximum nominal speed. Stationary at 0 % PWM, maximum speed at sensor break.
* Input power at free air flow, these values can be significantly higher in the operating point.

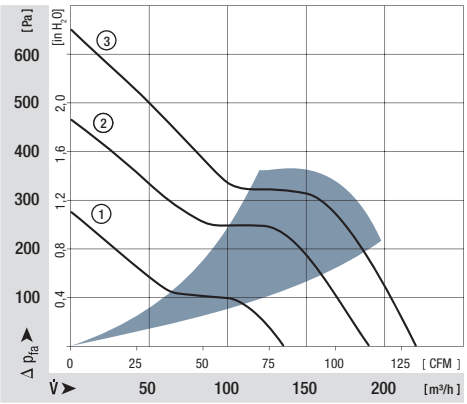

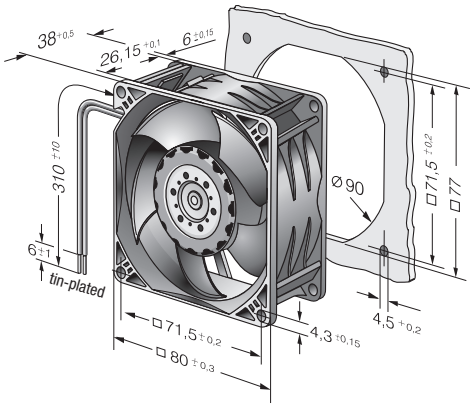

max. 102 m³/h

DC axial fans

Series 3400 N 92 x 92 x 25 mm

- **Material:** Housing: GRP[1)] (PBT)
  Impeller: GRP[1)] (PA)
- **Direction of air flow:** Exhaust over struts
- **Direction of rotation:** Counter-clockwise, seen on rotor
- **Connection:** Via single wires AWG 24, TR 64
- **Mass:** 100 g

- **Possible special versions:**
  (See chapter DC fans - specials)
  - Speed signal
  - Go / No-go alarm
  - Alarm with limit speed
  - External temperature sensor
  - Internal temperature sensor
  - PWM control input
  - Analogue control input
  - Protection against moisture
  - Type of protection: IP 54 / IP 68

1) Fibreglass-reinforced plastic

Nominal data	Air flow	Air flow	Nominal voltage	Voltage range	Sound pressure level	Sound power level	Sintec sleeve bearings / Ball bearings	Input power	Nominal speed	Temperature range	Service life L_{10} (40 °C) ebm-papst Standard / Service life L_{10} (T_{max}) ebm-papst Standard	Life expectancy L_{10IPC} (40 °C) see page 17	Curve
Type	m³/h	CFM	VDC	VDC	dB(A)	Bel(A)	□/■	Watts	rpm	°C	Hours	Hours	
3412 NGLE	61	35,9	**12**	8...15	23	4,0	□	1,1	1 950	-20...+80	80 000 / 22 500	135 000	①
3412 NLE	61	35,9	**12**	8...15	23	4,0	■	0,8	1 950	-20...+85	80 000 / 17 500	135 000	①
3412 NGME	72	42,4	**12**	8...15	28	4,3	□	1,6	2 300	-20...+75	75 000 / 27 500	127 500	②
3412 NME	72	42,4	**12**	8...15	28	4,3	■	1,1	2 300	-20...+75	75 000 / 27 500	127 500	②
3412 NG	84	49,4	**12**	8...15	32	4,7	□	1,9	2 700	-20...+70	70 000 / 35 000	117 500	③
3412 N	84	49,4	**12**	8...15	32	4,7	■	1,7	2 700	-20...+70	70 000 / 35 000	117 500	③
3412 NGH	94	55,3	**12**	8...15	36	5,0	□	2,3	3 000	-20...+70	70 000 / 35 000	117 500	④
3412 NH	94	55,3	**12**	8...15	36	5,0	■	2,1	3 000	-20...+70	70 000 / 35 000	117 500	④
3412 NGHH	102	60,0	**12**	8...13,2	39	5,1	□	3,2	3 250	-20...+60	70 000 / 45 000	127 500	⑤
3412 NHH	102	60,0	**12**	8...13,2	39	5,1	■	2,9	3 250	-20...+60	70 000 / 45 000	127 500	⑤
3412 NHH-379	102	60,0	**12**	8...15	39	5,1	■	2,7	3 250	-20...+70	70 000 / 35 000	117 500	⑤
3414 NGL	61	35,9	**24**	18...28	23	4,0	□	1,4	1 950	-20...+70	80 000 / 40 000	135 000	①
3414 NL	61	35,9	**24**	18...28	23	4,0	■	1,1	1 950	-20...+70	80 000 / 40 000	135 000	①
3414 NGM	72	42,4	**24**	18...28	28	4,3	□	1,7	2 300	-20...+70	75 000 / 37 500	127 500	②
3414 NM	72	42,4	**24**	18...28	28	4,3	■	1,4	2 300	-20...+70	75 000 / 37 500	127 500	②
3414 NG	84	49,4	**24**	18...28	32	4,7	□	2,5	2 700	-20...+70	70 000 / 35 000	117 500	③
3414 N	84	49,4	**24**	18...28	32	4,7	■	2,1	2 700	-20...+70	70 000 / 35 000	117 500	③
3414 NGH	94	55,3	**24**	18...26	36	5,0	□	3,0	3 000	-20...+70	70 000 / 35 000	117 500	④
3414 NH	94	55,3	**24**	18...26	36	5,0	■	2,3	3 000	-20...+70	70 000 / 35 000	117 500	④
3414 NGHH	102	60,0	**24**	18...26	39	5,1	□	3,2	3 250	-20...+70	70 000 / 35 000	117 500	⑤
3414 NGHH-389	102	60,0	**24**	18...28	39	5,1	□	3,2	3 250	-20...+70	70 000 / 35 000	117 500	⑤
3414 NHH	102	60,0	**24**	18...26	39	5,1	■	3,1	3 250	-20...+70	70 000 / 35 000	117 500	⑤
3414 NHH-386	102	60,0	**24**	18...28	39	5,1	■	3,2	3 250	-20...+70	70 000 / 35 000	117 500	⑤
3418 N	84	49,4	**48**	36...56	32	4,7	■	2,4	2 700	-20...+70	70 000 / 35 000	117 500	③

Other 48 VDC models on request.

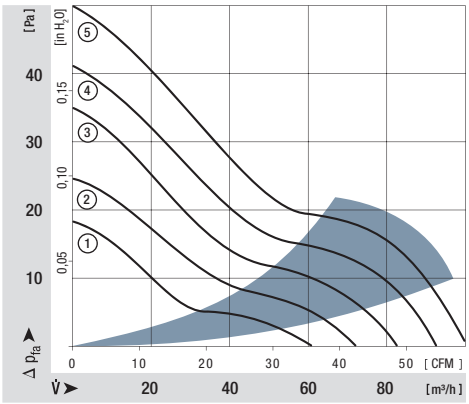

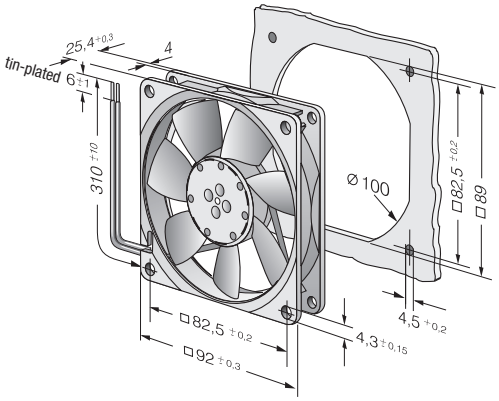

Guard grilles
from p. 238

ebmpapst

max. 84 m³/h

DC axial fans

Series 3400 N VARIOFAN 92 x 92 x 25 mm

- **Material:** Housing: GRP[1)] (PBT)
  Impeller: GRP[1)] (PA)
- **Direction of air flow:** Exhaust over struts
- **Direction of rotation:** Counter-clockwise, seen on rotor
- **Connection:** Via single wires AWG 24, TR 64
- **Highlights:** Automatic speed adjustment with temperature sensor
- **Mass:** 100 g

- **Possible special versions:**
  (See chapter DC fans - specials)
  - Speed signal
  - Go / No-go alarm
  - External temperature sensor
  - Internal temperature sensor
  - Protection against moisture

1) Fibreglass-reinforced plastic

Nominal data		Air flow	Air flow	Nominal voltage	Voltage range	Sound pressure level	Sound power level	Sintec sleeve bearings / Ball bearings	Input power	Nominal speed	Temperature range	Service life L_{10} (40 °C) ebm-papst Standard / Service life L_{10} (T_{max}) ebm-papst Standard	Life expectancy L_{10IPC} (40 °C) see page 17	Curve
Type		m³/h	CFM	VDC	VDC	dB(A)	Bel(A)	□ / ■	Watts	rpm	°C	Hours	Hours	
30°C	3412 NGMV	44	25,9	12	8...14	14	3,5	□	1,5	1 400	-20...+65	75 000 / 42 500	127 500	①
50°C		72	42,4			28	4,3		2,0	2 300				②
30°C	3412 NGV	50	29,4	12	8...12,6	16	3,7	□	1,6	1 600	-20...+65	75 000 / 42 500	127 500	③
50°C		84	49,4			32	4,7		2,5	2 700				④

Subject to alternations

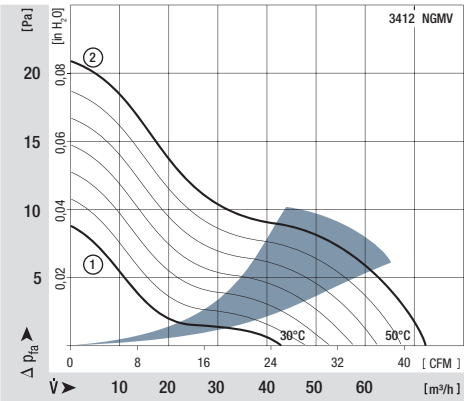

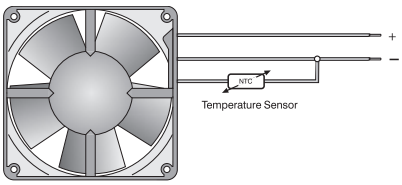

The temperature sensor for controlling the motor speed is not included in delivery.
Temperature sensor LZ 370 see accessories.

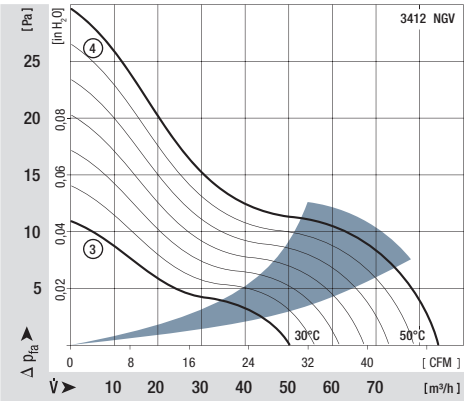

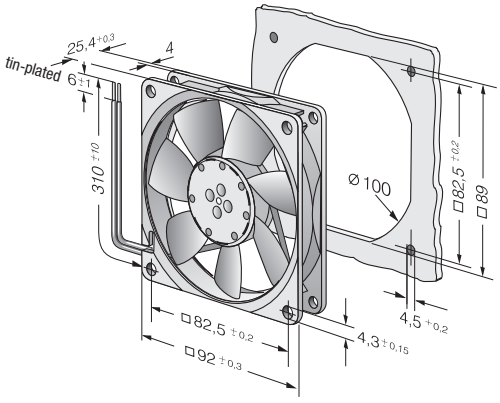

max. 107 m³/h

DC axial fans

Series 3300 92 x 92 x 32 mm

- **Material:** Housing: GRP[1)] (PBT)
  Impeller: GRP[1)] (PA)
- **Direction of air flow:** Exhaust over struts
- **Direction of rotation:** Clockwise, seen on rotor
- **Connection:** Via single wires AWG 22, TR 64
- **Mass:** 190 g

- **Possible special versions:**
  (See chapter DC fans - specials)
  - Speed signal
  - Go / No-go alarm
  - Alarm with limit speed
  - External temperature sensor
  - Internal temperature sensor
  - PWM control input
  - Analogue control input
  - Protection against moisture
  - Protection against salt fog
  - Type of protection: IP 54 / IP 68

1) Fibreglass-reinforced plastic

Nominal data	Air flow	Air flow	Nominal voltage	Voltage range	Sound pressure level	Sound power level	Sintec sleeve bearings / Ball bearings	Input power	Nominal speed	Temperature range	Service life L_{10} (40 °C) ebm-papst Standard / Service life L_{10} (T_{max}) ebm-papst Standard	Life expectancy L_{10IPC} (40 °C) see page 17	Curve
Type	**m³/h**	**CFM**	**VDC**	**VDC**	**dB(A)**	**Bel(A)**	□/■	**Watts**	**rpm**	**°C**	**Hours**	**Hours**	
3312 L	56	33,0	**12**	6...15	29	4,5	■	1,5	2 150	-20...+75	80 000 / 35 000	135 000	①
3312 GM	68	40,0	**12**	6...15	34	4,8	□	1,8	2 600	-20...+75	70 000 / 30 000	117 500	②
3312 M	68	40,0	**12**	6...15	34	4,8	■	1,8	2 600	-20...+75	70 000 / 30 000	117 500	②
3312	80	47,1	**12**	6...15	37	5,2	■	2,5	3 000	-20...+75	70 000 / 30 000	117 500	③
3312-177	93	54,7	**12**	6...15	43	5,7	■	3,5	3 400	-20...+75	65 000 / 27 500	110 000	⑤
3314 G	80	47,1	**24**	12...28	37	5,2	□	2,5	3 000	-20...+75	70 000 / 30 000	117 500	③
3314	80	47,1	**24**	12...28	37	5,2	■	2,5	3 000	-20...+75	70 000 / 30 000	117 500	③
3314-140	85	50,0	**24**	12...28	40	5,4	■	3,0	3 200	-20...+75	70 000 / 30 000	117 500	④
3314 H	107	63,0	**24**	12...28	47	6,0	■	5,0	4 000	-20...+75	57 500 / 25 000	97 500	⑥
3318	80	47,1	**48**	36...60	37	5,2	■	2,4	3 000	-20...+75	70 000 / 30 000	117 500	③
3318 H	107	63,0	**48**	36...60	47	6,0	■	4,9	4 000	-20...+60	57 500 / 32 500	97 500	⑥

Subject to alternations

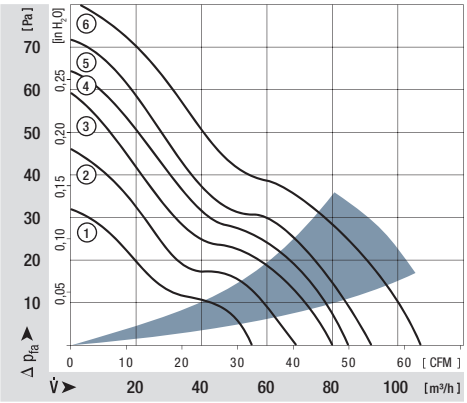

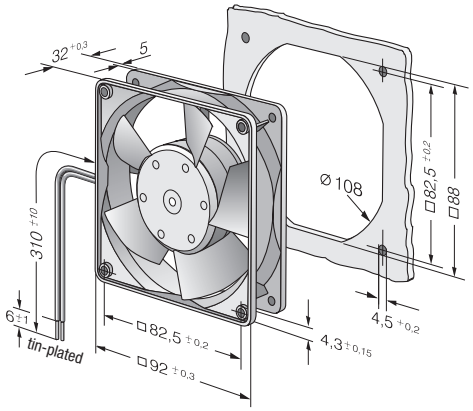

Guard grilles
from p. 238

ebmpapst

max. 133 m³/h

DC axial fans

Series 3300 N 92 x 92 x 32 mm

- **Material:** Housing: GRP[1)] (PBT)
  Impeller: GRP[1)] (PA)
- **Direction of air flow:** Exhaust over struts
- **Direction of rotation:** Clockwise, seen on rotor
- **Connection:** Via single wires AWG 24
  UL 1061, TR 64
- **Mass:** 190 g

- **Possible special versions:**
  (See chapter DC fans - specials)
  - Speed signal
  - Go / No-go alarm
  - External temperature sensor
  - Internal temperature sensor
  - PWM control input
  - Analogue control input
  - Protection against moisture
  - Protection against salt fog
  - Type of protection: IP 54 / IP 68

1) Fibreglass-reinforced plastic

Nominal data	Air flow	Air flow	**Nominal voltage**	Voltage range	Sound pressure level	Sound power level	Sintec sleeve bearings / Ball bearings	Input power	Nominal speed	Temperature range	Service life L_{10} (40 °C) ebm-papst Standard / Service life L_{10} (T_{max}) ebm-papst Standard	Life expectancy L_{10IPC} (40 °C) see page 17	Curve
Type	**m³/h**	**CFM**	**VDC**	**VDC**	**dB(A)**	**Bel(A)**	□/■	**Watts**	**rpm**	**°C**	**Hours**	**Hours**	
3312 NL	56	33	**12**	6...15	23	4,0	■	0,8	1 850	-20...+75	80 000 / 35 000	135 000	①
3312 NM	68	40	**12**	6...15	29	4,3	■	1,3	2 250	-20...+75	70 000 / 30 000	117 500	②
3312 NN	80	47	**12**	6...15	34	4,7	■	1,7	2 650	-20...+75	70 000 / 30 000	117 500	③
3312 NH	93	54	**12**	6...15	36,5	5,0	■	2,5	3 050	-20...+75	65 000 / 27 500	110 000	④
3312 NHH	107	63	**12**	6...15	40	5,4	■	3,4	3 450	-20...+75	57 500 / 25 000	97 500	⑤
3312 NH3	133	78	**12**	6...15	48	5,9	■	6,4	4 350	-20...+70	50 000 / 25 000	85 000	⑥

Subject to alternations

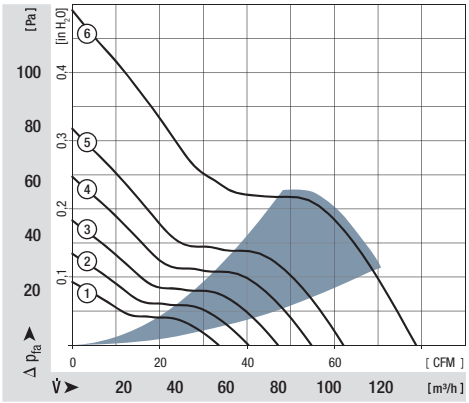

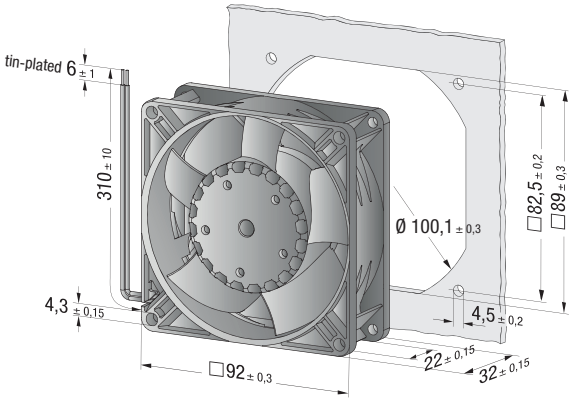

max. 280 m³/h

DC axial fans

Series 3200 J 92 x 92 x 38 mm

- **Material:** Housing: GRP[1)] (PBT)
  Impeller: GRP[1)] (PA)
- **Direction of air flow:** Exhaust over struts
- **Direction of rotation:** Clockwise, seen on rotor
- **Connection:** Via single wires AWG 24 (H3 and H4: AWG 22), TR 64
- **Mass:** 240 g (H3 and H4: 280 g)

- **Possible special versions:**
  (See chapter DC fans - specials)
  - Speed signal
  - Go / No-go alarm
  - Alarm with limit speed
  - External temperature sensor
  - Internal temperature sensor
  - PWM control input
  - Analogue control input
  - Protection against moisture
  - Type of protection: IP 54 / IP 68

1) Fibreglass-reinforced plastic

Nominal data	Air flow	Air flow	**Nominal voltage**	Voltage range	Sound pressure level	Sound power level	Sintec sleeve bearings / Ball bearings	Input power*	Nominal speed	Temperature range	Service life L_{10} (40 °C) ebm-papst Standard / Service life L_{10} (T_{max}) ebm-papst Standard	Life expectancy L_{10IPC} (40 °C) see page 17	Curve
Type	**m³/h**	**CFM**	**VDC**	**VDC**	**dB(A)**	**Bel(A)**	□/■	**Watts**	**rpm**	**°C**	**Hours**	**Hours**	
3212 JN	130	76,5	**12**	7...13,8	51	6,1	■	7,5	6 000	-20 ...+70	70 000 / 35 000	117 500	①
3212 JH	146	86,0	**12**	7...15	55	6,4	■	9,0	6 800	-20 ...+70	70 000 / 35 000	117 500	②
3212 JH3 *S-Force*	237	139,5	**12**	6...13,8	69	7,8	■	31,0*	11 000	-20 ...+70	65 000 / 32 500	110 000	③
3212 JH4 *S-Force*	280	164,8	**12**	6...13,8	73	8,2	■	50,0*	13 000	-20 ...+70	60 000 / 30 000	110 000	④
3214 JN	130	76,5	**24**	11...28	51	6,1	■	6,5	6 000	-20 ...+70	70 000 / 35 000	117 500	①
3214 JH	146	86,0	**24**	12...30	55	6,4	■	9,0	6 800	-20 ...+70	70 000 / 35 000	117 500	②
3214 JH3 *S-Force*	237	139,5	**24**	12...27,6	69	7,8	■	30,0*	11 000	-20 ...+70	65 000 / 32 500	110 000	③
3214 JH4 *S-Force*	280	164,8	**24**	12...27,6	73	8,2	■	50,0*	13 000	-20 ...+70	60 000 / 30 000	110 000	④
3218 JN	130	76,5	**48**	36...56	51	6,1	■	7,0	6 000	-20 ...+70	70 000 / 35 000	117 500	①
3218 JH	146	86,0	**48**	36...53	55	6,4	■	9,5	6 800	-20 ...+70	70 000 / 35 000	117 500	②
3218 JH3 *S-Force*	237	139,5	**48**	20...58,0	69	7,8	■	29,0*	11 000	-20 ...+70	65 000 / 32 500	110 000	③
3218 JH4 *S-Force*	280	164,8	**48**	20...58,0	73	8,2	■	50,0*	13 000	-20 ...+70	60 000 / 30 000	110 000	④

Subject to alternations

3200 JH3 and JH4 also available as standard with PWM control input and speed signal.
Speed control range from 2000 rpm up to maximum nominal speed. Stationary at 0 % PWM, maximum speed at sensor break.
* Input power at free air flow, these values can be significantly higher in the operating point.

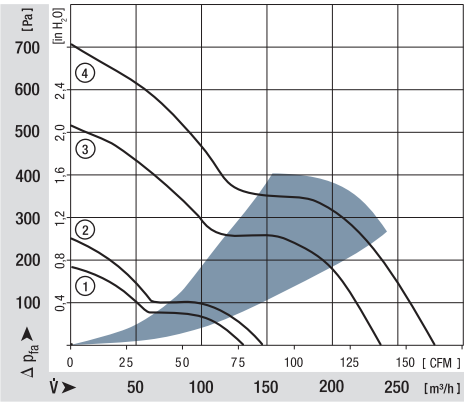

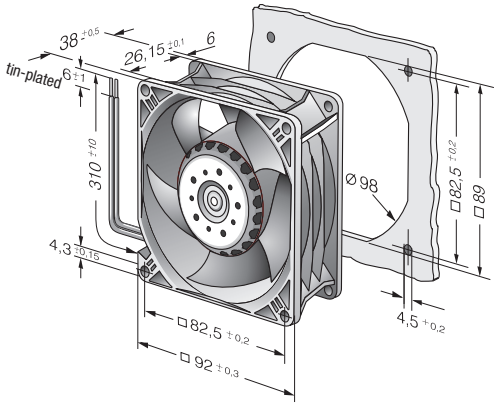

Guard grilles
from p. 238

ebmpapst

max. 270 m³/h

S-Panther

DC axial fans

Series 3250 J 92 x 92 x 38 mm

- **Material:** Housing: GRP[1)] (PBT)
  Impeller: GRP[1)] (PA)
- **Direction of air flow:** Exhaust over struts
- **Direction of rotation:** Clockwise, seen on rotor
- **Connection:** Via single wires AWG 22, TR 64
- **Mass:** 240 g

- **Possible special versions:**
  (See chapter DC fans - specials)
  - Speed signal
  - Go / No-go alarm
  - External temperature sensor
  - Internal temperature sensor
  - PWM control input
  - Analogue control input
  - Protection against moisture
  - Protection against salt fog
  - Type of protection: IP 54 / IP 68

1) Fibreglass-reinforced plastic

Nominal data	Air flow	Air flow	**Nominal voltage**	Voltage range	Sound pressure level	Sound power level	Sintec sleeve bearings / Ball bearings	Input power*	Nominal speed	Temperature range	Service life L_{10} (40 °C) ebm-papst Standard / Service life L_{10} (T_{max}) ebm-papst Standard	Life expectancy L_{10IPC} (40 °C) see page 17	Curve
Type	**m³/h**	**CFM**	**VDC**	**VDC**	**dB(A)**	**Bel(A)**	□/■	**Watts**	**rpm**	**°C**	**Hours**	**Hours**	
3258 JHP	145	85	**48**	36...56	47	5,8	■	5,3	4 100	-20...+70	85 000 / 42 500	142 500	①
3258 JHHP	235	138	**48**	36...56	59	7,2	■	22,6	6 650	-20...+70	80 000 / 40 000	135 000	②
3258 JH3P	270	158	**48**	36...56	63	7,7	■	34,3	7 600	-20...+70	75 000 / 37 500	127 500	③

Subject to alternations

12 V and 24 V variants also available on request.
* Input power at free air flow, these values can be significantly higher in the operating point.

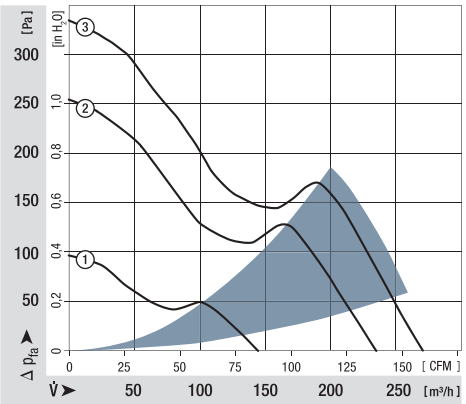

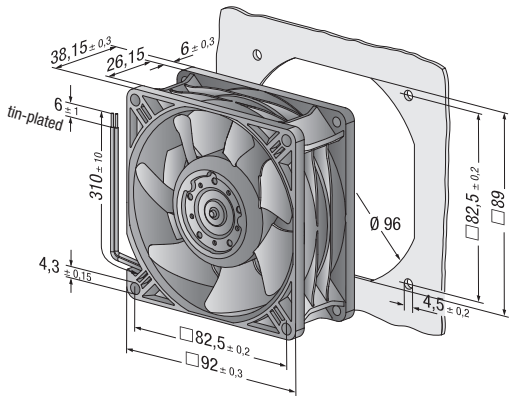

max. 170 m³/h

DC axial fans

Series 4400 F 119 x 119 x 25 mm

- **Material:** Housing: GRP[1)] (PBT)
  Impeller: GRP[1)] (PA)
- **Direction of air flow:** Exhaust over struts
- **Direction of rotation:** Counter-clockwise, seen on rotor
- **Connection:** Via single wires AWG 24, TR 64
- **Highlights:** Ball bearings and plain bearings available
- **Mass:** 175 g

- **Possible special versions:**
  (See chapter DC fans - specials)
  - Speed signal
  - Go / No-go alarm
  - Alarm with limit speed
  - External temperature sensor
  - Internal temperature sensor
  - PWM control input
  - Analogue control input
  - Protection against moisture

1) Fibreglass-reinforced plastic

Nominal data	Air flow	Air flow	Nominal voltage	Voltage range	Sound pressure level	Sound power level	Sintec sleeve bearings / Ball bearings	Input power	Nominal speed	Temperature range	Service life L_{10} (40 °C) ebm-papst Standard / Service life L_{10} (T_{max}) ebm-papst Standard	Life expectancy L_{10IPC} (40 °C) see page 17	Curve
Type	**m³/h**	**CFM**	**VDC**	**VDC**	**dB(A)**	**Bel(A)**	□/■	**Watts**	**rpm**	**°C**	**Hours**	**Hours**	
4412 FGL	94	55	**12**	7...14	26	3,9	□	1,3	1 600	-20...+75	80 000 / 35 000	135 000	①
4412 FGML	114	67	**12**	7...12,6	32	4,3	□	2,0	1 950	-20...+75	75 000 / 32 500	127 500	②
4412 FML	114	67	**12**	7...12,6	32	4,3	■	2,0	1 950	-20...+75	75 000 / 32 500	127 500	②
4412 FGM	140	82	**12**	7...12,6	38	4,8	□	3,2	2 400	-20...+75	70 000 / 30 000	117 500	③
4412 FM	140	82	**12**	7...12,6	38	4,8	■	3,2	2 400	-20...+75	70 000 / 30 000	117 500	③
4412 FG	170	100	**12**	8...12,6	43	5,3	□	5,3	2 900	-20...+60	60 000 / 37 500	102 500	④
4412 F	170	100	**12**	8...12,6	43	5,3	■	5,3	2 900	-20...+60	60 000 / 37 500	102 500	④
4414 FL	94	55	**24**	18...28	26	3,9	■	1,2	1 600	-20...+75	80 000 / 35 000	135 000	①
4414 FM	140	82	**24**	12...28	38	4,8	■	3,1	2 400	-20...+75	70 000 / 30 000	117 500	③
4414 FG	170	100	**24**	12...28	43	5,3	□	5,0	2 900	-20...+60	60 000 / 37 500	102 500	④
4414 F	170	100	**24**	12...28	43	5,3	■	5,0	2 900	-20...+60	60 000 / 37 500	102 500	④
4418 FG	170	100	**48**	28...53	43	5,3	□	5,4	2 900	-20...+60	60 000 / 37 500	102 500	④
4418 F	170	100	**48**	28...53	43	5,3	■	5,4	2 900	-20...+60	60 000 / 37 500	102 500	④

Subject to alternations

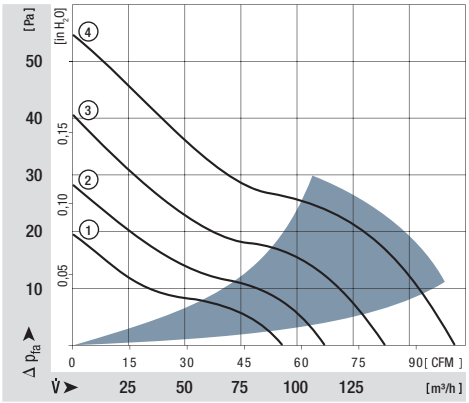

Available on request:
Fan housing with moulded-in spacers. For mounting over both flanges.

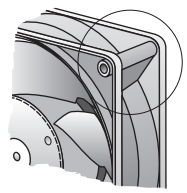

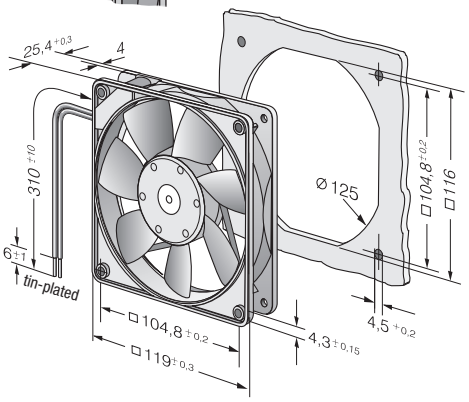

Guard grilles
from p. 238

ebmpapst

max. 225 m³/h

DC axial fans

Series 4400 FN 119 x 119 x 25 mm

- **Material:** Housing: GRP[1)] (PBT)
  Impeller: GRP[1)] (PA)
- **Direction of air flow:** Exhaust over struts
- **Direction of rotation:** Counter-clockwise, seen on rotor
- **Connection:** Via single wires AWG 22, TR 64
- **Mass:** 240 g

- **Possible special versions:**
  (See chapter DC fans - specials)
  - Speed signal
  - Go / No-go alarm
  - Alarm with limit speed
  - External temperature sensor
  - Internal temperature sensor
  - PWM control input
  - Analogue control input
  - Protection against moisture

1) Fibreglass-reinforced plastic

Nominal data	Air flow	Air flow	Nominal voltage	Voltage range	Sound pressure level	Sound power level	Sintec sleeve bearings / Ball bearings	Input power	Nominal speed	Temperature range	Service life L_{10} (40 °C) ebm-papst Standard / Service life L_{10} (T_{max}) ebm-papst Standard	Life expectancy L_{10}IPC (40 °C) see page 17	Curve
Type	**m³/h**	**CFM**	**VDC**	**VDC**	**dB(A)**	**Bel(A)**	□/■	**Watts**	**rpm**	**°C**	**Hours**	**Hours**	
4412 FNH	225	132	**12**	9...13,2	55	6,7	■	12	5 400	-20...+70	60 000 / 30 000	102 500	②
4414 FNN	200	118	**24**	14...28	52	6,5	■	8,3	4 850	-20...+70	60 000 / 30 000	102 500	①
4414 FNH	225	132	**24**	18...26,4	55	6,7	■	12	5 400	-20...+70	60 000 / 30 000	102 500	②
4418 FNH	225	132	**48**	36...53	55	6,7	■	12	5 400	-20...+70	60 000 / 30 000	102 500	②

Subject to alternations

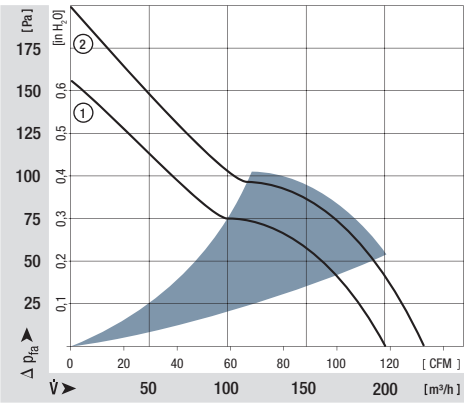

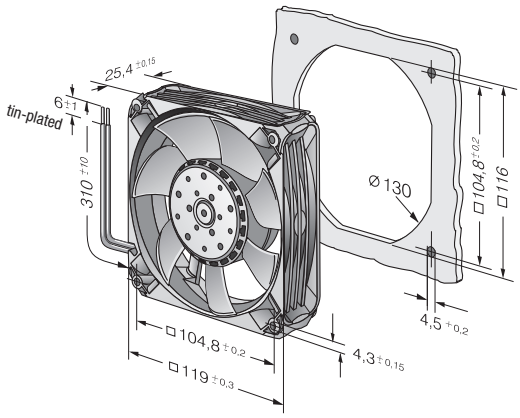

max. 204 m³/h

DC axial fans

Series 4300 119 x 119 x 32 mm

- **Material:** Housing: GRP[1)] (PBT)
  Impeller: GRP[1)] (PA)
- **Direction of air flow:** Exhaust over struts
- **Direction of rotation:** Clockwise, seen on rotor
- **Connection:** Via single wires AWG 22, TR 64
- **Highlights:** Ball bearings and plain bearings available
- **Mass:** 220 g

- **Possible special versions:**
  (See chapter DC fans - specials)
  - Speed signal
  - Go / No-go alarm
  - Alarm with limit speed
  - External temperature sensor
  - Internal temperature sensor
  - PWM control input
  - Analogue control input
  - Protection against moisture
  - Protection against salt fog
  - Type of protection: IP 54 / IP 68

1) Fibreglass-reinforced plastic

Nominal data	Air flow	Air flow	Nominal voltage	Voltage range	Sound pressure level	Sound power level	Sintec sleeve bearings / Ball bearings	Input power	Nominal speed	Temperature range	Service life L_{10} (40 °C) ebm-papst Standard / Service life L_{10} (T_{max}) ebm-papst Standard	Life expectancy L_{10IPC} (40 °C) see page 17	Curve
Type	**m³/h**	**CFM**	**VDC**	**VDC**	**dB(A)**	**Bel(A)**	□/■	**Watts**	**rpm**	**°C**	**Hours**	**Hours**	
4312 GL	95	56	**12**	6...15	30	4,3	□	1,2	1 550	-20...+75	80 000 / 35 000	135 000	①
4312 L	95	56	**12**	6...15	30	4,3	■	1,2	1 550	-20...+75	80 000 / 35 000	135 000	①
4312 GM	140	82	**12**	6...15	39	5,3	□	3,1	2 300	-20...+75	70 000 / 30 000	117 500	②
4312 M	140	82	**12**	6...15	39	5,3	■	3,1	2 300	-20...+75	70 000 / 30 000	117 500	②
4312 G	170	100	**12**	6...15	45	5,8	□	5,0	2 800	-20...+70	62 500 / 30 000	105 000	③
4312	170	100	**12**	6...15	45	5,8	■	5,0	2 800	-20...+70	62 500 / 30 000	105 000	③
4312-179	204	120	**12**	6...13,2	51	6,4	■	9,4	3 400	-20...+65	47 500 / 27 500	80 000	⑤
4314 L	95	56	**24**	12...28	30	4,3	■	1,2	1 550	-20...+75	80 000 / 35 000	135 000	①
4314 M	140	82	**24**	12...28	39	5,3	■	2,8	2 300	-20...+75	70 000 / 30 000	117 500	②
4314 G	170	100	**24**	12...28	45	5,8	□	4,7	2 800	-20...+75	62 500 / 27 500	105 000	③
4314	170	100	**24**	12...28	45	5,8	■	5,0	2 800	-20...+75	62 500 / 27 500	105 000	③
4314-147	180	106	**24**	12...28	47	6,1	■	4,7	3 000	-20...+75	57 500 / 25 000	80 000	④
4314-180	204	120	**24**	12...26	51	6,4	■	8,5	3 400	-20...+70	45 000 / 22 500	75 000	⑤
4318 M	140	82	**48**	36...56	39	5,3	■	3,6	2 300	-20...+75	70 000 / 30 000	117 500	②
4318	170	100	**48**	36...53	45	5,8	■	5,1	2 800	-20...+75	62 500 / 27 500	105 000	③

Subject to alternations

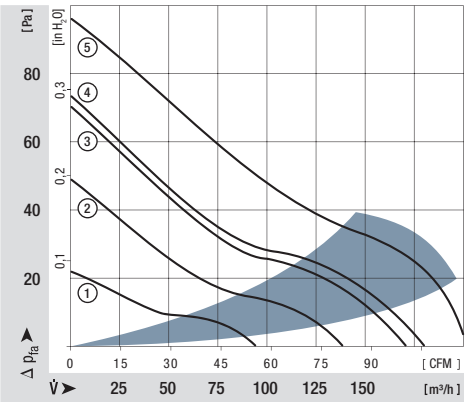

Rotor protrusion max. 0.4 mm.

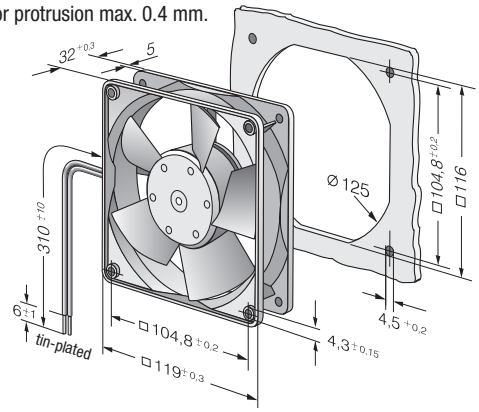

Guard grilles
from p. 238

ebmpapst

max. 170 m³/h

DC axial fans

Series 4300 VARIOFAN 119 x 119 x 32 mm

- **Material:** Housing: GRP[1)] (PBT)
  Impeller: GRP[1)] (PA)
- **Direction of air flow:** Exhaust over struts
- **Direction of rotation:** Clockwise, seen on rotor
- **Connection:** Via single wires AWG 22, TR 64
- **Highlights:** Speed automatically adjusted to cooling requirement
- **Mass:** 220 g

- **Possible special versions:**
  (See chapter DC fans - specials)
  - Speed signal
  - Go / No-go alarm
  - Alarm with limit speed
  - External temperature sensor
  - Internal temperature sensor
  - PWM control input
  - Analogue control input
  - Protection against moisture

1) Fibreglass-reinforced plastic

Nominal data		Air flow	Air flow	Nominal voltage	Voltage range	Sound pressure level	Sound power level	Sintec sleeve bearings / Ball bearings	Input power	Nominal speed	Temperature range	Service life L_{10} (40 °C) ebm-papst Standard / Service life L_{10} (T_{max}) ebm-papst Standard	Life expectancy L_{10IPC} (40 °C) see page 17	Curve
Type		m³/h	CFM	VDC	VDC	dB(A)	Bel(A)	□/■	Watts	rpm	°C	Hours	Hours	
25°C	4312 MT	65	38	12	8...15	25	3,9	■	1,1	1 100	-20...+65	70 000 / 40 000	117 500	①
50°C		138	81			39	5,3		3,3	2 300				②
25°C	4312 T	85	50	12	8...13,2	29	4,2	■	1,7	1 400	-20...+65	65 000 / 35 000	110 000	③
50°C		170	100			45	5,8		5,0	2 800				④
30°C	4314 T	85	50	24	18...32	29	4,2	■	1,6	1 400	-20...+65	65 000 / 35 000	110 000	③
50°C		170	100			45	5,8		4,8	2 800				④

Subject to alternations

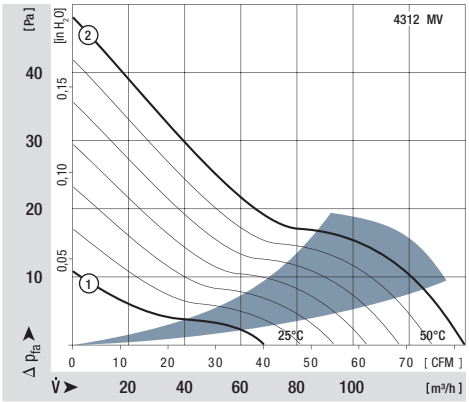

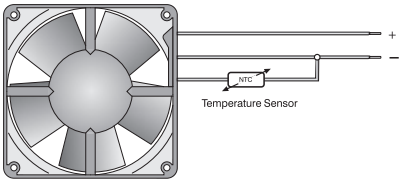

The temperature sensor for controlling the motor speed is not included in delivery. Temperature sensor LZ 370 see accessories.

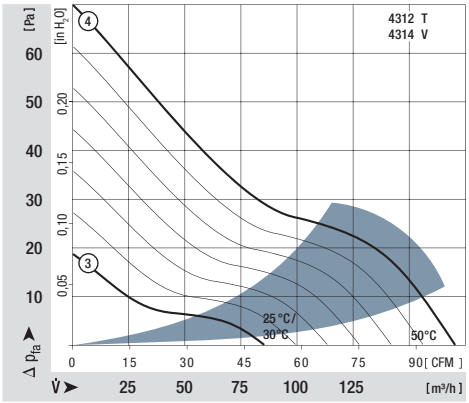

Rotor protrusion max. 0.4 mm.

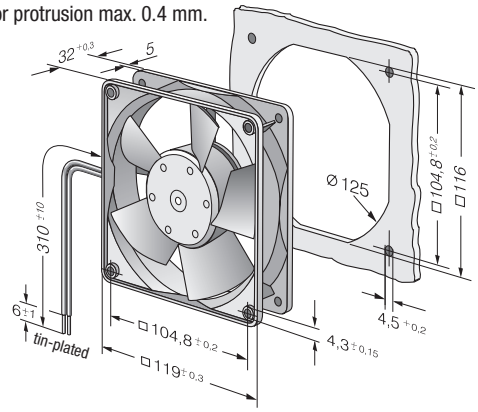

max. 205 m³/h

DC axial fans

Series 4400 119 x 119 x 38 mm

- **Material:** Housing: GRP[1)] (PBT)
  Impeller: GRP[1)] (PA)
- **Direction of air flow:** Exhaust over struts
- **Direction of rotation:** Clockwise, seen on rotor
- **Connection:** Via single wires AWG 24, TR 64
- **Mass:** 270 g

- **Possible special versions:**
  (See chapter DC fans - specials)
  - Speed signal
  - Go / No-go alarm
  - Alarm with limit speed
  - External temperature sensor
  - Internal temperature sensor
  - PWM control input
  - Analogue control input
  - Protection against moisture
  - Type of protection: IP 54

1) Fibreglass-reinforced plastic

Nominal data	Air flow	Air flow	Nominal voltage	Voltage range	Sound pressure level	Sound power level	Sintec sleeve bearings / Ball bearings	Input power	Nominal speed	Temperature range	Service life L_{10} (40 °C) ebm-papst Standard / Service life L_{10} (T_{max}) ebm-papst Standard	Life expectancy L_{10IPC} (40 °C) see page 17	Curve
Type	**m³/h**	**CFM**	**VDC**	**VDC**	**dB(A)**	**Bel(A)**	□/■	**Watts**	**rpm**	**°C**	**Hours**	**Hours**	
4412 L	150	88	**12**	7...14	37	5,0	■	2,2	2 700	-20...+80	67 500 / 22 500	115 000	③
4412 ML	168	99	**12**	7...15	40	5,1	■	3,0	3 000	-20...+80	67 500 / 22 500	115 000	④
4412 M	184	108	**12**	7...14	42	5,3	■	3,8	3 300	-20...+75	65 000 / 25 000	110 000	⑤
4412 N	205	121	**12**	7...14	46	5,6	■	5,3	3 650	-20...+70	62 500 / 30 000	105 000	⑥
4414 L3	100	59	**24**	12...28	26	4,0	■	1,0	1 800	-20...+80	75 500 / 22 500	127 500	①
4414 LL	124	73	**24**	12...28	33	4,5	■	1,6	2 250	-20...+80	70 000 / 22 500	117 500	②
4414 L	150	88	**24**	18...28	37	5,0	■	2,4	2 700	-20...+80	67 500 / 22 500	115 000	③
4414 ML	168	99	**24**	12...28	40	5,1	■	3,2	3 000	-20...+80	67 500 / 22 500	115 000	④
4414 M	184	108	**24**	18...28	42	5,3	■	4,1	3 300	-20...+75	65 000 / 25 000	110 000	⑤
4414 N	205	121	**24**	18...28	46	5,6	■	5,4	3 650	-20...+70	62 500 / 30 000	105 000	⑥
4418 L	150	88	**48**	36...60	37	5,0	■	2,5	2 700	-20...+75	67 500 / 27 500	115 000	③
4418 ML	168	99	**48**	36...60	40	5,1	■	3,2	3 000	-20...+75	67 500 / 27 500	115 000	④
4418 M	184	108	**48**	36...60	42	5,3	■	4,2	3 300	-20...+70	65 000 / 32 500	110 000	⑤
4418 N	205	121	**48**	36...60	46	5,6	■	5,4	3 650	-20...+70	62 500 / 30 000	105 000	⑥

Subject to alternations

Further variants can be found on page 59.

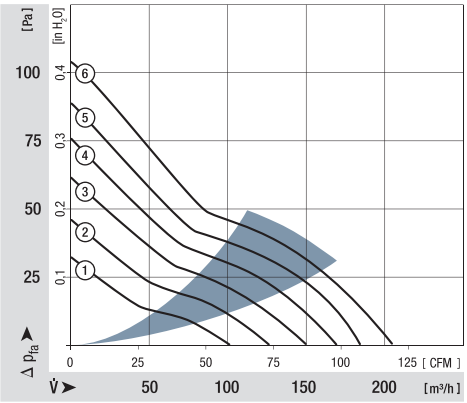

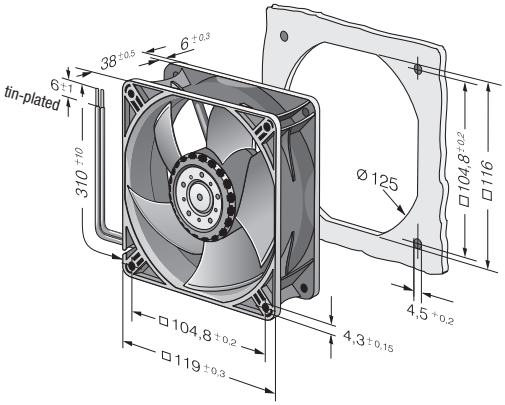

Guard grilles
from p. 238

ebmpapst

max. 285 m³/h

DC axial fans

Series 4400 119 x 119 x 38 mm

- **Material:** Housing: GRP[1)] (PBT)
  Impeller: GRP[1)] (PA)
- **Direction of air flow:** Exhaust over struts
- **Direction of rotation:** Clockwise, seen on rotor
- **Connection:** Via single wires AWG 24, TR 64
- **Mass:** 270 g

- **Possible special versions:**
  (See chapter DC fans - specials)
  - Speed signal
  - Go / No-go alarm
  - Alarm with limit speed
  - External temperature sensor
  - Internal temperature sensor
  - PWM control input
  - Analogue control input
  - Protection against moisture
  - Type of protection: IP 54

1) Fibreglass-reinforced plastic

Nominal data	Air flow	Air flow	Nominal voltage	Voltage range	Sound pressure level	Sound power level	Sintec sleeve bearings / Ball bearings	Input power	Nominal speed	Temperature range	Service life L_{10} (40 °C) ebm-papst Standard / Service life L_{10} (T_{max}) ebm-papst Standard	Life expectancy L_{10IPC} (40 °C) see page 17	Curve
Type	**m³/h**	**CFM**	**VDC**	**VDC**	**dB(A)**	**Bel(A)**	□/■	**Watts**	**rpm**	**°C**	**Hours**	**Hours**	
4412 H	240	141	**12**	7...14	50	6,0	■	8,6	4 300	-20...+70	57 500 / 27 500	92 500	①
4412/2 HHP	285	168	**12**	7...14,5	55	6,4	■	13,0	5 000	-20...+70	50 000 / 25 000	85 000	②
4414 H	240	141	**24**	18...28	50	6,0	■	8,6	4 300	-20...+70	57 500 / 27 500	92 500	①
4414 HH	285	165	**24**	16...28	55	6,4	■	14,0	5 000	-20...+70	50 000 / 25 000	85 000	②
4414/2 HHP	285	168	**24**	18...28	55	6,4	■	12,0	5 000	-20...+70	50 000 / 25 000	85 000	②
4418 H	240	141	**48**	36...60	50	6,0	■	8,6	4 300	-20...+70	57 500 / 27 500	92 500	①
4418/2 HHP	285	168	**48**	36...60	55	6,4	■	13,0	5 000	-20...+70	50 000 / 25 000	85 000	②

Subject to alternations

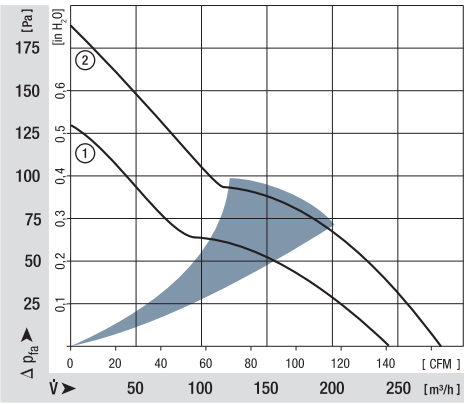

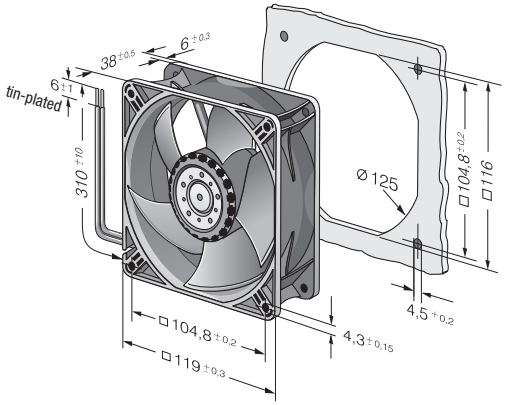

Guard grilles
from p. 238

max. 237 m³/h

DC axial fans

Series 4100 N 119 x 119 x 38 mm

- **Material:** Housing: Die-cast aluminium
  Impeller: GRP[1)] (PA)
- **Direction of air flow:** Intake over struts
- **Direction of rotation:** Clockwise, seen on rotor
- **Connection:** On flat connectors, 2.8 x 0.5 mm
  Also available with wires as an option
- **Highlights:** Housing with grounding lug for screw M4 x 8 (Torx)
- **Mass:** 390 g

- **Possible special versions:**
  (See chapter DC fans - specials)
  - Speed signal
  - Go / No-go alarm
  - Alarm with limit speed
  - External temperature sensor
  - Internal temperature sensor
  - PWM control input
  - Analogue control input
  - Protection against moisture
  - Protection against salt fog
  - Type of protection: IP 54 / IP 68

1) Fibreglass-reinforced plastic

Nominal data	Air flow	Air flow	Nominal voltage	Voltage range	Sound pressure level	Sound power level	Sintec sleeve bearings / Ball bearings	Input power	Nominal speed	Temperature range	Service life L_{10} (40 °C) ebm-papst Standard / Service life L_{10} (T_{max}) ebm-papst Standard	Life expectancy L_{10IPC} (40 °C) see page 17	Curve
Type	**m³/h**	**CFM**	**VDC**	**VDC**	**dB(A)**	**Bel(A)**	□/■	**Watts**	**rpm**	**°C**	**Hours**	**Hours**	
4182 NGX	160	94	**12**	6...15	44	5,3	□	3,7	2 800	-20...+75	85 000 / 37 500	142 500	①
4182 NX	180	106	**12**	6...15	49	5,7	■	4,9	3 200	-30...+75	85 000 / 37 500	142 500	②
4182 NXH	237	140	**12**	7...14	57	6,5	■	11,0	4 400	-30...+55	70 000 / 50 000	117 500	③
4184 NGX	160	94	**24**	12...31,5	44	5,3	□	3,3	2 800	-20...+75	85 000 / 37 500	142 500	①
4184 NXM	160	94	**24**	12...31,5	44	5,3	■	3,2	2 800	-30...+75	85 000 / 37 500	142 500	①
4184 NX	180	106	**24**	12...31,5	49	5,7	■	4,9	3 200	-30...+70	85 000 / 42 500	142 500	②
4184 NXH	237	140	**24**	12...28	57	6,5	■	11,0	4 400	-30...+70	70 000 / 35 000	117 500	③
4188 NGX	160	94	**48**	36...60	44	5,3	□	3,6	2 800	-20...+75	85 000 / 37 500	142 500	①
4188 NXM	160	94	**48**	36...60	44	5,3	■	3,5	2 800	-30...+75	85 000 / 37 500	142 500	①

Subject to alternations

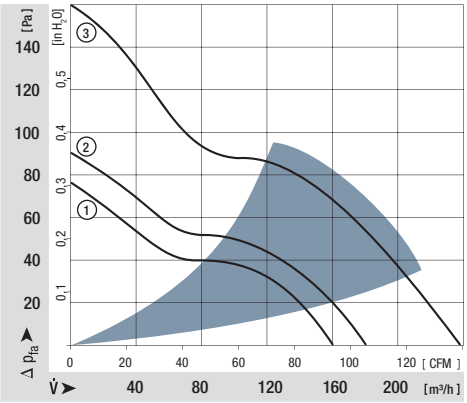

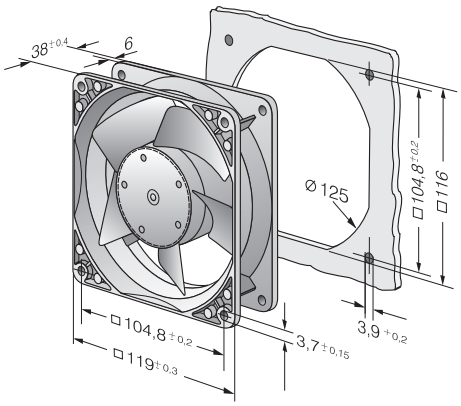

Guard grilles from p. 238

Connection cables from p. 251

ebmpapst

max. 440 m³/h

DC axial fans

Series 4100 N High Performance 119 x 119 x 38 mm

- **Material:** Housing: Die-cast aluminium
  Impeller: GRP[1)] (PA)
- **Direction of air flow:** Intake over struts
- **Direction of rotation:** Clockwise, seen on rotor
- **Connection:** Via single wires AWG 22 UL 1007, TR 64
- **Highlights:** Housing with grounding lug for screw M4 x 8 (Torx)
- **Mass:** 390 g

- **Possible special versions:**
  (See chapter DC fans - specials)
  - Speed signal
  - Go / No-go alarm
  - Alarm with limit speed
  - External temperature sensor
  - Internal temperature sensor
  - PWM control input
  - Analogue control input
  - Protection against moisture
  - Protection against salt fog
  - Type of protection: IP 54 / IP 68

1) Fibreglass-reinforced plastic

Nominal data	Air flow	Air flow	Nominal voltage	Voltage range	Sound pressure level	Sound power level	Sintec sleeve bearings / Ball bearings	Input power*	Nominal speed	Temperature range	Service life L_{10} (40 °C) ebm-papst Standard / Service life L_{10} (T_{max}) ebm-papst Standard	Life expectancy L_{10IPC} (40 °C) see page 17	Curve
Type	**m³/h**	**CFM**	**VDC**	**VDC**	**dB(A)**	**Bel(A)**	□/■	**Watts**	**rpm**	**°C**	**Hours**	**Hours**	
4112 NHH	260	153	**12**	9...15	60	6,8	■	13,3	5 000	-20...+65	70 000 / 55 000	117 500	①
4112 NH3	310	182	**12**	9...15	65	7,2	■	21,6	6 000	-20...+65	65 000 / 37 500	110 000	②
4112 NH4	355	209	**12**	9...14	67	7,4	■	32,0	6 800	-20...+65	62 500 / 35 000	105 000	③
4114 NHH	260	153	**24**	16...30	60	6,8	■	12,4	5 000	-20...+65	70 000 / 52 500	117 500	①
4114 NH3	310	182	**24**	16...30	65	7,2	■	19,5	6 000	-20...+65	65 000 / 37 500	110 000	②
4114 NH4	355	209	**24**	16...30	67	7,4	■	30,0	6 800	-20...+65	62 500 / 35 000	105 000	③
4114 NH5 *S-Force*	390	230	**24**	16...30	70	7,6	■	45,0*	7 500	-20...+65	62 500 / 35 000	105 000	④
4114 NH6 *S-Force*	440	259	**24**	16...30	73	8,1	■	65,0*	8 400	-20...+65	60 000 / 32 500	102 500	⑤
4118 NHH	260	153	**48**	36...60	60	6,8	■	12,0	5 000	-20...+65	70 000 / 52 500	117 500	①
4118 NH3	310	182	**48**	36...60	65	7,2	■	20,0	6 000	-20...+65	65 000 / 37 500	110 000	②
4118 NH4	355	209	**48**	36...60	67	7,4	■	28,0	6 800	-20...+65	62 500 / 35 000	105 000	③
4118 NH5 *S-Force*	390	230	**48**	36...60	70	7,6	■	45,0*	7 500	-20...+65	62 500 / 35 000	105 000	④
4118 NH6 *S-Force*	440	259	**48**	36...60	73	8,1	■	62,0*	8 400	-20...+65	60 000 / 32 500	102 500	⑤

Subject to alternations

* Input power at free air flow, these values can be significantly higher in the operating point.

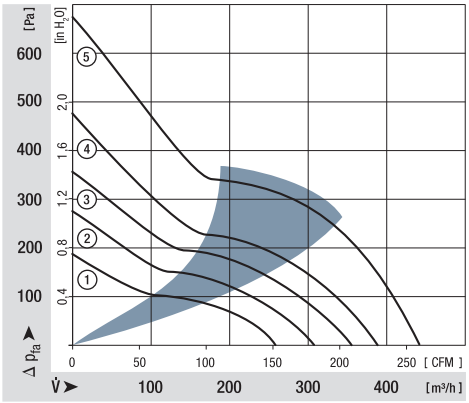

*** Input power - in operation**

Fan type	optimum operating range (W)
4114 NH5	55
4114 NH6	95
4118 NH5	55
4118 NH6	95

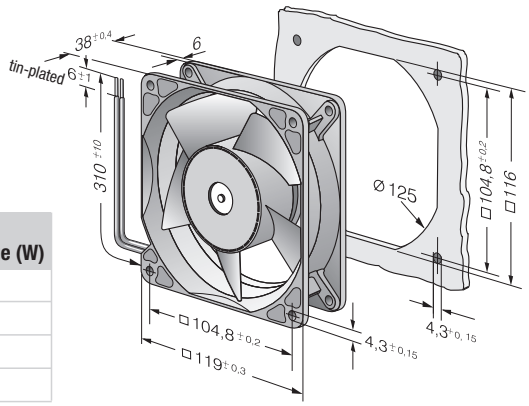

max. 570 m³/h

S-Force

DC axial fans

Series 4100 N High Performance 119 x 119 x 38 mm

- **Material:** Housing: Die-cast aluminium
  Impeller: GRP[1)] (PA)
- **Direction of air flow:** Intake over struts
- **Direction of rotation:** Clockwise, seen on rotor
- **Connection:** Via single wires AWG 18, 20 or AWG 22, TR 64, speed signal and control input AWG 22
- **Highlights:** 3-phase fan drive with very smooth running and high efficiency
  Housing with grounding lug for screw M4 x 8 (Torx)
- **Mass:** 425 g

1) Fibreglass-reinforced plastic

- **Possible special versions:**
  (See chapter DC fans - specials)
  - Speed signal
  - Go / No-go alarm
  - Alarm with limit speed
  - External temperature sensor
  - Internal temperature sensor
  - PWM control input
  - Analogue control input
  - Protection against moisture
  - Protection against salt fog

Nominal data	Air flow	Air flow	Nominal voltage	Voltage range	Sound pressure level	Sound power level	Sintec sleeve bearings / Ball bearings	Input power**	Nominal speed	Temperature range	Service life L_{10} (40 °C) ebm-papst Standard / Service life L_{10} (T_{max}) ebm-papst Standard	Life expectancy L_{10IPC} (40 °C) see page 17	Curve
Type	**m³/h**	**CFM**	**VDC**	**VDC**	**dB(A)**	**Bel(A)**	□/■	**Watts**	**rpm**	**°C**	**Hours**	**Hours**	
4114 N/2H7P	500	294	**24**	16...30	76	8,5	■	90	9 500	-20...+75	57 500 / 25 000	97 500	①
4114 N/2H8P	570	336	**24**	16...30	78	8,9	■	120	11 000	-20...+75	55 000 / 22 500	92 500	②
4118 N/2H7P	500	294	**48**	36...60*	76	8,5	■	90	9 500	-20...+75	57 500 / 25 000	97 500	①
4118 N/2H8P	570	336	**48**	36...60*	78	8,9	■	120	11 000	-20...+75	55 000 / 22 500	92 500	②

Subject to alternations

* 36...72 VDC on request.

Speed control range from 500 rpm up to maximum nominal speed. Stationary at 0 % PWM, maximum speed at sensor break.
To attain the specified service life, an external capacitor must be wired between the plus and minus strands.
Please note the wiring suggestion on page 16.
** Input power at free air flow, these values can be significantly higher in the operating point.

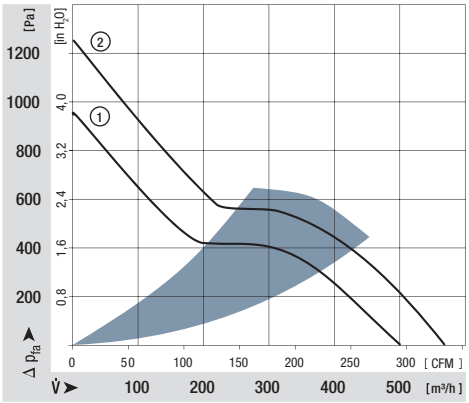

**** Input power - in operation**

Fan type	optimum operating range (W)
4114 NH7P	100
4114 NH8P	160
4118 NH7P	100
4118 NH8P	160

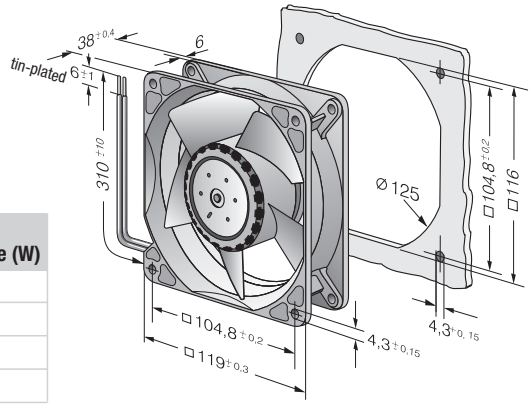

Guard grilles
from p. 238

ebmpapst

max. 280 m³/h

DC diagonal fans

Series DV 4100 119 x 119 x 38 mm

- **Material:** Housing: GRP[1)] (PBT)
  Available in Die-cast aluminium
  Impeller: GRP[1)] (PA)
- **Direction of air flow:** Exhaust over struts
- **Direction of rotation:** Counter-clockwise, seen on rotor
- **Connection:** Via single wires AWG 22, TR 64
- **Highlights:** Housing with grounding lug for screw M4 x 8 (Torx)
- **Mass:** 375 g
  (with metal housing: 455 g)

1) Fibreglass-reinforced plastic

- **Possible special versions:**
  (See chapter DC fans - specials)
  - Speed signal
  - Go / No-go alarm
  - Alarm with limit speed
  - External temperature sensor
  - Internal temperature sensor
  - PWM control input
  - Analogue control input
  - Protection against moisture
  - Protection against salt fog
  - Type of protection: IP 54 / IP 68

Nominal data	Air flow	Air flow	Nominal voltage	Voltage range	Sound pressure level	Sound power level	Sintec sleeve bearings / Ball bearings	Input power*	Nominal speed	Temperature range	Service life L_{10} (40 °C) ebm-papst Standard / Service life L_{10} (T_{max}) ebm-papst Standard	Life expectancy L_{10IPC} (40 °C) see page 17	Curve
Type	**m³/h**	**CFM**	**VDC**	**VDC**	**dB(A)**	**Bel(A)**	□/■	**Watts**	**rpm**	**°C**	**Hours**	**Hours**	
DV 4112 N	280	165	**12**	9...15	61	6,9	■	21,0	6 000	-20...+65	70 000 / 40 000	117 500	①
DV 4114 N	280	165	**24**	16...30	61	6,9	■	20,5	6 000	-20...+65	70 000 / 40 000	117 500	①
DV 4118 N	280	165	**48**	36...60	61	6,9	■	20,0	6 000	-20...+65	70 000 / 40 000	117 500	①

Subject to alternations

* Input power at free air flow, these values can be significantly higher in the operating point.

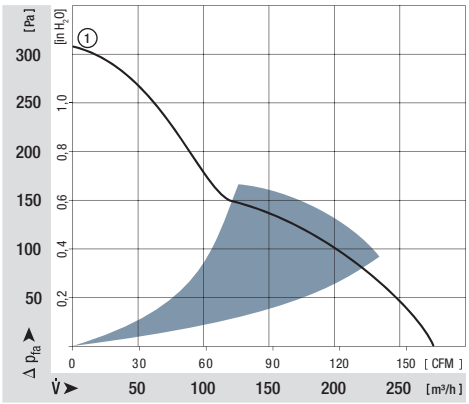

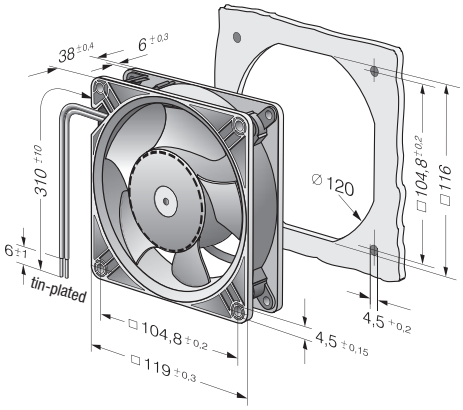

max. 340 m³/h

DC axial fans

Series 5200 N 127 x 127 x 38 mm

- **Material:** Housing: GRP[1)] (PBT)
  Impeller: GRP[1)] (PA)
- **Direction of air flow:** Exhaust over struts
- **Direction of rotation:** Counter-clockwise, seen on rotor
- **Connection:** Via single wires AWG 22, TR 64
- **Mass:** 310 g

1) Fibreglass-reinforced plastic

- **Possible special versions:**
  (See chapter DC fans - specials)
  - Speed signal
  - Go / No-go alarm
  - Alarm with limit speed
  - External temperature sensor
  - Internal temperature sensor
  - PWM control input
  - Analogue control input
  - Protection against moisture
  - Protection against salt fog
  - Type of protection: IP 54 / IP 68

Nominal data	Air flow	Air flow	Nominal voltage	Voltage range	Sound pressure level	Sound power level	Sintec sleeve bearings / Ball bearings	Input power**	Nominal speed	Temperature range	Service life L_{10} (40 °C) ebm-papst Standard / Service life L_{10} (T_{max}) ebm-papst Standard	Life expectancy L_{10IPC} (40 °C) see page 17	Curve
Type	**m³/h**	**CFM**	**VDC**	**VDC**	**dB(A)**	**Bel(A)**	□/■	**Watts**	**rpm**	**°C**	**Hours**	**Hours**	
5212 NM	187	110	**12**	7...14,5	43	5,3	■	4,1	2 750	-20...+75	62 500 / 27 500	105 000	①
5212 NN	216	127	**12**	7...14	46	5,6	■	6,2	3 150	-20...+70	57 500 / 25 000	97 500	②
5212 NH	252	148	**12**	7...14	51	6,0	■	9,8	3 650	-20...+70	45 000 / 22 500	75 000	③
5212 NHH*	340	200	**12**	9...15	58	6,6	■	19,0	4 900	-20...+65	45 000 / 25 000	75 000	④
5214 NM	187	110	**24**	12...28	43	5,3	■	4,6	2 750	-20...+75	62 500 / 27 500	105 000	①
5214 NN	216	127	**24**	12...28	46	5,6	■	6,0	3 150	-20...+75	57 500 / 25 000	97 500	②
5214 NH	252	148	**24**	12...28	51	6,0	■	9,8	3 650	-20...+70	45 000 / 22 500	75 000	③
5214 NHH*	340	200	**24**	16...30	58	6,6	■	17,5	4 900	-20...+65	45 000 / 25 000	75 000	④
5218 NM	187	110	**48**	36...56	43	5,3	■	4,5	2 750	-20...+75	62 500 / 27 500	105 000	①
5218 NN	216	127	**48**	36...56	46	5,6	■	6,2	3 150	-20...+70	57 500 / 32 500	97 500	②
5218 NH	252	148	**48**	36...56	51	6,0	■	9,6	3 650	-20...+55	45 000 / 32 500	75 000	③
5218 NHH*	340	200	**48**	36...60	58	6,6	■	18,0	4 900	-20...+65	45 000 / 25 000	75 000	④

Subject to alternations

** Input power at free air flow, these values can be significantly higher in the operating point.

***Models NHH:** Fan housing with moulded-in spacers.

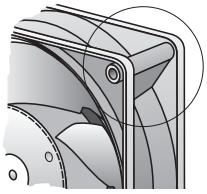

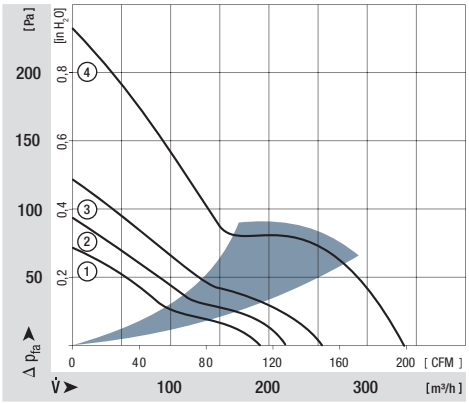

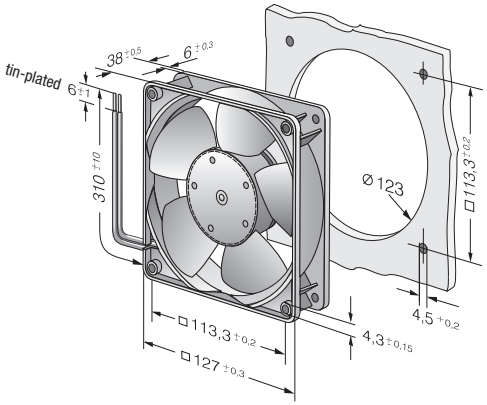

Guard grilles
from p. 238

ebmpapst

max. 320 m³/h

DC diagonal fans

Series DV 5200 127 x 127 x 38 mm

- **Material:** Housing: GRP[1)] (PBT)
  Available in Die-cast aluminium
  Metal flange
  Impeller: GRP[1)] (PA)
- **Direction of air flow:** Exhaust over struts
- **Direction of rotation:** Counter-clockwise, seen on rotor
- **Connection:** Via single wires AWG 22, TR 64
- **Highlights:** Housing with grounding lug for screw M4 x 8 (Torx)
- **Mass:** 415 g (with metal housing: 490 g)

1) Fibreglass-reinforced plastic

- **Possible special versions:**
  (See chapter DC fans - specials)
  - Speed signal
  - Go / No-go alarm
  - Alarm with limit speed
  - External temperature sensor
  - Internal temperature sensor
  - PWM control input
  - Analogue control input
  - Protection against moisture
  - Protection against salt fog
  - Type of protection: IP 54 / IP 68

Nominal data	Air flow	Air flow	Nominal voltage	Voltage range	Sound pressure level	Sound power level	Sintec sleeve bearings / Ball bearings	Input power*	Nominal speed	Temperature range	Service life L_{10} (40 °C) ebm-papst Standard / Service life L_{10} (T_{max}) ebm-papst Standard	Life expectancy L_{10IPC} (40 °C) see page 17	Curve
Type	**m³/h**	**CFM**	**VDC**	**VDC**	**dB(A)**	**Bel(A)**	□/■	**Watts**	**rpm**	**°C**	**Hours**	**Hours**	
DV 5212 N	270	159	**12**	9...15	56	6,4	■	21,0	5 000	-20...+65	70 000 / 40 000	117 500	①
DV 5214 N	270	159	**24**	16...30	56	6,4	■	20,4	5 000	-20...+65	70 000 / 40 000	117 500	①
DV 5218 N	270	159	**48**	36...60	56	6,4	■	18,5	5 000	-20...+65	70 000 / 40 000	117500	①
Model comes standard with speed signal and PWM control input. Other versions by request.													
DV 5214/2 HP	320	188	**24**	16...30	62	7,2	■	38,5	6 000	-20...+65	62 500 / 35 000	105 000	②

Subject to alternations

Speed control range from 1000 rpm up to maximum nominal speed. Stationary at 0 % PWM, maximum speed at sensor break.
* Input power at free air flow, these values can be significantly higher in the operating point.

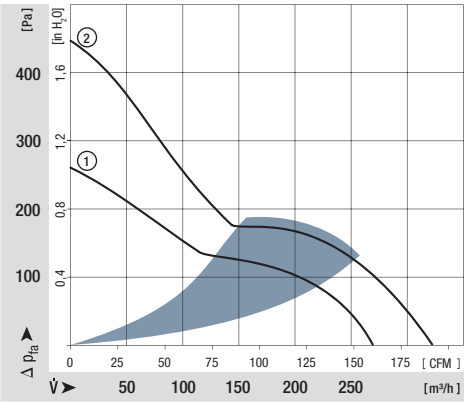

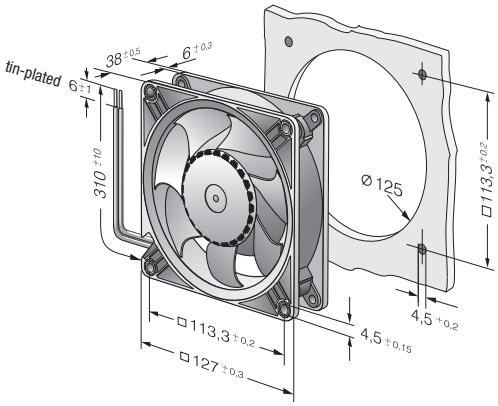

max. 260 m³/h

DC axial fans

Series 5100 N 135 x 135 x 38 mm

- **Material:** Housing: Die-cast aluminium
  Impeller: Painted sheet steel
- **Direction of air flow:** Exhaust over struts
- **Direction of rotation:** Counter-clockwise, seen on rotor
- **Connection:** Via single wires AWG 22, TR 64
- **Highlights:** Housing with grounding lug for screw M4 x 8 (Torx)
  48 V version incl. screws
- **Mass:** 650 g

- **Possible special versions:**
  (See chapter DC fans - specials)
  - Speed signal
  - Go / No-go alarm
  - Alarm with limit speed
  - External temperature sensor
  - Internal temperature sensor
  - PWM control input
  - Analogue control input
  - Protection against moisture
  - Protection against salt fog
  - Type of protection: IP 54

1) Fibreglass-reinforced plastic

Nominal data	Air flow	Air flow	Nominal voltage	Voltage range	Sound pressure level	Sound power level	Sintec sleeve bearings / Ball bearings	Input power*	Nominal speed	Temperature range	Service life L_{10} (40 °C) ebm-papst Standard / Service life L_{10} (T_{max}) ebm-papst Standard	Life expectancy L_{10IPC} (40 °C) see page 17	Curve
Type	**m³/h**	**CFM**	**VDC**	**VDC**	**dB(A)**	**Bel(A)**	□/■	**Watts**	**rpm**	**°C**	**Hours**	**Hours**	
5112 N	260	153	**12**	6...15	48	6,1	■	9,5	2 900	-25...+72	80 000 / 37 500	135 000	①
5114 N	260	153	**24**	12...30	48	6,1	■	9,5	2 900	-25...+72	80 000 / 37 500	135 000	①
5118 N	260	153	**48**	24...60	48	6,1	■	9,5	2 900	-25...+72	80 000 / 37 500	135 000	①

Subject to alternations

* Input power at free air flow, these values can be significantly higher in the operating point.

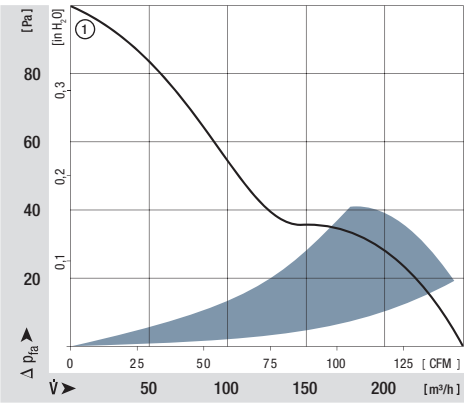

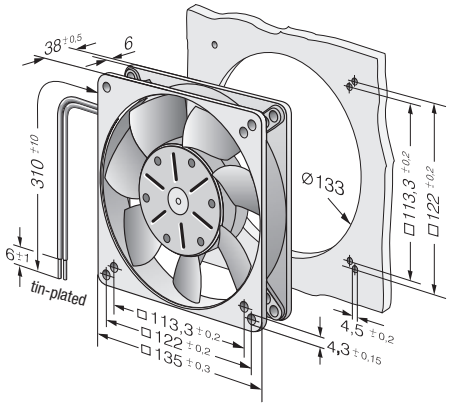

Guard grilles
from p. 238

ebmpapst

max. 340 m³/h

S-Force

DC axial fans

Series 5300 140 x 140 x 51 mm

- **Material:** Housing: Die-cast aluminium
  Impeller: GRP[1)] (PA)
- **Direction of air flow:** Intake over struts
- **Direction of rotation:** Counter-clockwise, seen on rotor
- **Connection:** Via single wires AWG 22, TR 64
- **Highlights:** Housing with grounding lug for screw M4 x 8 (Torx)
- **Mass:** 900 g

- **Possible special versions:**
  (See chapter DC fans - specials)
  - Speed signal
  - Go / No-go alarm
  - Alarm with limit speed
  - External temperature sensor
  - Internal temperature sensor
  - PWM control input
  - Analogue control input
  - Protection against moisture
  - Protection against salt fog
  - Type of protection: IP 54

1) Fibreglass-reinforced plastic

Nominal data	Air flow	Air flow	Nominal voltage	Voltage range	Sound pressure level	Sound power level	Sintec sleeve bearings / Ball bearings	Input power*	Nominal speed	Temperature range	Service life L_{10} (40 °C) ebm-papst Standard / Service life L_{10} (T_{max}) ebm-papst Standard	Life expectancy L_{10IPC} (40 °C) see page 17	Curve
Type	**m³/h**	**CFM**	**VDC**	**VDC**	**dB(A)**	**Bel(A)**	□/■	**Watts**	**rpm**	**°C**	**Hours**	**Hours**	
5314/2 HP	340	200	**24**	16...28	64	7,2	■	28,4	5 000	-20...+65	77 500 / 40 000	130 000	①
5318/2 HP	340	200	**48**	36...72	64	7,2	■	27	5 000	-20...+65	77 500 / 40 000	130 000	①

Subject to alternations

Speed control range from 700 rpm up to maximum nominal speed. Stationary at 0 % PWM, maximum speed at sensor break.
* Input power at free air flow, these values can be significantly higher in the operating point.

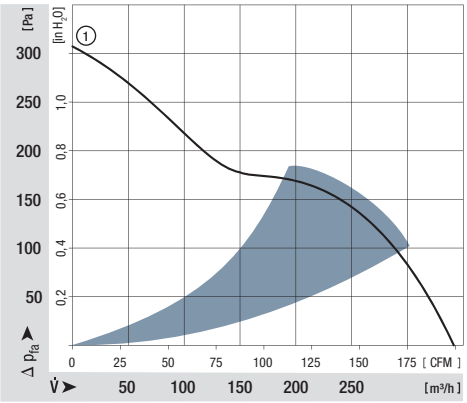

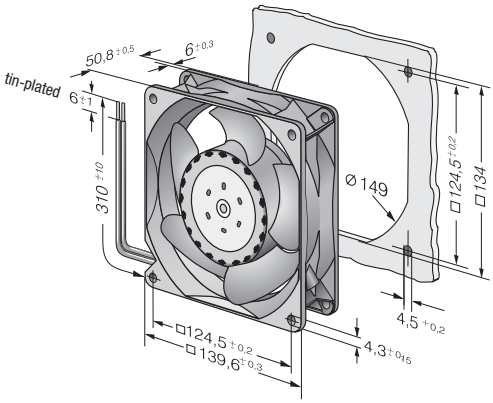

max. 670 m³/h

S-Force

DC axial fans

Series 5300 TD 140 x 140 x 51 mm

- **Material:** Housing: Die-cast aluminium
  Impeller: GRP[1)] (PA)
- **Direction of air flow:** Intake over struts
- **Direction of rotation:** Counter-clockwise, seen on rotor
- **Connection:** Via single wires AWG 20 and AWG 22, TR 64
- **Highlights:** 3-phase fan drive with very smooth running and high efficiency
- **Mass:** 900 g

1) Fibreglass-reinforced plastic

- **Possible special versions:**
  (See chapter DC fans - specials)
  - Speed signal
  - Go / No-go alarm
  - Alarm with limit speed
  - External temperature sensor
  - Internal temperature sensor
  - PWM control input
  - Analogue control input
  - Multi-option control input
  - Protection against moisture
  - Protection against salt fog
  - Type of protection: IP 54 / IP 68

Nominal data	Air flow	Air flow	**Nominal voltage**	Voltage range	Sound pressure level	Sound power level	Sintec sleeve bearings / Ball bearings	Input power*	Nominal speed	Temperature range	Service life L_{10} (40 °C) ebm-papst Standard / Service life L_{10} (T_{max}) ebm-papst Standard	Life expectancy L_{10IPC} (40 °C) see page 17	Curve
Type	**m³/h**	**CFM**	**VDC**	**VDC**	**dB(A)**	**Bel(A)**	□/■	**Watts**	**rpm**	**°C**	**Hours**	**Hours**	
5312/2 TDHP	410	241	**12**	8...16	70	7,7	■	43	6 000	-20...+70	70 000 / 35 000	117 500	①
5314/2 TDHP	410	241	**24**	16...36	70	7,7	■	42	6 000	-20...+70	70 000 / 35 000	117 500	①
5314/2 TDHHP	490	288	**24**	16...36	75	8,1	■	67	7 000	-20...+70	62 500 / 30 000	105 000	②
5318/2 TDHP	410	241	**48**	36...72	70	7,7	■	42	6 000	-20...+70	70 000 / 35 000	117 500	①
5318/2 TDHHP	490	288	**48**	36...72	75	8,1	■	66	7 000	-20...+70	62 500 / 30 000	105 000	②
5318/2 TDH4P	670	394	**48**	36...72	79	8,8	■	149	9 200	-20...+65	57 500 / 32 500	97 500	③

Subject to alternations

Speed control range from 1000 rpm up to maximum nominal speed. Stationary at 0 % PWM, maximum speed at sensor break.
* Input power at free air flow, these values can be significantly higher in the operating point.

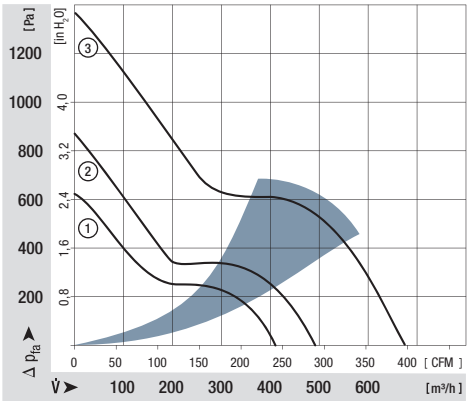

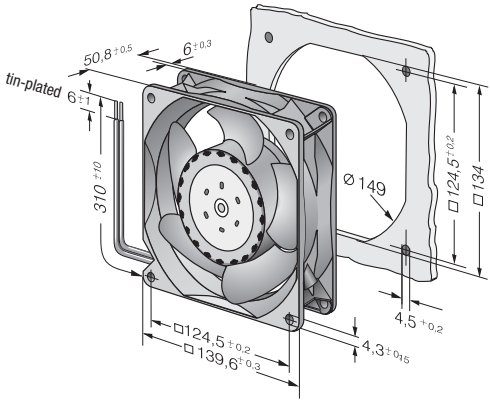

Guard grilles
from p. 238

ebmpapst

max. 360 m³/h

DC axial fans

Series 7100 N Ø 150 x 38 mm

- **Material:** Housing: Die-cast aluminium
  Impeller: Painted sheet steel
- **Direction of air flow:** Exhaust over struts
- **Direction of rotation:** Counter-clockwise, seen on rotor
- **Connection:** Via single wires AWG 22, TR 64
- **Highlights:** Housing with grounding lug for screw M4 x 8 (Torx)
- **Mass:** 620 g

- **Possible special versions:**
  (See chapter DC fans - specials)
  - Speed signal
  - Go / No-go alarm
  - Alarm with limit speed
  - External temperature sensor
  - Internal temperature sensor
  - PWM control input
  - Analogue control input
  - Protection against moisture
  - Protection against salt fog
  - Type of protection: IP 54 / IP 68

Nominal data	Air flow	Air flow	Nominal voltage	Voltage range	Sound pressure level	Sound power level	Sintec sleeve bearings / Ball bearings	Input power*	Nominal speed	Temperature range	Service life L_{10} (40 °C) ebm-papst Standard / Service life L_{10} (T_{max}) ebm-papst Standard	Life expectancy L_{10IPC} (40 °C) see page 17	Curve
Type	**m³/h**	**CFM**	**VDC**	**VDC**	**dB(A)**	**Bel(A)**	□/■	**Watts**	**rpm**	**°C**	**Hours**	**Hours**	
7112 N	308	181	**12**	6...15	53	6,2	■	12,0	2 850	-25...+72	80 000 / 37 500	135 000	①
7114 N	308	181	**24**	12...30	53	6,2	■	12,0	2 850	-25...+72	80 000 / 37 500	135 000	①
7114 NH	360	212	**24**	12...26,5	58	6,7	■	19,0	3 350	-25...+72	75 000 / 35 000	127 500	②
7118 N	308	181	**48**	24...60	53	6,2	■	12,0	2 850	-25...+72	80 000 / 37 500	135 000	①

Subject to alternations

* Input power at free air flow, these values can be significantly higher in the operating point.

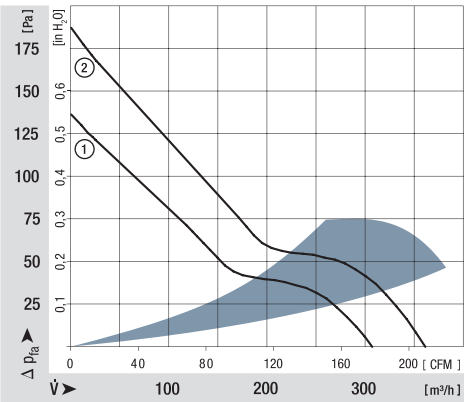

Strand fastened using cable tie; cable tie protrudes 1 mm.

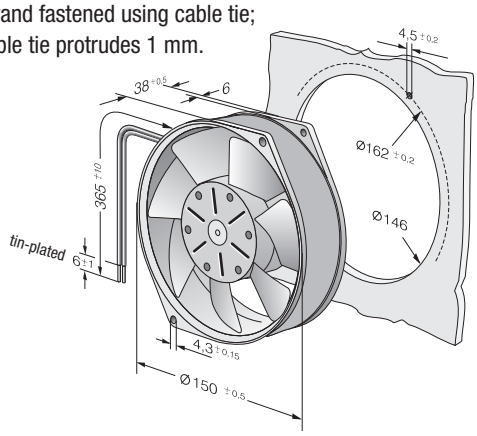

max. 360 m³/h

DC axial fans

Series 7200 N Ø 150 x 55 mm

- **Material:** Housing: Die-cast aluminium
  Impeller: GRP[1)] (PA)
- **Direction of air flow:** Exhaust over struts
- **Direction of rotation:** Counter-clockwise, seen on rotor
- **Connection:** Via single wires AWG 22, TR 64
- **Highlights:** Housing with grounding lug for screw M4 x 8 (Torx)
- **Mass:** 725 g

- **Possible special versions:**
  (See chapter DC fans - specials)
  - Speed signal
  - Go / No-go alarm
  - Alarm with limit speed
  - External temperature sensor
  - Internal temperature sensor
  - PWM control input
  - Analogue control input
  - Protection against moisture
  - Protection against salt fog
  - Type of protection: IP 54 / IP 68

1) Fibreglass-reinforced plastic

Nominal data	Air flow	Air flow	**Nominal voltage**	Voltage range	Sound pressure level	Sound power level	Sintec sleeve bearings / Ball bearings	Input power*	Nominal speed	Temperature range	Service life L_{10} (40 °C) ebm-papst Standard / Service life L_{10} (T_{max}) ebm-papst Standard	Life expectancy L_{10IPC} (40 °C) see page 17	Curve
Type	**m³/h**	**CFM**	**VDC**	**VDC**	**dB(A)**	**Bel(A)**	□/■	**Watts**	**rpm**	**°C**	**Hours**	**Hours**	
7212 N	360	212	**12**	6...15	53	6,2	■	12,0	3 050	-25...+72	80 000 / 37 500	135 000	①
7214 N	360	212	**24**	12...30	53	6,2	■	12,0	3 050	-25...+72	80 000 / 37 500	135 000	①
7218 N	360	212	**48**	24...60	53	6,2	■	12,0	3 050	-25...+72	80 000 / 37 500	135 000	①

Subject to alternations

* Input power at free air flow, these values can be significantly higher in the operating point.

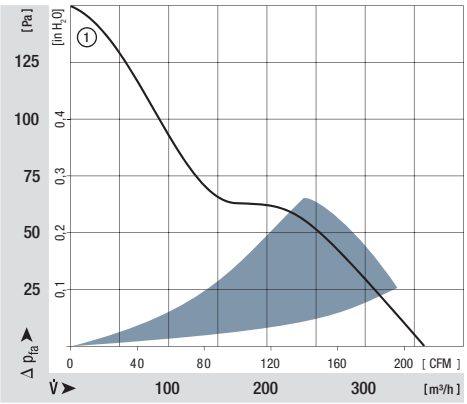

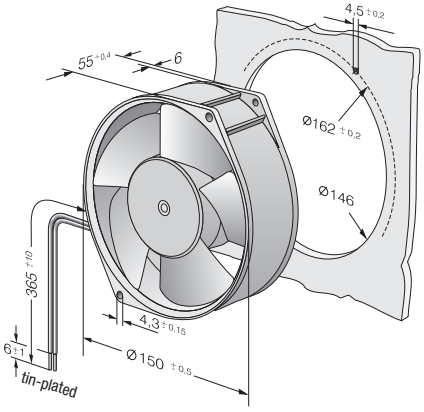

Guard grilles
from p. 238

ebmpapst

max. 350 m³/h

DC axial fans

Series 6100 N 172 x 160 x 52 mm

- **Material:** Housing: GRP[1)] (PBT)
  Impeller: GRP[1)] (PA)
- **Direction of air flow:** Exhaust over struts
- **Direction of rotation:** Counter-clockwise, seen on rotor
- **Connection:** Via single wires AWG 22, TR 64
- **Highlights:** Light and compact plastic housing
- **Mass:** 610 g

- **Possible special versions:**
  (See chapter DC fans - specials)
  - Speed signal
  - Go / No-go alarm
  - Alarm with limit speed
  - External temperature sensor
  - Internal temperature sensor
  - PWM control input
  - Analogue control input
  - Protection against moisture
  - Type of protection: IP 54

1) Fibreglass-reinforced plastic

Nominal data	Air flow	Air flow	Nominal voltage	Voltage range	Sound pressure level	Sound power level	Sintec sleeve bearings / Ball bearings	Input power*	Nominal speed	Temperature range	Service life L_{10} (40 °C) ebm-papst Standard / Service life L_{10} (T_{max}) ebm-papst Standard	Life expectancy L_{10IPC} (40 °C) see page 17	Curve
Type	**m³/h**	**CFM**	**VDC**	**VDC**	**dB(A)**	**Bel(A)**	□/■	**Watts**	**rpm**	**°C**	**Hours**	**Hours**	
6112 NM	350	206	**12**	8...15	49	5,9	■	11	2 850	-20...+70	80 000 / 40 000	135 000	①
6114 NM	350	206	**24**	12...32	49	5,9	■	11	2 850	-20...+70	80 000 / 40 000	135 000	①

Subject to alternations

* Input power at free air flow, these values can be significantly higher in the operating point.

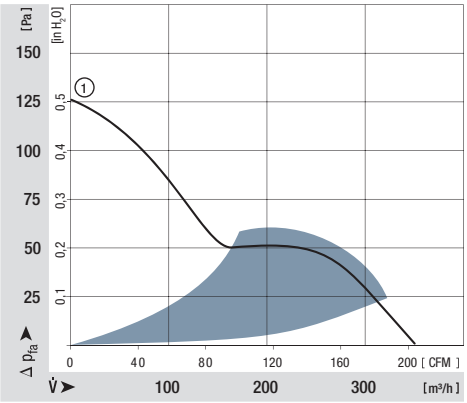

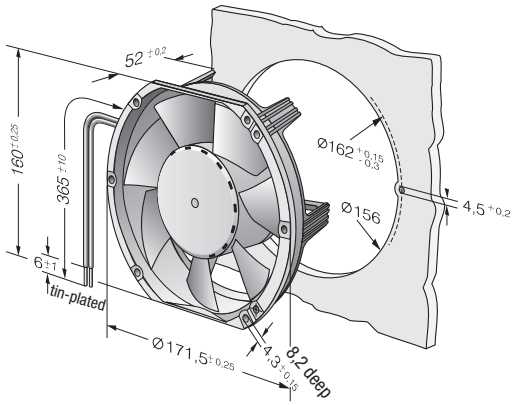

max. 545 m³/h

S-Force

DC axial fans

Series 6300 Ø 172 x 51 mm

- **Material:** Housing: Die-cast aluminium
  Impeller: GRP[1)] (PA)
- **Direction of air flow:** Exhaust over struts
- **Direction of rotation:** Counter-clockwise, seen on rotor
- **Connection:** Via single wires AWG 22, TR 64
- **Highlights:** Housing with grounding lug for screw M4 x 8 (Torx)
- **Mass:** 910 g

- **Possible special versions:**
  (See chapter DC fans - specials)
  - Speed signal
  - Go / No-go alarm
  - Alarm with limit speed
  - External temperature sensor
  - Internal temperature sensor
  - PWM control input
  - Analogue control input
  - Protection against moisture
  - Protection against salt fog
  - Type of protection: IP 54

1) Fibreglass-reinforced plastic

Nominal data	Air flow	Air flow	Nominal voltage	Voltage range	Sound pressure level	Sound power level	Sintec sleeve bearings / Ball bearings	Input power*	Nominal speed	Temperature range	Service life L_{10} (40 °C) ebm-papst Standard / Service life L_{10} (T_{max}) ebm-papst Standard	Life expectancy L_{10IPC} (40 °C) see page 17	Curve
Type	**m³/h**	**CFM**	**VDC**	**VDC**	**dB(A)**	**Bel(A)**	□/■	**Watts**	**rpm**	**°C**	**Hours**	**Hours**	
6314/2 MP	395	232	**24**	16...30	51	6,0	■	14	3 700	-20...+75	82 500 / 32 500	140 000	①
6314/2 NP	470	276	**24**	16...30	56	6,5	■	23	4 400	-20...+70	80 000 / 40 000	135 000	②
6314/2 HP	545	320	**24**	16...30	58	6,9	■	31	5 000	-20...+65	77 500 / 42 500	130 000	③
6318/2 HP	545	320	**48**	36...72	58	6,9	■	32	5 000	-20...+65	77 500 / 42 500	130 000	③

Subject to alternations

Speed control range from 700 rpm up to maximum nominal speed. Stationary at 0 % PWM, maximum speed at sensor break.
* Input power at free air flow, these values can be significantly higher in the operating point.

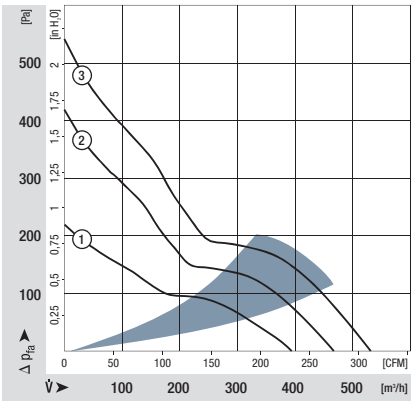

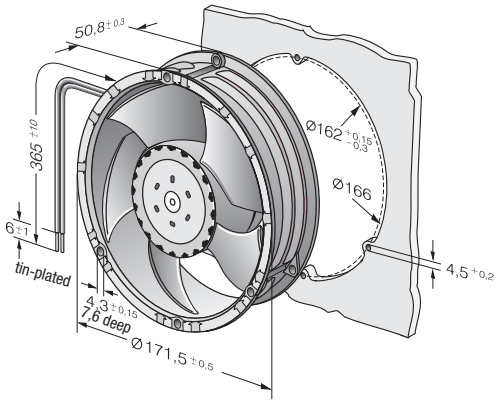

Guard grilles
from p. 238

ebmpapst

max. 930 m³/h

S-Force

DC axial fans

Series 6300 TD Ø 172 x 51 mm

- **Material:** Housing: Die-cast aluminium Impeller: GRP[1] (PA)
- **Direction of air flow:** Exhaust over struts
- **Direction of rotation:** Counter-clockwise, seen on rotor
- **Connection:** Via single wires AWG 18, 20 or AWG 22, TR 64, speed signal and control input AWG 22
- **Highlights:** 3-phase fan drive with very smooth running and high efficiency. Housing with grounding lug for screw M4 x 8 (Torx)
- **Mass:** 910 g

1) Fibreglass-reinforced plastic

- **Possible special versions:** (See chapter DC fans - specials)
  - Speed signal
  - Go / No-go alarm
  - Alarm with limit speed
  - External temperature sensor
  - Internal temperature sensor
  - PWM control input
  - Analogue control input
  - Multi-option control input
  - Protection against moisture
  - Protection against salt fog
  - Type of protection: IP 54

	Nominal data	Air flow	Air flow	Nominal voltage	Voltage range	Sound pressure level	Sound power level	Sintec sleeve bearings / Ball bearings	Input power*	Nominal speed	Temperature range	Service life L_{10} (40 °C) ebm-papst Standard / Service life L_{10} (T_{max}) ebm-papst Standard	Life expectancy L_{10}IPC (40 °C) see page 17	Curve
	Type	m³/h	CFM	VDC	VDC	dB(A)	Bel(A)	□/■	Watts	rpm	°C	Hours	Hours	
	6312/2 TDHP	600	353	**12**	8...16	60	7,3	■	40	5 500	-20...+70	75 000 / 37 500	127 500	②
NEW	6314/2 TDHP-298	600	353	**24**	16...30	60	7,3	■	42	5 500	-20...+65	75 000 / 42 500	127 500	①
	6314/2 TDHP	600	353	**24**	16...36	60	7,3	■	40	5 500	-20...+75	75 000 / 30 000	127 500	②
	6314/2 TDHHP	710	418	**24**	16...36	69	7,9	■	67	7 000	-20...+75	62 500 / 25 000	105 000	③
NEW	6314/2 TDH4P	930	545	**24**	16...36	75	8,4	■	150	9 200	-20...+75	52 500 / 20 000	87 500	⑤
NEW	6318/2 TDHP-299	600	353	**48**	36...60	60	7,3	■	42	5 500	-20...+65	75 000 / 42 500	127 500	①
	6318/2 TDHP	600	353	**48**	36...72	60	7,3	■	40	5 500	-20...+75	75 000 / 30 000	127 500	②
	6318/2 TDHHP	710	418	**48**	36...72	69	7,9	■	67	7 000	-20...+75	62 500 / 25 000	105 000	③
	6318/2 TDH4P	930	545	**48**	36...72	75	8,4	■	150	9 200	-20...+75	52 500 / 20 000	87 500	④

Subject to alternations

Speed control range from 1000 rpm up to maximum nominal speed. Stationary at 0 % PWM, maximum speed at sensor break.
* Input power at free air flow, these values can be significantly higher in the operating point.

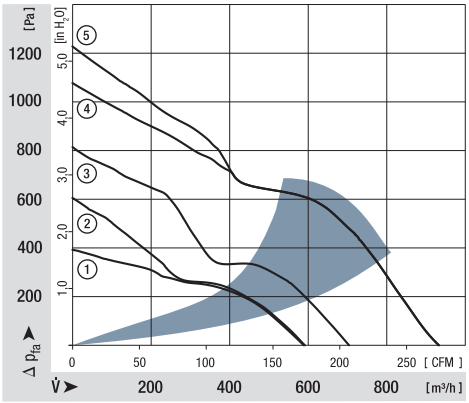

*** Input power - in operation**

Fan type	optimum operating range (W)
6318/2 TDHHP	115
6318/2 TDH4P	270

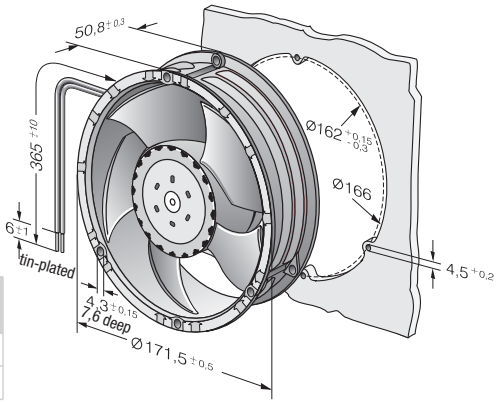

max. 930 m³/h

S-Force

DC axial fans

Series 6300 TD 172 x 160 x 51 mm

- **Material:** Housing: Die-cast aluminium
  Impeller: GRP[1)] (PA)
- **Direction of air flow:** Exhaust over struts
- **Direction of rotation:** Counter-clockwise, seen on rotor
- **Connection:** Via single wires AWG 18, 20 or AWG 22, TR 64, speed signal and control input AWG 22
- **Highlights:** 3-phase fan drive with very smooth running and high efficiency. Housing with grounding lug for screw M4 x 8 (Torx)
- **Mass:** 910 g

1) Fibreglass-reinforced plastic

- **Possible special versions:**
  (See chapter DC fans - specials)
  - Speed signal
  - Go / No-go alarm
  - Alarm with limit speed
  - External temperature sensor
  - Internal temperature sensor
  - PWM control input
  - Analogue control input
  - Multi-option control input
  - Protection against moisture
  - Protection against salt fog
  - Type of protection: IP 54

Nominal data	Air flow	Air flow	**Nominal voltage**	Voltage range	Sound pressure level	Sound power level	Sintec sleeve bearings / Ball bearings	Input power*	Nominal speed	Temperature range	Service life L_{10} (40 °C) ebm-papst Standard / Service life L_{10} (T_{max}) ebm-papst Standard	Life expectancy L_{10IPC} (40 °C) see page 17	Curve
Type	**m³/h**	**CFM**	**VDC**	**VDC**	**dB(A)**	**Bel(A)**	□/■	**Watts**	**rpm**	**°C**	**Hours**	**Hours**	
6314/2 TDHHP-015	710	418	**24**	16...36	69	7,9	■	67	7 000	-20...+75	62 500 / 25 000	105 000	①
6318/2 TDH4P-007	930	546	**48**	36...72	75	8,4	■	150	9 200	-20...+75	52 500 / 20 000	87 500	②

Subject to alternations

Speed control range from 1000 rpm up to maximum nominal speed. Stationary at 0 % PWM, maximum speed at sensor break.
* Input power at free air flow, these values can be significantly higher in the operating point.

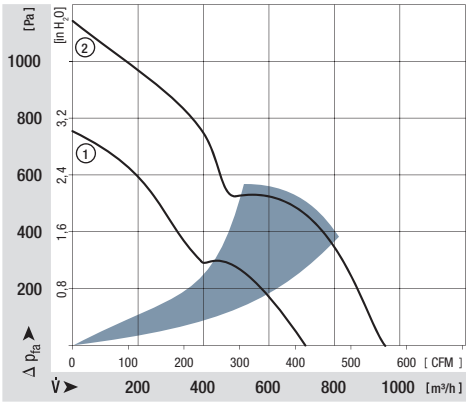

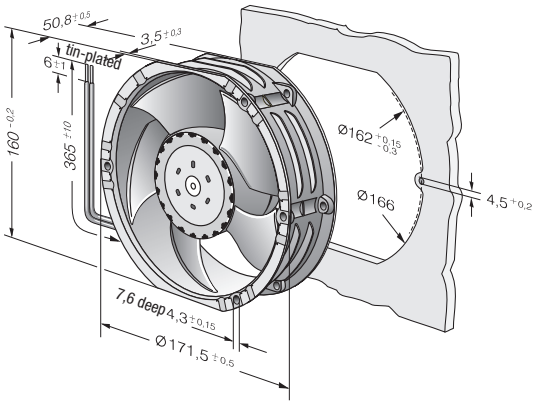

Guard grilles
from p. 238

ebmpapst

max. 1100 m³/h

DC diagonal fans

Series DV 6300 Ø 172 x 51 mm

- **Material:** Housing: Die-cast aluminium Impeller: GRP[1)] (PA)
- **Direction of air flow:** Exhaust over struts
- **Direction of rotation:** Counter-clockwise, seen on rotor
- **Connection:** (+) and GND: AWG 18, UL 1007, TR 64, speed signal and control input AWG 22, UL 1007, TR 64
- **Highlights:** 3-phase fan drive with very smooth running and high efficiency. Housing with grounding lug for screw M4 x 8 (Torx)
- **Mass:** 1050 g

1) Fibreglass-reinforced plastic

- **Possible special versions:**
  (See chapter DC fans - specials)
  - Speed signal
  - Go / No-go alarm
  - Alarm with limit speed
  - External temperature sensor
  - Internal temperature sensor
  - PWM control input
  - Analogue control input
  - Multi-option control input
  - Protection against moisture
  - Protection against salt fog
  - Type of protection: IP 54

	Nominal data	Air flow	Air flow	Nominal voltage	Voltage range	Sound pressure level	Sound power level	Sintec sleeve bearings / Ball bearings	Input power	Nominal speed	Temperature range	Service life L_{10} (40 °C) ebm-papst Standard / Service life L_{10} (T_{max}) ebm-papst Standard	Life expectancy L_{10IPC} (40 °C) see page 17	Curve
	Type	m³/h	CFM	VDC	VDC	dB(A)	Bel(A)	□/■	Watts	rpm	°C	Hours	Hours	
NEW	DV 6318/2 TDHHP*	630	371	**48**	36…72	68	7,6	■	75	4000	-20…+65	70 000 / 40 000	117 500	①
NEW	DV 6318/2 TDH3P*	770	453	**48**	36…72	73	8,0	■	135	4900	-20…+65	60 000 / 32 500	102 500	②
NEW	DV 6318/2 TDH4P	1050	617	**48**	36…72	77	8,7	■	300	6500	-20…+65	50 000 / 27 500	85 000	③
NEW	DV 6318/2 TDH5P**	1100	647	**48**	36…72	79	8,9	■	360	6800	-20…+65	40 000 / 22 500	67 500	④

* provisional
** Rotor protrusion a = 3 mm
Subject to alternations

Speed control range from 1000 rpm up to maximum nominal speed. Stationary at 0 % PWM, maximum speed at sensor break.
The fans have a speed increase of up to 30%, thus producing a more even characteristic curve.

		n rpm	P_{ed} W	Lw_A dB(A)	L_{10} (40 °C)	L_{10} (65 °C)	L_{10IPC} (40 °C)
①	❶	4000	65,5	79	70 000	40 000	117 500
①	❷	3835	64,5	78	72 500	40 000	122 500
①	❸	3815	64,5	76	75 000	42 500	127 500
①	❹	3930	65	76	77 500	42 500	130 000
①	❺	4240	66	79	77 500	42 500	130 000
②	❶	4900	120	83	60 000	32 500	102 500
②	❷	4690	119	82	67 500	37 500	115 000
②	❸	4670	119	80	72 500	40 000	122 500
②	❹	4870	120	81	75 000	42 500	127 500
②	❺	5190	121	85	75 000	42 500	127 500

		n rpm	P_{ed} W	Lw_A dB(A)	L_{10} (40 °C)	L_{10} (65 °C)	L_{10IPC} (40 °C)
③	❶	6500	280	90	50 000	27 500	85 000
③	❷	6230	275	89	62 500	35 000	105 000
③	❸	6200	280	88	70 000	40 000	117 500
③	❹	6450	281	88	72 500	40 000	122 500
③	❺	6900	283	92,5	72 500	40 000	122 500
④	❶	6950	345	92	40 000	22 500	67 500
④	❷	6720	345	91	57 500	32 500	97 500
④	❸	6630	345	89,5	62 500	35 000	105 000
④	❹	6850	345	89	67 500	37 500	115 000
④	❺	7300	345	94	72 500	40 000	122 500

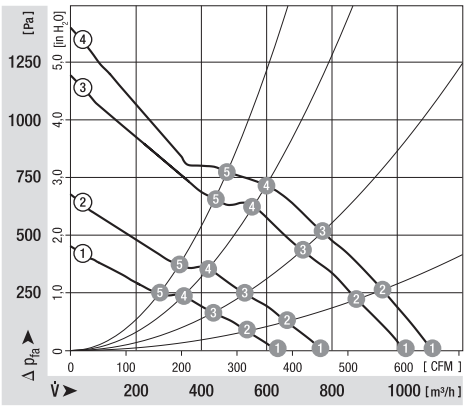

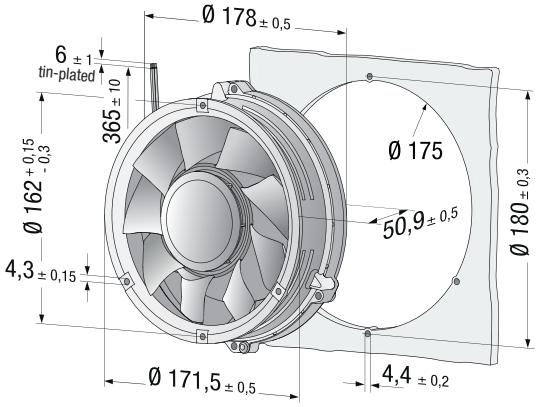

max. 480 m³/h

DC axial fans

Series 6400 172 x 150 x 51 mm

- **Material:** Housing: Die-cast aluminium
  Impeller: GRP[1)] (PA)
- **Direction of air flow:** Exhaust over struts
- **Direction of rotation:** Counter-clockwise, seen on rotor
- **Connection:** On flat plugs 3 x 0.5 mm
- **Highlights:** Housing with grounding lug for screw M4 x 8 (Torx)
- **Mass:** 760 g

- **Possible special versions:**
  (See chapter DC fans - specials)
  - Speed signal
  - Go / No-go alarm
  - Alarm with limit speed
  - External temperature sensor
  - Internal temperature sensor
  - PWM control input
  - Analogue control input
  - Protection against moisture
  - Protection against salt fog
  - Type of protection: IP 54

1) Fibreglass-reinforced plastic

Nominal data	Air flow	Air flow	Nominal voltage	Voltage range	Sound pressure level	Sound power level	Sintec sleeve bearings / Ball bearings	Input power***	Nominal speed	Temperature range	Service life L_{10} (40 °C) ebm-papst Standard / Service life L_{10} (T_{max}) ebm-papst Standard	Life expectancy L_{10IPC} (40 °C) see page 17	Curve
Type	**m³/h**	**CFM**	**VDC**	**VDC**	**dB(A)**	**Bel(A)**	□/■	**Watts**	**rpm**	**°C**	**Hours**	**Hours**	
6412 M	350	206	**12**	8...15	52	6,0	■	12	2 850	-20...+72	80 000 / 37 500	135 000	①
6424 M	350	206	**24**	12...32	52	6,0	■	12	2 850	-20...+72	80 000 / 37 500	135 000	①
6424	410	241	**24**	12...28	57	6,4	■	17	3 400	-20...+72	75 000 / 35 000	127 500	②
6424 H	480	283	**24**	12...28	63	7,1	■	26	4 000	-20...+55**	70 000 / 50 000	117 500	③
6448	410	241	**48**	28...60	57	6,4	■	17	3 400	-20...+72	75 000 / 35 000	127 500	②
6448 H*	480	283	**48**	28...60	63	7,1	■	26	4 000	-20...+55**	70 000 / 50 000	117 500	③

Subject to alternations

* Strand 310 mm.
** 72 °C versions on request
*** Input power at free air flow, these values can be significantly higher in the operating point.

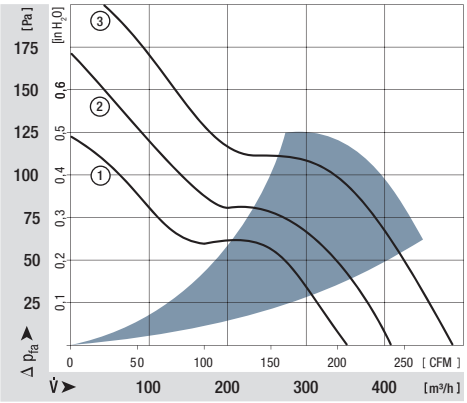

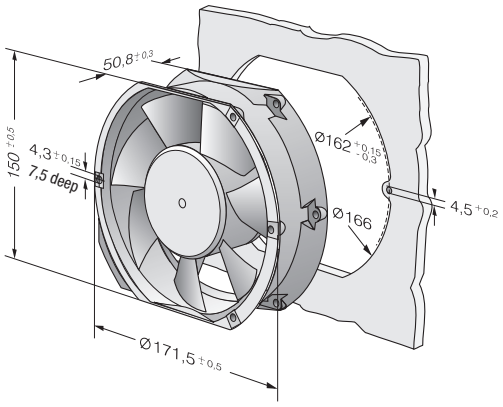

Guard grilles from p. 238

Connection cables from p. 251

ebmpapst

max. 900 m³/h

DC axial fans

Series 6400 TD TURBOFAN 172 x 150 x 51 mm

- **Material:** Housing: Die-cast aluminium Impeller: GRP[1] (PA)
- **Direction of air flow:** Exhaust over struts
- **Direction of rotation:** Counter-clockwise, seen on rotor
- **Connection:** Via single wires AWG 18, 20 or AWG 22, TR 64, speed signal and control input AWG 22
- **Highlights:** 3-phase fan drive with very smooth running and high efficiency. Housing with grounding lug for screw M4 x 8 (Torx)
- **Mass:** 760 g

1) Fibreglass-reinforced plastic

- **Possible special versions:** (See chapter DC fans - specials)
  - Speed signal
  - Go / No-go alarm
  - Alarm with limit speed
  - External temperature sensor
  - Internal temperature sensor
  - PWM control input
  - Analogue control input
  - Protection against moisture
  - Protection against salt fog
  - Type of protection: IP 54
  - Reversible direction of rotation

Nominal data		Air flow	Air flow	Nominal voltage	Voltage range	Sound pressure level	Sound power level	Sintec sleeve bearings Ball bearings	Input power**	Nominal speed	Temperature range	Service life L_{10} (40 °C) ebm-papst Standard	Service life L_{10} (T_{max}) ebm-papst Standard	Life expectancy L_{10IPC} (40 °C) see page 17	Curve
Type		m³/h	CFM	VDC	VDC	dB(A)	Bel(A)	□/■	Watts	rpm	°C	Hours		Hours	
min	6424 TD...	90	53	24	16...28	18	—	■	2	800	-20...+60	70 000 / 45 000		117 500	①
max		600	353			65	7,4		50	5 100					②
min	6448 TD...	90	53	48	40...55*	18	—	■	2	800	-20...+60	70 000 / 45 000		117 500	①
max		600	353			65	7,4		50	5 100					②
min	6448 TDHH...	90	53	48	36...72	18	—	■	2	800	-20...+60	70 000 / 45 000		117 500	①
max		900	530			78	8,6		163	7500					③

Subject to alternations

* Variants with an extended voltage range available to deliver on request.

Models 6424 TD..., 6448 TD... and 6448 TDHH... are available in customer-specific, custom-developed variants only.
The data specified here is technically feasible benchmark values. The fans can be specially adapted to your application with signal outputs and control inputs.
For details of the technical possibilities, refer to the chapters on the sensor signal, alarm signal and control inputs beginning on page 161.
** Input power at free air flow, these values can be significantly higher in the operating point.

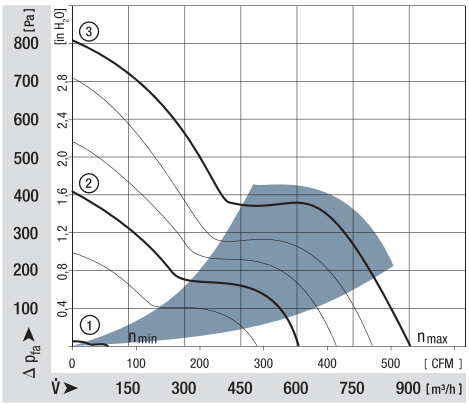

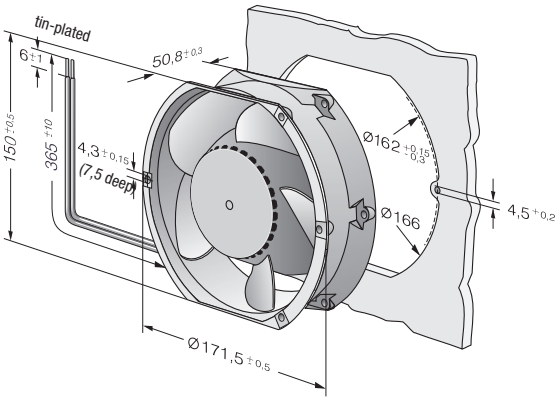

max. 530 m³/h

DC diagonal fans

Series DV 6400 172 x 160 x 51 mm

- **Material:** Housing: Die-cast aluminium
  Impeller: GRP[1)] (PA)
- **Direction of air flow:** Exhaust over struts
- **Direction of rotation:** Counter-clockwise, seen on rotor
- **Connection:** Via single wires AWG 22, TR 64
- **Highlights:** Housing with grounding lug for screw M4 x 8 (Torx)
- **Mass:** 820 g

- **Possible special versions:**
  (See chapter DC fans - specials)
  - Speed signal
  - Go / No-go alarm
  - Alarm with limit speed
  - External temperature sensor
  - Internal temperature sensor
  - PWM control input
  - Analogue control input
  - Protection against moisture
  - Protection against salt fog
  - Type of protection: IP 54

1) Fibreglass-reinforced plastic

Nominal data	Air flow	Air flow	**Nominal voltage**	Voltage range	Sound pressure level	Sound power level	Sintec sleeve bearings / Ball bearings	Input power	Nominal speed	Temperature range	Service life L_{10} (40 °C) ebm-papst Standard / Service life L_{10} (T_{max}) ebm-papst Standard	Life expectancy L_{10IPC} (40 °C) see page 17	Curve
Type	**m³/h**	**CFM**	**VDC**	**VDC**	**dB(A)**	**Bel(A)**	□/■	**Watts**	**rpm**	**°C**	**Hours**	**Hours**	
DV 6424	530	312	**24**	16...28	65	7,3	■	40	4 300	-20...+75	90 000 / 35 000	152 500	①
DV 6448	530	312	**48**	28...60	65	7,3	■	40	4 300	-20...+75	90 000 / 35 000	152 500	①

Subject to alternations

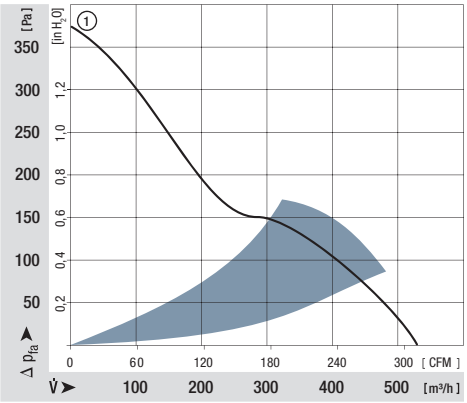

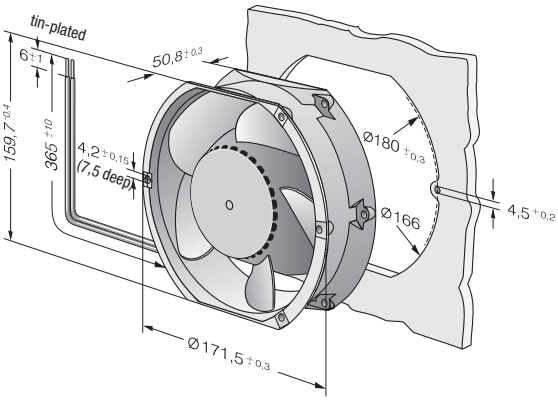

Guard grilles
from p. 238

ebmpapst

max. 680 m³/h

DC diagonal fans

Series DV 6400 TD TURBOFAN 172 x 160 x 51 mm

- **Material:** Housing: Die-cast aluminium
  Impeller: GRP[1)] (PA)
- **Direction of air flow:** Exhaust over struts
- **Direction of rotation:** Counter-clockwise, seen on rotor
- **Connection:** Via single wires AWG 22, TR 64
- **Highlights:** 3-phase fan drive with very smooth running and high efficiency. Housing with grounding lug for screw M4 x 8 (Torx)
- **Mass:** 820 g

1) Fibreglass-reinforced plastic

- **Possible special versions:**
  (See chapter DC fans - specials)
  - Speed signal
  - Go / No-go alarm
  - Alarm with limit speed
  - External temperature sensor
  - Internal temperature sensor
  - PWM control input
  - Analogue control input
  - Protection against moisture
  - Protection against salt fog
  - Type of protection: IP 54
  - Reversible direction of rotation

Nominal data		Air flow	Air flow	Nominal voltage	Voltage range	Sound pressure level	Sound power level	Sintec sleeve bearings / Ball bearings	Input power*	Nominal speed	Temperature range	Service life L_{10} (40 °C) ebm-papst Standard / Service life L_{10} (T_{max}) ebm-papst Standard	Life expectancy L_{10IPC} (40 °C) see page 17	Curve
Type		m³/h	CFM	VDC	VDC	dB(A)	Bel(A)	□/■	Watts	rpm	°C	Hours	Hours	
	DV 6424 TD	680	400	**24**	16...28	71	7,9	■	91	5 500	-20...+60	65 000 / 40 000	110 000	②
min	DV 6424 TD...	100	59	**24**	16...28	29	—	■	2	800	-20...+60	65 000 / 40 000	110 000	①
max		680	400			71	7,9		91	5 500				②
min	DV 6448 TD...	100	59	**48**	40...55	29	—	■	2	800	-20...+60	65 000 / 40 000	110 000	①
max		680	400			71	7,9		86	5 500				②

Subject to alternations

Models DV 6424 TD... and DV 6448 TD... are available in customer-specific, custom-developed variants only.
The data specified here is technically feasible benchmark values. The fans can be specially adapted to your application with signal outputs and control inputs.
For details of the technical possibilities, refer to the chapters on the sensor signal, alarm signal and control inputs beginning on page 161.
* Input power at free air flow, these values can be significantly higher in the operating point.

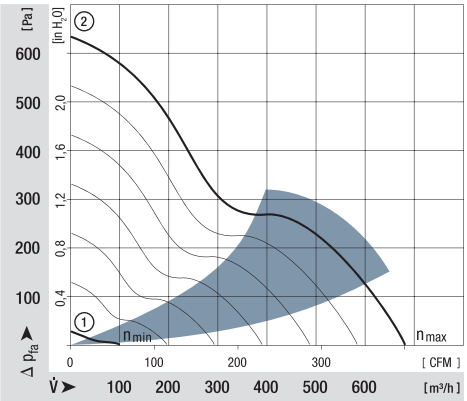

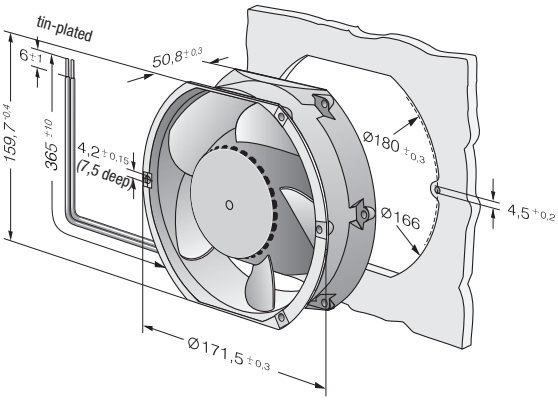

max. 1220 m³/h

S-Force

DC axial fans

Series 2200 FTD 220 x 200 x 51 mm

- **Material:** Housing: Die-cast aluminium
  Impeller: GRP[1)] (PA)
- **Direction of air flow:** Exhaust over struts
- **Direction of rotation:** Counter-clockwise, seen on rotor
- **Connection:** Via single wires AWG 18, 20 or AWG 22, TR 64, speed signal and control input AWG 22
- **Highlights:** 3-phase fan drive with very smooth running and high efficiency. Housing with grounding lug for screw M4 x 8 (Torx)
- **Mass:** 1000 g

1) Fibreglass-reinforced plastic

- **Possible special versions:**
  (See chapter DC fans - specials)
  - Speed signal
  - Go / No-go alarm
  - Alarm with limit speed
  - External temperature sensor
  - Internal temperature sensor
  - PWM control input
  - Analogue control input
  - Multi-option control input
  - Protection against moisture
  - Protection against salt fog
  - Type of protection: IP 54

Nominal data	Air flow	Air flow	**Nominal voltage**	Voltage range	Sound pressure level	Sound power level	Sintec sleeve bearings / Ball bearings	Input power*	Nominal speed	Temperature range	Service life L_{10} (40 °C) ebm-papst Standard / Service life L_{10} (T_{max}) ebm-papst Standard	Life expectancy L_{10IPC} (40 °C) see page 17	Curve
Type	**m³/h**	**CFM**	**VDC**	**VDC**	**dB(A)**	**Bel(A)**	□/■	**Watts**	**rpm**	**°C**	**Hours**	**Hours**	
2214 F/2 TDHO	790	465	**24**	16...30	62	7,1	■	35	4250	-25...+75	90 000 / 42 500	152 500	①
2214 F/2 TDHHO	940	553	**24**	16...36	66	7,4	■	48	5000	-25...+70	85 000 / 42 500	142 500	②
2218 F/2 TDHO	790	465	**48**	36...57	62	7,1	■	35	4250	-25...+75	90 000 / 42 500	152 500	①
2218 F/2 TDHHO	940	553	**48**	36...72	66	7,4	■	48	5000	-25...+70	85 000 / 42 500	142 500	②
2218 F/2 TDH4P	1220	718	**48**	36...72	72	8,2	■	103	6500	-20...+65	70 000 / 40 000	117 500	③

Subject to alternations

Speed control range from 1000 rpm up to maximum nominal speed. Stationary at 0 % PWM / 0 V,
Type O: stationary at sensor break; Type P: maximum speed at sensor break.
* Input power at free air flow, these values can be significantly higher in the operating point.

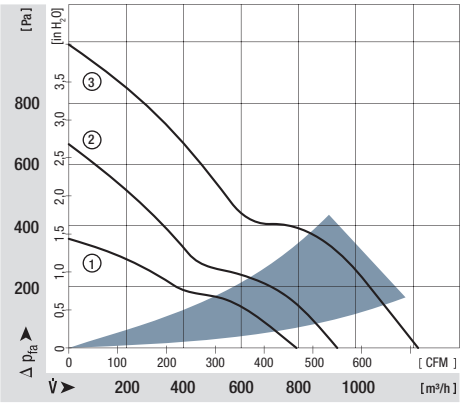

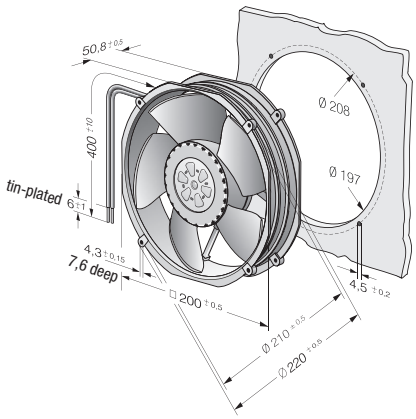

Guard grilles
from p. 238

ebmpapst

max. 1000 m³/h

DC axial fans

Series 2200 TD 225 x 225 x 80 mm

- **Material:** Wall ring: Die-cast aluminium
  Impeller: GRP[1)] (PA)
- **Direction of air flow:** Exhaust over struts
- **Direction of rotation:** Counter-clockwise, seen on rotor
- **Connection:** With terminal strip
- **Highlights:** 3-phase fan drive with very smooth running
  Fully integrated electronic commutation
- **Mass:** 2,1 kg

1) Fibreglass-reinforced plastic

- **Possible special versions:**
  (See chapter DC fans - specials)
  - Speed signal
  - Go / No-go alarm
  - Alarm with limit speed
  - External temperature sensor
  - Internal temperature sensor
  - PWM control input
  - Analogue control input
  - Multi-option control input
  - Protection against moisture
  - Type of protection: IP 54

Nominal data	Air flow	Air flow	**Nominal voltage**	Voltage range	Sound pressure level	Sound power level	Sintec sleeve bearings / Ball bearings	Input power*	Nominal speed	Temperature range	Service life L_{10} (40 °C) ebm-papst Standard / Service life L_{10} (T_{max}) ebm-papst Standard	Life expectancy L_{10IPC} (40 °C) see page 17	Curve
Type	**m³/h**	**CFM**	**VDC**	**VDC**	**dB(A)**	**Bel(A)**	□/■	**Watts**	**rpm**	**°C**	**Hours**	**Hours**	
2214/2 TDO	1000	588	**24**	16...30	59	6,8	■	50	3 000	-20...+60	80 000 / 50 000	135 000	①
2218/2 TDO	1000	588	**48**	36...57	59	6,8	■	50	3 000	-20...+60	80 000 / 50 000	135 000	①

Subject to alternations

* Input power at free air flow, these values can be significantly higher in the operating point.

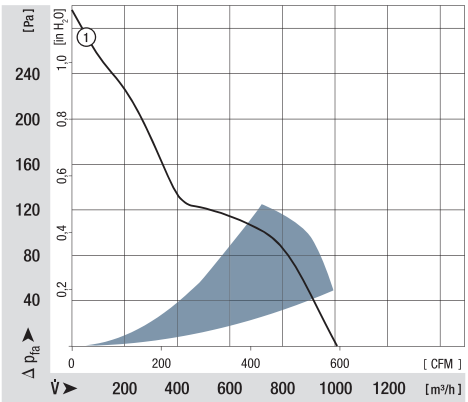

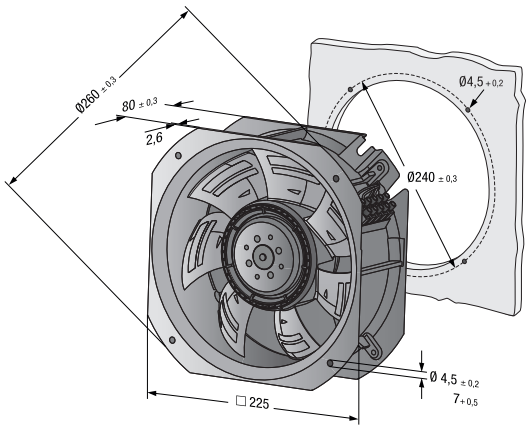

max. 1245 m³/h

DC diagonal module

225 x 225 x 80 mm

- **Material:** Housing: Fibreglass-reinforced plastic (PA6)
  Impeller: Fibreglass-reinforced plastic (PA)
- **Direction of air flow:** Exhaust over struts
- **Direction of rotation:** Clockwise, seen on rotor
- **Connection:** Via connection line AWG 20, 4x brass lead tips crimped
- **Mass:** 1,7 kg
- **Operation mode:** Continuous operation (S1)

Nominal data		Curve	Nominal voltage	Voltage range	Air flow	Speed / rpm	Input power	Current draw	Sound power level	Perm. amb. temp.	Technical features and electrical connections
Type	**Motor**		**VDC**	**VDC**	**m³/h**	**rpm**	**W**	**A**	**dB(A)**	**°C**	
K1G 200-AD65-04	M1G 074-BF	①	24	16...28	1020	3 400	95	4,7	76	-25...+60	p. 258 / J5)
K1G 200-AD31-02	M1G 074-BF	②	24	16...28	1045	3 520	107	5,4	77	-25...+70	p. 258 / J5)
K1G 200-AD49-04	M1G 074-BF	③	48	36...57	1095	3 650	120	3,4	77	-25...+60	p. 258 / J5)
K1G 200-AD37-02	M1G 074-BF	④	48	36...57	1245	4 140	183	5,6	81	-25...+70	p. 258 / J5)

Subject to alternations

		n rpm	P_{ed} W	I A	Lw_A dB(A)
①	1	3400	95	4,70	76
①	2	3410	116	5,61	74
①	3	3410	119	5,75	74
①	4	3410	117	5,62	76
②	1	3520	107	5,30	77
②	2	3520	127	6,24	75
②	3	3520	129	6,31	76
②	4	3520	126	6,18	76
③	1	3650	120	3,40	77
③	2	3650	141	3,90	75
③	3	3650	145	3,99	76
③	4	3650	141	3,88	78
④	1	4140	183	5,60	81
④	2	4090	212	6,46	79
④	3	4060	213	6,52	79
④	4	4110	211	6,43	80

Air performance measured as per: ISO 5801, Installation category A, without protection against accidental contact.

Suction-side noise levels: LWA as per ISO 13347, LpA measured at 1 m distance to fan axis.

The acoustic values given are only valid under the measurment conditions listed and may vary depending on the installation situation.

With any deviation to the standard setup, the specific values have to be checked and reviewed once installed or fitted! For detailed information see http://www.ebmpapst.com/general conditions

Cable assignment:
Red = UN
Yellow = 0-10 VDC
White = Speed monitoring output
Blue = GND

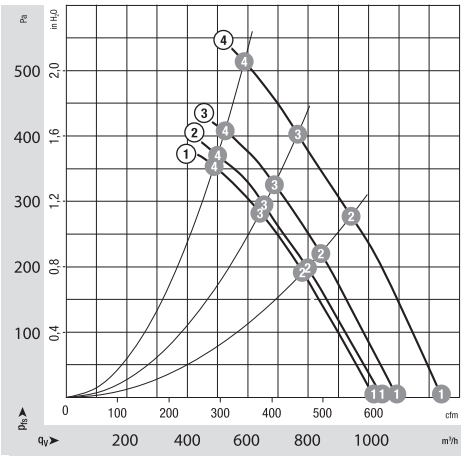

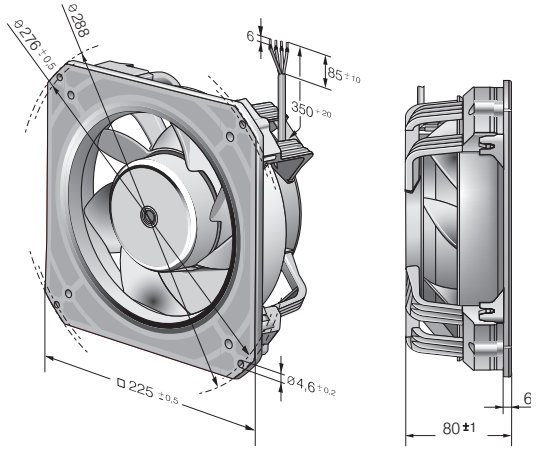

max. 905 m³/h

DC diagonal module

225 x 225 x 89 mm

- **Material:** Housing: Fibreglass-reinforced plastic (PA6)
  Impeller: Fibreglass-reinforced plastic (PA)
- **Direction of air flow:** Exhaust over struts
- **Direction of rotation:** Clockwise, seen on rotor
- **Connection:** Via connection line AWG 16, 4x brass lead tips crimped
- **Mass:** 2,2 kg
- **Operation mode:** Continuous operation (S1)

Nominal data		Curve	Nominal voltage	Voltage range	Air flow	Speed / rpm	Input power	Current draw	Sound power level	Perm. amb. temp.	Technical features and electrical connections
Type	**Motor**		**VDC**	**VDC**	**m³/h**	**rpm**	**W**	**A**	**dB(A)**	**°C**	
K3G 200-BD46-04	M3G 074-CF	①	24	16...28	725	4120	170	7,0	80	-25...+60	p. 258 / J5)
K3G 200-BD44-02	M3G 074-CF	②	24	16...28	805	4830	275	11,5	84	-25...+60	p. 258 / J5)
K3G 200-BD64-04	M3G 074-CF	③	48	36...57	900	4890	280	5,9	85	-25...+60	p. 258 / J5)
K3G 200-BDA8-02	M3G 074-CF	④	48	36...57	905	5470	400	8,4	88	-25...+60	p. 258 / J5)

Subject to alternations

		n rpm	P_{ed} W	I A	Lw_A dB(A)
①	❶	4120	170	7,0*	80
①	❷	4025	180	7,52*	77
①	❸	4005	187	7,80*	76
①	❹	4045	187	7,78*	78
②	❶	4830	275	11,5*	84
②	❷	4720	294	12,24*	81
②	❸	4685	299	12,48*	80
②	❹	4715	295	12,30*	83
③	❶	4890	280	5,9*	85
③	❷	4795	300	6,27*	81
③	❸	4755	307	6,41*	80
③	❹	4780	304	6,35*	82
④	❶	5470	400	8,4*	88
④	❷	5365	426	8,89*	85
④	❸	5310	438	9,17*	83
④	❹	5355	431	9,01*	87

Air performance measured as per: ISO 5801, Installation category A, without protection against accidental contact.

Suction-side noise levels: LWA as per ISO 13347, LpA measured at 1 m distance to fan axis.

The acoustic values given are only valid under the measurment conditions listed and may vary depending on the installation situation.

With any deviation to the standard setup, the specific values have to be checked and reviewed once installed or fitted! For detailed information see http://www.ebmpapst.com/general conditions

* current measured at nominal voltage

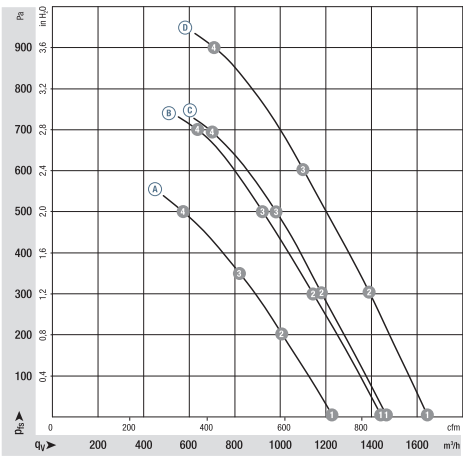

Cable assignment:

Red = UN
Yellow = 0-10 VDC
White = Speed monitoring output
Blue = GND

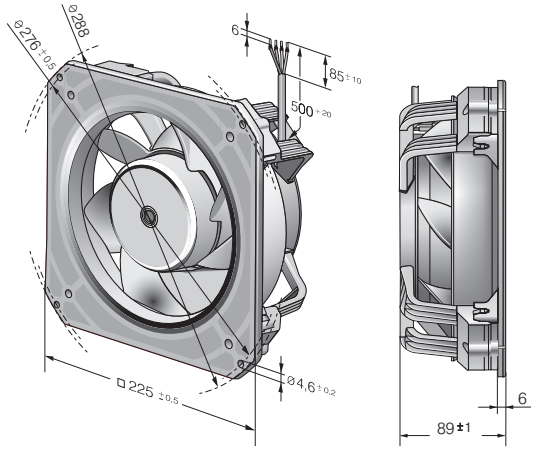

max. 2070 m³/h

DC axial fans

Ø 250 mm

- **Material:** Wall ring: Die-cast aluminium
  Blades: Plastic (PP)
  Rotor: Thick layer passivated
- **Number of blades:** 7
- **Direction of air flow:** "V"
- **Direction of rotation:** Counter-clockwise, seen on rotor
- **Insulation class:** "B"
- **Mounting position:** Any
- **Condensate discharges:** On rotor side
- **Operation mode:** Continuous operation (S1)
- **Bearings:** Maintenance-free ball bearings

Nominal data		Curve	Nominal voltage	Voltage range	Air flow	Speed / rpm	Input power	Current draw	Max. back-pressure	Perm. amb. temp.	Technical features and electrical connections
Type	**Motor**		**VDC**	**VDC**	**m³/h**	**rpm**	**W**	**A**	**Pa**	**°C**	
W1G250-HJ87 -02	M1G 074-BF	A	24	16-28	2070	3090	120	6,80	150	-25...+60	p. 254 / E)
W1G250-HJ63 -02	M1G 074-BF	B	48	36-57	2070	3090	120	3,40	150	-25...+60	p. 254 / E)

Subject to alternations

Curve:

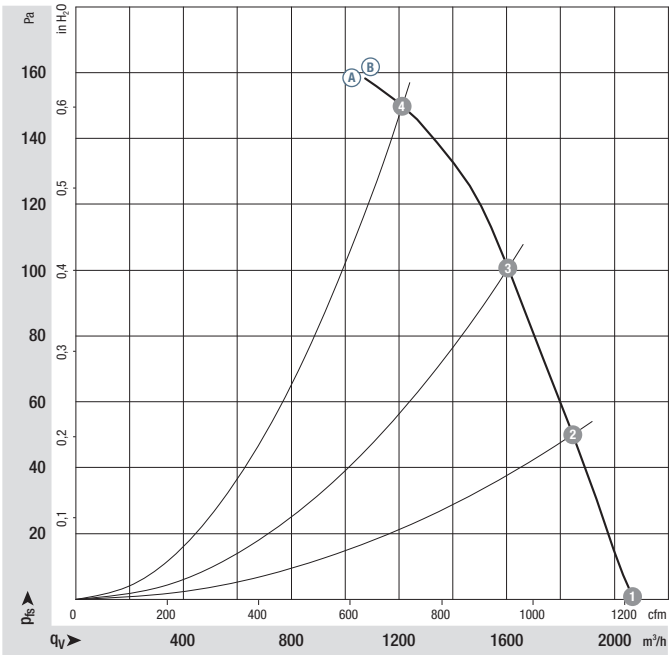

		n rpm	P_{ed} W	I A	L_WA dB(A)
A	1	3090	120	6,80	74
A	2	2950	124	7,10	73
A	3	2820	127	7,43	73
A	4	2730	130	7,80	78
B	1	3090	120	3,40	74
B	2	2950	124	3,55	73
B	3	2820	127	3,74	73
B	4	2730	130	3,90	78

Air performance measured as per: ISO 5801, Installation category A, without protection against accidental contact. Suction-side noise levels: LWA as per ISO 13347, LpA measured at 1 m distance to fan axis. The acoustic values given are only valid under the measurment conditions listed and may vary depending on the installation situation. With any deviation to the standard setup, the specific values have to be checked and reviewed once installed or fitted!
For detailed information see http://www.ebmpapst.com/general conditions

ebmpapst

- **Technical features:** See electrical connections p. 254
- **EMC:** Interference emission acc. to EN 55022 (Class B)
  Interference immunity acc. to EN 61000-6-2 (industrial environment)
- **Electrical connection:** Via terminal strip
- **Protection class:** I
- **Product conforming to standards:** EN 60950-1

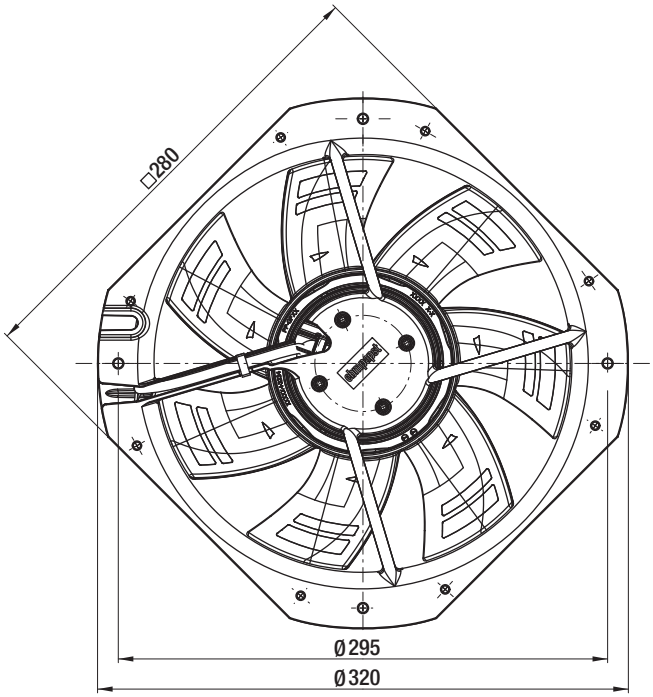

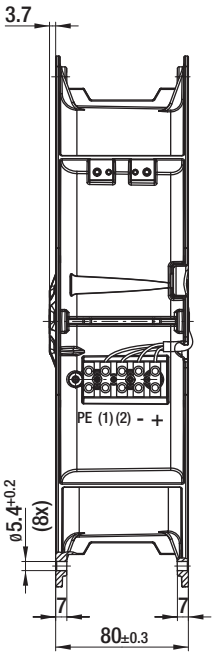

(1) Control input "V"
(2) Speed output

max. 2345 m³/h

DC axial fans – HyBlade®

Ø 300 mm

- **Material:** Guard grille: Steel, phosphated and coated in black plastic
  Wall ring: Sheet steel, pre-galvanised and coated in black plastic
  Blades: Plastic (PP)
  Rotor: Coated in black
- **Number of blades:** 5
- **Direction of air flow:** "V"
- **Direction of rotation:** Counter-clockwise, seen on rotor
- **Type of protection:** IP 42
- **Insulation class:** "B"
- **Mounting position:** Any
- **Condensate discharges:** None
- **Operation mode:** Continuous operation (S1)
- **Bearings:** Maintenance-free ball bearings

Nominal data		Curve	Nominal voltage	Voltage range	Air flow	Speed / rpm	Input power	Current draw	Max. back-pressure	Perm. amb. temp.	Technical features and electrical connections
Type	**Motor**		**VDC**	**VDC**	**m³/h**	**rpm**	**W**	**A**	**Pa**	**°C**	
***1G 300**	M1G 074-CF	A	24	16-28	2320	1830	80	3,80	100	-25..+60	p. 258 / J5)
***1G 300**	M1G 074-CF	B	48	36-57	2345	1830	80	1,90	100	-25..+60	p. 258 / J5)

Subject to alternations

Curve:

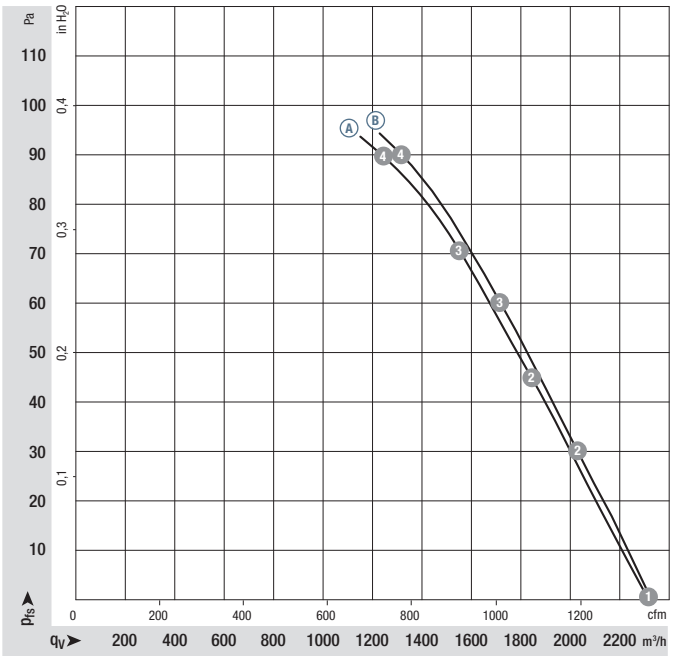

		n rpm	P_{ed} W	I A	L_WA dB(A)
A	1	1810	80	3,80	67
A	2	1730	86	4,03	67
A	3	1690	87	4,10	66
A	4	1635	89	4,21	70
B	1	1870	87	2,00	68
B	2	1805	90	2,10	67
B	3	1765	91	2,13	67
B	4	1695	92	2,19	69

Air performance measured as per: ISO 5801, Installation category A, with ebm-papst inlet nozzle without protection against accidental contact. Suction-side noise levels: LWA as per ISO 13347, LpA measured at 1 m distance to fan axis. The acoustic values given are only valid under the measurment conditions listed and may vary depending on the installation situation. With any deviation to the standard setup, the specific values have to be checked and reviewed once installed or fitted!
For detailed information see http://www.ebmpapst.com/general conditions

ebmpapst

- **Technical features:** See electrical connections p. 258
- **EMC:** Interference emission acc. to EN 55022 (Class B)
  Interference immunity acc. to EN 61000-6-2 (industrial environment)
- **Cable exit:** lateral
- **Product conforming to standards:** EN 60950-1
- **Approvals:** GOST, CSA C22.2 Nr. 77, UL 1004-1

Direction of air flow	"V" Without attachments	Mass without attachments kg	"V" With full round nozzle	Mass with full round nozzle kg	"V" With guard grille for short nozzle	Mass with guard grille for short nozzle kg
"V"	A1G 300-AC19 -54	1,8	W1G 300-DC19 -54	3,8	S1G 300-AC19 -54	2,8
"V"	A1G 300-AC33 -54	1,8	W1G 300-DC33 -54	3,8	S1G 300-AC33 -54	3,1

A1G 300

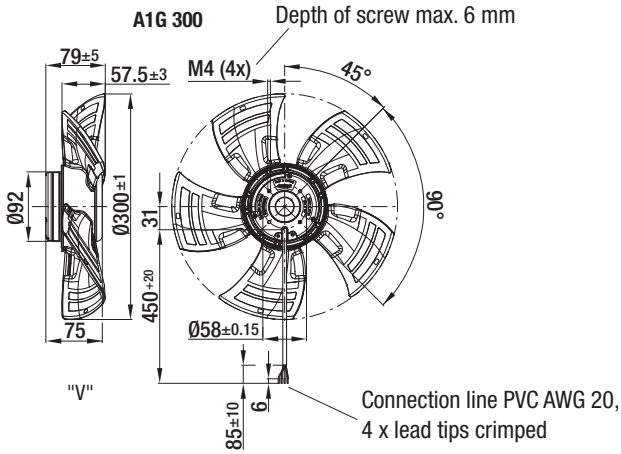

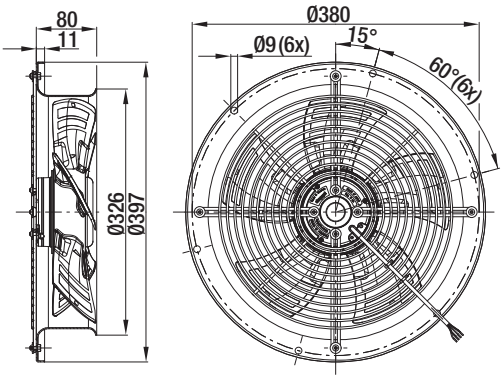

W1G 300

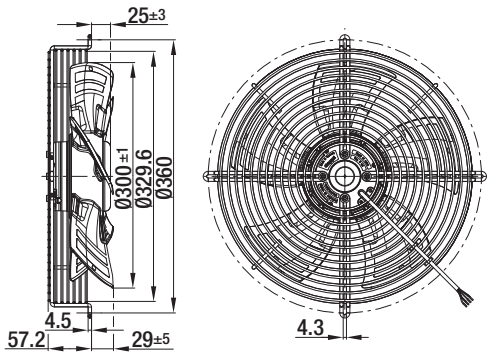

S1G 300

DC centrifugal fans

DC centrifugal fan overview	**91**
DC centrifugal fans	**93**
DC tangential fans	**134**
DC centrifugal fans and blowers	**136**

DC centrifugal fans

Technical information

Product line
Our centrifugal product line includes fans for every application. Whether as free-running impellers with a diameter between 97 mm and 225 mm or as assemblies in a ready-to-install, compact housing with inlet nozzle with an edge length between 51 mm and 270 mm. Of course, all models feature high-efficiency, brushless motor technology.

Electronic protection against reverse polarity
ebm-papst DC fans have electronically commutated drives with electronic protection against reverse polarity.The electronics are conveniently located in the fan hub.

Product life expectancy
A distinctive feature of DC fan technology is the convincingly high product life expectancy. Thanks to the excellent efficiency of the brushless drives, the thermal load of the bearings is reduced, thus considerably increasing the life expectancy of the fans.

Type of protection
DC fans with sleeve and ball bearings are powered by class E insulated motors. All ebm-papst fans conform to the requirements of type of protection IP 20. Fans conforming to IP 54 / IP 68 and special types of protection are also available.

Voltage range
Many of our DC fans can be operated on voltages that are up to 50% lower and 25% higher than their nominal voltage (see Voltage range in the technical tables). This enables the air performance to be adapted to the cooling requirements and allows the noise to be reduced, even if the fan does not have a control input.

Closed-loop speed control and monitoring
Closed-loop speed control and function monitoring are becoming increasingly important in many applications. ebm-papst offers many fans in the standard design with a control input and open collector speed signal.

S-Force centrifugal – RadiCal
The new S-Force centrifugal fans provide peak performance among fans of this type. With air flow capacity of over 1500 m³/h and a pressure build-up of up to 1000 pascals, the highest heat flows are manageable. In addition, the models are extremely efficient due to the multi-pole, electronically commutated drive motors and can be adapted individually to every application thanks to intelligent motor features. Some models use our new, highly efficient RadiCal impellers.

Centrifugal fans for DC operation

Overview of air performance

Dimensions	Series	Air flow	Page
mm		m³/h	
105 x 59 x 79	RV 40	18...24	93
☐ 51 x 15	RLF 35	9,6	94
☐ 76 x 27	RL 48	22...28	95
97 x 93,5 x 33	RL 65	56...61	96
☐ 121 x 37	RL 90 N	40...55	97
☐ 127 x 25	RLF 100	64...80	98
☐ 135 x 38	RG 90 N	55	99
☐ 180 x 40	RG 125 N	60...137	100
☐ 220 x 56	RG 160 N	139...209	101
☐ 220 x 56	RG 160 NTD	59...444	102
☐ 225 x 85	RG 190 TD	630...930	103
☐ 270 x 99	RG 220 TD	1090...1280	104
☐ 270 x 119	RG 225 TD	1040...1450	105
Ø 97 x 41	RET 97 TD	220	106
Ø 104 x 25	REF 100	86...104	107
Ø 101 x 52	RER 101	162...190	108
Ø 120 x 54	RER 120 TD	320...390	109
Ø 120	R1G 120	250	110
Ø 138 x 35	RER 125 N	110...166	112
Ø 133 x 91	RER 133 TD	460...565	113
Ø 165 x 51	RER 160 N	255	114
Ø 165 x 51	RER 160 NTD	66...354	115
Ø 175 x 55	REF 175 TD	800	116
Ø 175 x 69	RER 175 TD	600...980	117
Ø 190 x 69	RER 190 TD	650...970	118
Ø 190	R3G 190	880...930	120
Ø 220	R3G 220	1185...1210	122
Ø 220 x 71	RER 220 TD	1090...1280	124
Ø 225 x 99	RER 225 TD	1190...1600	125
Ø 225	R3G 225	1275...1400	126
Ø 250	R3G 250	1640...1650	128
Ø 280	R3G 280	2175...2210	130
Ø 310	R3G 310	2380...2420	132
201...413 x 50 x 48	QG 030	75...155	134
Ø 85	*1G 085	95	136
Ø 97	*1G 097	95	138
Ø 108	*1G 108	200	140
Ø 120	*1G 120	255	142
Ø 133	*1G 133	225	144
Ø 140	*1G 140	400...410	146
Ø 146	*1G 146	465...470	148
Ø 160	*1G 160	505	150
Ø 133	D1G 133	700	152
Ø 133	D1G 133	1020	154
Ø 146	D1G 146	1000	156
Ø 160	D1G 160	980	158

Subject to alternations

Centrifugal fans for DC operation

Overview of technically feasible designs

	Centrifugal fans																		
	Series	Dimensions mm	VDE, UL, CSA	Sintec sleeve bearings/ball bearings	Speed signal	Go / No-go alarm	Alarm with limit speed	External temperature sensor	Internal temperature sensor	PWM control input	Analogue control input	Multi-option control input	Humidity protection	IP >= IP 54	IP >= IP 68	Salt fog protection	Page
								OPTIONAL									p.
	RV 40	105 x 59 x 79	•	■	•	–	–	–	–	–	–	–	•	–	–	–	93
	RLF 35	51 x 51 x 15	ja	■	•	–	–	–	–	•	–	–	•	–	–	–	94
	RL 48	76 x 76 x 27	ja	■	•	•	•	•	•	•	•	–	•	–	–	–	95
	RL 65	97 x 93,5 x 33	ja	■	•	•	•	•	•	•	•	–	•	–	–	–	96
	RL 90 N	121 x 121 x 37	ja	□/■	•	•	•	•	•	•	•	–	•	•	•	•	97
	RLF 100	127 x 127 x 25	ja	■	•	•	•	•	•	•	•	–	•	•	–	–	98
	RG 90 N	135 x 135 x 38	ja	□/■	•	•	•	•	•	•	•	–	•	•	•	•	99
	RG 125 N	180 x 180 x 40	ja	■	•	•	•	•	•	•	•	–	•	•	•	•	100
	RG 160 N	220 x 220 x 56	ja	■	•	•	•	•	•	•	•	–	•	•	–	•	101
	RG 160 NTD	220 x 220 x 56	ja	■	•	•	•	•	•	•	•	–	•	•	–	•	102
S-Force	RG 190 TD	225 x 225 x 85	ja	■	•	•	•	•	•	•	•	•	•	•	–	•	103
S-Force	RG 220 TD	270 x 270 x 99	ja	■	•	•	•	•	•	•	•	–	•	•	–	•	104
S-Force	RG 225 TD	270 x 270 x 132	ja	■	•	•	•	•	•	•	•	–	•	•	–	•	105
S-Force	RET 97 TD	Ø 97 x 41	ja	■	•	•	•	•	•	•	•	–	•	–	–	–	106
	REF 100	Ø 100 x 25	ja	■	•	•	•	•	•	•	•	–	•	•	–	–	107
	RER 101	Ø 101 x 52	ja	■	•	•	•	•	•	•	•	–	•	–	–	–	108
S-Force	RER 120 TD	Ø 120 x 54	ja	■	•	•	•	•	•	•	•	–	•	–	–	–	109
	RER 125 N	Ø 138 x 35	ja	■	•	•	•	•	•	•	•	–	•	•	•	•	112
S-Force	RER 133 TD	Ø 133 x 91	ja	■	•	•	•	•	•	•	•	•	•	•	–	•	113
	RER 160 N	Ø 165 x 51	ja	■	•	•	•	•	•	•	•	–	•	•	–	•	114
S-Force	RER 160 NTD	Ø 165 x 51	ja	■	•	•	•	•	•	•	•	–	•	•	–	–	115
S-Force	REF 175 TD	Ø 175 x 55	ja	■	•	•	•	•	•	•	•	•	•	•	–	–	116
S-Force	RER 175 TD	Ø 175 x 69	ja	■	•	•	•	•	•	•	•	•	•	•	–	•	117
S-Force	RER 190 TD	Ø 190 x 69	ja	■	•	•	•	•	•	•	•	•	•	•	–	•	118
S-Force	RER 220 TD	Ø 220 x 71	ja	■	•	•	•	•	•	•	•	•	•	•	–	•	124
S-Force	RER 225 TD	Ø 225 x 99	ja	■	•	•	•	•	•	•	•	•	•	•	–	•	125
	QG 030	201...413 x 50 x 48	ja	□/■	•	–	–	–	–	–	–	–	•	–	–	–	134
	Subject to alternations																

* approvals-applied for

– not yet available
• available

□ Sleeve bearings
■ Ball bearings

Please note that these special versions are not possible for all voltages and speeds, and not in all combinations. The special versions are designed for specific customers and projects. As a rule they are not available off the shelf and are tied to minimum volumes.

Please consult your customer support representative about the feasibility of your special variant.

Optional special versions (see page 12)

On the catalogue pages and in the overview on page 12, we provide information about the special designs that are technically feasible in the fan series. Please note that these special versions are not possible for all voltages and speeds, and not in all combinations. The special versions are designed for specific customers and projects and are not available off the shelf usually.

max. 24 m³/h

DC centrifugal fans

Series RV 40 105 x 59 x 79 mm

- **Material:** Scroll housing: GRP[1)]
  Impeller: GRP[1)]
- **Direction of air flow:** Axial: Intake
  Centrifugal: Exhaust
- **Connection:** Via single wires AWG 26, TR 64
- **Highlights:** Forwards-curved impeller
- **Mass:** 100 g

- **Possible special versions:**
  (See chapter DC fans - specials)
  - Speed signal
  - Protection against moisture

1) Fibreglass-reinforced plastic

Nominal data	Air flow	Air flow	Nominal voltage	Voltage range	Sound power level	Sintec sleeve bearings / Ball bearings	Input power	Nominal speed	Temperature range	Service life L_{10} (40 °C) ebm-papst Standard / Service life L_{10} (T_{max}) ebm-papst Standard	Life expectancy L_{10IPC} (40 °C) see page 17	Curve
Type	**m³/h**	**CFM**	**VDC**	**VDC**	**Bel(A)**	□/■	**Watts**	**rpm**	**°C**	**Hours**	**Hours**	
RV 40-18/12 L	18	10,6	**12**	9...16	4,0	■	2,0	3 900	-20...+70	70 000 / 35 000	117 500	①
RV 40-18/12 H	24	14,1	**12**	9...16	5,0	■	4,5	4 800	-20...+70	50 000 / 25 000	85 000	②

Subject to alternations

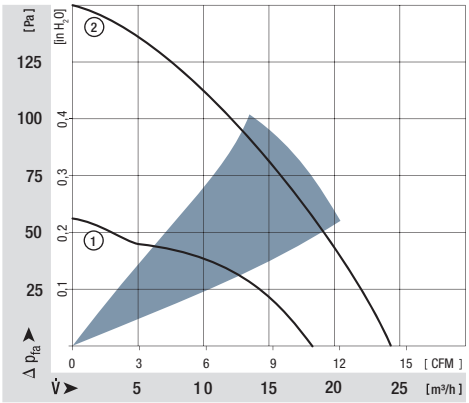

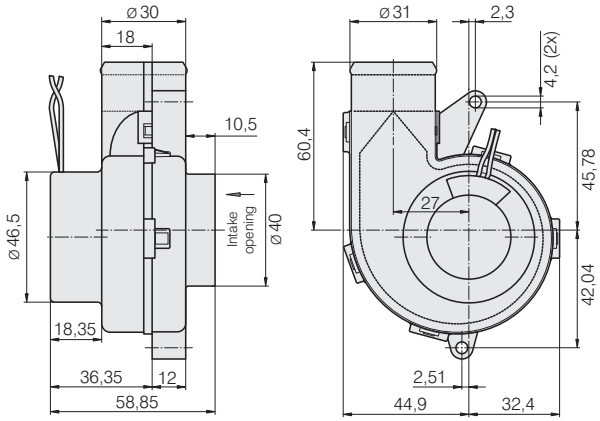

max. 9,6 m³/h

DC centrifugal fans

Series RLF 35 51 x 51 x 15 mm

- **Material:** Scroll housing: GRP[1)]
  Impeller: GRP[1)]
- **Direction of air flow:** Axial: Intake
  Centrifugal: Exhaust
- **Connection:** Via single wires AWG 26, TR 64
- **Highlights:** Forwards-curved impeller
- **Mass:** 40 g

- **Possible special versions:**
  (See chapter DC fans - specials)
  - Speed signal
  - PWM control input
  - Protection against moisture

1) Fibreglass-reinforced plastic

Nominal data	Air flow	Air flow	Nominal voltage	Voltage range	Sound power level	Sintec sleeve bearings / Ball bearings	Input power	Nominal speed	Temperature range	Service life L_{10} (40 °C) ebm-papst Standard / Service life L_{10} (T_{max}) ebm-papst Standard	Life expectancy L_{10IPC} (40 °C) see page 17	Curve
Type	**m³/h**	**CFM**	**VDC**	**VDC**	**Bel(A)**	□/■	**Watts**	**rpm**	**°C**	**Hours**	**Hours**	
RLF 35-8/12 N	9,6	5,7	**12**	8...13,2	5,5	■	3,5	6 700	-20...+70	60 000 / 30 000	102 500	①
RLF 35-8/14 N	9,6	5,7	**24**	14...28	5,5	■	4,3	6 700	-20...+70	60 000 / 30 000	102 500	①

Subject to alternations

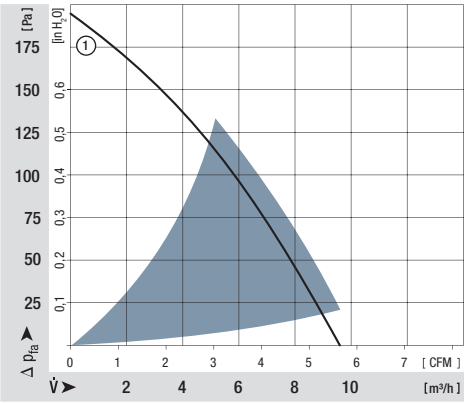

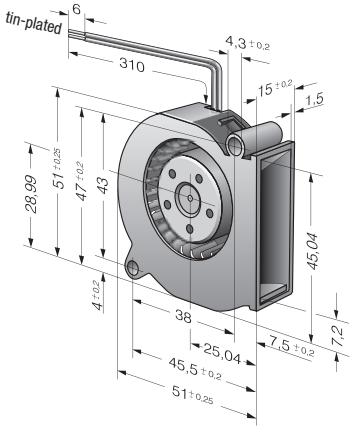

ebmpapst

max. 28 m³/h

DC centrifugal fans

Series RL 48 76 x 76 x 27 mm

- **Material:** Scroll housing: GRP[1)] Impeller: GRP[1)]
- **Direction of air flow:** Axial: Intake Centrifugal: Exhaust
- **Connection:** Via single wires AWG 26, TR 64
- **Highlights:** Forwards-curved impeller
- **Mass:** 75 g

- **Possible special versions:** (See chapter DC fans - specials)
  - Speed signal
  - Go / No-go alarm
  - Alarm with limit speed
  - External temperature sensor
  - Internal temperature sensor
  - PWM control input
  - Analogue control input
  - Protection against moisture

1) Fibreglass-reinforced plastic

Nominal data	Air flow	Air flow	Nominal voltage	Voltage range	Sound power level	Sintec sleeve bearings / Ball bearings	Input power	Nominal speed	Temperature range	Service life L_{10} (40 °C) ebm-papst Standard / Service life L_{10} (T_{max}) ebm-papst Standard	Life expectancy L_{10IPC} (40 °C) see page 17	Curve
Type	**m³/h**	**CFM**	**VDC**	**VDC**	**Bel(A)**	□/■	**Watts**	**rpm**	**°C**	**Hours**	**Hours**	
RL 48-19/12 ML	22	12,9	**12**	8...15	5,3	■	5,0	3 500	-20...+70	70 000 / 35 000	117 500	①
RL 48-19/12	28	16,5	**12**	8...13,5	5,7	■	4,6	4 400	-20...+70	60 000 / 30 000	102 500	②
RL 48-19/14 ML	22	12,9	**24**	18...28	5,3	■	5,0	3 500	-20...+70	70 000 / 35 000	117 500	①
RL 48-19/14	28	16,5	**24**	18...26,4	5,7	■	4,4	4 400	-20...+70	60 000 / 30 000	102 500	②

Subject to alternations

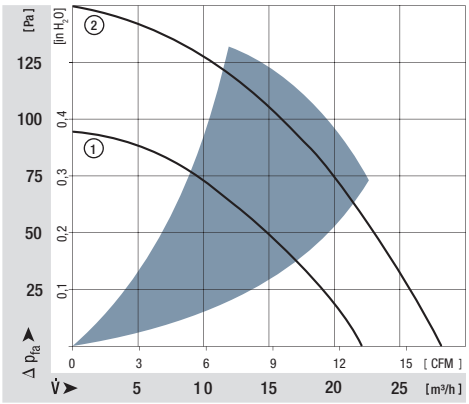

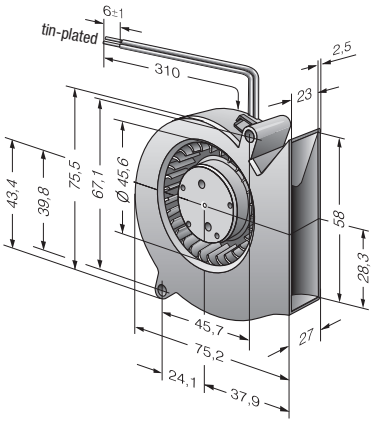

max. 61 m³/h

DC centrifugal fans

Series RL 65 97 x 93,5 x 33 mm

- **Material:** Scroll housing: GRP[1)]
  Impeller: GRP[1)]
- **Direction of air flow:** Axial: Intake
  Centrifugal: Exhaust
- **Connection:** Via single wires AWG 26, TR 64
- **Highlights:** Forwards-curved impeller
- **Mass:** 170 g

- **Possible special versions:**
  (See chapter DC fans - specials)
  - Speed signal
  - Go / No-go alarm
  - Alarm with limit speed
  - External temperature sensor
  - Internal temperature sensor
  - PWM control input
  - Analogue control input
  - Protection against moisture

1) Fibreglass-reinforced plastic

Nominal data	Air flow	Air flow	Nominal voltage	Voltage range	Sound power level	Sintec sleeve bearings / Ball bearings	Input power	Nominal speed	Temperature range	Service life L_{10} (40 °C) ebm-papst Standard / Service life L_{10} (T_{max}) ebm-papst Standard	Life expectancy L_{10IPC} (40 °C) see page 17	Curve
Type	**m³/h**	**CFM**	**VDC**	**VDC**	**Bel(A)**	□ / ■	**Watts**	**rpm**	**°C**	**Hours**	**Hours**	
RL 65-21/12	56	33	**12**	6,8...13,8	6,6	■	15,0	4 500	-20...+70	60 000 / 30 000	102 500	①
RL 65-21/12 H	61	36	**12**	6,8...13,2	6,8	■	19,2	4 900	-20...+55	55 000 / 40 000	92 500	②
RL 65-21/14	56	33	**24**	12...26,4	6,6	■	14,0	4 500	-20...+70	60 000 / 30 000	102 500	①
RL 65-21/14 H	61	36	**24**	12...26,4	6,8	■	18,0	4 900	-20...+60	55 000 / 35 000	92 500	②

Subject to alternations

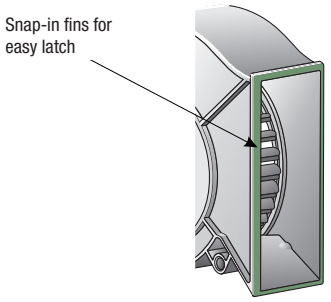

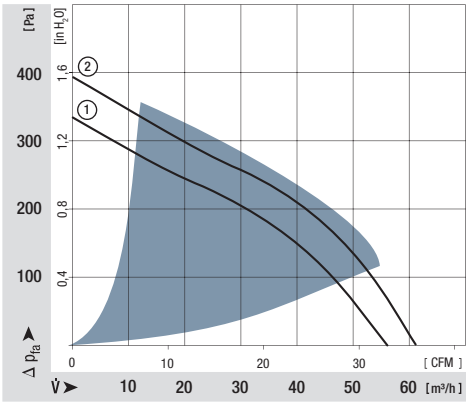

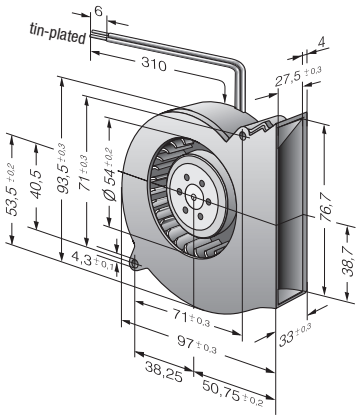

ebmpapst

max. 55 m³/h

DC centrifugal fans

Series RL 90 N 121 x 121 x 37 mm

- **Material:** Scroll housing: GRP[1)]
  Impeller: GRP[1)]
  Housing base: Sheet steel
- **Direction of air flow:** Axial: Intake
  Centrifugal: Exhaust
- **Connection:** Via single wires AWG 22, TR 64
- **Highlights:** Forwards-curved impeller
- **Mass:** 420 g

- **Possible special versions:**
  (See chapter DC fans - specials)
  - Speed signal
  - Go / No-go alarm
  - Alarm with limit speed
  - External temperature sensor
  - Internal temperature sensor
  - PWM control input
  - Analogue control input
  - Protection against moisture
  - Protection against salt fog
  - Type of protection: IP 54 / IP 68

1) Fibreglass-reinforced plastic

Nominal data	Air flow	Air flow	Nominal voltage	Voltage range	Sound power level	Sintec sleeve bearings / Ball bearings	Input power	Nominal speed	Temperature range	Service life L_{10} (40 °C) ebm-papst Standard / Service life L_{10} (T_{max}) ebm-papst Standard	Life expectancy L_{10IPC} (40 °C) see page 17	Curve
Type	**m³/h**	**CFM**	**VDC**	**VDC**	**Bel(A)**	□/■	**Watts**	**rpm**	**°C**	**Hours**	**Hours**	
RL 90-18/12 N	40	23,5	**12**	7...15	5,8	■	6,3	2 500	-30...+75	62 500 / 27 500	105 000	①
RL 90-18/14 NG	40	23,5	**24**	12...28	5,8	□	5,6	2 500	-20...+75	62 500 / 27 500	105 000	①
RL 90-18/14 N	40	23,5	**24**	12...28	5,8	■	5,6	2 500	-30...+75	62 500 / 27 500	105 000	①
RL 90-18/18 NH	55	32,4	**48**	36...53	6,9	■	14,7	3 500	-30...+65	32 500 / 17 500	55 000	②

Subject to alternations

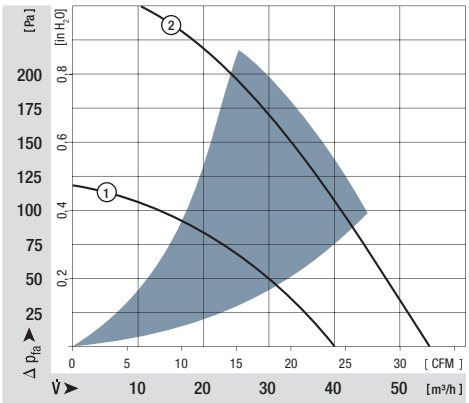

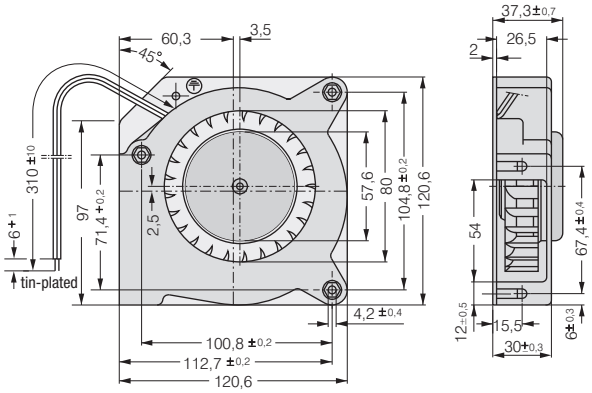

Screw clip M4 or 8-32UNC. Screw-in depth max. 12.5 min. 9.0

max. 80 m³/h

DC centrifugal fans

Series RLF 100 127 x 127 x 25 mm

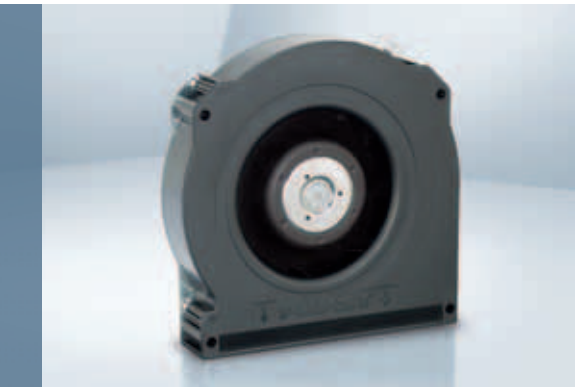

- **Material:** Scroll housing: GRP[1)]
  Impeller: GRP[1)]
  Housing base: Sheet steel
- **Direction of air flow:** Axial: Intake
  Centrifugal: Exhaust
- **Connection:** Via single wires AWG 22, TR 64
- **Highlights:** Optional protective cap for outlet opening
  Backwards-curved impeller
- **Mass:** 320 g

- **Possible special versions:**
  (See chapter DC fans - specials)
  - Speed signal
  - Go / No-go alarm
  - Alarm with limit speed
  - External temperature sensor
  - Internal temperature sensor
  - PWM control input
  - Analogue control input
  - Protection against moisture
  - Type of protection: IP 54

1) Fibreglass-reinforced plastic

Nominal data	Air flow	Air flow	Nominal voltage	Voltage range	Sound power level	Sintec sleeve bearings / Ball bearings	Input power	Nominal speed	Temperature range	Service life L_{10} (40 °C) ebm-papst Standard / Service life L_{10} (T_{max}) ebm-papst Standard	Life expectancy L_{10IPC} (40 °C) see page 17	Curve
Type	**m³/h**	**CFM**	**VDC**	**VDC**	**Bel(A)**	□/■	**Watts**	**rpm**	**°C**	**Hours**	**Hours**	
RLF 100-11/12	64	37,7	**12**	8...15	6,4	■	8,0	5 100	-20...+75	80 000 / 30 000	135 000	①
RLF 100-11/14	64	37,7	**24**	16...30	6,4	■	8,0	5 100	-20...+75	80 000 / 30 000	135 000	①
RLF 100-11/18	64	37,7	**48**	36...60	6,4	■	8,6	5 100	-20...+75	80 000 / 30 000	135 000	①
High speed models with Open Collector Tacho and PWM speed control.												
RLF 100-11/12/2 HP-200	80	47,1	**12**	10...13,2	7,5	■	18,6	6 400	-20...+60	72 500 / 45 000	122 500	②
RLF 100-11/18/2 HP-182	80	47,1	**48**	43...53	7,5	■	17,0	6 400	-20...+70	72 500 / 35 000	122 500	②

Subject to alternations

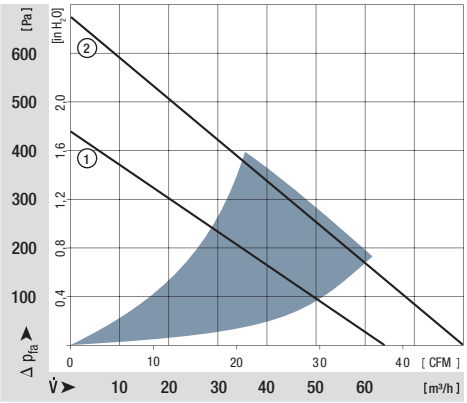

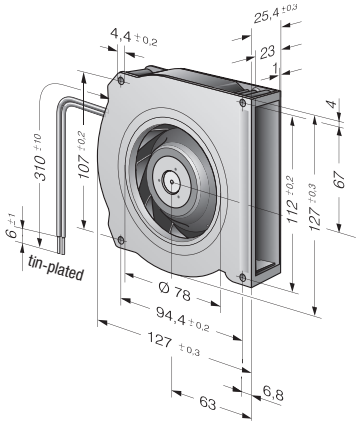

ebmpapst

max. 55 m³/h

DC centrifugal fans

Series RG 90 N 135 x 135 x 38 mm

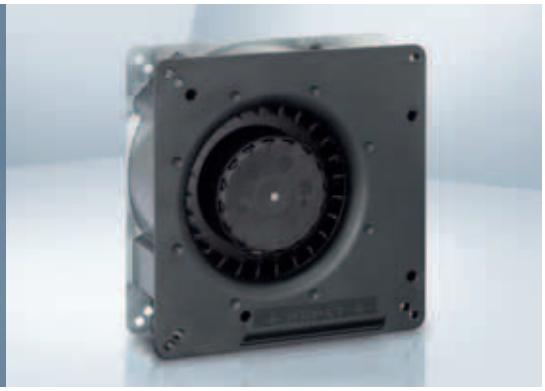

- **Material:** Scroll housing: GRP[1)]
  Impeller: GRP[1)]
  Housing base: Sheet steel
- **Direction of air flow:** Axial: Intake
  Centrifugal: Exhaust
- **Connection:** Via single wires AWG 22, TR 64
  48 V model: Flat plug
  6.3 x 0.8 mm for protective earth
- **Highlights:** Forwards-curved impeller
- **Mass:** 440 g

1) Fibreglass-reinforced plastic

- **Possible special versions:**
  (See chapter DC fans - specials)
  - Speed signal
  - Go / No-go alarm
  - Alarm with limit speed
  - External temperature sensor
  - Internal temperature sensor
  - PWM control input
  - Analogue control input
  - Protection against moisture
  - Protection against salt fog
  - Type of protection: IP 54 / IP 68

Nominal data	Air flow	Air flow	Nominal voltage	Voltage range	Sound power level	Sintec sleeve bearings / Ball bearings	Input power	Nominal speed	Temperature range	Service life L_{10} (40 °C) ebm-papst Standard / Service life L_{10} (T_{max}) ebm-papst Standard	Life expectancy L_{10IPC} (40 °C) see page 17	Curve
Type	**m³/h**	**CFM**	**VDC**	**VDC**	**Bel(A)**	□/■	**Watts**	**rpm**	**°C**	**Hours**	**Hours**	
RG 90-18/12 N	55	32,4	**12**	7...15	5,5	■	6,7	2 200	-30...+75	62 500 / 27 500	105 000	①
RG 90-18/14 NG	55	32,4	**24**	12...28	5,5	□	6,2	2 200	-10...+75	62 500 / 27 500	105 000	①
RG 90-18/14 N	55	32,4	**24**	12...28	5,5	■	6,2	2 200	-30...+75	62 500 / 27 500	105 000	①
RG 90-18/18 N	55	32,4	**48**	36...56	5,5	■	6,1	2 200	-30...+75	62 500 / 27 500	105 000	①

Subject to alternations

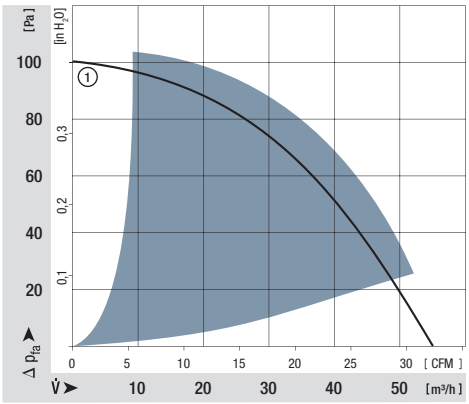

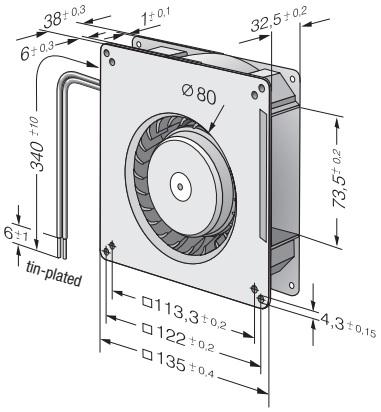

max. 137 m³/h

DC centrifugal fans

Series RG 125 N 180 x 180 x 40 mm

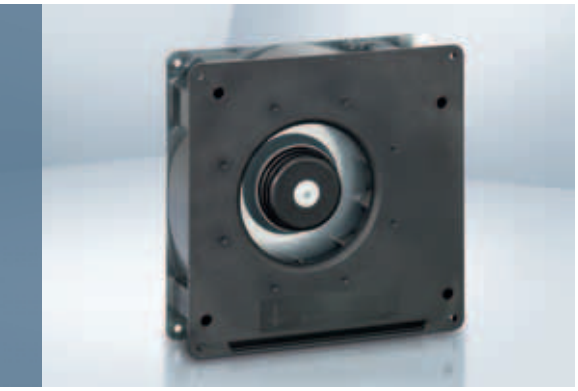

- **Material:** Scroll housing: GRP[1)]
  Impeller: GRP[1)]
  Housing base: Sheet steel
- **Direction of air flow:** Axial: Intake
  Centrifugal: Exhaust
- **Connection:** Via single wires AWG 22, TR 64
  48 V model: Flat plug
  6.3 x 0.8 mm for protective earth
- **Highlights:** Backwards-curved impeller
- **Mass:** 730 g

1) Fibreglass-reinforced plastic

- **Possible special versions:**
  (See chapter DC fans - specials)
  - Speed signal
  - Go / No-go alarm
  - Alarm with limit speed
  - External temperature sensor
  - Internal temperature sensor
  - PWM control input
  - Analogue control input
  - Protection against moisture
  - Protection against salt fog
  - Type of protection: IP 54 / IP 68

Nominal data	Air flow	Air flow	Nominal voltage	Voltage range	Sound power level	Sintec sleeve bearings / Ball bearings	Input power	Nominal speed	Temperature range	Service life L_{10} (40 °C) ebm-papst Standard / Service life L_{10} (T_{max}) ebm-papst Standard	Life expectancy L_{10IPC} (40 °C) see page 17	Curve
Type	**m³/h**	**CFM**	**VDC**	**VDC**	**Bel(A)**	□/■	**Watts**	**rpm**	**°C**	**Hours**	**Hours**	
RG 125-19/12 NM	60,0	35,3	**12**	7...15	4,8	■	2,0	1 750	-30...+75	70 000 / 30 000	117 500	①
RG 125-19/12 N	87,5	51,5	**12**	7...15	5,8	■	5,2	2 550	-30...+75	62 500 / 27 500	105 000	②
RG 125-19/14 NM	60,0	35,3	**24**	12...28	4,8	■	2,0	1 750	-30...+75	70 000 / 30 000	117 500	①
RG 125-19/14 N	87,5	51,5	**24**	12...28	5,8	■	4,9	2 550	-30...+75	62 500 / 27 500	105 000	②
RG 125-19/18 N	87,5	51,5	**48**	36...56	5,8	■	4,8	2 550	-30...+75	62 500 / 27 500	105 000	②
RG 125-19/18 NH	137	80,6	**48**	36...56	7,0	■	19,0	4 000	-20...+70	55 000 / 27 500	92 500	③

Subject to alternations

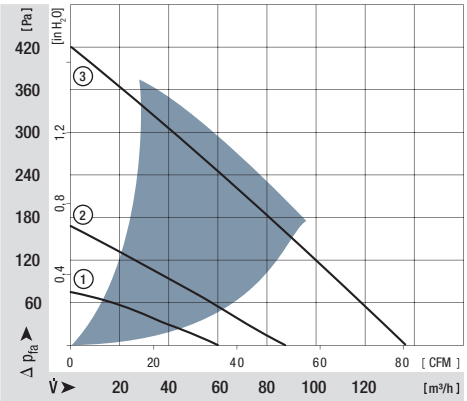

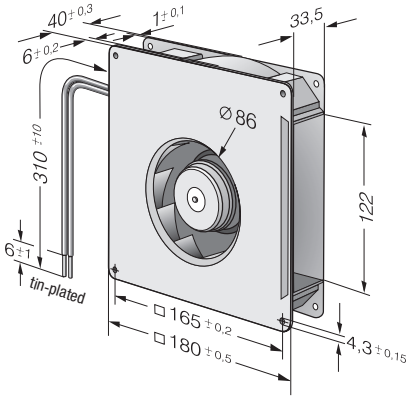

ebmpapst

max. 209 m³/h

DC centrifugal fans

Series RG 160 N 220 x 220 x 56 mm

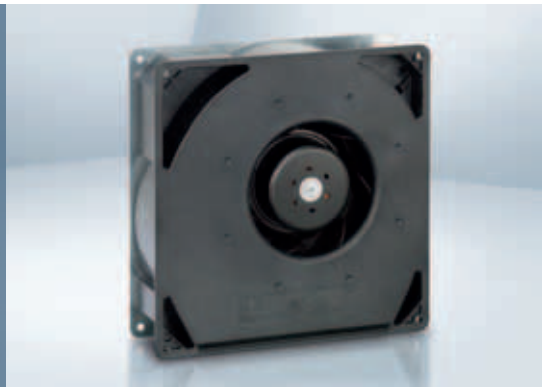

- **Material:** Scroll housing: GRP[1)]
  Impeller: GRP[1)]
  Housing base: Sheet steel
- **Direction of air flow:** Axial: Intake
  Centrifugal: Exhaust
- **Connection:** Via single wires AWG 22, TR 64
  48 V model: Flat plug
  6.3 x 0.8 mm for protective earth
- **Highlights:** Backwards-curved impeller
- **Mass:** 1,4 kg

1) Fibreglass-reinforced plastic

- **Possible special versions:**
  (See chapter DC fans - specials)
  - Speed signal
  - Go / No-go alarm
  - Alarm with limit speed
  - External temperature sensor
  - Internal temperature sensor
  - PWM control input
  - Analogue control input
  - Protection against moisture
  - Protection against salt fog
  - Type of protection: IP 54

Nominal data	Air flow	Air flow	Nominal voltage	Voltage range	Sound power level	Sintec sleeve bearings / Ball bearings	Input power	Nominal speed	Temperature range	Service life L_{10} (40 °C) ebm-papst Standard / Service life L_{10} (T_{max}) ebm-papst Standard	Life expectancy L_{10IPC} (40 °C) see page 17	Curve
Type	**m³/h**	**CFM**	**VDC**	**VDC**	**Bel(A)**	□/■	**Watts**	**rpm**	**°C**	**Hours**	**Hours**	
RG 160-28/12 NM	139	81	**12**	7...14	5,6	■	7,5	1 900	-20...+70	80 000 / 40 000	135 000	①
RG 160-28/12 N	209	123	**12**	7,5...14	6,6	■	21,0	2 850	-20...+70	70 000 / 35 000	117 500	②
RG 160-28/14 NM	139	81	**24**	12...28	5,6	■	7,0	1 900	-20...+70	80 000 / 40 000	135 000	①
RG 160-28/14 N	209	123	**24**	12...28	6,6	■	20,0	2 850	-20...+70	70 000 / 35 000	117 500	②
RG 160-28/18 N	209	123	**48**	28...60	6,6	■	20,0	2 850	-20...+70	70 000 / 35 000	117 500	②

Subject to alternations

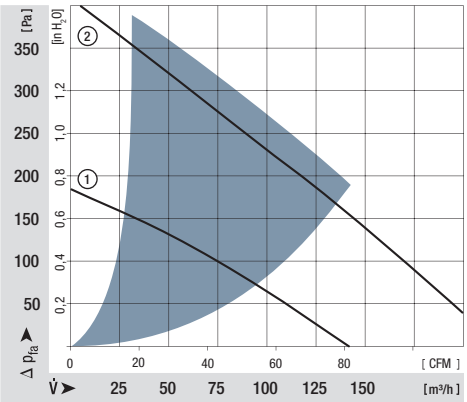

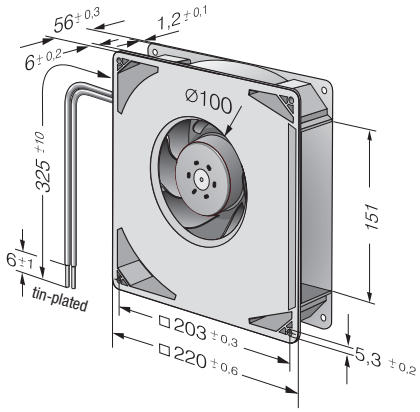

max. **444** m³/h

DC centrifugal fans

Series RG 160 NTD 220 x 220 x 56 mm

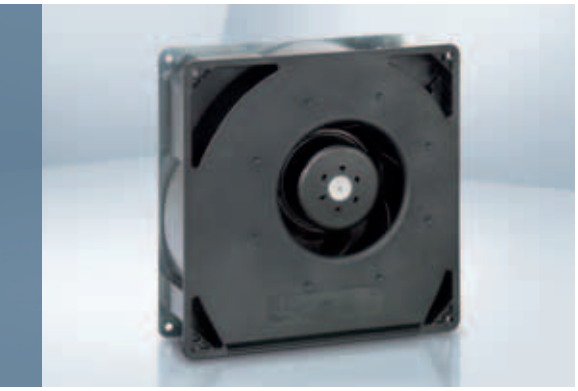

- **Material:** Scroll housing: GRP[1)]
  Impeller: GRP[1)]
  Housing base: Sheet steel
- **Direction of air flow:** Axial: Intake
  Centrifugal: Exhaust
- **Connection:** Via single wires AWG 22, TR 64
  48 V model: Flat plug
  6.3 x 0.8 mm for protective earth
- **Highlights:** 3-phase fan drive with very smooth running
  Backwards-curved impeller
- **Mass:** 1,4 kg

1) Fibreglass-reinforced plastic

- **Possible special versions:**
  (See chapter DC fans - specials)
  - Speed signal
  - Go / No-go alarm
  - Alarm with limit speed
  - External temperature sensor
  - Internal temperature sensor
  - PWM control input
  - Analogue control input
  - Protection against moisture
  - Type of protection: IP 54

	Nominal data	Air flow	Air flow	Nominal voltage	Voltage range	Sound power level	Sintec sleeve bearings / Ball bearings	Input power	Nominal speed	Temperature range	Service life L_{10} (40 °C) ebm-papst Standard / Service life L_{10} (T_{max}) ebm-papst Standard	Life expectancy L_{10IPC} (40 °C) see page 17	Curve
	Type	**m³/h**	**CFM**	**VDC**	**VDC**	**Bel(A)**	□ / ■	**Watts**	**rpm**	**°C**	**Hours**	**Hours**	
min.	RG 160-28/14 NTD...	59	35	**24**	16...28	—	■	2,0	800	-20...+60	55 000 / 35 000	92 500	①
max.		308	181			7,5		64,0	4 200				②
	RG 160-28/14 NTD	308	181	**24**	16...28	7,5	■	64,0	4 200	-20...+60	55 000 / 35 000	92 500	②
	RG 160-28/14 NTDH	370	218	**24**	16...28	7,8	■	101,0	5 000	-20...+60	50 000 / 32 500	85 000	③
min.	RG 160-28/18 NTD...	59	35	**48**	38...57	—	■	2,0	800	-20...+70	55 000 / 27 500	92 500	①
max.		308	181			7,5		59,0	4 200				②
	RG 160-28/18/2 N/2 TDHHP*	444	261	**48**	36...60	8,5	■	159	6 000	-20...+65	40 000 / 22 500	67 500	④

Subject to alternations

Models RG 160-28/14 NTD... and RG 160-28/18 NTD... are available in customer-specific, custom-developed variants only.
The data specified here are technically feasible benchmark values. The fans can be specially adapted to your application with signal outputs and control inputs.
*The specific service life is valid when an external capacitor is wired between the plus and minus wires.
Please note the wiring suggestion.

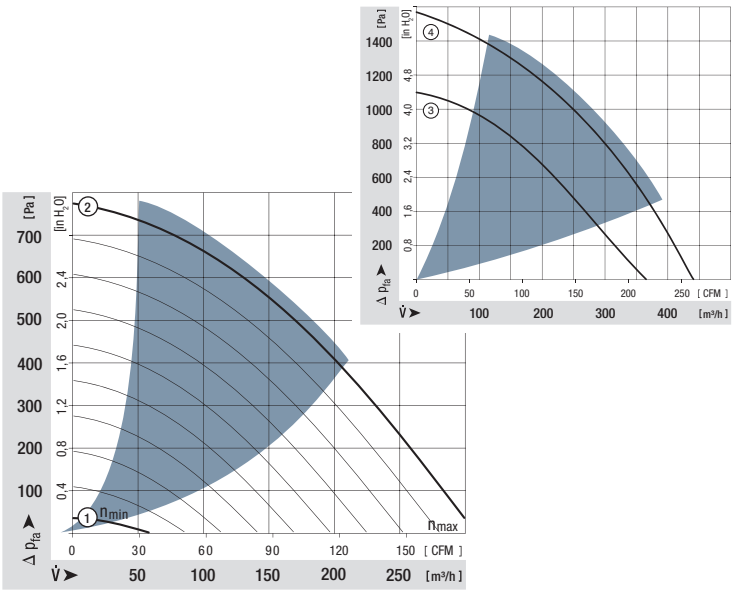

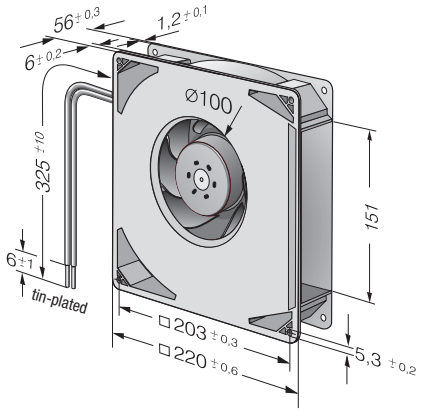

ebmpapst

max. 930 m³/h

S-Force

DC centrifugal fans

Series RG 190 TD 225 x 225 x 85 mm

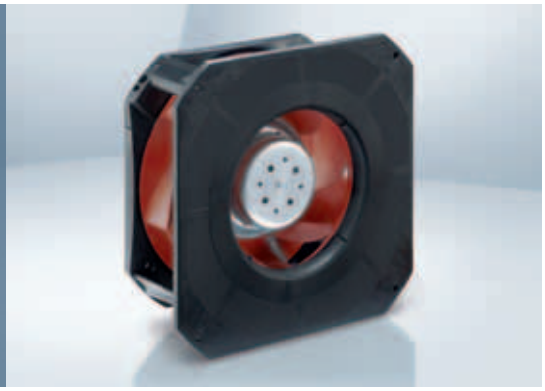

- **Material:** Scroll housing: GRP[1)] Impeller: GRP[1)]
- **Direction of air flow:** Axial: Intake, Centrifugal: Exhaust
- **Direction of rotation:** Clockwise, seen on rotor
- **Connection:** Via single wires AWG 18, 20 or AWG 22, TR 64, speed signal and control input AWG 22
- **Highlights:** 3-phase fan drive with very smooth running and high efficiency Backwards-curved RadiCal impeller
- **Mass:** 1210 g

1) Fibreglass-reinforced plastic

- **Possible special versions:** (See chapter DC fans - specials)
  - Speed signal
  - Go / No-go alarm
  - Alarm with limit speed
  - External temperature sensor
  - Internal temperature sensor
  - PWM control input
  - Analogue control input
  - Multi-option control input
  - Protection against moisture
  - Protection against salt fog
  - Type of protection: IP 54

Nominal data	Air flow	Air flow	Nominal voltage	Voltage range	Sound power level	Sintec sleeve bearings / Ball bearings	Input power	Nominal speed	Temperature range	Service life L_{10} (40 °C) ebm-papst Standard / Service life L_{10} (T_{max}) ebm-papst Standard	Life expectancy L_{10IPC} (40 °C) see page 17	Curve
Type	**m³/h**	**CFM**	**VDC**	**VDC**	**Bel(A)**	□/■	**Watts**	**rpm**	**°C**	**Hours**	**Hours**	
RG 190-39/14/2 TDMLO	630	371	**24**	16...30	7,6	■	54	3 000	-20...+60	55 000 / 35 000	92 500	①
RG 190-39/14/2 TDMO	820	482	**24**	16...36	7,9	■	113	3 900	-20...+65	52 500 / 30 000	87 500	②
RG 190-39/18/2 TDMLO*	630	371	**48**	36...57	7,6	■	52	3 000	-20...+65	55 000 / 30 000	92 500	①
RG 190-39/18/2 TDMO	820	482	**48**	36...72	7,9	■	113	3 900	-20...+65	52 500 / 30 000	87 500	②
RG 190-39/18/2 TDO	930	547	**48**	36...72	8,3	■	140	4 400	-20...+65	40 000 / 22 500	67 500	③

* provisional

Subject to alternations

Speed control range from 800 rpm at 7 % PWM up to nominal speed at > 90 % PWM. Standstill at 0 % PWM, standstill if control cable is interrupted.

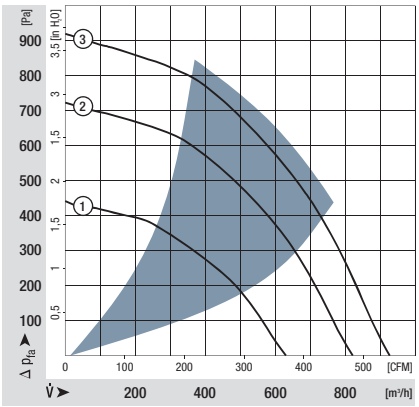

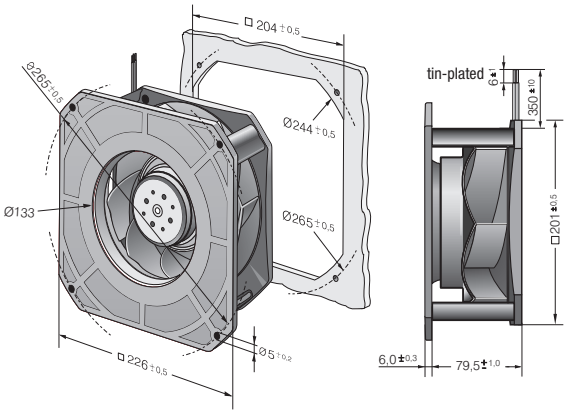

max. 1280 m³/h

S-Force

DC centrifugal fans

Series RG 220 TD 270 x 270 x 99 mm

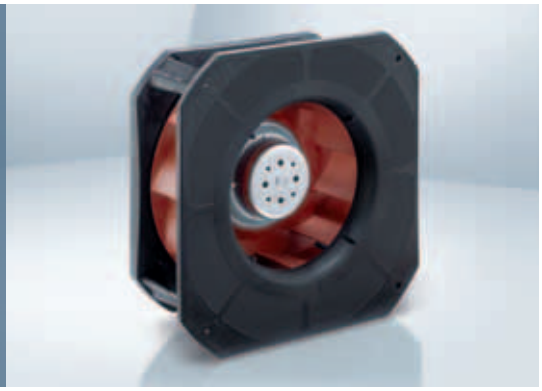

- **Material:** Scroll housing: GRP[1)]
  Impeller: GRP[1)]
- **Direction of air flow:** Axial: Intake
  Centrifugal: Exhaust
- **Direction of rotation:** Clockwise, seen on rotor
- **Connection:** Via single wires AWG 18, 20 or AWG 22, TR 64, speed signal and control input AWG 22
- **Highlights:** 3-phase fan drive with very smooth running and high efficiency
  Backwards-curved impeller
- **Mass:** 1870 g

1) Fibreglass-reinforced plastic

- **Possible special versions:**
  (See chapter DC fans - specials)
  - Speed signal
  - Go / No-go alarm
  - Alarm with limit speed
  - External temperature sensor
  - Internal temperature sensor
  - PWM control input
  - Analogue control input
  - Protection against moisture
  - Protection against salt fog
  - Type of protection: IP 54

Nominal data	Air flow	Air flow	Nominal voltage	Voltage range	Sound power level	Sintec sleeve bearings / Ball bearings	Input power	Nominal speed	Temperature range	Service life L_{10} (40 °C) ebm-papst Standard / Service life L_{10} (T_{max}) ebm-papst Standard	Life expectancy L_{10IPC} (40 °C) see page 17	Curve
Type	**m³/h**	**CFM**	**VDC**	**VDC**	**Bel(A)**	□ / ■	**Watts**	**rpm**	**°C**	**Hours**	**Hours**	
RG 220-44/14/2 TDM0*	1090	641	**24**	16...36	7,7	■	82	3 000	-20...+55	75 000 / 52 500	127 500	①
RG 220-44/18/2 TDM0*	1090	641	**48**	36...72	7,7	■	80	3 000	-20...+55	75 000 / 52 500	127 500	①
RG 220-44/18/2 TD0*	1280	753	**48**	36...72	8,0	■	140	3 500	-20...+55	55 000 / 40 000	92 500	②

* provisional

Subject to alternations

Speed control range from 800 rpm at 7 % PWM up to nominal speed at > 90 % PWM. Standstill at 0 % PWM, standstill if control cable is interrupted.

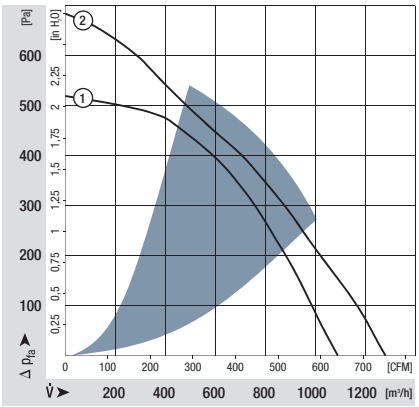

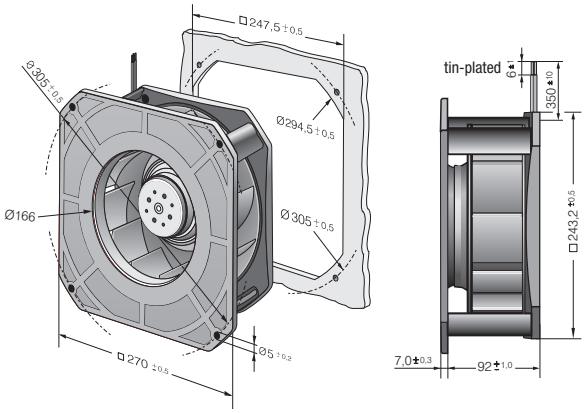

Guard grilles
p. 245

ebmpapst

max. 1450 m³/h

S-Force

DC centrifugal fans

Series RG 225 TD 270 x 270 x 119 mm

- **Material:** Scroll housing: GRP[1)] Impeller: GRP[1)]
- **Direction of air flow:** Axial: Intake, Centrifugal: Exhaust
- **Direction of rotation:** Clockwise, seen on rotor
- **Connection:** Via single wires AWG 18, 20 or AWG 22, TR 64, speed signal and control input AWG 22
- **Highlights:** 3-phase fan drive with very smooth running and high efficiency Backwards-curved RadiCal impeller
- **Mass:** 1750 g

1) Fibreglass-reinforced plastic

- **Possible special versions:** (See chapter DC fans - specials)
  - Speed signal
  - Go / No-go alarm
  - Alarm with limit speed
  - External temperature sensor
  - Internal temperature sensor
  - PWM control input
  - Analogue control input
  - Protection against moisture
  - Protection against salt fog
  - Type of protection: IP 54

	Nominal data	Air flow	Air flow	Nominal voltage	Voltage range	Sound power level	Sintec sleeve bearings / Ball bearings	Input power	Nominal speed	Temperature range	Service life L_{10} (40 °C) ebm-papst Standard / Service life L_{10} (T_{max}) ebm-papst Standard	Life expectancy L_{10IPC} (40 °C) see page 17	Curve
	Type	**m³/h**	**CFM**	**VDC**	**VDC**	**Bel(A)**	□/■	**Watts**	**rpm**	**°C**	**Hours**	**Hours**	
	RG 225-55/14/2 TDMLO	1040	612	**24**	16...36	7,3	■	65	2 400	-20...+55	72 500 / 52 500	122 500	①
	RG 225-55/18/2 TDMLO*	1040	612	**48**	36...72	7,3	■	65	2 400	-20...+55	72 500 / 52 500	122 500	①
	RG 225-55/18/2 TDMO	1210	712	**48**	36...72	7,9	■	116	2 800	-20...+55	55 000 / 40 000	92 500	②
NEW	RG 225-55/18/2 TDO	1450	853	**48**	36...60	8,1	■	192	3 300	-20...+40	30 000 / 30 000	50 000	③

* provisional

Subject to alternations

Speed control range from 800 rpm at 7 % PWM up to nominal speed at > 90 % PWM. Standstill at 0 % PWM, standstill if control cable is interrupted.
The specific service life is valid when an external capacitor is wired between the plus and minus wires.
Please note the wiring suggestion.

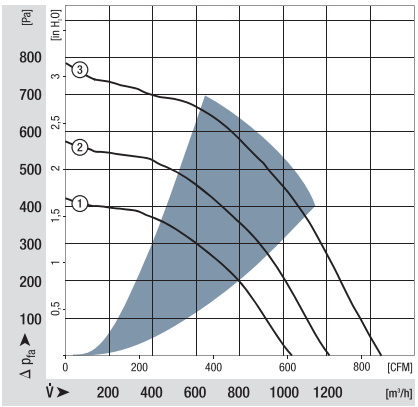

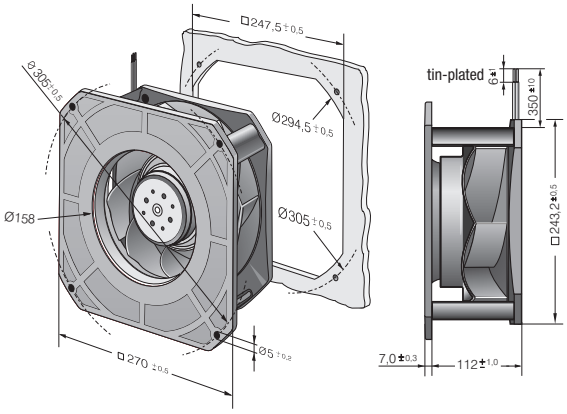

max. 220 m³/h

S-Force

DC centrifugal fans

Series RET 97 TD Ø 97 x 41 mm

- **Material:** Impeller: Galvanised sheet steel
- **Direction of air flow:** Axial: Intake, Centrifugal: Exhaust
- **Direction of rotation:** Clockwise, seen on rotor
- **Connection:** Via single wires AWG 18, 20 or AWG 22, TR 64, speed signal and control input AWG 22
- **Highlights:** 3-phase fan drive with very smooth running and high efficiency
  Forwards-curved impeller
  Fan requires a scroll housing
- **Mass:** 430 g

- **Possible special versions:**
  (See chapter DC fans - specials)
  - Speed signal
  - Go / No-go alarm
  - Alarm with limit speed
  - External temperature sensor
  - Internal temperature sensor
  - PWM control input
  - Analogue control input
  - Protection against moisture

Nominal data	Air flow	Air flow	Nominal voltage	Voltage range	Sound power level	Sintec sleeve bearings / Ball bearings	Input power	Nominal speed	Temperature range	Service life L_{10} (40 °C) ebm-papst Standard / Service life L_{10} (T_{max}) ebm-papst Standard	Life expectancy L_{10IPC} (40 °C) see page 17	Curve
Type	**m³/h**	**CFM**	**VDC**	**VDC**	**Bel(A)**	□ / ■	**Watts**	**rpm**	**°C**	**Hours**	**Hours**	
RET 97-25/14/2 TDP	220	129	**24**	16...36	8,1	■	77	6 000	-20...+60	80 000 / 50 000	135 000	①
RET 97-25/18/2 TDP	220	129	**48**	36...60	8,1	■	76	6 000	-20...+60	80 000 / 50 000	135 000	①

Subject to alternations

Speed control range from 800 rpm at 7 % PWM up to nominal speed at > 90 % PWM. Standstill at 0 % PWM, standstill if control cable is interrupted.
The specific service life is valid when an external capacitor is wired between the plus and minus wires.
Please note the wiring suggestion.
All nominal data were measured in the scroll housing.

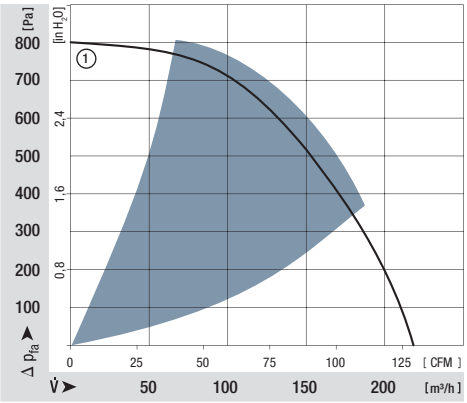

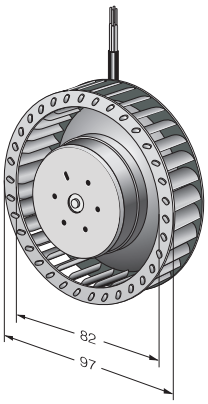

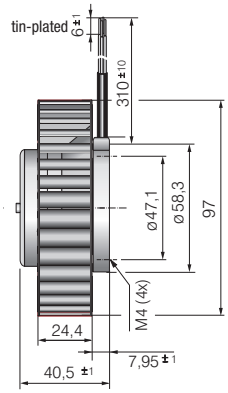

Inlet nozzles
from p. 248

ebmpapst

max. 104 m³/h

DC centrifugal fans

Series REF 100 Ø 104 x 25 mm

- **Material:** Impeller: GRP[1)]
- **Direction of air flow:** Axial: Intake
  Centrifugal: Exhaust
- **Direction of rotation:** Clockwise, seen on rotor
- **Connection:** Via single wires AWG 22, TR 64
- **Highlights:** Backwards-curved impeller
- **Mass:** 160 g

- **Possible special versions:**
  (See chapter DC fans - specials)
  - Speed signal
  - Go / No-go alarm
  - Alarm with limit speed
  - External temperature sensor
  - Internal temperature sensor
  - PWM control input
  - Analogue control input
  - Protection against moisture
  - Type of protection: IP 54

1) Fibreglass-reinforced plastic

Nominal data	Air flow	Air flow	Nominal voltage	Voltage range	Sound power level	Sintec sleeve bearings / Ball bearings	Input power	Nominal speed	Temperature range	Service life L_{10} (40 °C) ebm-papst Standard / Service life L_{10} (T_{max}) ebm-papst Standard	Life expectancy L_{10IPC} (40 °C) see page 17	Curve
Type	**m³/h**	**CFM**	**VDC**	**VDC**	**Bel(A)**	□/■	**Watts**	**rpm**	**°C**	**Hours**	**Hours**	
REF 100-11/12	86	50,6	**12**	8...15	6,3	■	7,5	5 400	-20...+75	80 000 / 30 000	135 000	①
REF 100-11/14	86	50,6	**24**	16...30	6,3	■	7,5	5 400	-20...+75	80 000 / 30 000	135 000	①
REF 100-11/18	86	50,6	**48**	36...60	6,3	■	8,2	5 400	-20...+75	80 000 / 30 000	135 000	①
REF 100-11/18 H	104	61,2	**48**	36...56	6,9	■	14,8	6 700	-20...+70	67 500 / 32 500	115 000	②

Subject to alternations

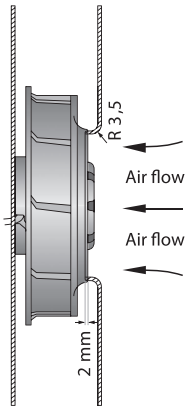

The air flow and noise level of the centrifugal fans without external housing depend on their individual installation conditions. The stated air flow and noise level were recorded under the following measurement parameters:
Centrifugal fan mounted on a foundation plate 127 x 127 mm.
Cover plate 127 x 127 mm, with an air inlet opening Ø 70 mm, arranged concentrically to the impeller.

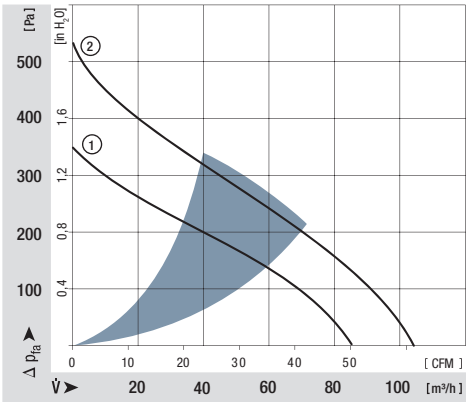

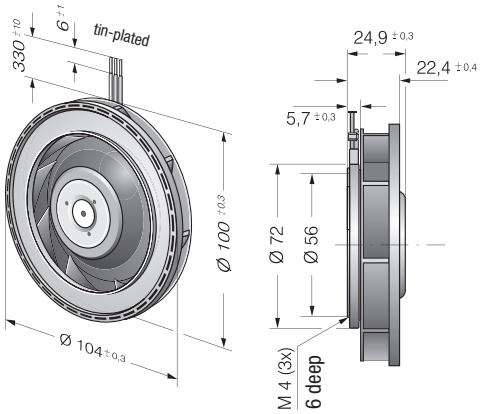

max. 190 m³/h

DC centrifugal fans

Series RER 101 Ø 101 x 52 mm

- **Material:** Impeller: GRP[1)]
- **Direction of air flow:** Axial: Intake
  Centrifugal: Exhaust
- **Direction of rotation:** Clockwise, seen on rotor
- **Connection:** Via single wires AWG 22, TR 64
- **Highlights:** Backwards-curved impeller
- **Mass:** 305 g

- **Possible special versions:**
  (See chapter DC fans - specials)
  - Speed signal
  - Go / No-go alarm
  - Alarm with limit speed
  - External temperature sensor
  - Internal temperature sensor
  - PWM control input
  - Analogue control input
  - Protection against moisture

1) Fibreglass-reinforced plastic

Nominal data	Air flow	Air flow	Nominal voltage	Voltage range	Sound power level	Sintec sleeve bearings / Ball bearings	Input power	Nominal speed	Temperature range	Service life L_{10} (40 °C) ebm-papst Standard / Service life L_{10} (T_{max}) ebm-papst Standard	Life expectancy L_{10IPC} (40 °C) see page 17	Curve
Type	**m³/h**	**CFM**	**VDC**	**VDC**	**Bel(A)**	□ / ■	**Watts**	**rpm**	**°C**	**Hours**	**Hours**	
RER 101-36/12 NH	162	95	**12**	9...13,6	6,9	■	13,0	5 000	-20...+70	65 000 / 32 500	110 000	②
RER 101-36/12 NHH	190	112	**12**	9...13,6	7,2	■	20,5	6 000	-20...+70	60 000 / 30 000	102 500	①
RER 101-36/14 NHH	190	112	**24**	18...27,2	7,2	■	22,5	6 050	-20...+70	60 000 / 30 000	102 500	①
RER 101-36/18 NHH	190	112	**48**	36...60	7,2	■	19,4	5 850	-20...+70	60 000 / 30 000	102 500	①

Subject to alternations

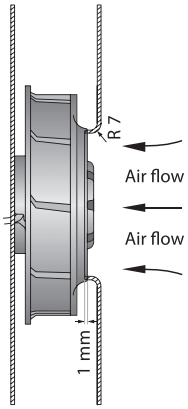

The air flow and noise level of the centrifugal fans without external housing depend on their individual installation conditions. The stated air flow and noise level were recorded under the following measurement parameters:
Centrifugal fan mounted on a foundation plate 148 x 148 mm. Cover plate 148 x 148 mm, with an air inlet opening Ø 66 mm, arranged concentrically to the impeller.

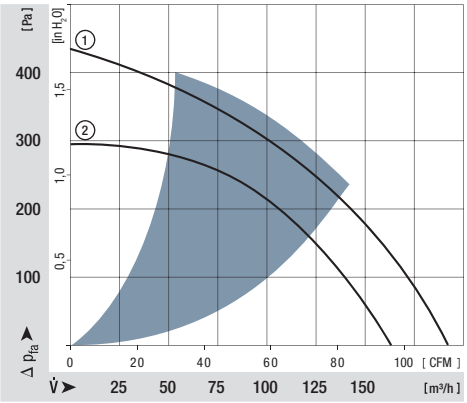

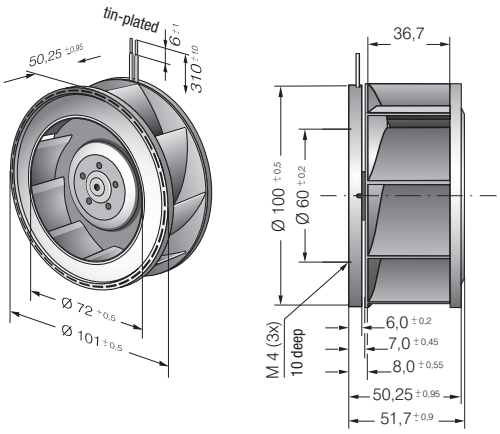

Inlet nozzles
from p. 248

ebmpapst

max. 390 m³/h

S-Force

DC centrifugal fans

Series RER 120 TD Ø 120 x 54 mm

- **Material:** Impeller: GRP[1)]
- **Direction of air flow:** Axial: Intake
  Centrifugal: Exhaust
- **Direction of rotation:** Clockwise, seen on rotor
- **Connection:** Via single wires AWG 18, 20 or AWG 22, TR 64, speed signal and control input AWG 22
- **Highlights:** 3-phase fan drive with very smooth running and high efficiency
  Backwards-curved impeller
- **Mass:** 430 g

1) Fibreglass-reinforced plastic

- **Possible special versions:**
  (See chapter DC fans - specials)
  - Speed signal
  - Go / No-go alarm
  - Alarm with limit speed
  - External temperature sensor
  - Internal temperature sensor
  - PWM control input
  - Analogue control input
  - Protection against moisture

Nominal data	Air flow	Air flow	Nominal voltage	Voltage range	Sound power level	Sintec sleeve bearings / Ball bearings	Input power	Nominal speed	Temperature range	Service life L_{10} (40 °C) ebm-papst Standard / Service life L_{10} (T_{max}) ebm-papst Standard	Life expectancy L_{10IPC} (40 °C) see page 17	Curve
Type	**m³/h**	**CFM**	**VDC**	**VDC**	**Bel(A)**	□/■	**Watts**	**rpm**	**°C**	**Hours**	**Hours**	
RER 120-26/14/2 TDMP*	320	188	**24**	16...32	tbd	■	51	5 200	-20...+60	60 000 / 37 500	102 500	①
RER 120-26/14/2 TDP	377	222	**24**	16...32	8,2	■	78	6 100	-20...+60	55 000 / 35 000	92 500	②
RER 120-26/18/2 TDMP*	320	188	**48**	36...60	tbd	■	51	5 200	-20...+60	57 500 / 35 000	97 500	①
RER 120-26/18/2 TDP	390	230	**48**	36...60	8,3	■	92	6 300	-20...+60	50 000 / 30 000	85 000	③

* provisional

Subject to alternations

Speed control range from 800 rpm at 7 % PWM up to nominal speed at > 90 % PWM. Standstill at 0 % PWM, standstill if control cable is interrupted.
The specific service life is valid when an external capacitor is wired between the plus and minus wires.
Please note the wiring suggestion.

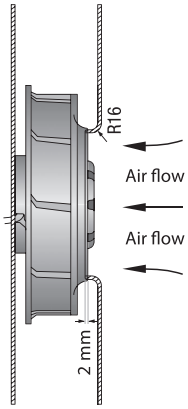

The air flow and noise level of the centrifugal fans without external housing depend on their individual installation conditions. The stated air flow and noise level were recorded under the following measurement parameters:
Centrifugal fan mounted on a foundation plate 140 x 140 mm.
Cover plate 140 x 140 mm, with an air inlet opening Ø 94,4 mm, arranged concentrically to the fan impeller.

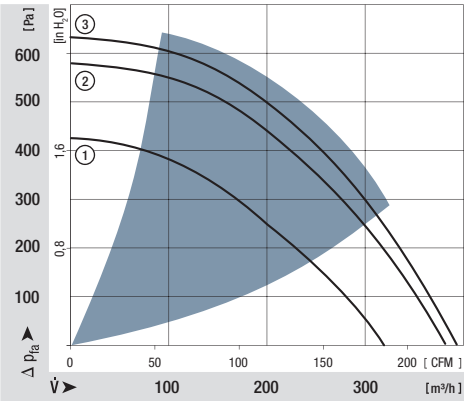

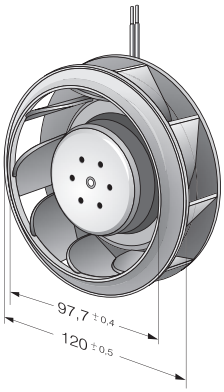

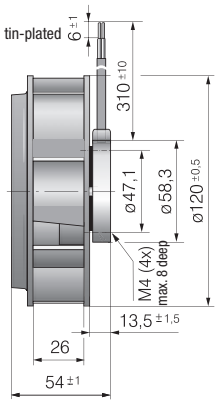

max. 250 m³/h

DC centrifugal fans

Ø 120 mm

- **Material:** Impeller: PA 6.6 plastic, fibreglass-reinforced
  Rotor: Galvanised
- **Number of blades:** 9
- **Direction of rotation:** Clockwise, seen on rotor
- **Type of protection:** IP 20
- **Insulation class:** "B"
- **Mounting position:** Any
- **Condensate discharges:** None
- **Operation mode:** Continuous operation (S1)
- **Bearings:** Maintenance-free ball bearings

Nominal data		Curve	Nominal voltage	Voltage range	Air flow	Speed / rpm	Input power	Current draw	Sound power level	Perm. amb. temp.	Technical features and electrical connections
Type	**Motor**		**VDC**	**VDC**	**m³/h**	**rpm**	**W**	**A**	**dB(A)**	**°C**	
R1G 120	M1G 045-BE	A	24	16-28	250	4060	26	1,20	62	-25..+60	p. 255 / G)
R1G 120	M1G 045-BE	A	48	36-57	250	4060	26	0,60	62	-25..+60	p. 255 / G)

Subject to alternations

Curve:

U_N = nominal voltage (24 V /48 V)

U_R = overvoltage (28 V / 57 V)

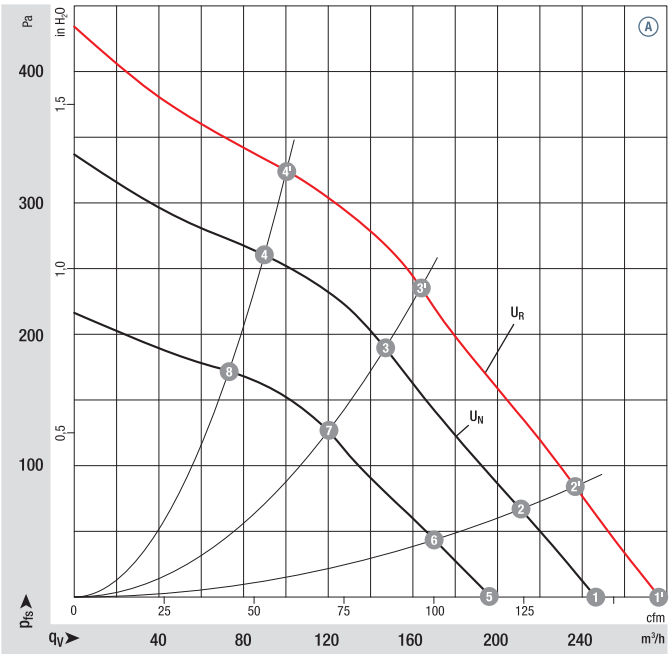

	n rpm	P_{ed} W	Lp_A dB(A)	η_{tL} %
A 1'	4520	36	65	—
A 2'	4500	36	64	27
A 3'	4540	36	61	45
A 4'	4750	32	64	39
A 1	4060	26	62	—
A 2	4000	26	61	27
A 3	4050	26	58	45
A 4	4200	23	61	39
A 5	3270	14	56	—
A 6	3250	14	55	27
A 7	3280	14	53	45
A 8	3400	13	56	39

Air performance measured as per: ISO 5801, Installation category A, with ebm-papst inlet nozzle without protection against accidental contact. Suction-side noise levels: LWA as per ISO 13347, LpA measured at 1 m distance to fan axis. The acoustic values given are only valid under the measurment conditions listed and may vary depending on the installation situation. With any deviation to the standard setup, the specific values have to be checked and reviewed once installed or fitted!
For detailed information see http://www.ebmpapst.com/general conditions

ebmpapst

- **Technical features:** See electrical connections p. 255
- **Cable exit:** Axial
- **Protection class:** I
- **Product conforming to standards:** EN 60950-1
- **Approvals:** Ⓐ (48 VDC) CCC

Mass centrifugal fans

Centrifugal fans	kg	Inlet nozzle (long)
R1G 120-AD13 -02	0,5	96120-2-4013
R1G 120-AD11 -02	0,5	96120-2-4013

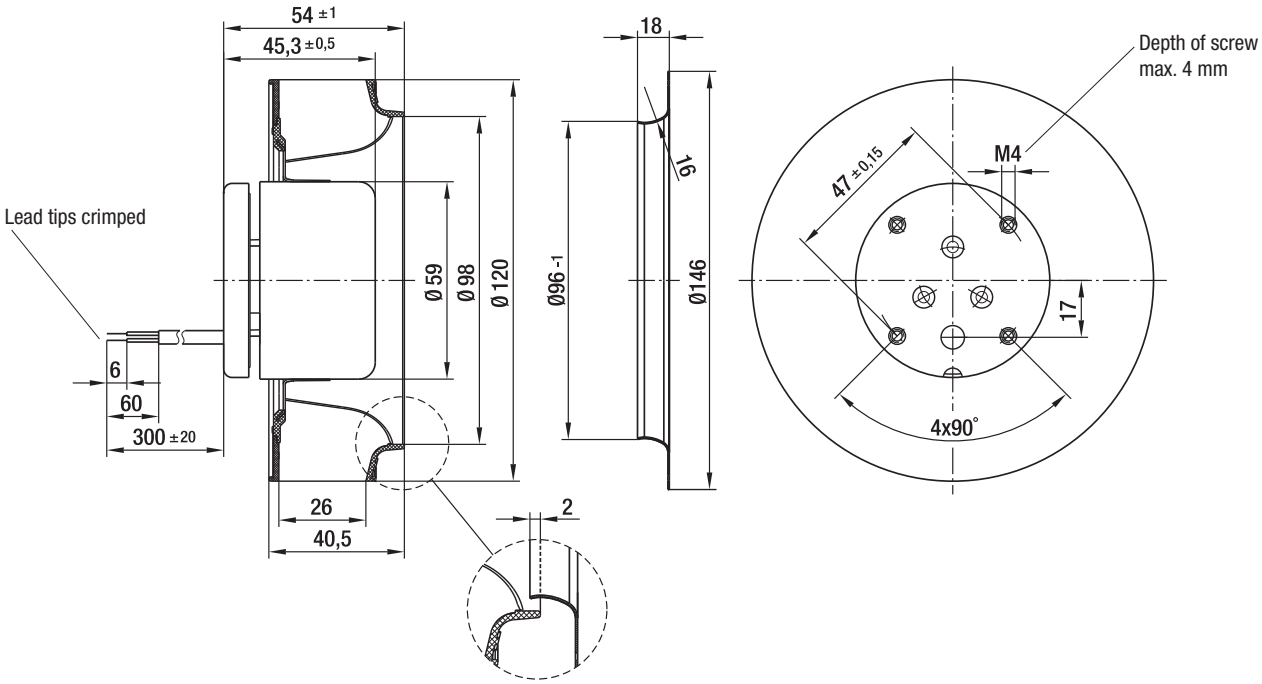

max. 166 m³/h

DC centrifugal fans

Series RER 125 N Ø 138 x 35 mm

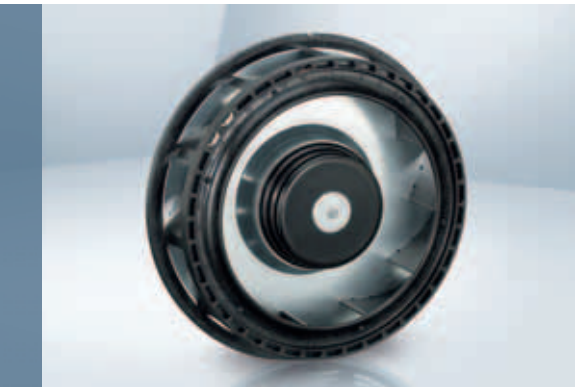

- **Material:** Impeller: GRP[1)]
- **Direction of air flow:** Axial: Intake
  Centrifugal: Exhaust
- **Direction of rotation:** Clockwise, seen on rotor
- **Connection:** Via single wires AWG 22, TR 64
- **Highlights:** Backwards-curved impeller
- **Mass:** 320 g

- **Possible special versions:**
  (See chapter DC fans - specials)
  - Speed signal
  - Go / No-go alarm
  - Alarm with limit speed
  - External temperature sensor
  - Internal temperature sensor
  - PWM control input
  - Analogue control input
  - Protection against moisture
  - Protection against salt fog
  - Type of protection: IP 54 / IP 68

1) Fibreglass-reinforced plastic

Nominal data	Air flow	Air flow	Nominal voltage	Voltage range	Sound power level	Sintec sleeve bearings / Ball bearings	Input power	Nominal speed	Temperature range	Service life L_{10} (40 °C) ebm-papst Standard / Service life L_{10} (T_{max}) ebm-papst Standard	Life expectancy L_{10IPC} (40 °C) see page 17	Curve
Type	**m³/h**	**CFM**	**VDC**	**VDC**	**Bel(A)**	□ / ■	**Watts**	**rpm**	**°C**	**Hours**	**Hours**	
RER 125-19/12 N	110	64,7	**12**	7...15	5,7	■	4,6	2 650	-30...+75	62 500 / 27 500	105 000	①
RER 125-19/14 N	110	64,7	**24**	12...28	5,7	■	4,3	2 650	-30...+75	62 500 / 27 500	105 000	①
RER 125-19/14 NH	166	97,7	**24**	12...28	7,0	■	13,0	4 000	-20...+70	55 000 / 27 500	92 500	②
RER 125-19/18 N	110	64,7	**48**	36...56	5,7	■	4,2	2 650	-30...+75	62 500 / 27 500	105 000	①

Subject to alternations

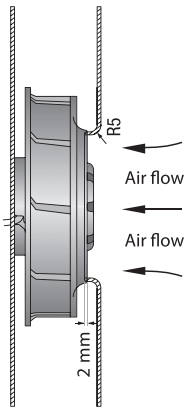

The air flow and noise level of the centrifugal fans without external housing depend on their individual installation conditions. The stated air flow and noise level were recorded under the following measurement parameters:
Centrifugal fan mounted on a foundation plate 120 x 120 mm.
Cover plate 120 x 120 mm, with an air inlet opening Ø 86 mm, arranged concentrically to the impeller.

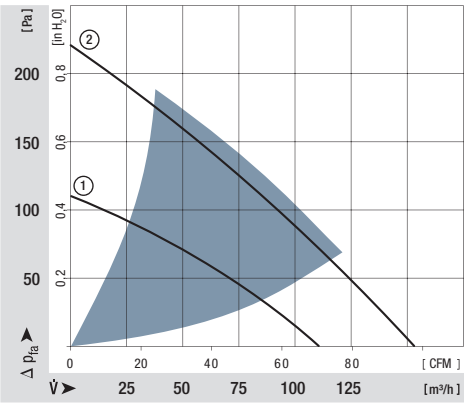

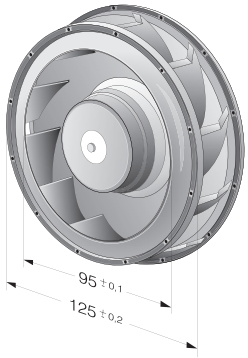

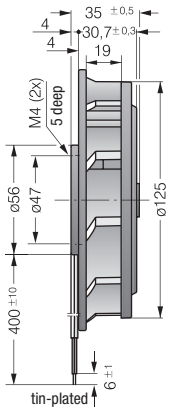

ebmpapst

max. 565 m³/h

S-Force

DC centrifugal fans

Series RER 133 TD Ø 133 x 91 mm

- **Material:** Impeller: GRP[1)]
- **Direction of air flow:** Axial: Intake
  Centrifugal: Exhaust
- **Direction of rotation:** Clockwise, seen on rotor
- **Connection:** Via single wires AWG 18, 20 or AWG 22, TR 64, speed signal and control input AWG 22
- **Highlights:** 3-phase fan drive with very smooth running and high efficiency
  Backwards-curved impeller
- **Mass:** 890 g

1) Fibreglass-reinforced plastic

- **Possible special versions:**
  (See chapter DC fans - specials)
  - Speed signal
  - Go / No-go alarm
  - Alarm with limit speed
  - External temperature sensor
  - Internal temperature sensor
  - PWM control input
  - Analogue control input
  - Multi-option control input
  - Protection against moisture
  - Protection against salt fog
  - Type of protection: IP 54

Nominal data	Air flow	Air flow	Nominal voltage	Voltage range	Sound power level	Sintec sleeve bearings / Ball bearings	Input power	Nominal speed	Temperature range	Service life L_{10} (40 °C) ebm-papst Standard / Service life L_{10} (T_{max}) ebm-papst Standard	Life expectancy L_{10IPC} (40 °C) see page 17	Curve
Type	**m³/h**	**CFM**	**VDC**	**VDC**	**Bel(A)**	□/■	**Watts**	**rpm**	**°C**	**Hours**	**Hours**	
RER 133-41/14/2 TDMP	460	271	**24**	16...30	tbd	■	58	5 000	-20...+65	72 500 / 40 000	122 500	①
RER 133-41/14/2 TDP*	565	332	**24**	16...36	tbd	■	90	6 000	-20...+65	70 000 / 37 500	117 500	②
RER 133-41/18/2 TDMP*	460	271	**48**	36...57	tbd	■	50	5 000	-20...+65	72 500 / 40 000	122 500	①
RER 133-41/18/2 TDP	565	332	**48**	36...72	8,2	■	87	6 000	-20...+65	70 000 / 37 500	117 500	②

* provisional

Subject to alternations

Speed control range from 800 rpm at 7 % PWM up to nominal speed at > 90 % PWM. Standstill at 0 % PWM, standstill if control cable is interrupted.

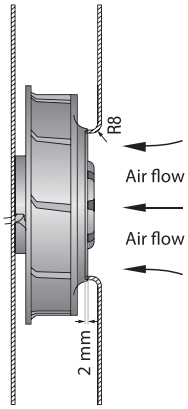

The air flow and noise level of the centrifugal fans without external housing depend on their individual installation conditions. The stated air flow and noise level were recorded under the following measurement parameters:
Centrifugal fan mounted on a foundation plate 140 x 140 mm.
Cover plate 140 x 140 mm, with an air inlet opening Ø 87 mm, arranged concentrically to the impeller.

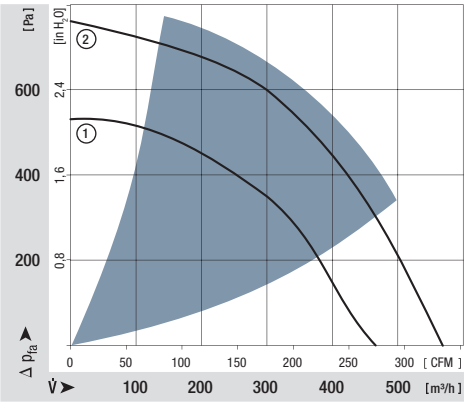

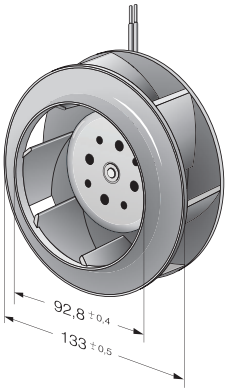

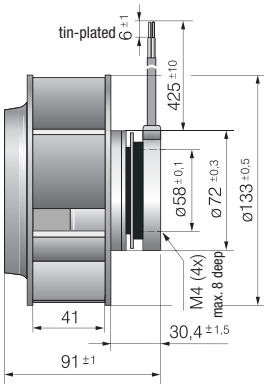

max. 255 m³/h

DC centrifugal fans

Series RER 160 N Ø 165 x 51 mm

- **Material:** Impeller: GRP[1)]
- **Direction of air flow:** Axial: Intake
  Centrifugal: Exhaust
- **Direction of rotation:** Counter-clockwise, seen on rotor
- **Connection:** Via single wires AWG 22, TR 64
- **Highlights:** Backwards-curved impeller
- **Mass:** 590 g

- **Possible special versions:**
  (See chapter DC fans - specials)
  - Speed signal
  - Go / No-go alarm
  - Alarm with limit speed
  - External temperature sensor
  - Internal temperature sensor
  - PWM control input
  - Analogue control input
  - Protection against moisture
  - Protection against salt fog
  - Type of protection: IP 54

1) Fibreglass-reinforced plastic

Nominal data	Air flow	Air flow	Nominal voltage	Voltage range	Sound power level	Sintec sleeve bearings / Ball bearings	Input power	Nominal speed	Temperature range	Service life L_{10} (40 °C) ebm-papst Standard / Service life L_{10} (T_{max}) ebm-papst Standard	Life expectancy L_{10IPC} (40 °C) see page 17	Curve
Type	**m³/h**	**CFM**	**VDC**	**VDC**	**Bel(A)**	□ / ■	**Watts**	**rpm**	**°C**	**Hours**	**Hours**	
RER 160-28/12 N	255	150	**12**	7...14	6,4	■	19,0	3 000	-20...+70	75 000 / 37 500	127 500	①
RER 160-28/14 N	255	150	**24**	12...28	6,4	■	19,0	3 000	-20...+70	75 000 / 37 500	127 500	①
RER 160-28/18 N	255	150	**48**	28...60	6,4	■	19,0	3 000	-20...+70	75 000 / 37 500	127 500	①

Subject to alternations

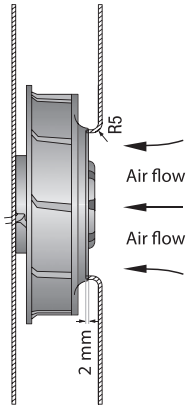

The air flow and noise level of the centrifugal fans without external housing depend on their individual installation conditions. The stated air flow and noise level were recorded under the following measurement parameters:
Centrifugal fan mounted on a foundation plate 260 x 260 mm.
Cover plate 260 x 260 mm, with an air inlet opening Ø 100 mm, arranged concentrically to the impeller.

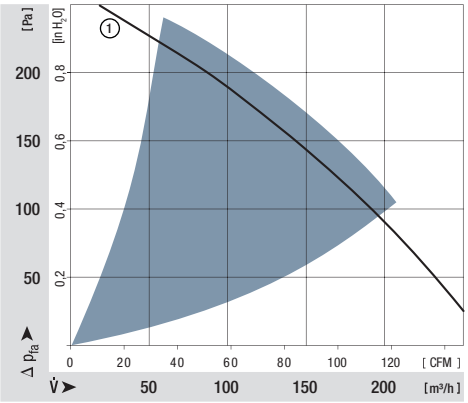

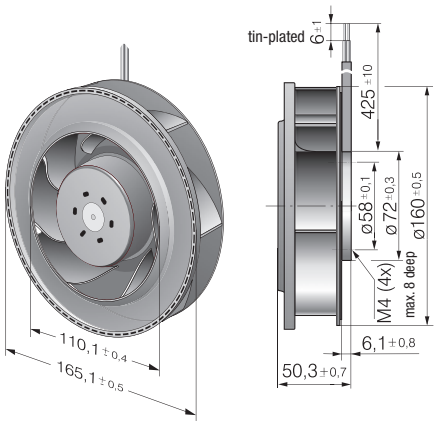

Inlet nozzles
from p. 248

ebmpapst

max. 370 m³/h

S-Force

DC centrifugal fans

Series RER 160 NTD Ø 165 x 51 mm

- **Material:** Impeller: GRP[1)]
- **Direction of air flow:** Axial: Intake
  Centrifugal: Exhaust
- **Direction of rotation:** Clockwise, seen on rotor
- **Connection:** Via single wires AWG 22, TR 64
- **Highlights:** 3-phase fan drive with very smooth running and high efficiency
  Backwards-curved impeller
- **Mass:** 590 g

- **Possible special versions:**
  (See chapter DC fans - specials)
  - Speed signal
  - Go / No-go alarm
  - Alarm with limit speed
  - External temperature sensor
  - Internal temperature sensor
  - PWM control input
  - Analogue control input
  - Protection against moisture
  - Type of protection: IP 54

1) Fibreglass-reinforced plastic

	Nominal data	Air flow	Air flow	Nominal voltage	Voltage range	Sound power level	Sintec sleeve bearings / Ball bearings	Input power	Nominal speed	Temperature range	Service life L_{10} (40 °C) ebm-papst Standard / Service life L_{10} (T_{max}) ebm-papst Standard*	Life expectancy L_{10IPC} (40 °C) see page 17	Curve
	Type	m³/h	CFM	VDC	VDC	Bel(A)	□/■	Watts	rpm	°C	Hours	Hours	
	RER 160-28/14 N/2 TDA	370	217	**24**	16...28	7,4	■	51	4 200	-20...+60	55 000 / 35 000	92 500	②
	RER 160-28/18 N/2 TDHHP*	305	298	**48**	36...60	8,5	■	142	6 000	-20...+65	40 000 / 22 500	67 500	③
min.	RER 160-28/18 NTD...	66	39	**48**	38...57	—	■	2,0	800	-20...+70	55 000 / 27 500	92 500	①
max.		354	98			7,4		43,0	4 200				②

Subject to alternations

Model RER 160-28/18 NTD... is available in customer-specific, custom-developed variant only.
The data specified here are technically feasible benchmark values. The fans can be specially adapted to your application with signal outputs and control inputs.
* The specific service life is valid when an external capacitor is wired between the plus and minus wires.
Please note the wiring suggestion.

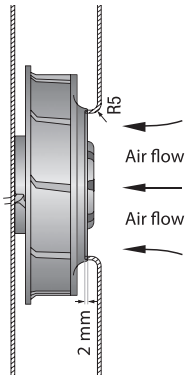

The air flow and noise level of the centrifugal fans without external housing depend on their individual installation conditions. The stated air flow and noise level were recorded under the following measurement parameters:
Centrifugal fan mounted on a foundation plate 260 x 260 mm.
Cover plate 260 x 260 mm, with an air inlet opening Ø 100 mm, arranged concentrically to the impeller.

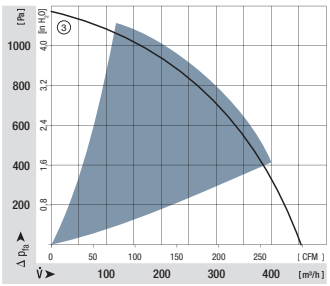

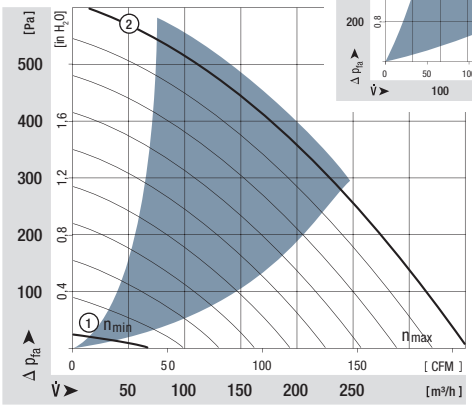

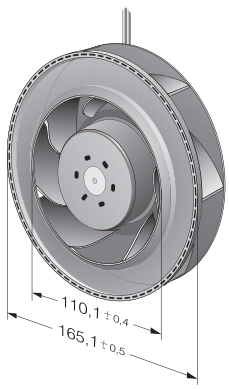

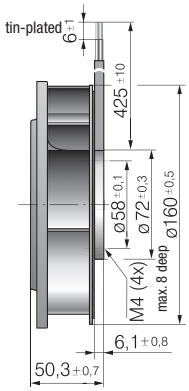

max. 800 m³/h

S-Force

DC centrifugal fans

Series REF 175 TD Ø 175 x 55 mm

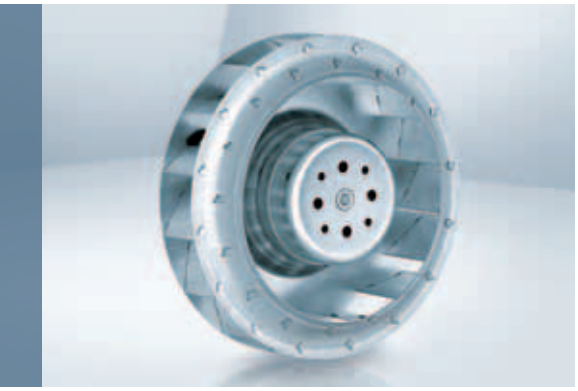

- **Material:** Impeller: Galvanised sheet steel
- **Direction of air flow:** Axial: Intake, Centrifugal: Exhaust
- **Direction of rotation:** Clockwise, seen on rotor
- **Connection:** Via single wires AWG 18, 20 or AWG 22, TR 64, speed signal and control input AWG 22
- **Highlights:** 3-phase fan drive with very smooth running and high efficiency
  Backwards-curved impeller
- **Mass:** 930 g

1) Fibreglass-reinforced plastic

- **Possible special versions:**
  (See chapter DC fans - specials)
  - Speed signal
  - Go / No-go alarm
  - Alarm with limit speed
  - External temperature sensor
  - Internal temperature sensor
  - PWM control input
  - Analogue control input
  - Multi-option control input
  - Protection against moisture
  - Type of protection: IP 54

Nominal data	Air flow	Air flow	Nominal voltage	Voltage range	Sound power level	Sintec sleeve bearings / Ball bearings	Input power	Nominal speed	Temperature range	Service life L_{10} (40 °C) ebm-papst Standard / Service life L_{10} (T_{max}) ebm-papst Standard	Life expectancy L_{10IPC} (40 °C) see page 17	Curve
Type	m³/h	CFM	VDC	VDC	Bel(A)	□/■	Watts	rpm	°C	Hours	Hours	
REF 175-30/18/2 TDP	800	470	**48**	36 ... 72	8,3	■	144	4 400	-20...+60	65 000 / 37 500	110 000	①
Subject to alternations	Speed control range from 800 rpm at 7 % PWM up to nominal speed at > 90 % PWM. Standstill at 0 % PWM, standstill if control cable is interrupted.											

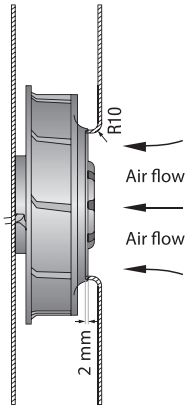

The air flow and noise level of the centrifugal fans without external housing depend on their individual installation conditions. The stated air flow and noise level were recorded under the following measurement parameters:
Centrifugal fan mounted on a foundation plate 180 x 180 mm.
Cover plate 180 x 180 mm, with an air inlet opening Ø 125,5 mm, arranged concentrically to the impeller.

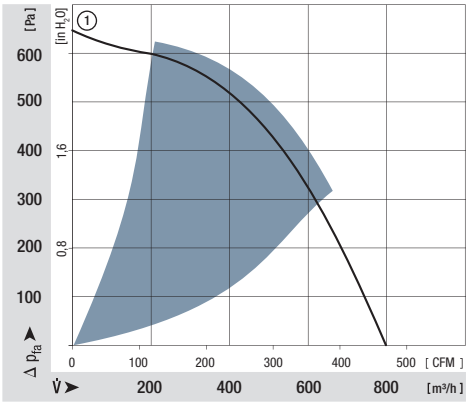

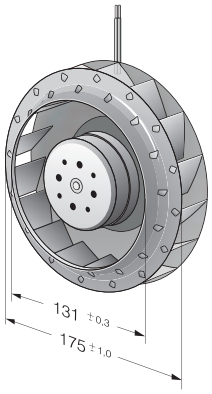

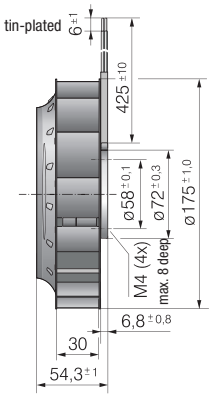

Inlet nozzles
from p. 248

ebmpapst

max. 980 m³/h

S-Force

DC centrifugal fans

Series RER 175 TD Ø 175 x 69 mm

- **Material:** Impeller: GRP[1)]
- **Direction of air flow:** Axial: Intake
  Centrifugal: Exhaust
- **Direction of rotation:** Clockwise, seen on rotor
- **Connection:** Via single wires AWG 18, 20 or AWG 22, TR 64, speed signal and control input AWG 22
- **Highlights:** 3-phase fan drive with very smooth running and high efficiency
  Backwards-curved impeller
- **Mass:** 775 g

1) Fibreglass-reinforced plastic

- **Possible special versions:**
  (See chapter DC fans - specials)
  - Speed signal
  - Go / No-go alarm
  - Alarm with limit speed
  - External temperature sensor
  - Internal temperature sensor
  - PWM control input
  - Analogue control input
  - Multi-option control input
  - Protection against moisture
  - Protection against salt fog
  - Type of protection: IP 54

Nominal data	Air flow	Air flow	Nominal voltage	Voltage range	Sound power level	Sintec sleeve bearings / Ball bearings	Input power	Nominal speed	Temperature range	Service life L_{10} (40 °C) ebm-papst Standard / Service life L_{10} (T_{max}) ebm-papst Standard	Life expectancy L_{10IPC} (40 °C) see page 17	Curve
Type	**m³/h**	**CFM**	**VDC**	**VDC**	**Bel(A)**	□/■	**Watts**	**rpm**	**°C**	**Hours**	**Hours**	
RER 175-42/14/2 TDMLP	600	353	**24**	16...30	7,3	■	48	3 400	-20...+65	72 500 / 40 000	122 500	①
RER 175-42/14/2 TDMP	865	509	**24**	16...36	8,2	■	110	4 800	-20...+65	70 000 / 40 000	117 500	②
RER 175-42/18/2 TDMLP	600	353	**48**	36...57	7,3	■	46	3 400	-20...+65	72 500 / 40 000	122 500	①
RER 175-42/18/2 TDMP*	865	509	**48**	36...72	8,2	■	110	4 800	-20...+65	70 000 / 40 000	117 500	②
RER 175-42/18/2 TDP	980	577	**48**	36...72	8,5	■	166	5 400	-20...+65	60 000 / 32 500	102 500	③

* vorläufig

Subject to alternations

Speed control range from 800 rpm at 7 % PWM up to nominal speed at > 90 % PWM. Standstill at 0 % PWM, standstill if control cable is interrupted.

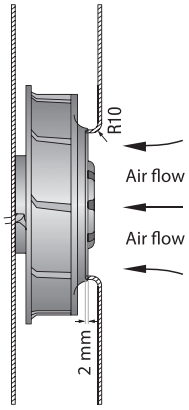

The air flow and noise level of the centrifugal fans without external housing depend on their individual installation conditions. The stated air flow and noise level were recorded under the following measurement parameters:
Centrifugal fan mounted on a foundation plate 180 x 180 mm.
Cover plate 180 x 180 mm, with an air inlet opening Ø 125,5 mm, arranged concentrically to the impeller.

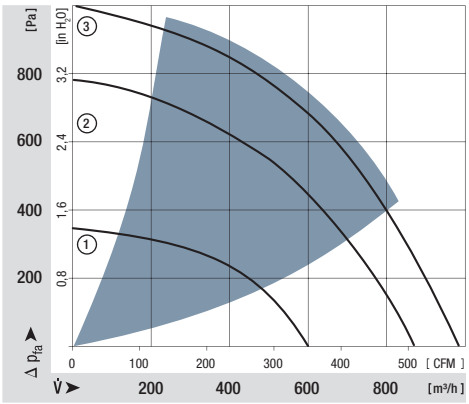

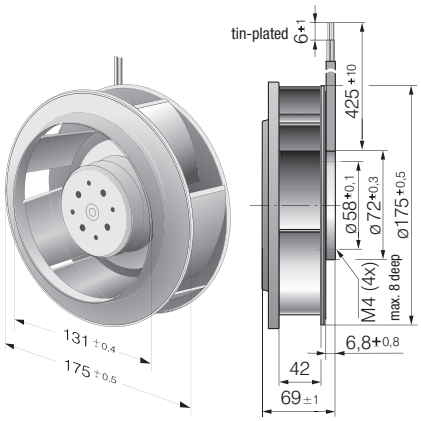

max. 970 m³/h

S-Force

DC centrifugal fans

Series RER 190 TD Ø 190 x 69 mm

- **Material:** Impeller: GRP[1)]
- **Direction of air flow:** Axial: Intake, Centrifugal: Exhaust
- **Direction of rotation:** Clockwise, seen on rotor
- **Connection:** Via single wires AWG 18, 20 or AWG 22, TR 64, speed signal and control input AWG 22
- **Highlights:** 3-phase fan drive with very smooth running and high efficiency
  Backwards-curved RadiCal impeller
- **Mass:** 870 g

1) Fibreglass-reinforced plastic

- **Possible special versions:**
  (See chapter DC fans - specials)
  - Speed signal
  - Go / No-go alarm
  - Alarm with limit speed
  - External temperature sensor
  - Internal temperature sensor
  - PWM control input
  - Analogue control input
  - Multi-option control input
  - Protection against moisture
  - Protection against salt fog
  - Type of protection: IP 54

Nominal data	Air flow	Air flow	Nominal voltage	Voltage range	Sound power level	Sintec sleeve bearings / Ball bearings	Input power	Nominal speed	Temperature range	Service life L_{10} (40 °C) ebm-papst Standard / Service life L_{10} (T_{max}) ebm-papst Standard	Life expectancy L_{10IPC} (40 °C) see page 17	Curve
Type	**m³/h**	**CFM**	**VDC**	**VDC**	**Bel(A)**	□ / ■	**Watts**	**rpm**	**°C**	**Hours**	**Hours**	
RER 190-39/14/2 TDML0	650	382	**24**	16...30	7,6	■	58	3 000	-20...+60	55 000 / 35 000	92 500	①
RER 190-39/14/2 TDM0	860	506	**24**	16...36	7,9	■	110	3 900	-20...+65	52 500 / 30 000	87 500	②
RER 190-39/18/2 TDML0*	650	382	**48**	36...57	7,6	■	56	3 000	-20...+65	55 000 / 30 000	92 500	①
RER 190-39/18/2 TDM0*	860	506	**48**	36...72	7,9	■	105	3 900	-20...+65	52 500 / 30 000	87 500	②
RER 190-39/18/2 TD0	970	571	**48**	36...72	8,3	■	148	4 400	-20...+65	40 000 / 22 500	67 500	③

* Auf Anfrage

Subject to alternations

Speed control range from 800 rpm at 7 % PWM up to nominal speed at > 90 % PWM. Standstill at 0 % PWM, standstill if control cable is interrupted.

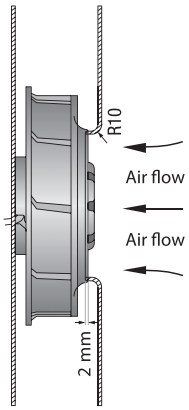

The air flow and noise level of the centrifugal fans without external housing depend on their individual installation conditions. The stated air flow and noise level were recorded under the following measurement parameters:
Centrifugal fan mounted on a foundation plate 195 x 195 mm.
Cover plate 195 x 195 mm, with an air inlet opening Ø 125,5 mm, arranged concentrically to the impeller.

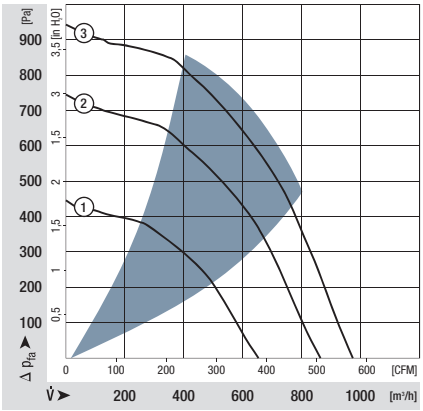

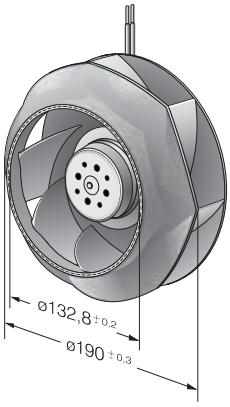

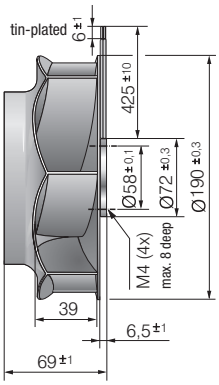

Inlet nozzles
from p. 248

ebmpapst

max. 930 m³/h

DC centrifugal fans – RadiCal

Ø 190 mm

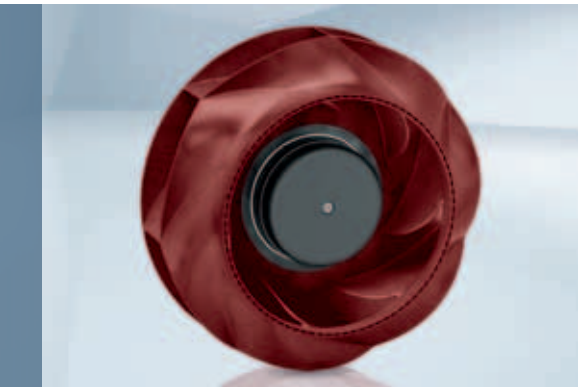

- **Material:** Impeller: Plastic PA
  Rotor: Coated in black
- **Number of blades:** 7
- **Direction of rotation:** Clockwise, seen on rotor
- **Type of protection:** IP 44, depending on installation and position
- **Insulation class:** "B"
- **Mounting position:** Any
- **Condensate discharges:** None
- **Operation mode:** Continuous operation (S1)
- **Bearings:** Maintenance-free ball bearings

Nominal data		Curve	Nominal voltage	Voltage range	Air flow	Speed / rpm	Input power	Current draw	Sound power level	Perm. amb. temp.	Technical features and electrical connections
Type	**Motor**		**VDC**	**VDC**	**m³/h**	**rpm**	**W**	**A**	**dB(A)**	**°C**	
R3G 190	M3G 074-CF	A	24	16-28	880	4570	180	7,50	76	-25..+60	p. 258 / J5)
R3G 190	M3G 074-CF	B	48	36-57	930	4800	192	4,00	76	-25..+60	p. 258 / J5)

Subject to alternations

Curve:

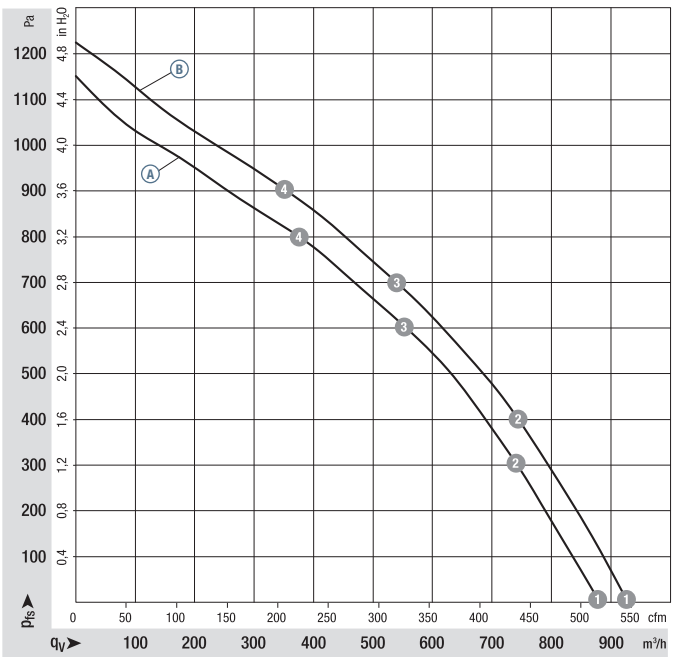

		n rpm	P_{ed} W	I A	L_WA dB(A)
A	1	4570	180	7,50	84
A	2	4525	188	7,83	79
A	3	4435	199	8,34	77
A	4	4520	191	7,96	81
B	1	4800	192	4,00	84
B	2	4690	212	4,41	80
B	3	4640	221	4,60	79
B	4	4740	205	4,28	81

Air performance measured as per: ISO 5801, Installation category A, with ebm-papst inlet nozzle without protection against accidental contact. Suction-side noise levels: LWA as per ISO 13347, LpA measured at 1 m distance to fan axis. The acoustic values given are only valid under the measurment conditions listed and may vary depending on the installation situation. With any deviation to the standard setup, the specific values have to be checked and reviewed once installed or fitted!
For detailed information see http://www.ebmpapst.com/general conditions

ebmpapst

- **Technical features:** See electrical connections p. 258
- **Cable exit:** Variabel
- **Product conforming to standards:** EN 60950-1
- **Approvals:** GOST

Mass centrifugal fans

Centrifugal fans	kg	Inlet nozzle
R3G 190-RN38 -01	1,9	09576-2-4013
R3G 190-RN99 -02	1,9	09576-2-4013

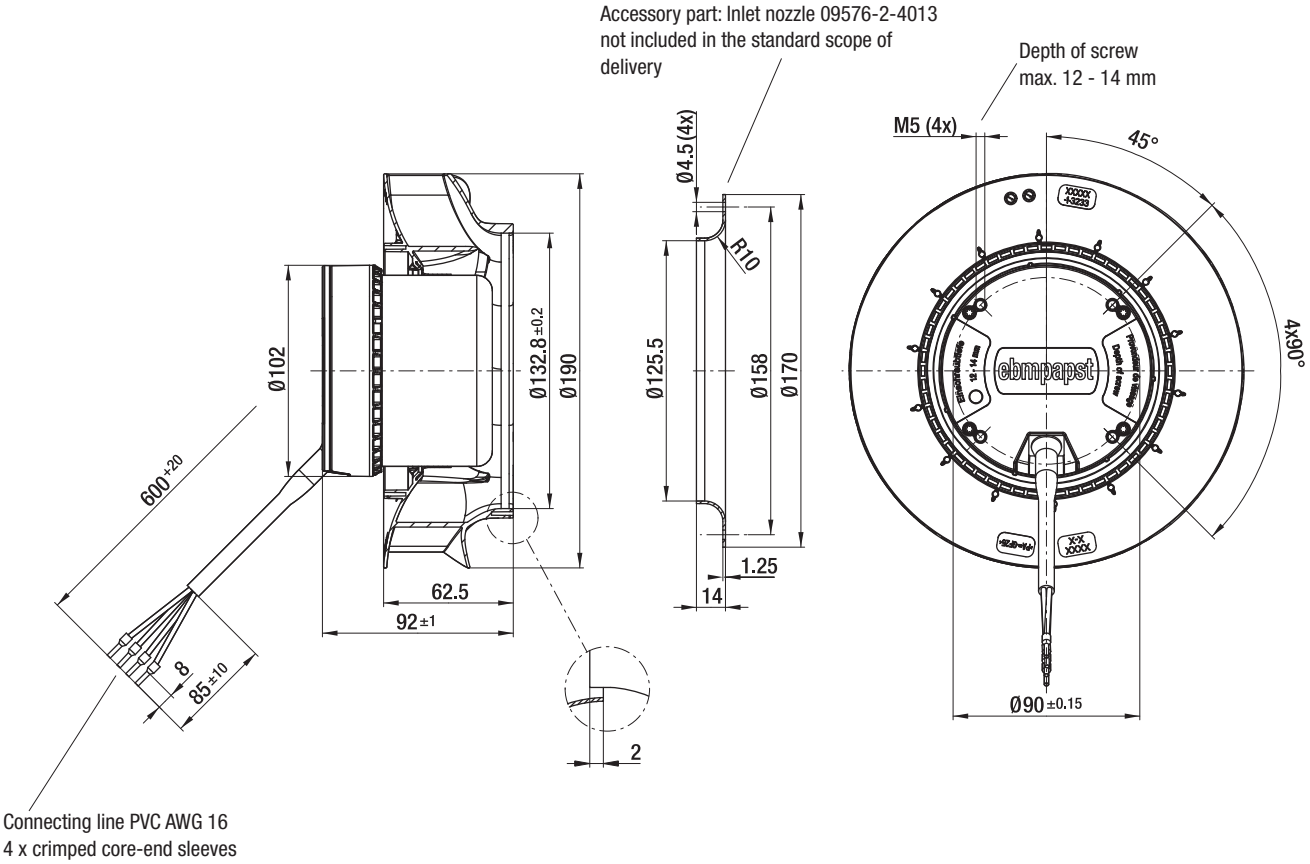

max. 1210 m³/h

DC centrifugal fans – RadiCal

Ø 220 mm

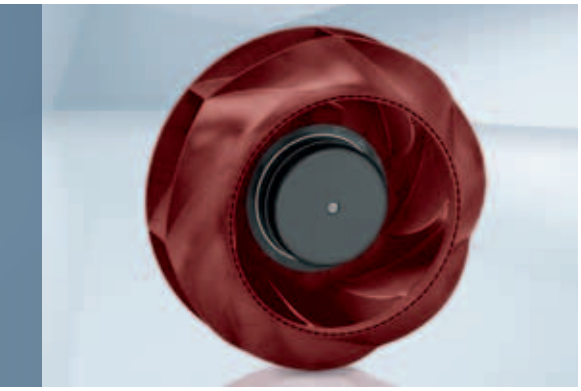

- **Material:** Impeller: Plastic PA
  Rotor: Coated in black
- **Number of blades:** 7
- **Direction of rotation:** Clockwise, seen on rotor
- **Type of protection:** IP 44, depending on installation and position
- **Insulation class:** "B"
- **Mounting position:** Any
- **Condensate discharges:** None
- **Operation mode:** Continuous operation (S1)
- **Bearings:** Maintenance-free ball bearings

Nominal data		Curve	Nominal voltage	Voltage range	Air flow	Speed / rpm	Input power	Current draw	Sound power level	Perm. amb. temp.	Technical features and electrical connections
Type	**Motor**		**VDC**	**VDC**	**m³/h**	**rpm**	**W**	**A**	**dB(A)**	**°C**	
R3G 220	M3G 074-CF	A	24	16-28	1185	3480	162	6,75	73	-25...+60	p. 258 / J5)
R3G 220	M3G 074-CF	B	48	36-57	1210	3510	160	3,40	73	-25...+60	p. 258 / J5)

Subject to alternations

Curve:

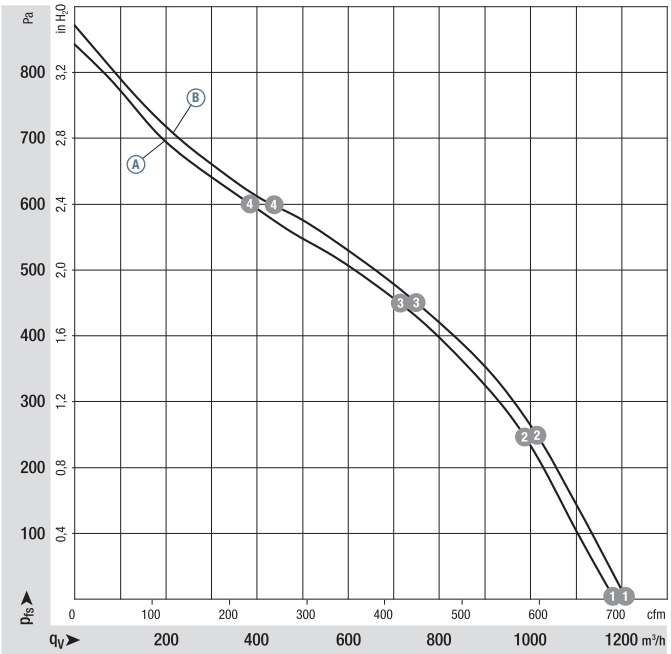

		n rpm	P_{ed} W	I A	L_WA dB(A)
A	1	3480	162	6,75	81
A	2	3420	171	7,11	77
A	3	3360	182	7,59	74
A	4	3455	168	6,97	79
B	1	3510	160	3,40	81
B	2	3450	168	3,50	77
B	3	3385	178	3,71	74
B	4	3460	167	3,47	79

Air performance measured as per: ISO 5801, Installation category A, with ebm-papst inlet nozzle without protection against accidental contact. Suction-side noise levels: LWA as per ISO 13347, LpA measured at 1 m distance to fan axis. The acoustic values given are only valid under the measurment conditions listed and may vary depending on the installation situation. With any deviation to the standard setup, the specific values have to be checked and reviewed once installed or fitted!
For detailed information see http://www.ebmpapst.com/general conditions

ebmpapst

- **Technical features:** See electrical connections p. 258
- **Cable exit:** Variabel
- **Product conforming to standards:** EN 60950-1
- **Approvals:** GOST

Mass centrifugal fans

Centrifugal fans	kg	Inlet nozzle
R3G 220-RN12 -01	1,9	09609-2-4013
R3G 220-RNB6 -02	1,9	09609-2-4013

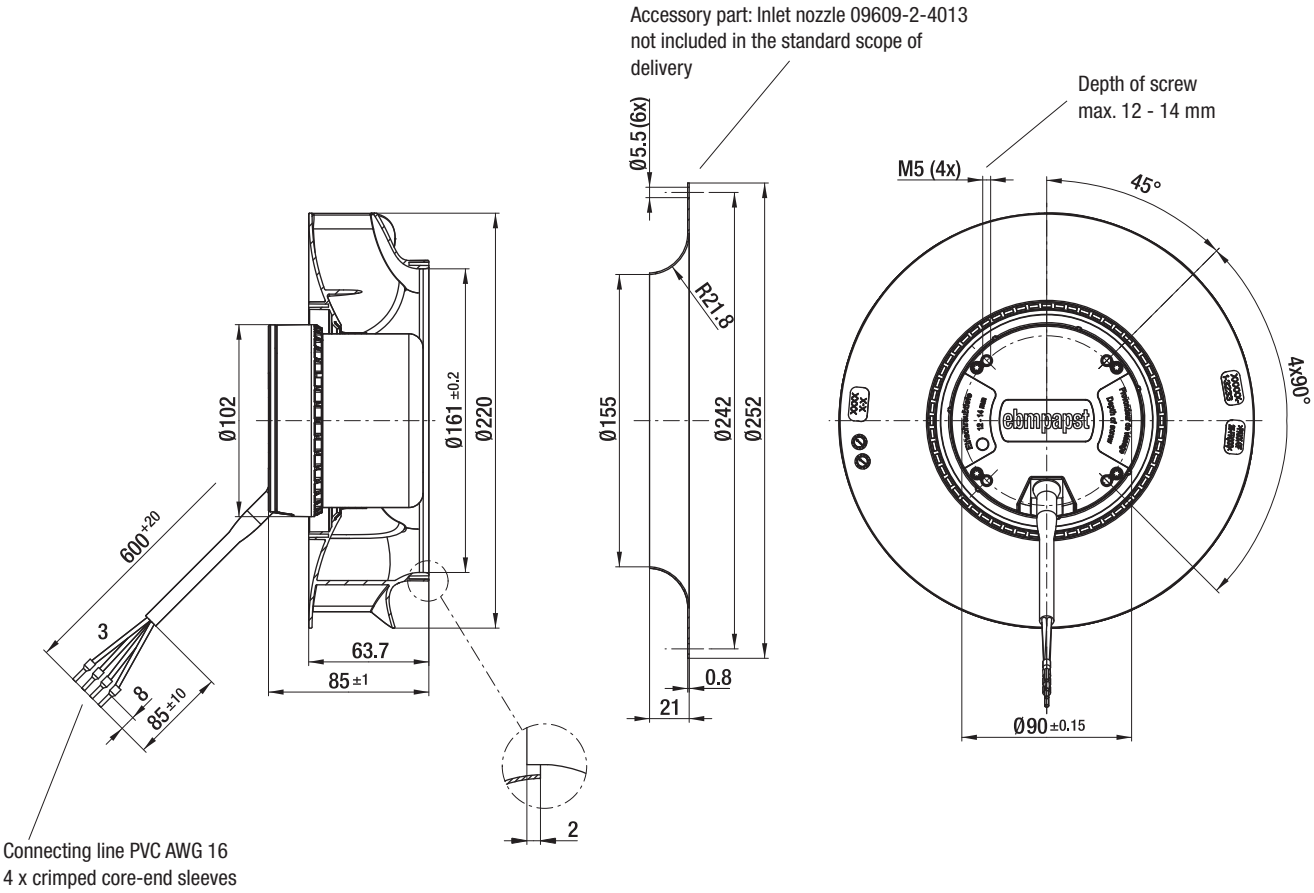

max. 1280 m³/h

S-Force

DC centrifugal fans

Series RER 220 TD Ø 221 x 71 mm

- **Material:** Impeller: GRP[1)]
- **Direction of air flow:** Axial: Intake
  Centrifugal: Exhaust
- **Direction of rotation:** Clockwise, seen on rotor
- **Connection:** Via single wires AWG 18, 20 or AWG 22, TR 64, speed signal and control input AWG 22
- **Highlights:** 3-phase fan drive with very smooth running and high efficiency
  Backwards-curved impeller
- **Mass:** 940 g

1) Fibreglass-reinforced plastic

- **Possible special versions:**
  (See chapter DC fans - specials)
  - Speed signal
  - Go / No-go alarm
  - Alarm with limit speed
  - External temperature sensor
  - Internal temperature sensor
  - PWM control input
  - Analogue control input
  - Multi-option control input
  - Protection against moisture
  - Protection against salt fog
  - Type of protection: IP 54

Nominal data	Air flow	Air flow	Nominal voltage	Voltage range	Sound power level	Sintec sleeve bearings / Ball bearings	Input power	Nominal speed	Temperature range	Service life L_{10} (40 °C) ebm-papst Standard / Service life L_{10} (T_{max}) ebm-papst Standard	Life expectancy L_{10IPC} (40 °C) see page 17	Curve
Type	**m³/h**	**CFM**	**VDC**	**VDC**	**Bel(A)**	□/■	**Watts**	**rpm**	**°C**	**Hours**	**Hours**	
RER 220-44/14/2 TDM0*	1090	641	**24**	16...36	7,7	■	82	3 000	-20...+55	75 000 / 52 500	127 500	①
RER 220-44/18/2 TDM0*	1090	641	**48**	36...72	7,7	■	80	3 000	-20...+55	75 000 / 52 500	127 500	①
RER 220-44/18/2 TDP	1280	753	**48**	36...72	8,0	■	140	3 500	-20...+55	55 000 / 40 000	92 500	②

* upon request

Subject to alternations

Speed control range from 800 rpm at 7 % PWM up to nominal speed at > 90 % PWM. Standstill at 0 % PWM, standstill if control cable is interrupted.

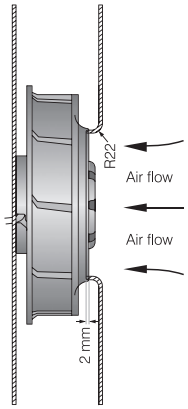

The air flow and noise level of the centrifugal fans without external housing depend on their individual installation conditions. The stated air flow and noise level were recorded under the following measurement parameters:
Centrifugal fan mounted on a foundation plate 230 x 230 mm.
Cover plate 230 x 230 mm, with an air inlet opening Ø 155 mm, arranged concentrically to the impeller.

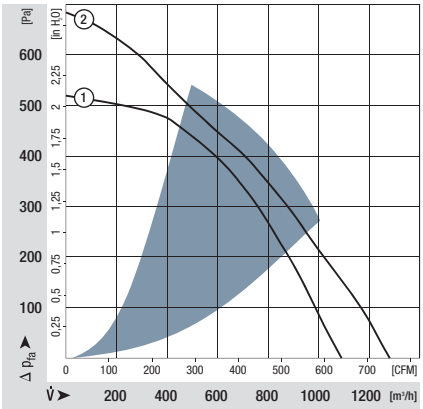

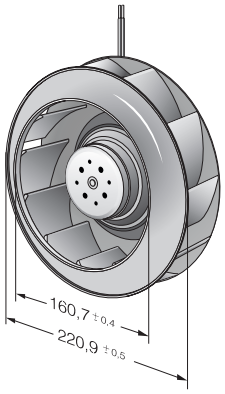

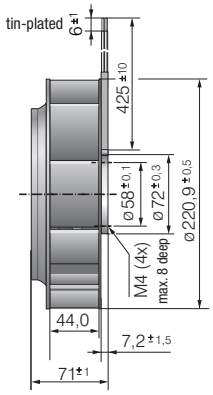

Inlet nozzles
from p. 248

ebmpapst

max. 1600 m³/h

S-Force

DC centrifugal fans

Series RER 225 TD Ø 225 x 99 mm

- **Material:** Impeller: GRP[1)]
- **Direction of air flow:** Axial: Intake
  Centrifugal: Exhaust
- **Direction of rotation:** Clockwise, seen on rotor
- **Connection:** Via single wires AWG 18, 20 or AWG 22, TR 64, speed signal and control input AWG 22
- **Highlights:** 3-phase fan drive with very smooth running and high efficiency
  Backwards-curved impeller
- **Mass:** 1030 g

1) Fibreglass-reinforced plastic

- **Possible special versions:**
  (See chapter DC fans - specials)
  - Speed signal
  - Go / No-go alarm
  - Alarm with limit speed
  - External temperature sensor
  - Internal temperature sensor
  - PWM control input
  - Analogue control input
  - Multi-option control input
  - Protection against moisture
  - Protection against salt fog
  - Type of protection: IP 54

	Nominal data	Air flow	Air flow	Nominal voltage	Voltage range	Sound power level	Sintec sleeve bearings / Ball bearings	Input power	Nominal speed	Temperature range	Service life L_{10} (40 °C) ebm-papst Standard / Service life L_{10} (T_{max}) ebm-papst Standard	Life expectancy L_{10IPC} (40 °C) see page 17	Curve
	Type	**m³/h**	**CFM**	**VDC**	**VDC**	**Bel(A)**	□/■	**Watts**	**rpm**	**°C**	**Hours**	**Hours**	
NEW	RER 225-63/18/2 TDMLO	1190	700	**48**	36...72	7,2	■	77	2 500	-20...+55	70 000 / 50 000	122 500	①
NEW	RER 225-63/18/2 TDMO	1340	789	**48**	36...72	7,8	■	108	2 800	-20...+55	55 000 / 40 000	92 500	②
NEW	RER 225-63/18/2 TDO	1600	941	**48**	36...72	8,1	■	163	3 300	-20...+55	52 500 / 37 500	87 500	③

Subject to alternations

Speed control range from 800 rpm at 7 % PWM up to nominal speed at > 90 % PWM. Standstill at 0 % PWM, standstill if control cable is interrupted.

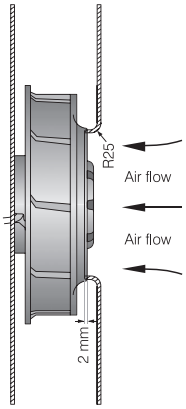

The air flow and noise level of the centrifugal fans without external housing depend on their individual installation conditions. The stated air flow and noise level were recorded under the following measurement parameters:
Centrifugal fan mounted on a foundation plate 230 x 230 mm.
Cover plate 230 x 230 mm, with an air inlet opening Ø 146 mm, arranged concentrically to the impeller.

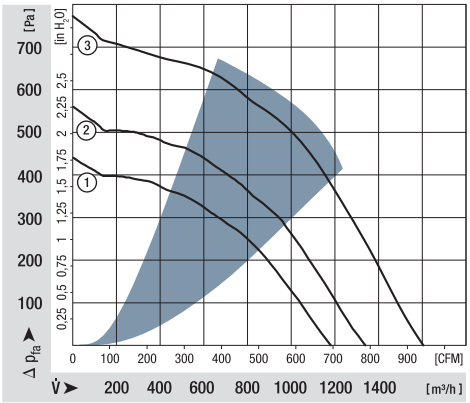

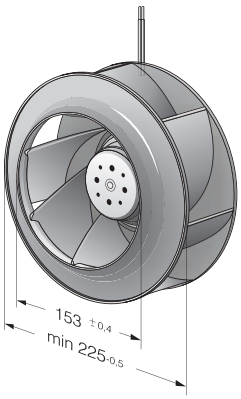

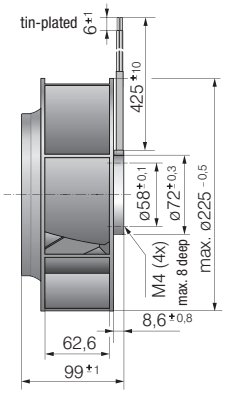

max. 1400 m³/h

DC centrifugal fans – RadiCal

Ø 225 mm

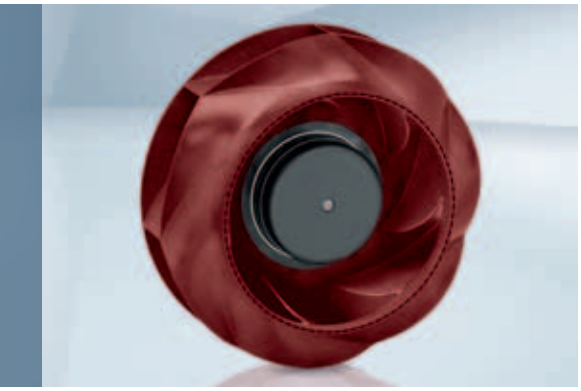

- **Material:** Impeller: Plastic PA
  Rotor: Coated in black
- **Number of blades:** 7
- **Direction of rotation:** Clockwise, seen on rotor
- **Type of protection:** IP 44, depending on installation and position
- **Insulation class:** "B"
- **Mounting position:** Any
- **Condensate discharges:** None
- **Operation mode:** Continuous operation (S1)
- **Bearings:** Maintenance-free ball bearings

Nominal data		Curve	Nominal voltage	Voltage range	Air flow	Speed / rpm	Input power	Current draw	Sound power level	Perm. amb. temp.	Technical features and electrical connections
Type	**Motor**		**VDC**	**VDC**	**m³/h**	**rpm**	**W**	**A**	**dB(A)**	**°C**	
R3G 225	M3G 074-CF	A	24	16-28	1275	3240	200	8,30	75	-25...+60	p. 258 / J5)
R3G 225	M3G 074-CF	B	48	36-57	1400	3500	245	5,00	73	-25...+60	p. 258 / J5)

Subject to alternations

Curve:

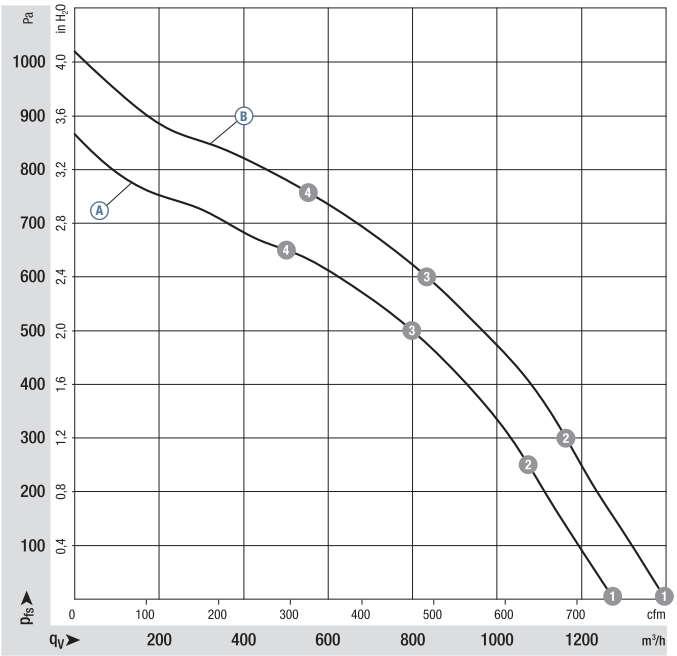

		n rpm	P_{ed} W	I A	L_WA dB(A)
A	1	3240	200	8,30	81
A	2	3200	208	8,66	78
A	3	3185	213	8,88	74
A	4	3260	194	8,02	77
B	1	3500	245	5,00	83
B	2	3440	257	5,35	80
B	3	3435	260	5,43	76
B	4	3500	239	4,97	78

Air performance measured as per: ISO 5801, Installation category A, with ebm-papst inlet nozzle without protection against accidental contact. Suction-side noise levels: LWA as per ISO 13347, LpA measured at 1 m distance to fan axis. The acoustic values given are only valid under the measurment conditions listed and may vary depending on the installation situation. With any deviation to the standard setup, the specific values have to be checked and reviewed once installed or fitted!
For detailed information see http://www.ebmpapst.com/general conditions

ebmpapst

- **Technical features:** See electrical connections p. 258
- **Cable exit:** Variabel
- **Product conforming to standards:** EN 60950-1
- **Approvals:** GOST

Mass centrifugal fans

Centrifugal fans	kg	Inlet nozzle
R3G 225-RN28 -01	2,1	96358-2-4013
R3G 225-RN18 -02	2,1	96358-2-4013

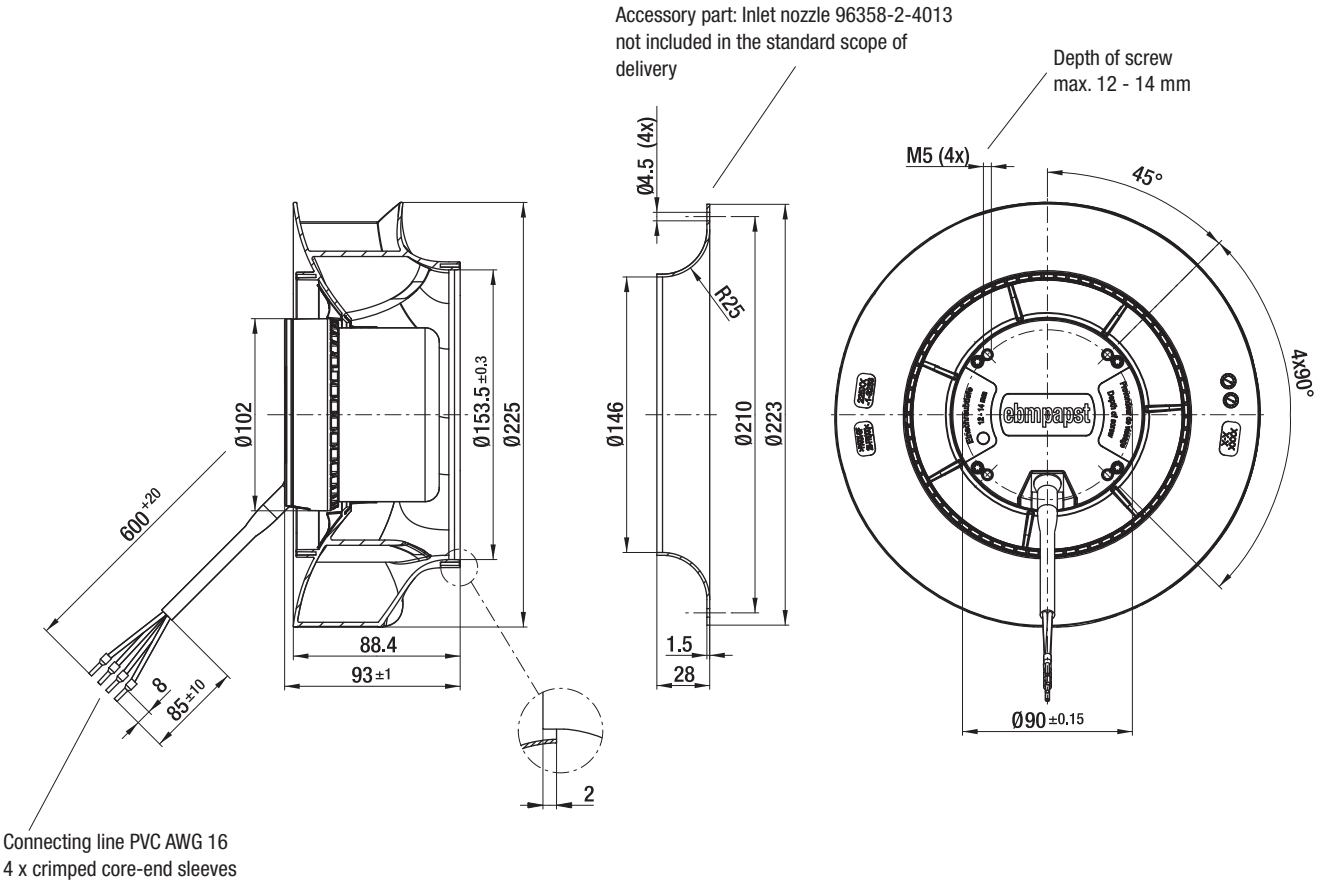

max. 1650 m³/h

DC centrifugal fans – RadiCal

Ø 250 mm

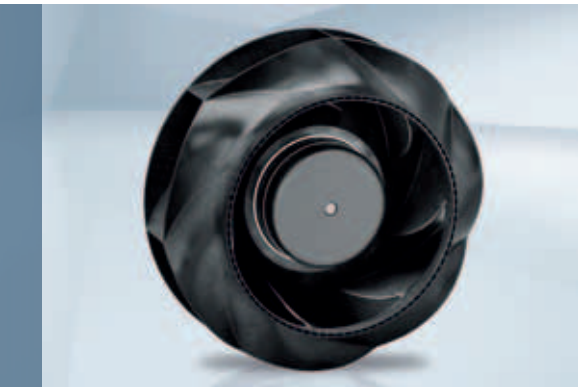

- **Material:** Impeller: Plastic PA
  Rotor: Coated in black
- **Number of blades:** 7
- **Direction of rotation:** Clockwise, seen on rotor
- **Type of protection:** IP 44, depending on installation and position
- **Insulation class:** "B"
- **Mounting position:** Any
- **Condensate discharges:** None
- **Operation mode:** Continuous operation (S1)
- **Bearings:** Maintenance-free ball bearings

Nominal data		Curve	Nominal voltage	Voltage range	Air flow	Speed / rpm	Input power	Current draw	Sound power level	Perm. amb. temp.	Technical features and electrical connections
Type	**Motor**		**VDC**	**VDC**	**m³/h**	**rpm**	**W**	**A**	**dB(A)**	**°C**	
R3G 250	M3G 074-CF	A	24	16-28	1650	3140	236	9,80	73	-25...+60	p. 258 / J5)
R3G 250	M3G 074-CF	B	48	36-57	1640	3125	230	4,75	73	-25...+60	p. 258 / J5)

Subject to alternations

Curve:

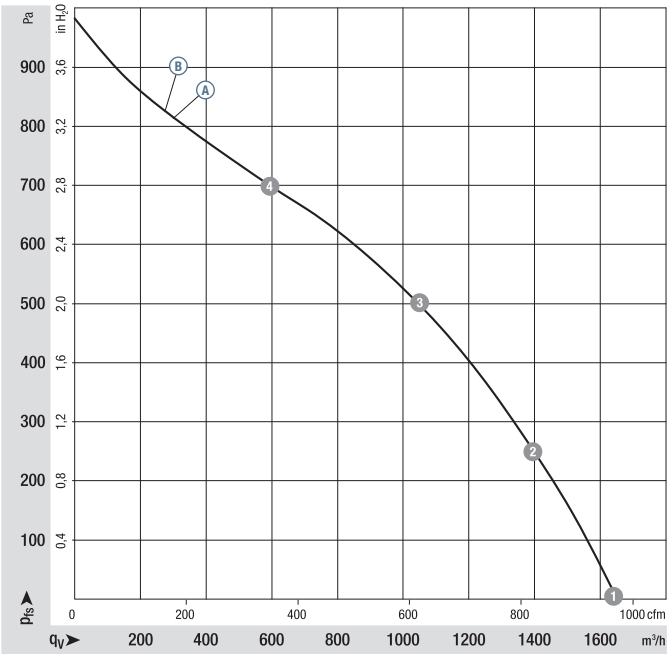

		n rpm	P_{ed} W	I A	L_WA dB(A)
A	1	3140	236	9,80	81
A	2	3075	260	10,80	77
A	3	3035	276	11,45	75
A	4	3095	256	10,66	75
B	1	3125	230	4,75	81
B	2	3065	249	5,20	77
B	3	3025	266	5,55	75
B	4	3090	244	5,09	78

Air performance measured as per: ISO 5801, Installation category A, with ebm-papst inlet nozzle without protection against accidental contact. Suction-side noise levels: LWA as per ISO 13347, LpA measured at 1 m distance to fan axis. The acoustic values given are only valid under the measurment conditions listed and may vary depending on the installation situation. With any deviation to the standard setup, the specific values have to be checked and reviewed once installed or fitted!
For detailed information see http://www.ebmpapst.com/general conditions

ebmpapst

- **Technical features:** See electrical connections p. 258
- **Cable exit:** Variabel
- **Product conforming to standards:** EN 60950-1
- **Approvals:** GOST

Mass centrifugal fans

Centrifugal fans	kg	Inlet nozzle
R3G 250-RN46 -01	2,1	96359-2-4013
R3G 250-RNB5 -02	2,1	96359-2-4013

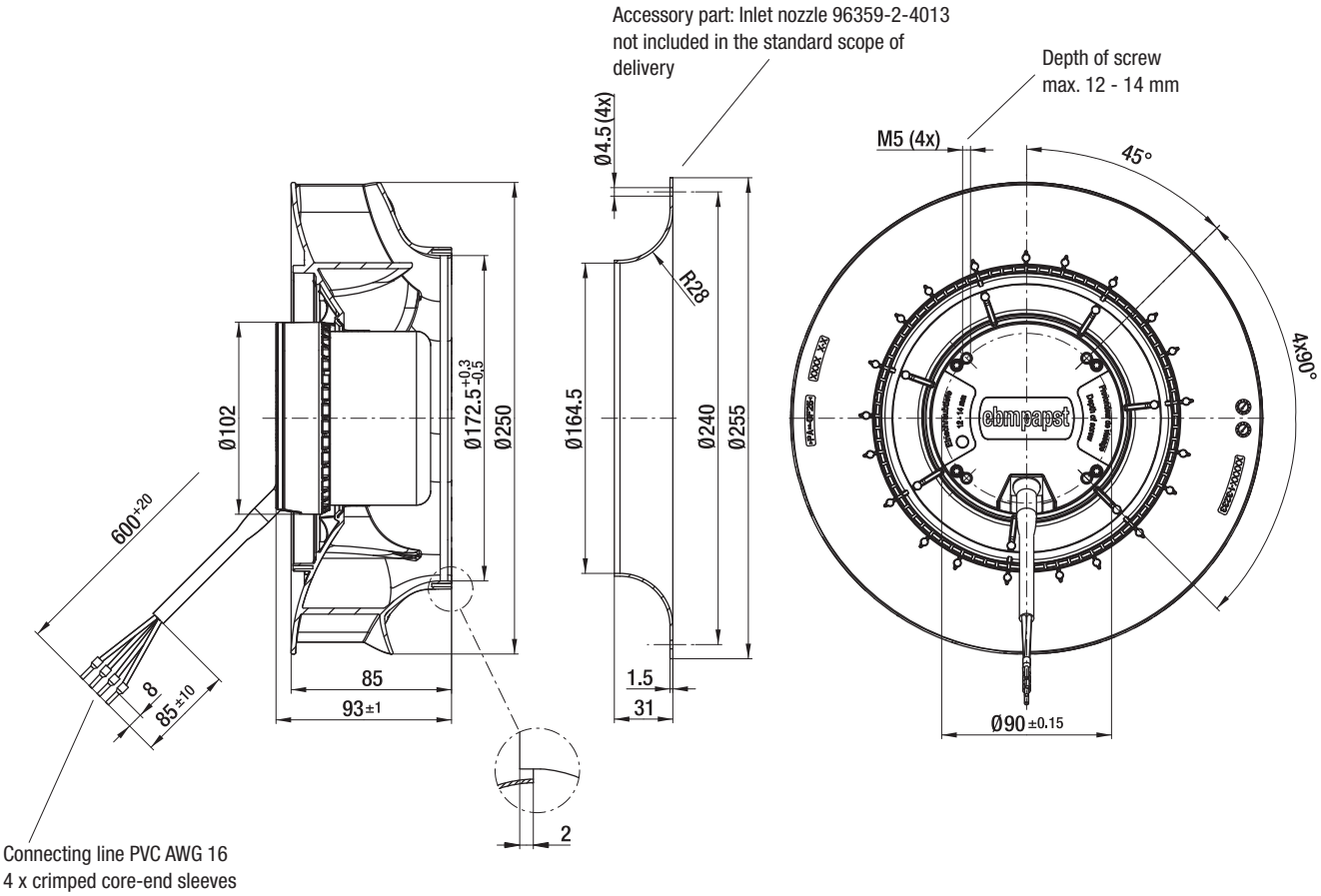

max. 2210 m³/h

DC centrifugal fans – RadiCal

Ø 280 mm

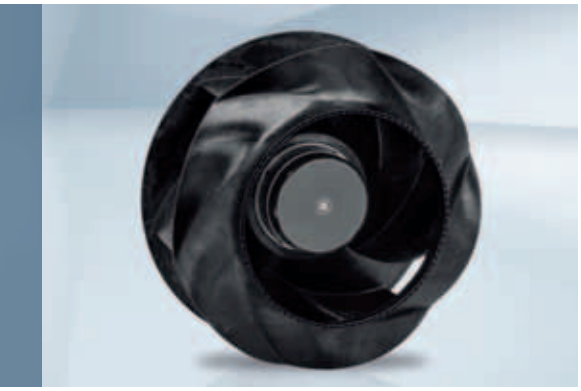

- **Material:** Impeller: Plastic PP
  Rotor: Coated in black
- **Number of blades:** 6
- **Direction of rotation:** Clockwise, seen on rotor
- **Type of protection:** IP 44, depending on installation and position
- **Insulation class:** "B"
- **Mounting position:** Any
- **Condensate discharges:** None
- **Operation mode:** Continuous operation (S1)
- **Bearings:** Maintenance-free ball bearings

Nominal data		Curve	Nominal voltage	Voltage range	Air flow	Speed / rpm	Input power	Current draw	Sound power level	Perm. amb. temp.	Technical features and electrical connections
Type	**Motor**		**VDC**	**VDC**	**m³/h**	**rpm**	**W**	**A**	**dB(A)**	**°C**	
R3G 280	M3G 074-CF	A	24	16-28	2210	1930	148	6,10	67	-25...+60	p. 258 / J5)
R3G 280	M3G 074-CF	B	48	36-57	2175	1910	140	2,90	67	-25...+60	p. 258 / J5)

Subject to alternations

Curve:

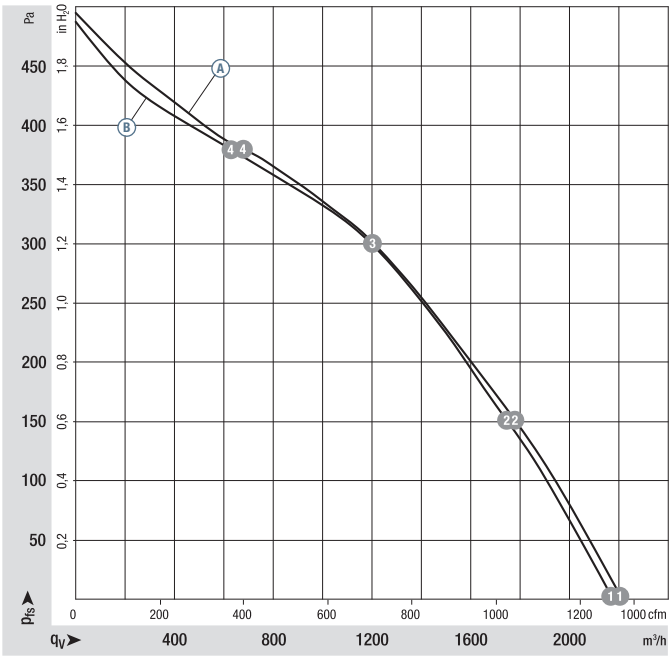

		n rpm	P_{ed} W	I A	L_WA dB(A)
A	1	1930	148	6,10	74
A	2	1870	162	6,76	67
A	3	1840	173	7,21	64
A	4	1905	153	6,36	68
B	1	1910	140	2,90	74
B	2	1845	158	3,30	67
B	3	1830	163	3,40	64
B	4	1900	141	2,93	68

Air performance measured as per: ISO 5801, Installation category A, with ebm-papst inlet nozzle without protection against accidental contact. Suction-side noise levels: LWA as per ISO 13347, LpA measured at 1 m distance to fan axis. The acoustic values given are only valid under the measurment conditions listed and may vary depending on the installation situation. With any deviation to the standard setup, the specific values have to be checked and reviewed once installed or fitted!
For detailed information see http://www.ebmpapst.com/general conditions

ebmpapst

- **Technical features:** See electrical connections p. 258
- **Cable exit:** Variabel
- **Product conforming to standards:** EN 60950-1
- **Approvals:** GOST

Mass centrifugal fans

Centrifugal fans	kg	Inlet nozzle
R3G 280-RN30 -01	2,4	28000-2-4013
R3G 280-RNB1 -02	2,4	28000-2-4013

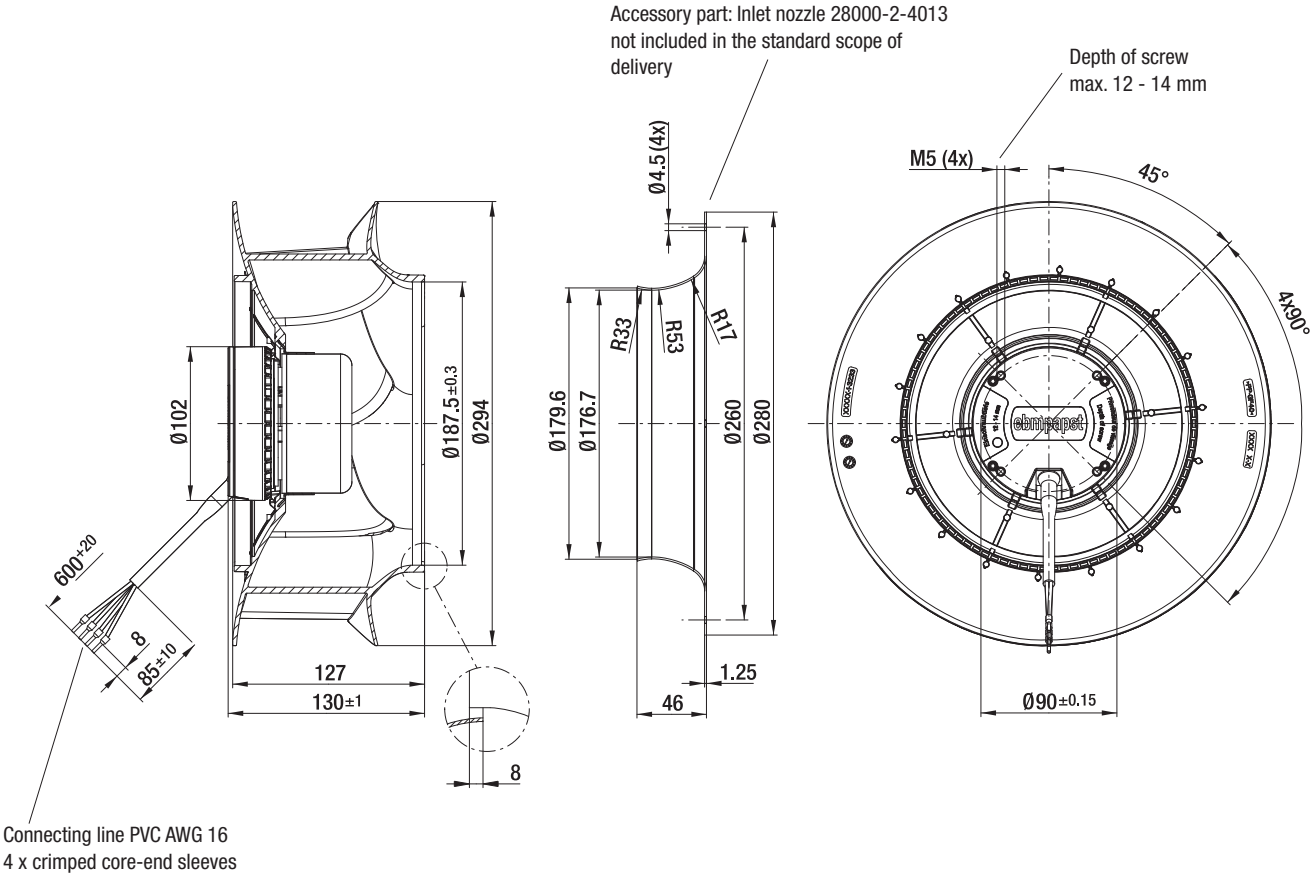

max. 2420 m³/h

DC centrifugal fans – RadiCal

Ø 310 mm

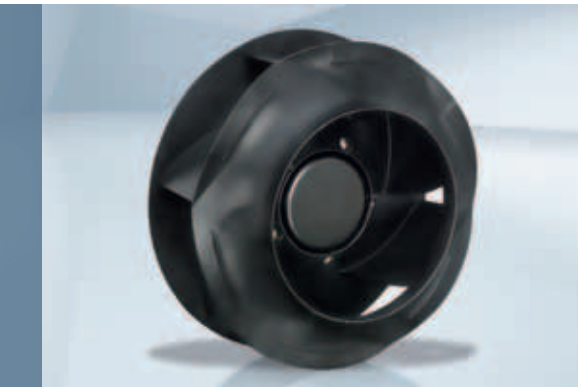

- **Material:** Impeller: Plastic PP
  Rotor: Coated in black
- **Number of blades:** 6
- **Direction of rotation:** Clockwise, seen on rotor
- **Type of protection:** IP 44, depending on installation and position
- **Insulation class:** "B"
- **Mounting position:** Any
- **Condensate discharges:** None
- **Operation mode:** Continuous operation (S1)
- **Bearings:** Maintenance-free ball bearings

Nominal data		Curve	Nominal voltage	Voltage range	Air flow	Speed / rpm	Input power	Current draw	Sound power level	Perm. amb. temp.	Technical features and electrical connections
Type	**Motor**		**VDC**	**VDC**	**m³/h**	**RPM**	**W**	**A**	**dB(A)**	**°C**	
R3G 310	M3G 074-CF	A	24	16-28	2380	1625	122	5,00	64	-25...+60	p. 258 / J5)
R3G 310	M3G 074-CF	B	48	36-57	2420	1650	123	2,60	64	-25...+60	p. 258 / J5)

Subject to alternations

Curve:

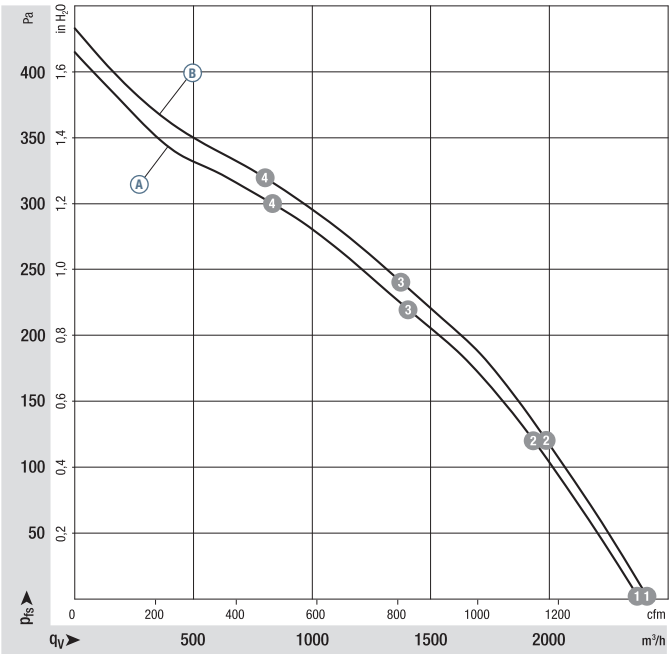

		n rpm	P_{ed} W	I A	L_WA dB(A)
A	1	1625	122	5,00	70
A	2	1540	145	6,03	67
A	3	1520	152	6,34	63
A	4	1550	143	5,95	65
B	1	1650	123	2,60	70
B	2	1570	147	3,07	66
B	3	1545	156	3,26	63
B	4	1580	144	3,01	66

Air performance measured as per: ISO 5801, Installation category A, with ebm-papst inlet nozzle without protection against accidental contact. Suction-side noise levels: LWA as per ISO 13347, LpA measured at 1 m distance to fan axis. The acoustic values given are only valid under the measurment conditions listed and may vary depending on the installation situation. With any deviation to the standard setup, the specific values have to be checked and reviewed once installed or fitted!
For detailed information see http://www.ebmpapst.com/general conditions

ebmpapst

- **Technical features:** See electrical connections p. 258
- **Cable exit:** Variabel
- **Product conforming to standards:** EN 60950-1
- **Approvals:** GOST

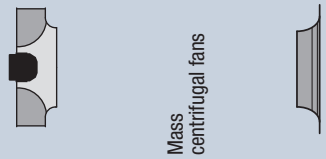

Centrifugal fans	Mass centrifugal fans kg	Inlet nozzle
R3G 310-RN99 -01	2,8	31000-2-4013
R3G 310-RN98 -02	2,8	31000-2-4013

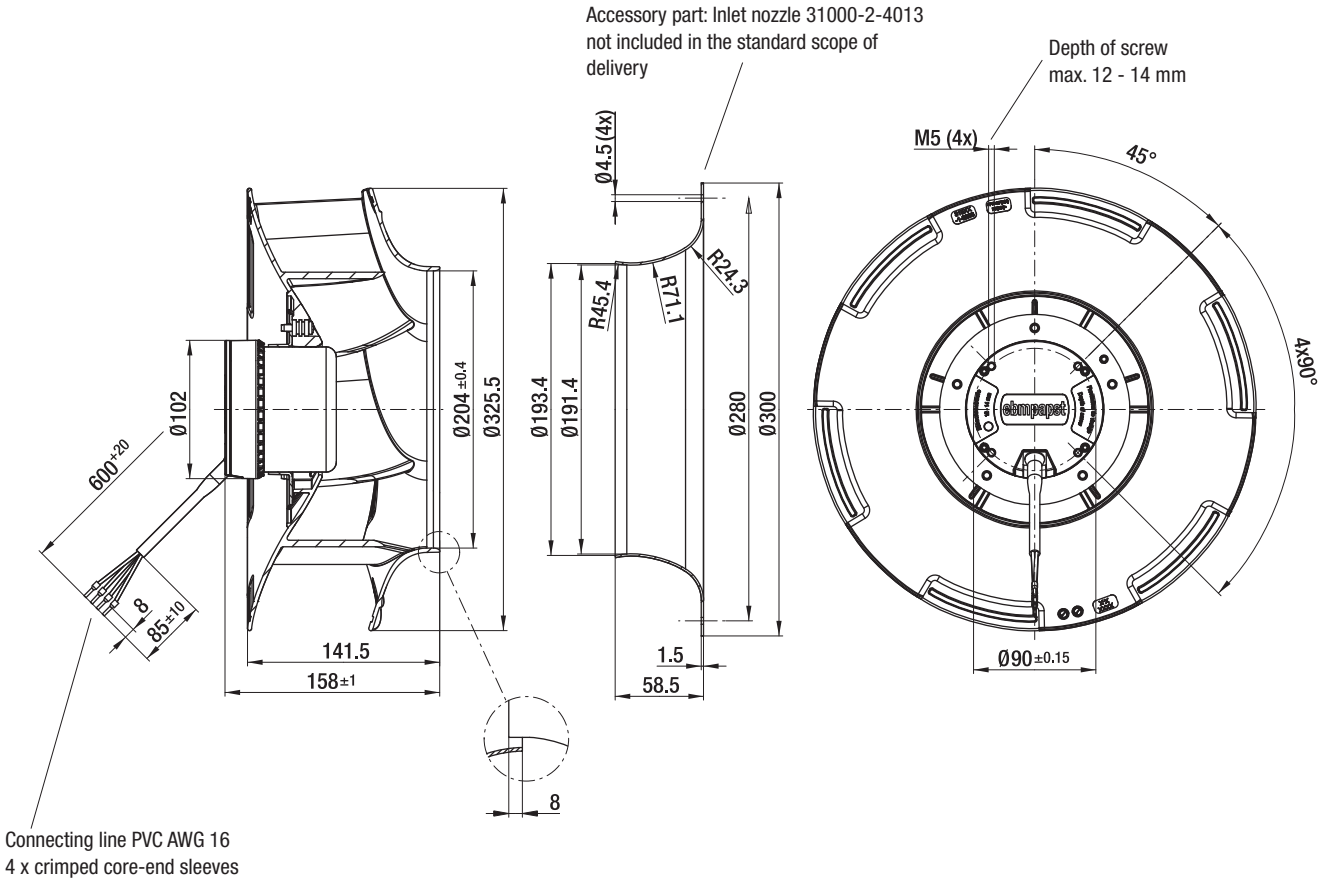

max. 155 m³/h

DC-Querstromlüfter

Series QG 030 201...413 x 50 x 48 mm

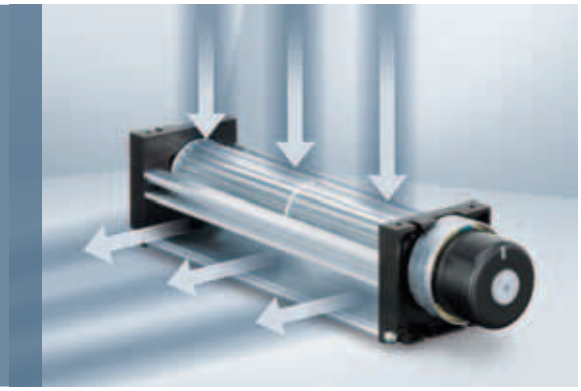

- **Material:** Housing: Aluminium
  Housing side parts: Plastic
  Impeller: Aluminium
- **Direction of air flow:** See photo
- **Connection:** Via single wires AWG 24, TR 64
- **Highlights:** Motor with ball bearing system
  Impeller retaining plate with plain bearing
- **Mass:** 235 / 290 / 380 / 415 g

- **Possible special versions:**
  (See chapter DC fans - specials)
  - Speed signal
  - Protection against moisture

Nominal data	Air flow	Air flow	Nominal voltage	Voltage range	Sound power level	Sintec sleeve bearings Ball bearings	Input power	Nominal speed	Temperature range	Service life L_{10} (40 °C) ebm-papst Standard / Service life L_{10} (T_{max}) ebm-papst Standard	Life expectancy L_{10IPC} (40 °C) see page 17	Curve
Type	**m³/h**	**CFM**	**VDC**	**VDC**	**db(A)**	**Bel(A)**	**□/■**	**Watts**	**°C**	**Hours**	**Hours**	
QG 030-148/12	75	44	**12**	8...14	49	5,7	□/■	6,2	-20...+60	30 000 / 20 000	50 000	①
QG 030-198/12	100	59	**12**	8...14	51	5,8	□/■	8,0	-20...+60	30 000 / 20 000	50 000	②
QG 030-303/12	140	82	**12**	8...14	51	5,8	□/■	8,7	-20...+60	30 000 / 20 000	50 000	③
QG 030-353/12	155	91	**12**	8...14	51	5,9	□/■	9,6	-20...+60	30 000 / 20 000	50 000	④
QG 030-148/14	75	44	**24**	16...28	49	5,7	□/■	6,2	-20...+60	30 000 / 20 000	50 000	①
QG 030-198/14	100	59	**24**	16...28	51	5,8	□/■	8,0	-20...+60	30 000 / 20 000	50 000	②
QG 030-303/14	140	82	**24**	16...28	51	5,8	□/■	8,7	-20...+60	30 000 / 20 000	50 000	③
QG 030-353/14	155	91	**24**	16...28	51	5,9	□/■	9,6	-20...+60	30 000 / 20 000	50 000	④

Subject to alternations

The values for service life were recorded with the fan installed horizontally.

Type Dimension:	L	L_1	Mass
QG 030-148/ ..	203,4 $^{+1,5}$	148	235 g
QG 030-198/ ..	260,4 $^{+1,5}$	198	290 g
QG 030-303/ ..	365,4 $^{+1,5}$	303	380 g
QG 030-353/ ..	415,4 $^{+1,5}$	353	415 g

------ Tangential fans are only suitable for operation with high rate and low back pressure.

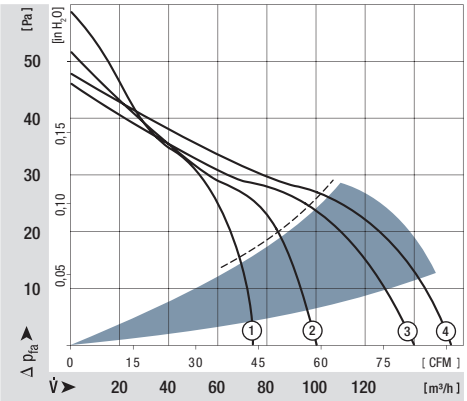

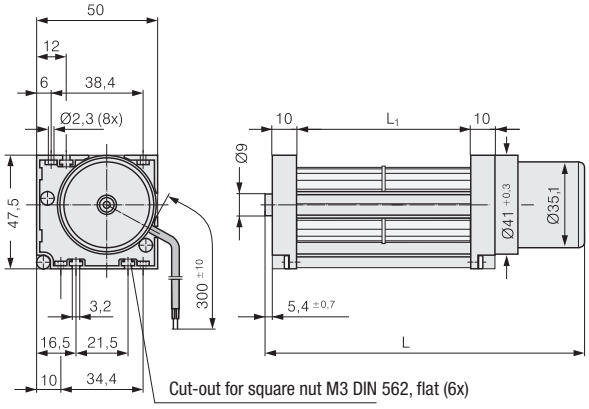

ebmpapst

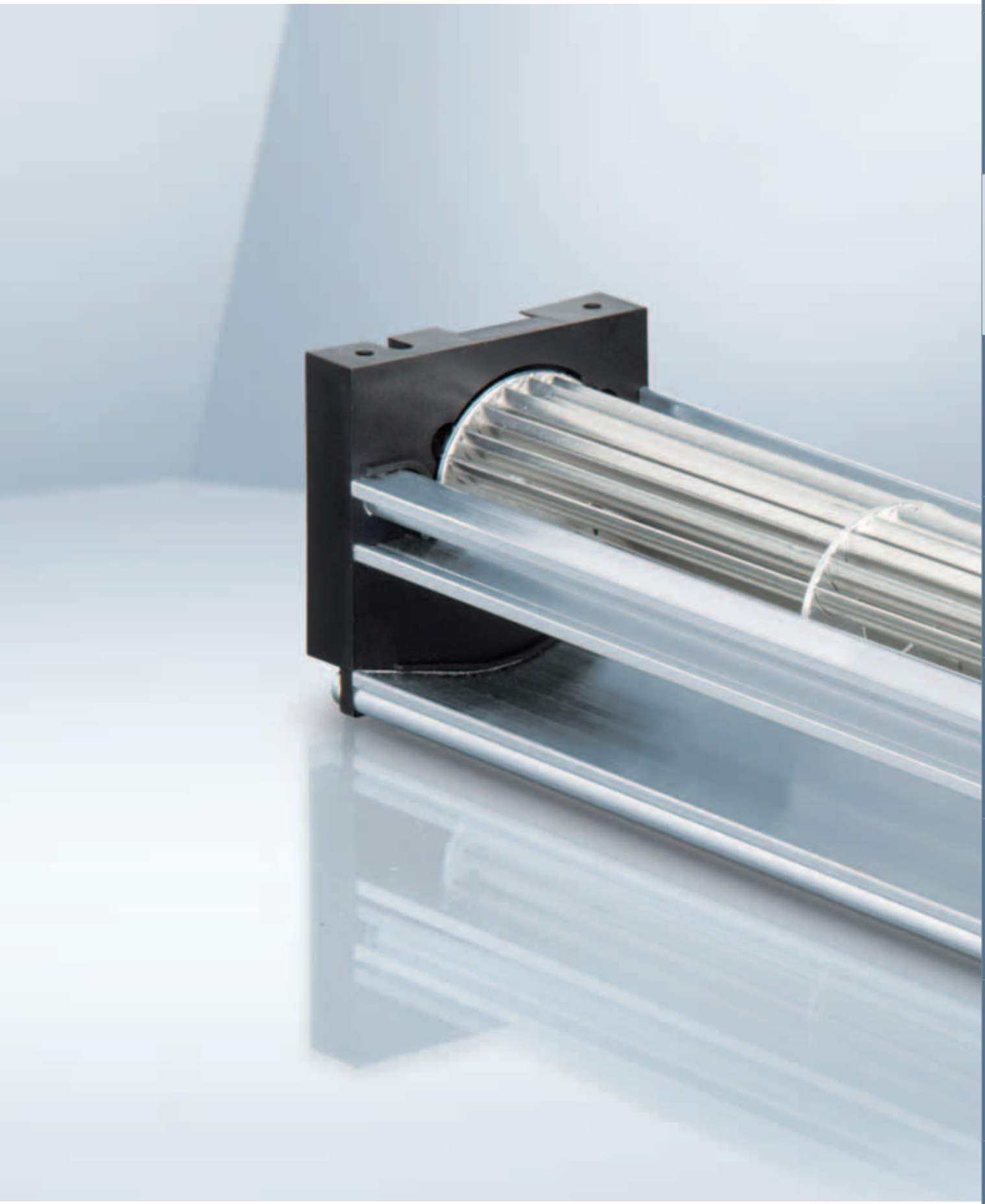

max. 95 m³/h

DC centrifugal fans and blowers

Ø 85 mm

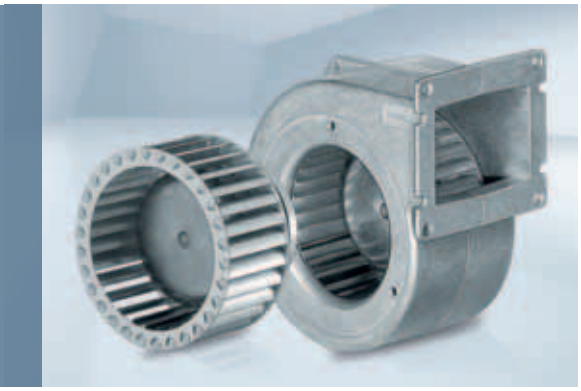

- **Material:** Housing: Die-cast aluminium
  Impeller: Hot-dip galvanised sheet steel
  Rotor: Galvanised
- **Direction of rotation:** Clockwise, seen on rotor
- **Type of protection:** IP 22
- **Insulation class:** "B"
- **Mounting position:** Any
- **Condensate discharges:** None
- **Operation mode:** Continuous operation (S1)
- **Bearings:** Maintenance-free ball bearings

Nominal data		Curve	Nominal voltage	Voltage range	Air flow	Speed / rpm	Input power	Current draw	Sound power level	Min. back-pressure	Perm. amb. temp.	Technical features and electrical connections
Type	**Motor**		**VDC**	**VDC**	**m³/h**	**rpm**	**W**	**A**	**dB(A)**	**Pa**	**°C**	
***1G 085**	M1G 045-BE	A	24	16-28	95	2850	14	0,64	57	0	-25...+60	p. 255 / G)
***1G 085**	M1G 045-BE	A	48	36-57	95	2850	14	0,32	57	0	-25...+60	p. 255 / G)

Subject to alternations

Curve:

U_N = nominal voltage (24 V /48 V)

U_R = overvoltage (28 V / 57 V)

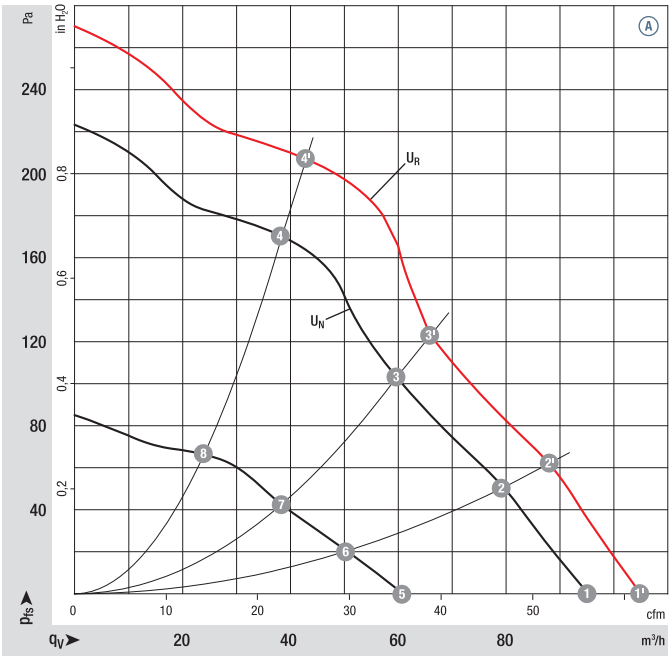

	n rpm	P_{ed} W	Lp_A dB(A)	η_{tL} %
A 1'	3180	19	59	—
A 2'	3300	16	57	28
A 3'	3500	15	57	32
A 4'	3800	12	57	37
A 1	2850	14	57	—
A 2	3000	12	55	28
A 3	3180	11	55	32
A 4	3400	9	54	37
A 5	1890	5	46	—
A 6	1970	4	44	25
A 7	2070	4	44	30
A 8	2170	3	42	33

Air performance measured as per: ISO 5801, Installation category A, with ebm-papst inlet nozzle without protection against accidental contact. Suction-side noise levels: LWA as per ISO 13347, LpA measured at 1 m distance to fan axis. The acoustic values given are only valid under the measurment conditions listed and may vary depending on the installation situation. With any deviation to the standard setup, the specific values have to be checked and reviewed once installed or fitted!
For detailed information see http://www.ebmpapst.com/general conditions

ebmpapst

- **Technical features:** See electrical connections p. 255
- **Cable exit:** Axial
- **Protection class:** I
- **Product conforming to standards:** EN 60950-1
- **Approvals:** Ⓐ (48 VDC) CCC

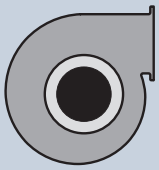

Centrifugal fans	Mass centrifugal fans kg	Centrifugal blowers with flange	Mass centrifugal blowers kg
R1G 085-AB05 -01	0,5	**G1G 085-AB05 -01**	0,8
R1G 085-AB07 -01	0,5	**G1G 085-AB07 -01**	0,8

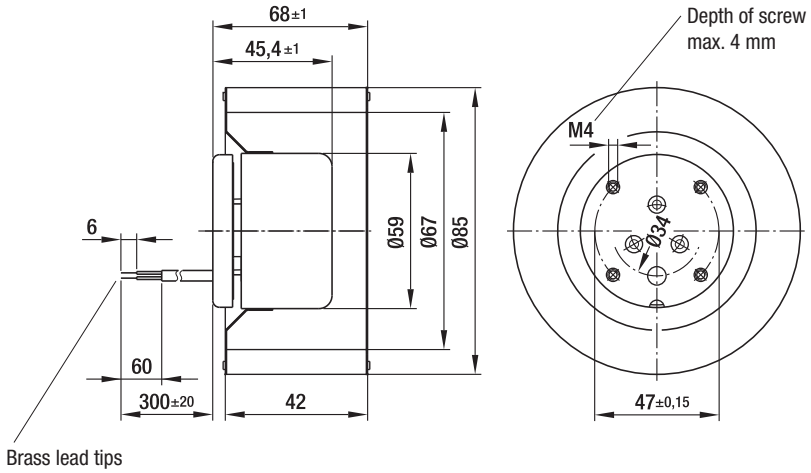

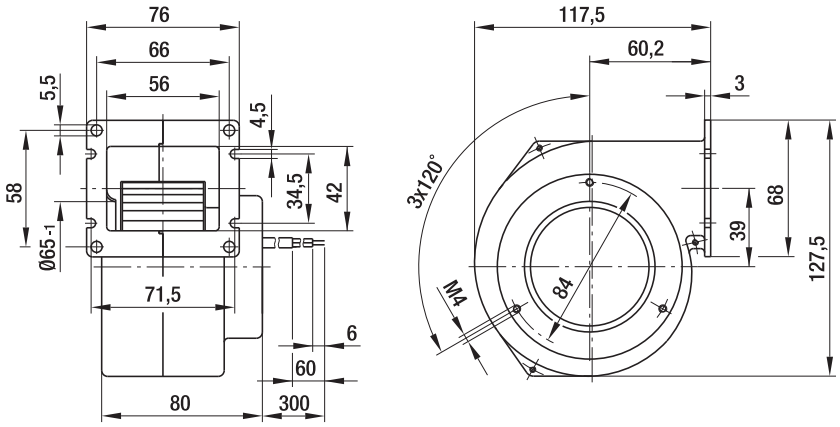

max. 95 m³/h

DC centrifugal fans and blowers

Ø 97 mm

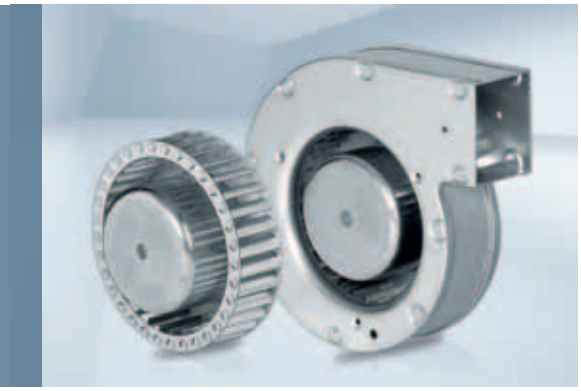

- **Material:** Housing: Hot-dip galvanised sheet steel
  Impeller: Hot-dip galvanised sheet steel
  Rotor: Galvanised
- **Direction of rotation:** Clockwise, seen on rotor
- **Type of protection:** IP 22
- **Insulation class:** "B"
- **Mounting position:** Any
- **Condensate discharges:** None
- **Operation mode:** Continuous operation (S1)
- **Bearings:** Maintenance-free ball bearings

Nominal data		Curve	Nominal voltage	Voltage range	Air flow	Speed / rpm	Input power	Current draw	Sound power level	Min. back-pressure	Perm. amb. temp.	Technical features and electrical connections
Type	**Motor**		**VDC**	**VDC**	**m³/h**	**rpm**	**W**	**A**	**dB(A)**	**Pa**	**°C**	
***1G 097**	M1G 045-BE	A	24	16-28	95	2650	16	0,75	59	0	-25...+60	p. 255 / G)
***1G 097**	M1G 045-BE	A	48	36-57	95	2650	16	0,38	59	0	-25...+60	p. 255 / G)

Subject to alternations

Curve:

U_N = nominal voltage (24 V /48 V)

U_R = overvoltage (28 V / 57 V)

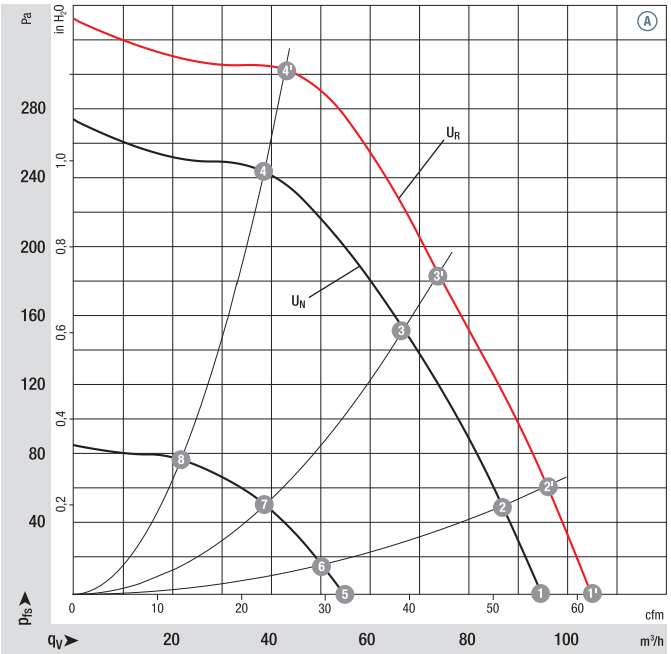

		n rpm	P_{ed} W	Lp_A dB(A)	η_{tL} %
A	1'	2920	22	62	—
A	2'	3030	21	61	41
A	3'	3300	17	59	48
A	4'	3700	13	58	48
A	1	2650	16	59	—
A	2	2730	15	58	41
A	3	2960	13	56	48
A	4	3290	10	55	48
A	5	1615	4	45	—
A	6	1650	4	45	38
A	7	1745	4	43	46
A	8	1880	3	42	47

Air performance measured as per: ISO 5801, Installation category A, with ebm-papst inlet nozzle without protection against accidental contact. Suction-side noise levels: LWA as per ISO 13347, LpA measured at 1 m distance to fan axis. The acoustic values given are only valid under the measurment conditions listed and may vary depending on the installation situation. With any deviation to the standard setup, the specific values have to be checked and reviewed once installed or fitted!
For detailed information see http://www.ebmpapst.com/general conditions

ebmpapst

- **Technical features:** See electrical connections p. 255
- **Cable exit:** Axial
- **Protection class:** I
- **Product conforming to standards:** EN 60950-1
- **Approvals:** Ⓐ (48 VDC) CCC

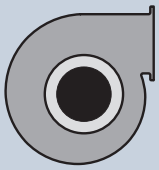

Centrifugal fans	Mass centrifugal fans kg	Centrifugal blowers with flange	Mass centrifugal blowers kg
R1G 097-AA05 -01	0,5	**G1G 097-AA05 -01**	0,8
R1G 097-AA07 -01	0,5	**G1G 097-AA07 -01**	0,8

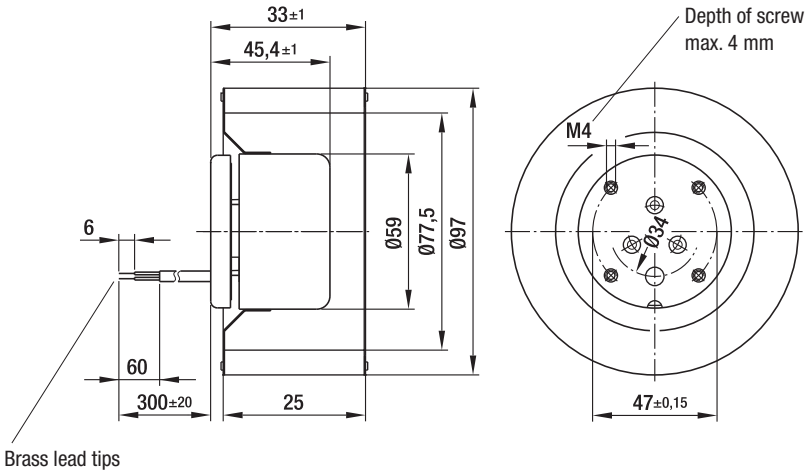

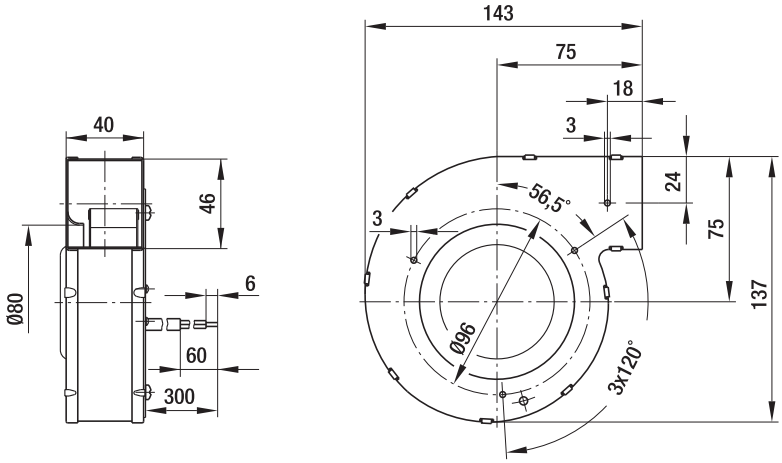

max. 200 m³/h

DC centrifugal fans and blowers

Ø 108 mm

- **Material:** Housing: Die-cast aluminium
  Impeller: Hot-dip galvanised sheet steel
  Rotor: Galvanised
- **Direction of rotation:** Clockwise, seen on rotor
- **Type of protection:** IP 22
- **Insulation class:** "B"
- **Mounting position:** Any
- **Condensate discharges:** None
- **Operation mode:** Continuous operation (S1)
- **Bearings:** Maintenance-free ball bearings

Nominal data		Curve	Nominal voltage	Voltage range	Air flow	Speed / rpm	Input power	Current draw	Sound power level	Min. back-pressure	Perm. amb. temp.	Technical features and electrical connections
Type	**Motor**		**VDC**	**VDC**	**m³/h**	**rpm**	**W**	**A**	**dB(A)**	**Pa**	**°C**	
***1G 108**	M1G 055-BD	A	24	16-28	200	3000	42	2,00	65	0	-25...+60	p. 255 / G)
***1G 108**	M1G 055-BD	A	48	36-57	200	3000	42	1,00	65	0	-25...+60	p. 255 / G)

Subject to alternations

Curve:

U_N = nominal voltage (24 V /48 V)

U_R = overvoltage (28 V / 57 V)

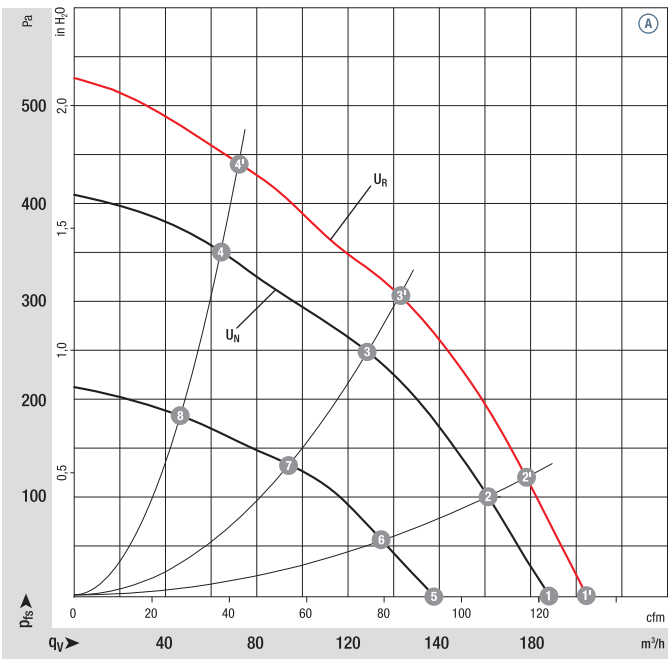

		n rpm	P_{ed} W	Lp_A dB(A)	η_{tL} %
A	1'	3230	55	67	—
A	2'	3410	52	66	33
A	3'	3800	43	65	41
A	4'	4100	35	64	33
A	1	3000	42	65	—
A	2	3140	40	64	33
A	3	3420	32	63	41
A	4	3690	26	63	33
A	5	2300	20	61	—
A	6	2380	17	58	33
A	7	2550	14	55	41
A	8	2720	11	55	33

Air performance measured as per: ISO 5801, Installation category A, with ebm-papst inlet nozzle without protection against accidental contact. Suction-side noise levels: LWA as per ISO 13347, LpA measured at 1 m distance to fan axis. The acoustic values given are only valid under the measurment conditions listed and may vary depending on the installation situation. With any deviation to the standard setup, the specific values have to be checked and reviewed once installed or fitted!
For detailed information see http://www.ebmpapst.com/general conditions

ebmpapst

- **Technical features:** See electrical connections p. 255
- **EMC:** Interference emission acc. to EN 61000-6-3
  Interference immunity acc. to EN 61000-6-2
- **Cable exit:** Axial
- **Protection class:** I
- **Product conforming to standards:** EN 60950-1
- **Approvals:** Ⓐ (24 VDC) UL, CSA, Ⓐ (48 VDC) CCC

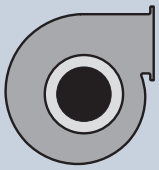

Centrifugal fans	Mass centrifugal fans kg	Centrifugal blowers with flange	Mass centrifugal blowers kg
R1G 108-AB17 -02	0,7	**G1G 108-AB17 -02**	1,4
R1G 108-AB41 -02	0,7	**G1G 108-AB41 -02**	1,4

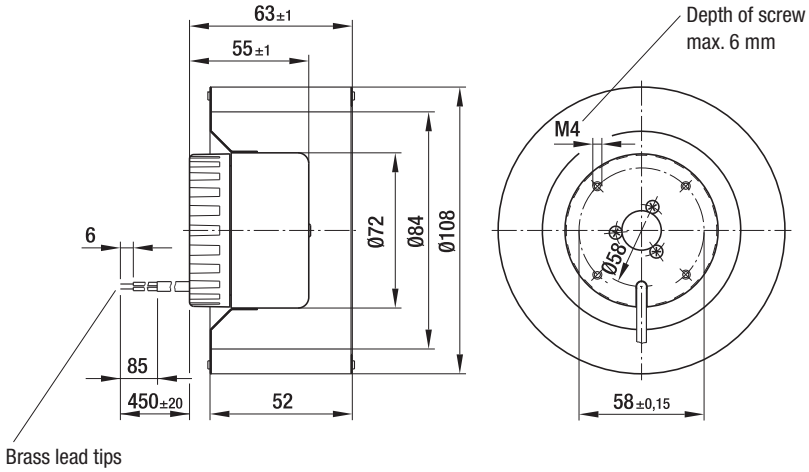

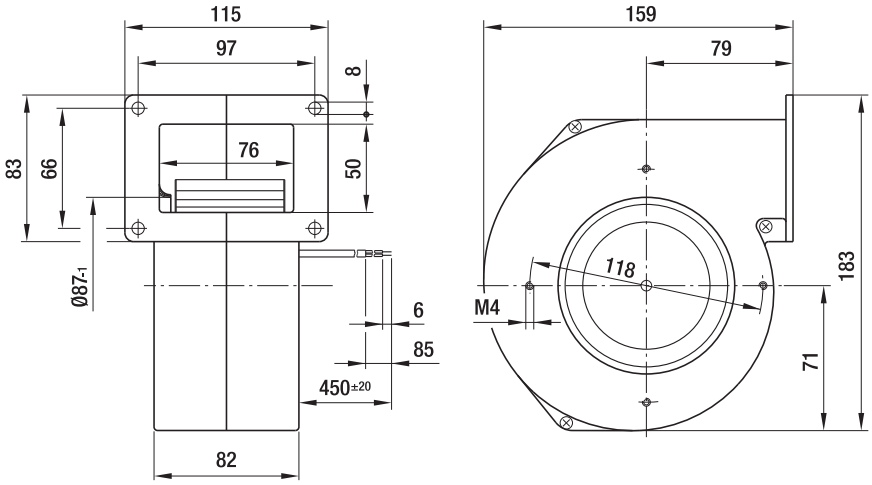

max. 255 m³/h

DC centrifugal fans and blowers

Ø 120 mm

- **Material:** Housing: Die-cast aluminium
  Impeller: Hot-dip galvanised sheet steel
  Rotor: Galvanised
- **Direction of rotation:** Clockwise, seen on rotor
- **Type of protection:** IP 22
- **Insulation class:** "B"
- **Mounting position:** Any
- **Condensate discharges:** None
- **Operation mode:** Continuous operation (S1)
- **Bearings:** Maintenance-free ball bearings

Nominal data		Curve	Nominal voltage	Voltage range	Air flow	Speed / rpm	Input power	Current draw	Sound power level	Min. back-pressure	Perm. amb. temp.	Technical features and electrical connections
Type	**Motor**		**VDC**	**VDC**	**m³/h**	**rpm**	**W**	**A**	**dB(A)**	**Pa**	**°C**	
***1G 120**	M1G 055-BD	Ⓐ	24	16-28	255	2200	40	1,90	62	0	-25...+60	p. 255 / G)
***1G 120**	M1G 055-BD	Ⓐ	48	36-57	255	2200	40	0,95	62	0	-25...+60	p. 255 / G)

Subject to alternations

Curve:

U_N = nominal voltage (24 V /48 V)

U_R = overvoltage (28 V / 57 V)

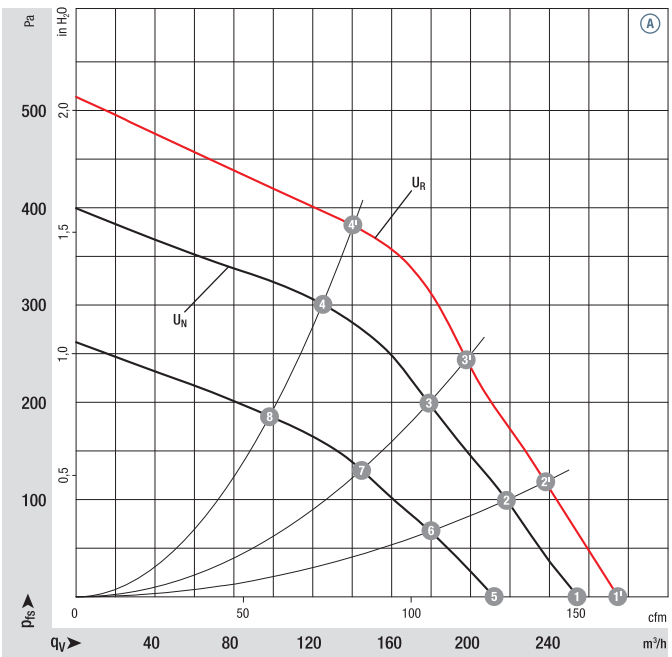

		n rpm	P_{ed} W	Lp_A dB(A)	η_{tL} %
Ⓐ	1'	2410	50	63	—
Ⓐ	2'	2620	47	62	58
Ⓐ	3'	2870	44	61	60
Ⓐ	4'	3200	36	62	55
Ⓐ	1	2200	40	62	—
Ⓐ	2	2410	36	60	59
Ⓐ	3	2600	32	58	62
Ⓐ	4	2880	25	58	55
Ⓐ	5	1870	24	55	—
Ⓐ	6	1990	21	54	58
Ⓐ	7	2100	18	53	61
Ⓐ	8	2310	14	54	54

Air performance measured as per: ISO 5801, Installation category A, with ebm-papst inlet nozzle without protection against accidental contact. Suction-side noise levels: LWA as per ISO 13347, LpA measured at 1 m distance to fan axis. The acoustic values given are only valid under the measurment conditions listed and may vary depending on the installation situation. With any deviation to the standard setup, the specific values have to be checked and reviewed once installed or fitted!
For detailed information see http://www.ebmpapst.com/general conditions

ebmpapst

- **Technical features:** See electrical connections p. 255
- **EMC:** Interference emission acc. to EN 61000-6-3
  Interference immunity acc. to EN 61000-6-2
- **Cable exit:** Axial
- **Protection class:** I
- **Product conforming to standards:** EN 60950-1
- **Approvals:** Ⓐ (24 VDC) UL, CSA, Ⓐ (48 VDC) CCC

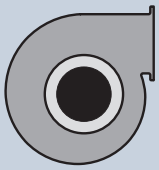

Centrifugal fans	Mass centrifugal fans kg	Centrifugal blowers with flange	Mass centrifugal blowers kg
R1G 120-AB67 -02	0,8	**G1G 120-AB67 -02**	1,6
R1G 120-AB71 -02	0,8	**G1G 120-AB71 -02**	1,6

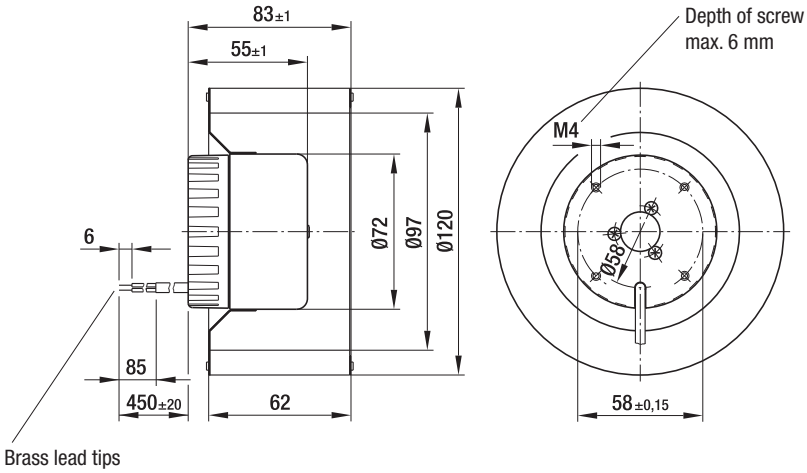

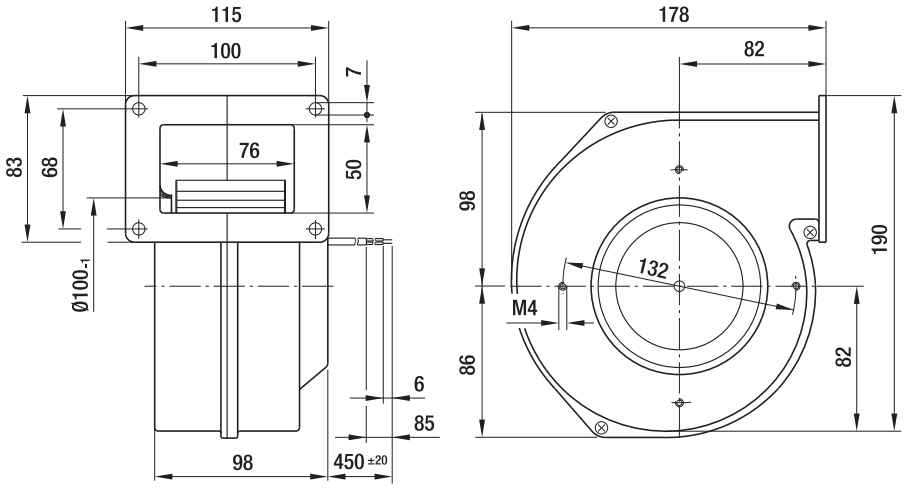

max. 225 m³/h

DC centrifugal fans and blowers

Ø 133 mm

- **Material:** Housing: Die-cast aluminium
  Impeller: Hot-dip galvanised sheet steel
  Rotor: Galvanised
- **Direction of rotation:** Clockwise, seen on rotor
- **Type of protection:** IP 22
- **Insulation class:** "B"
- **Mounting position:** Any
- **Condensate discharges:** None
- **Operation mode:** Continuous operation (S1)
- **Bearings:** Maintenance-free ball bearings

Nominal data		Curve	Nominal voltage	Voltage range	Air flow	Speed / rpm	Input power	Current draw	Sound power level	Min. back-pressure	Perm. amb. temp.	Technical features and electrical connections
Type	**Motor**		**VDC**	**VDC**	**m³/h**	**rpm**	**W**	**A**	**dB(A)**	**Pa**	**°C**	
***1G 133**	M1G 055-BD	A	24	16-28	225	2000	40	2,20	64	0	-25...+60	p. 255 / G)
***1G 133**	M1G 055-BD	A	48	36-57	225	2000	40	1,10	64	0	-25...+60	p. 255 / G)

Subject to alternations

Curve:

U_N = nominal voltage (24 V /48 V)

U_R = overvoltage (28 V / 57 V)

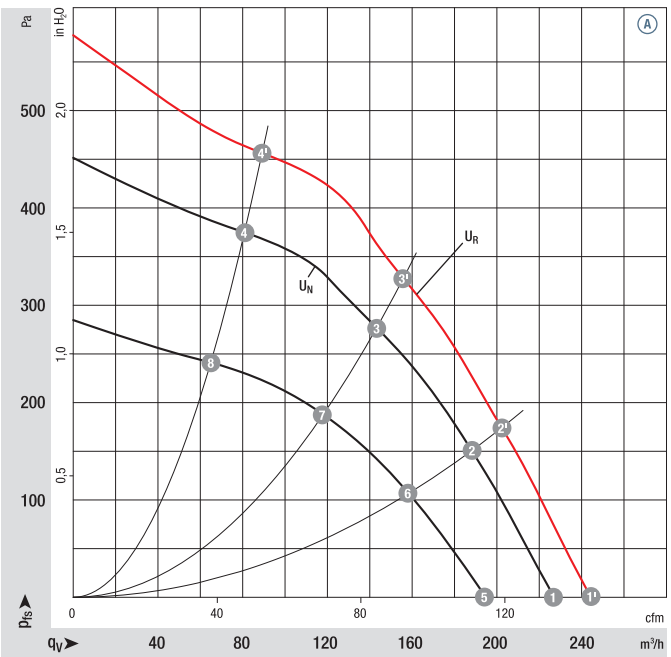

	n rpm	P_{ed} W	Lp_A dB(A)	η_{tL} %
A 1'	2170	57	66	—
A 2'	2410	51	66	47
A 3'	2750	44	64	49
A 4'	3200	36	66	32
A 1	2000	45	64	—
A 2	2230	40	64	49
A 3	2540	35	62	51
A 4	2920	27	63	33
A 5	1750	28	60	—
A 6	1910	24	59	50
A 7	2120	20	58	53
A 8	2370	15	59	35

Air performance measured as per: ISO 5801, Installation category A, with ebm-papst inlet nozzle without protection against accidental contact. Suction-side noise levels: LWA as per ISO 13347, LpA measured at 1 m distance to fan axis. The acoustic values given are only valid under the measurment conditions listed and may vary depending on the installation situation. With any deviation to the standard setup, the specific values have to be checked and reviewed once installed or fitted!
For detailed information see http://www.ebmpapst.com/general conditions

ebmpapst

- **Technical features:** See electrical connections p. 255
- **EMC:** Interference emission acc. to EN 61000-6-3
  Interference immunity acc. to EN 61000-6-2
- **Cable exit:** Lateral
- **Protection class:** I
- **Product conforming to standards:** EN 60950-1
- **Approvals:** Ⓐ (24 VDC) UL, CSA, Ⓐ (48 VDC) CCC

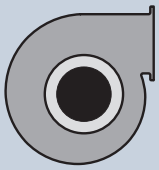

Centrifugal fans	Mass centrifugal fans kg	Centrifugal blowers with flange	Mass centrifugal blowers kg
R1G 133-AE19 -02	0,7	**G1G 133-DE19 -02**	1,3
R1G 133-AE03 -02	0,7	**G1G 133-DE03 -02**	1,3

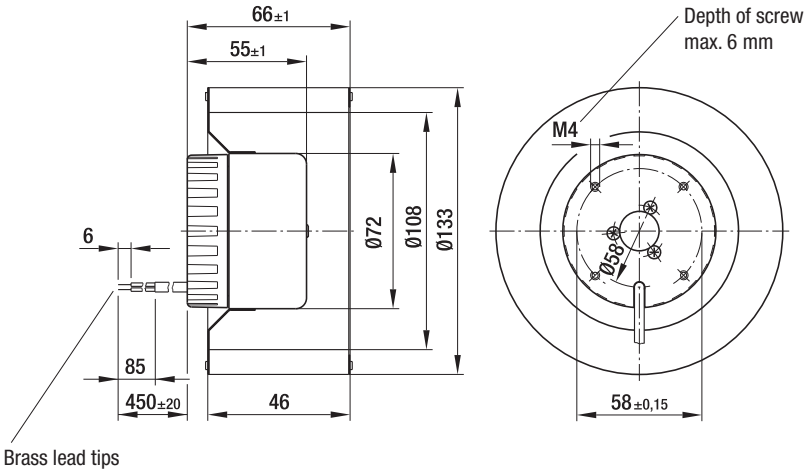

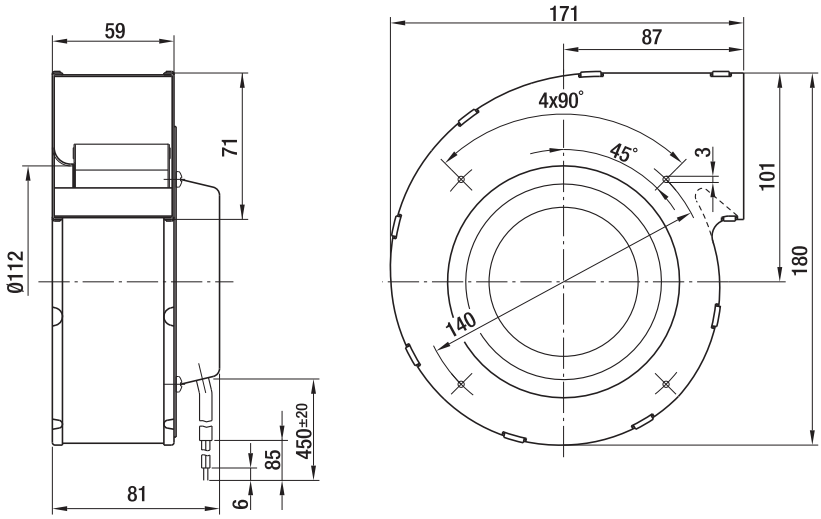

max. 410 m³/h

DC centrifugal fans and blowers

Ø 140 mm

- **Material:** Housing: Die-cast aluminium
  Impeller: Hot-dip galvanised sheet steel
  Rotor: Galvanised
- **Direction of rotation:** Clockwise, seen on rotor
- **Type of protection:** IP 22
- **Insulation class:** "B"
- **Mounting position:** Any
- **Condensate discharges:** None
- **Operation mode:** Continuous operation (S1)
- **Bearings:** Maintenance-free ball bearings

Nominal data		Curve	Nominal voltage	Voltage range	Air flow	Speed / rpm	Input power	Current draw	Sound power level	Min. back-pressure	Perm. amb. temp.	Technical features and electrical connections
Type	**Motor**		**VDC**	**VDC**	**m³/h**	**rpm**	**W**	**A**	**dB(A)**	**Pa**	**°C**	
***1G 140**	M1G 055-BD	Ⓐ	24	16-28	400	1750	54	2,50	63	0	-25...+60	p. 255 / G)
***1G 140**	M1G 055-BD	Ⓐ	48	36-57	410	1750	54	1,30	63	0	-25...+60	p. 255 / G)

Subject to alternations

Curve:

U_N = nominal voltage (24 V /48 V)

U_R = overvoltage (28 V / 57 V)

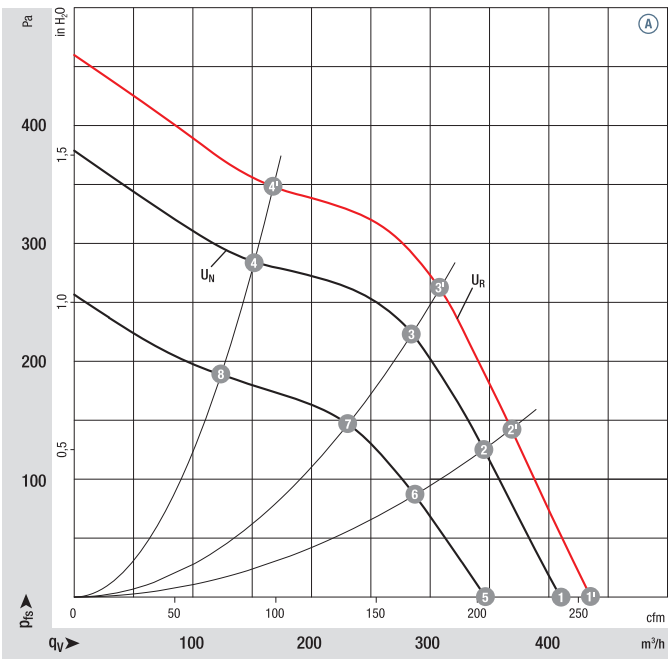

		n rpm	P_{ed} W	Lp_A dB(A)	η_{tL} %
Ⓐ	1'	1850	65	64	—
Ⓐ	2'	2020	61	61	50
Ⓐ	3'	2200	57	59	54
Ⓐ	4'	2550	43	60	40
Ⓐ	1	1750	54	63	—
Ⓐ	2	1900	50	59	51
Ⓐ	3	2030	45	58	54
Ⓐ	4	2310	32	58	40
Ⓐ	5	1500	34	60	—
Ⓐ	6	1580	29	56	50
Ⓐ	7	1670	25	54	53
Ⓐ	8	1880	19	53	41

Air performance measured as per: ISO 5801, Installation category A, with ebm-papst inlet nozzle without protection against accidental contact. Suction-side noise levels: LWA as per ISO 13347, LpA measured at 1 m distance to fan axis. The acoustic values given are only valid under the measurment conditions listed and may vary depending on the installation situation. With any deviation to the standard setup, the specific values have to be checked and reviewed once installed or fitted!
For detailed information see http://www.ebmpapst.com/general conditions

ebmpapst

- **Technical features:** See electrical connections p. 255
- **EMC:** Interference emission acc. to EN 61000-6-3
  Interference immunity acc. to EN 61000-6-2
- **Cable exit:** Axial
- **Protection class:** I
- **Product conforming to standards:** EN 60950-1
- **Approvals:** Ⓐ (48 VDC) CCC

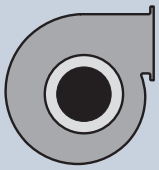

Centrifugal fans	Mass centrifugal fans kg	Centrifugal blowers with flange	Mass centrifugal blowers kg
R1G 140-AV17 -02	1,0	**G1G 140-AV17 -02**	2,3
R1G 140-AV21 -02	1,0	**G1G 140-AV21 -02**	2,3

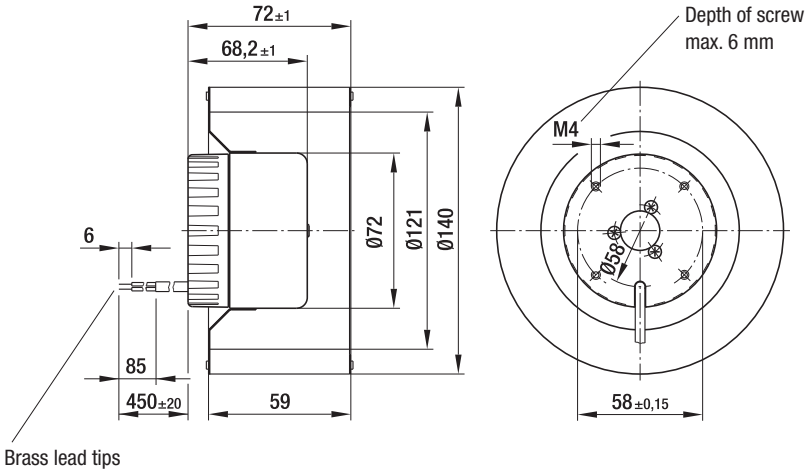

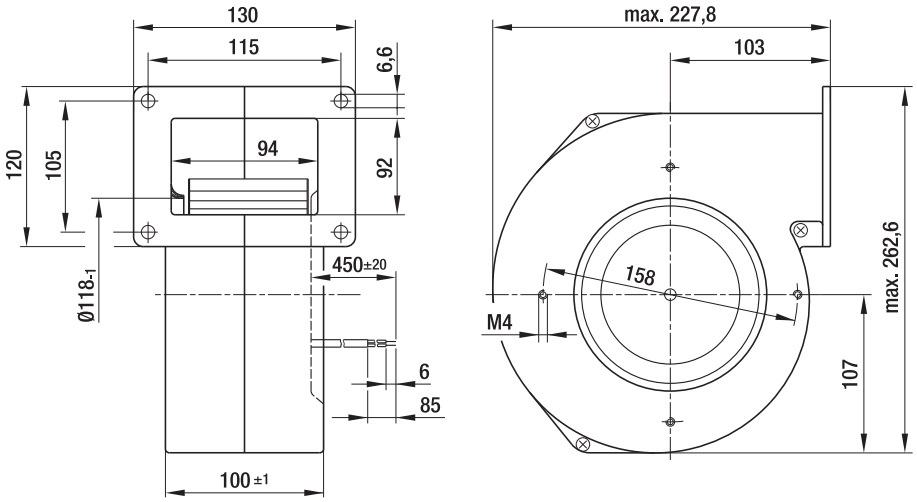

max. 470 m³/h

DC centrifugal fans and blowers

Ø 146 mm

- **Material:** Housing: Die-cast aluminium
  Impeller: Hot-dip galvanised sheet steel
  Rotor: Galvanised
- **Direction of rotation:** Clockwise, seen on rotor
- **Type of protection:** IP 42
- **Insulation class:** "B"
- **Mounting position:** Any
- **Condensate discharges:** None
- **Operation mode:** Continuous operation (S1)
- **Bearings:** Maintenance-free ball bearings

Nominal data		Curve	Nominal voltage	Voltage range	Air flow	Speed / rpm	Input power	Current draw	Sound power level	Min. back-pressure	Perm. amb. temp.	Technical features and electrical connections
Type	**Motor**		**VDC**	**VDC**	**m³/h**	**rpm**	**W**	**A**	**dB(A)**	**Pa**	**°C**	
***1G 146**	M1G 074-BF	A	24	16-28	470	2200	100	5,00	68	0	-25...+60	p. 255 / G)
***1G 146**	M1G 074-BF	A	48	36-57	465	2150	100	2,60	67	0	-25...+60	p. 255 / G)

Subject to alternations

Curve:

U_N = nominal voltage (24 V /48 V)

U_R = overvoltage (28 V / 57 V)

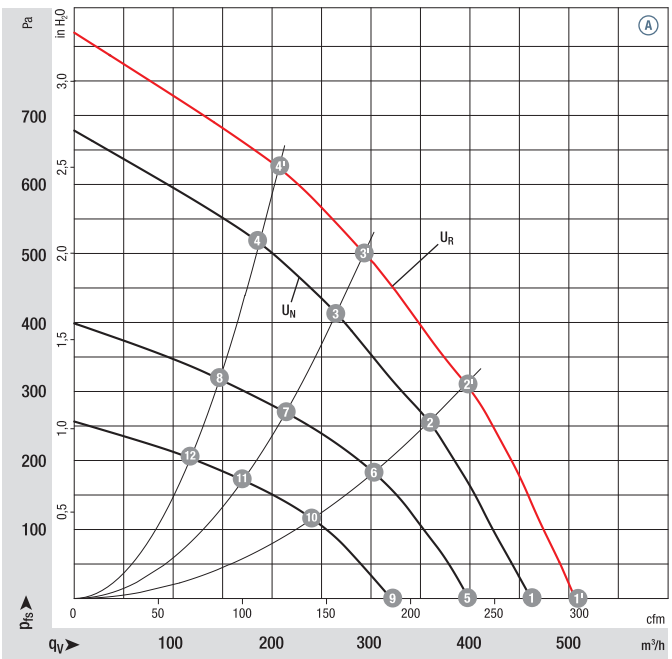

		n rpm	P_{ed} W	Lp_A dB(A)	η_{tL} %
A	1'	2400	140	70	—
A	2'	2650	130	67	45
A	3'	3000	110	66	49
A	4'	3300	100	67	45
A	1	2200	100	68	—
A	2	2445	90	65	46
A	3	2750	84	64	49
A	4	3025	77	65	45
A	5	1890	68	63	—
A	6	2075	57	60	46
A	7	2250	48	61	49
A	8	2335	41	61	45
A	9	1520	37	59	—
A	10	1670	32	55	46
A	11	1815	27	55	49
A	12	1920	23	55	45

Air performance measured as per: ISO 5801, Installation category A, with ebm-papst inlet nozzle without protection against accidental contact. Suction-side noise levels: LWA as per ISO 13347, LpA measured at 1 m distance to fan axis. The acoustic values given are only valid under the measurment conditions listed and may vary depending on the installation situation. With any deviation to the standard setup, the specific values have to be checked and reviewed once installed or fitted!
For detailed information see http://www.ebmpapst.com/general conditions

ebmpapst

- **Technical features:** See electrical connections p. 255
- **EMC:** Interference emission acc. to EN 61000-6-3
  Interference immunity acc. to EN 61000-6-2
- **Cable exit:** Axial
- **Protection class:** I
- **Product conforming to standards:** EN 60950-1
- **Approvals:** UL, CSA, CCC (only centrifugal blowers)

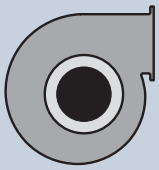

Centrifugal fans	Mass centrifugal fans kg	Centrifugal blowers with flange	Mass centrifugal blowers kg
R1G 146-AA07 -52	1,4	**G1G 146-BA07 -52**	2,8
R1G 146-AA11 -52	1,4	**G1G 146-BA11 -52**	2,8

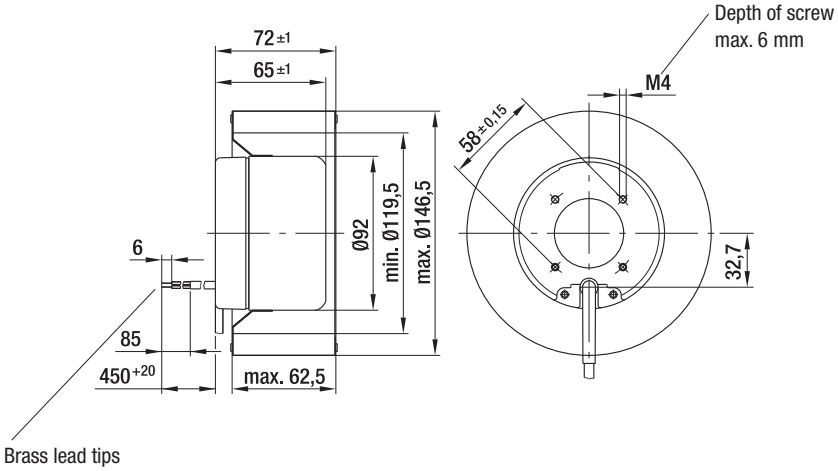

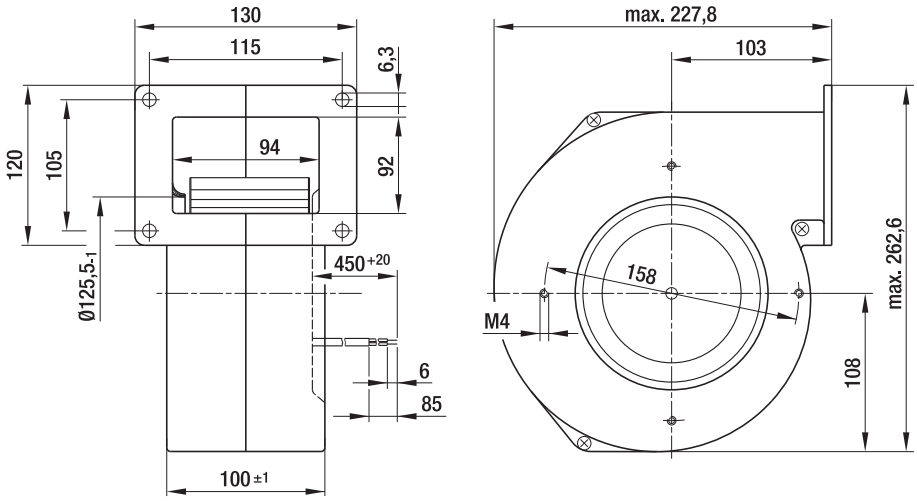

max. 505 m³/h

DC centrifugal fans and blowers

Ø 160 mm

- **Material:** Housing: Die-cast aluminium
  Impeller: Hot-dip galvanised sheet steel
  Rotor: Galvanised
- **Direction of rotation:** Clockwise, seen on rotor
- **Type of protection:** IP 42
- **Insulation class:** "B"
- **Mounting position:** Any
- **Condensate discharges:** None
- **Operation mode:** Continuous operation (S1)
- **Bearings:** Maintenance-free ball bearings

Nominal data		Curve	Nominal voltage	Voltage range	Air flow	Speed / rpm	Input power	Current draw	Sound power level	Min. back-pressure	Perm. amb. temp.	Technical features and electrical connections
Type	**Motor**		**VDC**	**VDC**	**m³/h**	**rpm**	**W**	**A**	**dB(A)**	**Pa**	**°C**	
***1G 160**	M1G 074-BF	A	24	16-28	505	1750	105	5,80	67	0	-25...+60	p. 255 / G)
***1G 160**	M1G 074-BF	A	48	36-57	505	1750	105	2,90	67	0	-25...+60	p. 255 / G)

Subject to alternations

Curve:

U_N = nominal voltage (24 V /48 V)

U_R = overvoltage (28 V / 57 V)

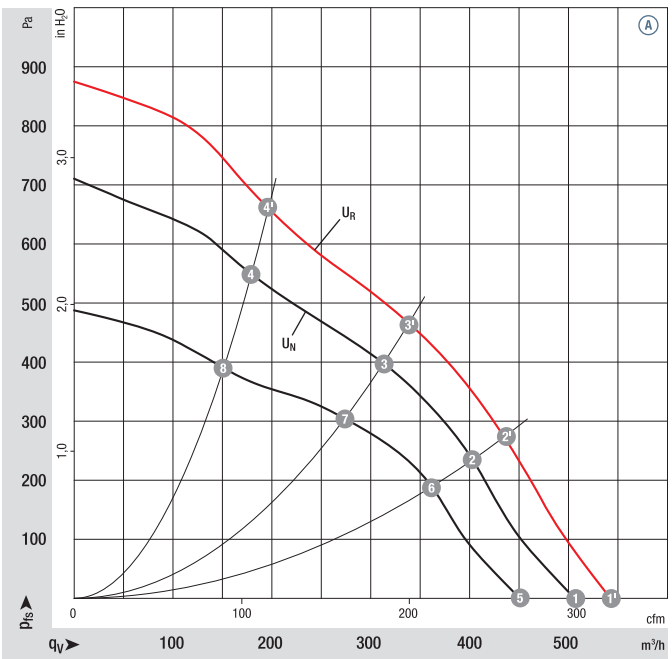

		n rpm	P_{ed} W	Lp_A dB(A)	η_{tL} %
A	1'	1890	134	68	—
A	2'	2200	118	67	52
A	3'	2500	110	67	57
A	4'	2900	102	69	52
A	1	1750	105	67	—
A	2	2030	95	66	52
A	3	2270	90	65	57
A	4	2550	81	67	44
A	5	1580	72	62	—
A	6	1810	66	62	52
A	7	2000	58	62	57
A	8	2200	48	63	54

Air performance measured as per: ISO 5801, Installation category A, with ebm-papst inlet nozzle without protection against accidental contact. Suction-side noise levels: LWA as per ISO 13347, LpA measured at 1 m distance to fan axis. The acoustic values given are only valid under the measurment conditions listed and may vary depending on the installation situation. With any deviation to the standard setup, the specific values have to be checked and reviewed once installed or fitted!
For detailed information see http://www.ebmpapst.com/general conditions

ebmpapst

- **Technical features:** See electrical connections p. 255
- **EMC:** Interference emission acc. to EN 61000-6-3
  Interference immunity acc. to EN 61000-6-2
- **Cable exit:** Axial
- **Protection class:** I
- **Product conforming to standards:** EN 60950-1
- **Approvals:** UL, CSA

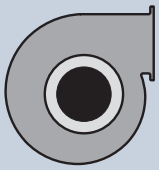

Centrifugal fans	Mass centrifugal fans kg	Centrifugal blowers with flange	Mass centrifugal blowers kg
R1G 160-AH29 -52	1,4	**G1G 160-BH29 -52**	2,8
R1G 160-AH39 -52	1,4	**G1G 160-BH39 -52**	2,8

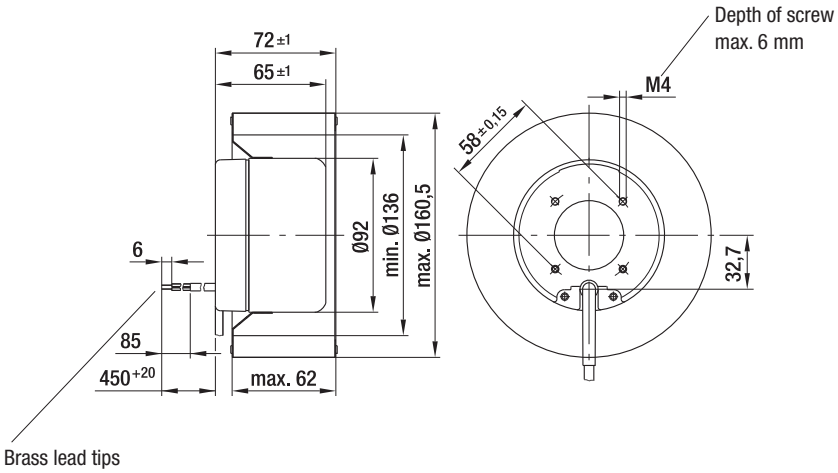

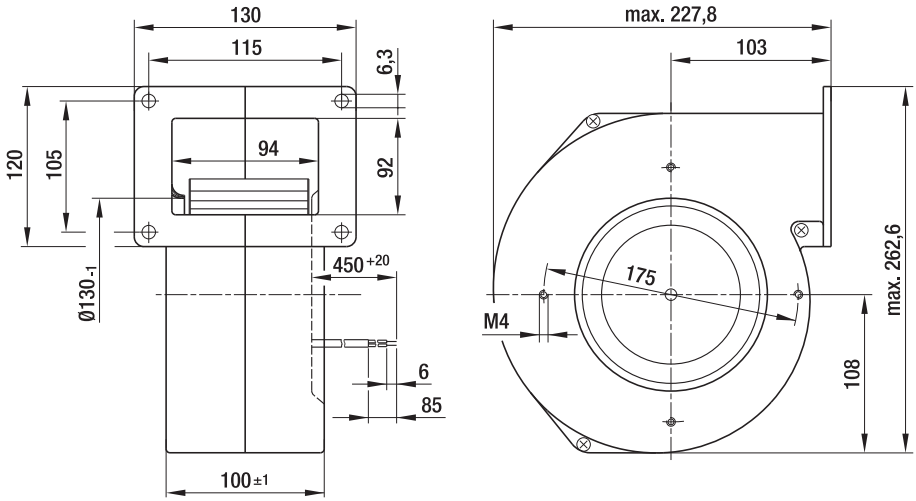

max. 700 m³/h

DC Centrifugal blowers

Ø 133 mm

- **Material:** Housing: Galvanised sheet steel
  Impeller: Galvanised sheet steel
  Rotor: Coated in black
- **Direction of rotation:** Clockwise, seen on rotor
- **Type of protection:** IP 42
- **Insulation class:** "B"
- **Mounting position:** Any
- **Condensate discharges:** None
- **Operation mode:** Continuous operation (S1)
- **Design:** Standard external-rotor motor anti-vibration mounted on both sides
- **Bearings:** Maintenance-free ball bearings

Nominal data		Curve	Nominal voltage	Voltage range	Air flow	Speed / rpm	Input power	Current draw	Sound power level	Min. back-pressure	Perm. amb. temp.	Technical features and electrical connections
Type	**Motor**		**VDC**	**VDC**	**m³/h**	**rpm**	**W**	**A**	**dB(A)**	**Pa**	**°C**	
D1G 133	M1G 074-BF	A	24	16-28	700	1780	105	5,60	62	50	-25...+60	p. 255 / G)
D1G 133	M1G 074-BF	A	48	36-57	700	1780	105	2,80	62	50	-25...+60	p. 255 / G)

Subject to alternations

Curve:

U_N = nominal voltage (24 V /48 V)

U_R = overvoltage (28 V / 57 V)

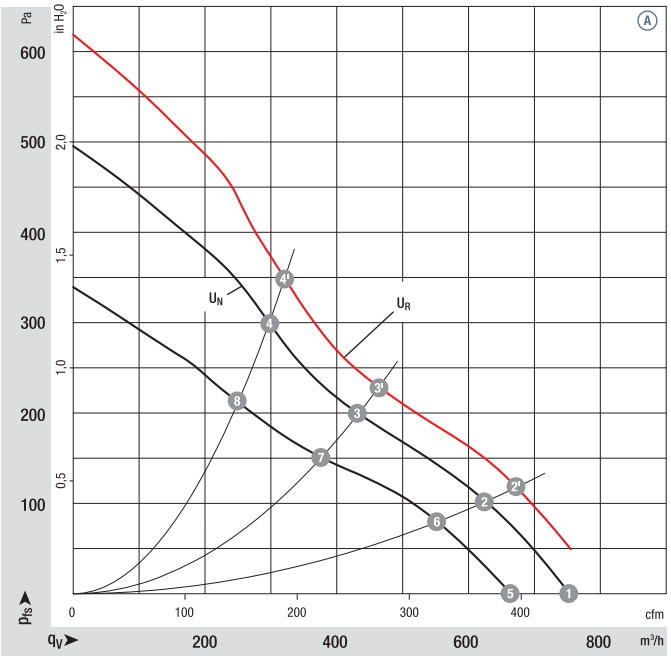

	n rpm	P_{ed} W	Lp_A dB(A)	η_{tL} %
A 1'	—	—	—	—
A 2'	2050	121	63	49
A 3'	2490	106	62	41
A 4'	2820	100	62	37
A 1	1780	105	62	—
A 2	1900	97	61	49
A 3	2310	86	59	41
A 4	2630	80	60	37
A 5	1500	73	59	—
A 6	1720	67	57	49
A 7	2020	58	56	41
A 8	2230	49	56	37

Air performance measured as per: ISO 5801, Installation category A, with ebm-papst inlet nozzle without protection against accidental contact. Suction-side noise levels: LWA as per ISO 13347, LpA measured at 1 m distance to fan axis. The acoustic values given are only valid under the measurment conditions listed and may vary depending on the installation situation. With any deviation to the standard setup, the specific values have to be checked and reviewed once installed or fitted!
For detailed information see http://www.ebmpapst.com/general conditions

ebmpapst

- **Technical features:** See electrical connections p. 255
- **EMC:** Interference emission acc. to EN 61000-6-3
  Interference immunity acc. to EN 61000-6-2
- **Cable exit:** Variabel
- **Protection class:** I
- **Product conforming to standards:** EN 60950-1
- **Approvals:** UL, CSA; Ⓐ (48 VDC) auch CCC

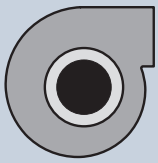

Centrifugal blowers without flange	Mass centrifugal blowers kg
D1G 133-AB29 -52	3,3
D1G 133-AB39 -52	3,3

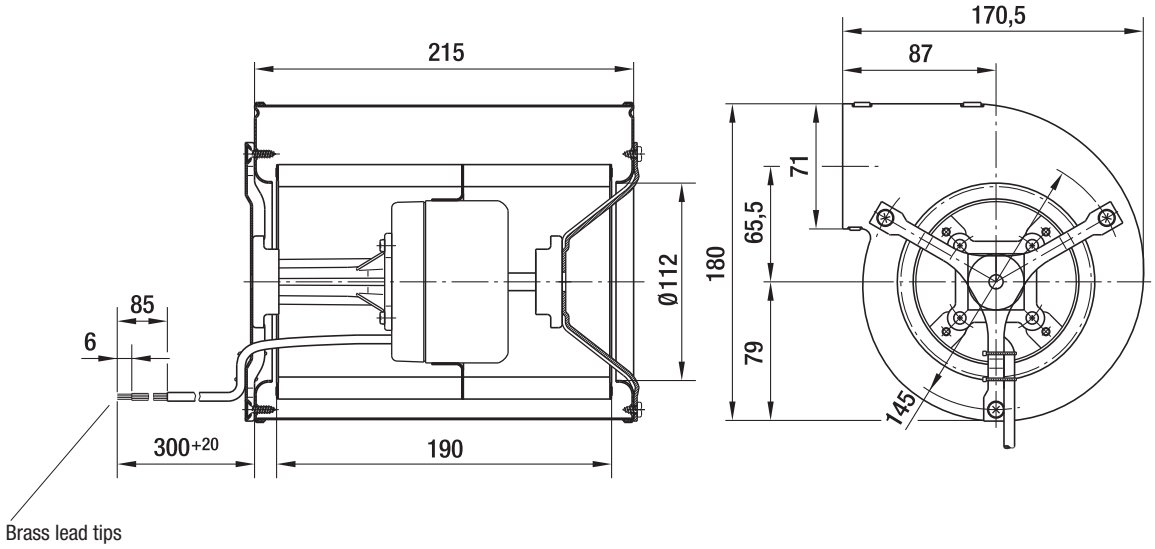

max. 1020 m³/h

DC Centrifugal blowers

Ø 133 mm

- **Material:** Housing: Galvanised sheet steel
  Impeller: Galvanised sheet steel
  Rotor: Coated in black
- **Direction of rotation:** Clockwise, seen on rotor
- **Type of protection:** IP 42
- **Insulation class:** "B"
- **Mounting position:** Any
- **Condensate discharges:** None
- **Operation mode:** Continuous operation (S1)
- **Design:** Standard external-rotor motor anti-vibration mounted on both sides
- **Bearings:** Maintenance-free ball bearings

Nominal data		Curve	Nominal voltage	Voltage range	Air flow	Speed / rpm	Input power	Current draw	Sound power level	Min. back-pressure	Perm. amb. temp.	Technical features and electrical connections
Type	**Motor**		**VDC**	**VDC**	**m³/h**	**rpm**	**W**	**A**	**dB(A)**	**Pa**	**°C**	
D1G 133	M1G 074-BF	A	24	16-28	1020	1580	118	6,00	64	0	-25...+60	p. 255 / G)
D1G 133	M1G 074-BF	A	48	36-57	1020	1580	118	3,00	64	0	-25...+60	p. 255 / G)

Subject to alternations

Curve:

U_N = nominal voltage (24 V /48 V)

U_R = overvoltage (28 V / 57 V)

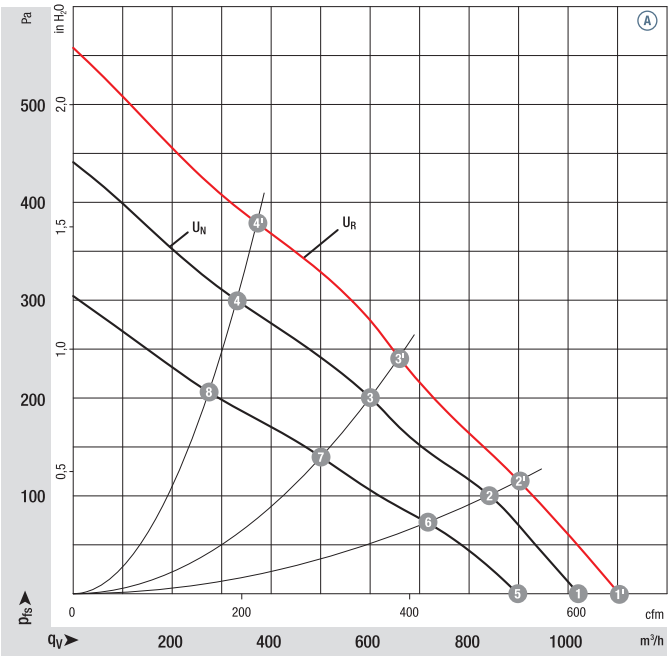

		n rpm	P_{ed} W	Lp_A dB(A)	η_{tL} %
A	1'	1700	145	65	—
A	2'	1930	133	62	38
A	3'	2290	122	59	41
A	4'	2700	99	61	32
A	1	1580	118	64	—
A	2	1790	107	61	38
A	3	2100	95	57	41
A	4	2410	73	58	32
A	5	1400	78	60	—
A	6	1580	70	56	38
A	7	1760	56	53	41
A	8	2000	44	53	32

Air performance measured as per: ISO 5801, Installation category A, with ebm-papst inlet nozzle without protection against accidental contact. Suction-side noise levels: LWA as per ISO 13347, LpA measured at 1 m distance to fan axis. The acoustic values given are only valid under the measurment conditions listed and may vary depending on the installation situation. With any deviation to the standard setup, the specific values have to be checked and reviewed once installed or fitted!
For detailed information see http://www.ebmpapst.com/general conditions

ebmpapst

- **Technical features:** See electrical connections p. 255
- **EMC:** Interference emission acc. to EN 61000-6-3
  Interference immunity acc. to EN 61000-6-2
- **Cable exit:** Variabel
- **Protection class:** I
- **Product conforming to standards:** EN 60950-1
- **Approvals:** UL, CSA

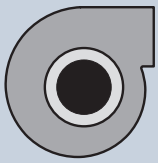

Centrifugal blowers without flange	Mass centrifugal blowers kg
D1G 133-DC13 -52	3,4
D1G 133-DC17 -52	3,4

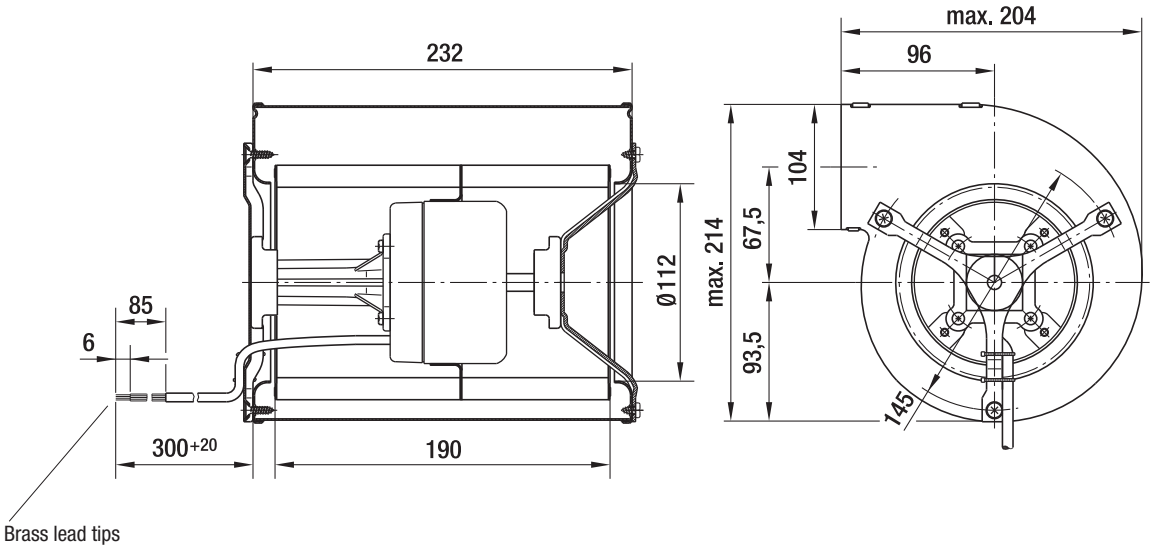

max. 1000 m³/h

DC Centrifugal blowers

Ø 146 mm

- **Material:** Housing: Galvanised sheet steel
  Impeller: Galvanised sheet steel
  Rotor: Coated in black
- **Direction of rotation:** Clockwise, seen on rotor
- **Type of protection:** IP 42
- **Insulation class:** "B"
- **Mounting position:** Any
- **Condensate discharges:** None
- **Operation mode:** Continuous operation (S1)
- **Design:** Standard external-rotor motor anti-vibration mounted on both sides
- **Bearings:** Maintenance-free ball bearings

Nominal data		Curve	Nominal voltage	Voltage range	Air flow	Speed / rpm	Input power	Current draw	Sound power level	Min. back-pressure	Perm. amb. temp.	Technical features and electrical connections
Type	**Motor**		**VDC**	**VDC**	**m³/h**	**rpm**	**W**	**A**	**dB(A)**	**Pa**	**°C**	
D1G 146	M1G 074-CF	A	24	16-28	1000	1350	105	5,10	61	0	-25...+60	p. 255 / G)
D1G 146	M1G 074-CF	A	48	36-57	1000	1350	105	2,60	61	0	-25...+60	p. 255 / G)

Subject to alternations

Curve:

U_N = nominal voltage (24 V /48 V)

U_R = overvoltage (28 V / 57 V)

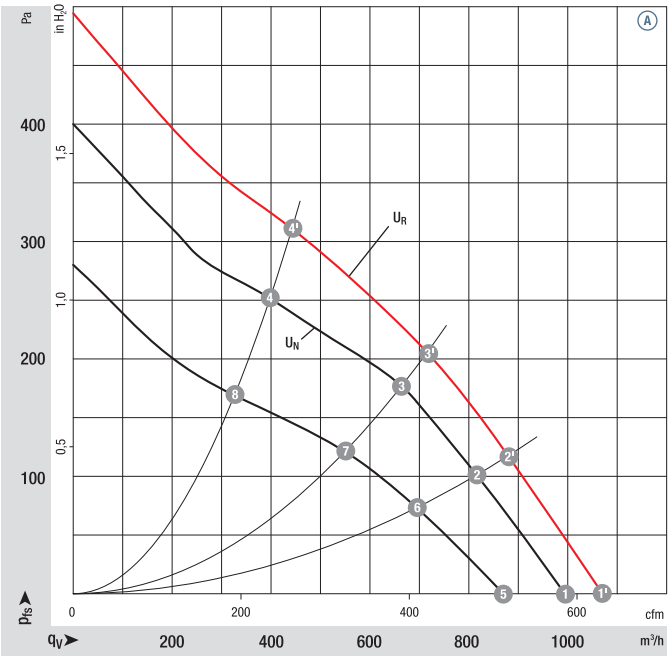

		n rpm	P_{ed} W	Lp_A dB(A)	η_{tL} %
A	1'	1460	129	63	—
A	2'	1680	119	60	53
A	3'	1890	111	58	61
A	4'	2240	95	59	55
A	1	1350	105	61	—
A	2	1570	95	58	53
A	3	1750	88	56	61
A	4	2010	70	57	55
A	5	1210	70	56	—
A	6	1360	60	54	53
A	7	1460	53	52	61
A	8	1670	42	51	55

Air performance measured as per: ISO 5801, Installation category A, with ebm-papst inlet nozzle without protection against accidental contact. Suction-side noise levels: LWA as per ISO 13347, LpA measured at 1 m distance to fan axis. The acoustic values given are only valid under the measurment conditions listed and may vary depending on the installation situation. With any deviation to the standard setup, the specific values have to be checked and reviewed once installed or fitted!
For detailed information see http://www.ebmpapst.com/general conditions

ebmpapst

- **Technical features:** See electrical connections p. 255
- **EMC:** Interference emission acc. to EN 61000-6-3
  Interference immunity acc. to EN 61000-6-2
- **Cable exit:** Variabel
- **Protection class:** I
- **Product conforming to standards:** EN 60950-1
- **Approvals:** UL, CSA

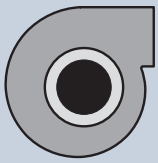

Centrifugal blowers without flange	Mass centrifugal blowers kg
D1G 146-AA19 -52	3,5
D1G 146-AA33 -52	3,5

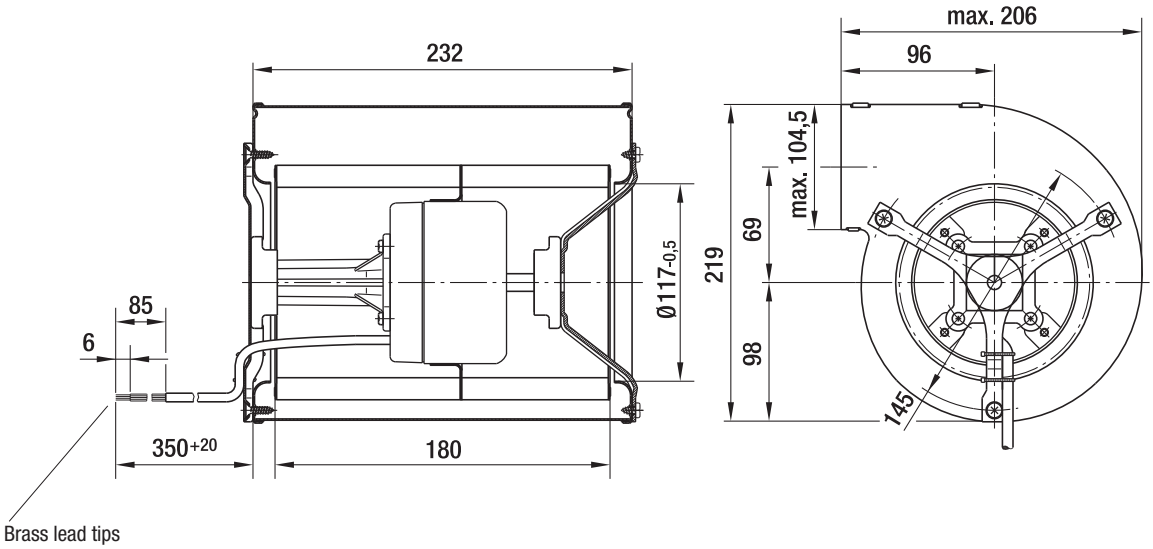

max. 980 m³/h

DC Centrifugal blowers

Ø 160 mm

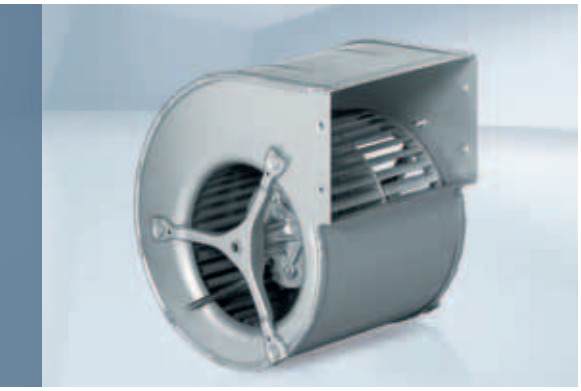

- **Material:** Housing: Galvanised sheet steel
  Impeller: Galvanised sheet steel
  Rotor: Coated in black
- **Direction of rotation:** Clockwise, seen on rotor
- **Type of protection:** IP 42
- **Insulation class:** "B"
- **Mounting position:** Any
- **Condensate discharges:** None
- **Operation mode:** Continuous operation (S1)
- **Design:** Standard external-rotor motor anti-vibration mounted on both sides
- **Bearings:** Maintenance-free ball bearings

Nominal data

Type	Motor	Curve	Nominal voltage VDC	Voltage range VDC	Air flow m³/h	Speed / rpm rpm	Input power W	Current draw A	Sound power level dB(A)	Min. back-pressure Pa	Perm. amb. temp. °C	Technical features and electrical connections
D1G 160	M1G 074-CF	A	24	16-28	980	1250	112	5,60	60	0	-25...+60	p. 255 / G)
D1G 160	M1G 074-CF	A	48	36-57	980	1250	112	2,90	60	0	-25...+60	p. 255 / G)

Subject to alternations

Curve:

U_N = nominal voltage (24 V /48 V)

U_R = overvoltage (28 V / 57 V)

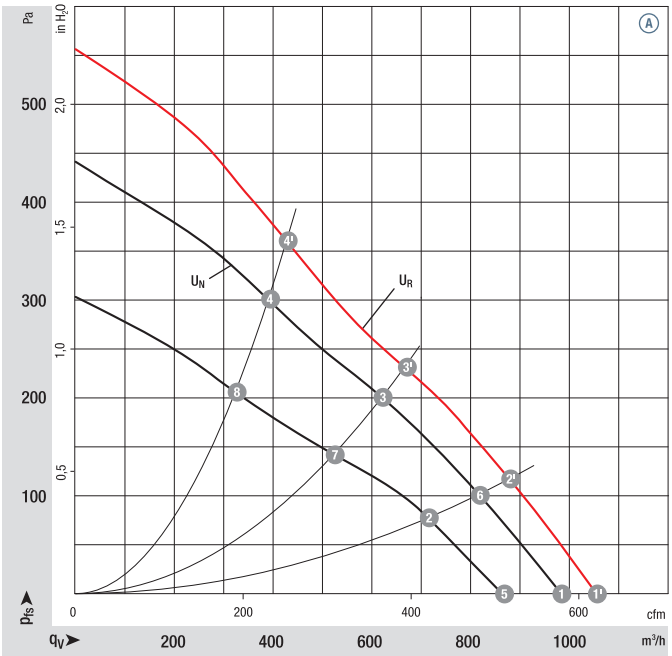

	n rpm	P_{ed} W	Lp_A dB(A)	η_{tL} %
A 1'	1330	142	63	—
A 2'	1520	128	61	64
A 3'	1790	115	59	66
A 4'	2090	105	60	60
A 1	1250	112	60	—
A 2	1420	102	59	64
A 3	1660	92	58	66
A 4	1900	80	58	60
A 5	1100	75	58	—
A 6	1250	69	56	64
A 7	1420	58	54	66
A 8	1580	47	53	60

Air performance measured as per: ISO 5801, Installation category A, with ebm-papst inlet nozzle without protection against accidental contact. Suction-side noise levels: LWA as per ISO 13347, LpA measured at 1 m distance to fan axis. The acoustic values given are only valid under the measurment conditions listed and may vary depending on the installation situation. With any deviation to the standard setup, the specific values have to be checked and reviewed once installed or fitted!
For detailed information see http://www.ebmpapst.com/general conditions

ebmpapst

- **Technical features:** See electrical connections p. 255
- **EMC:** Interference emission acc. to EN 61000-6-3
  Interference immunity acc. to EN 61000-6-2
- **Cable exit:** Variabel
- **Protection class:** I
- **Product conforming to standards:** EN 60950-1
- **Approvals:** UL, CSA

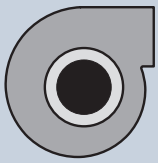

Centrifugal blowers without flange	Mass centrifugal blowers kg
D1G 160-DA19 -52	3,6
D1G 160-DA33 -52	3,6

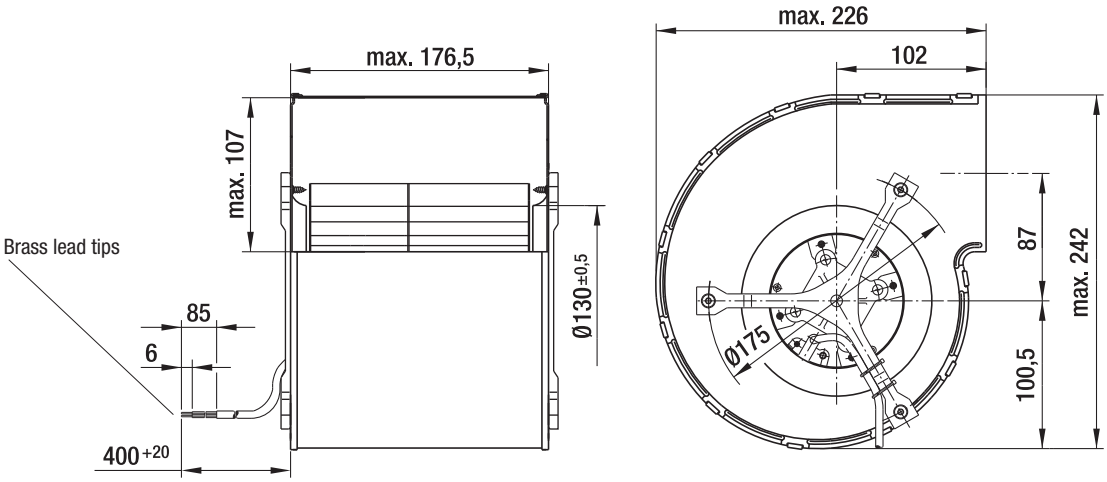

DC fans - specials

Speed signal	**164**
Alarm signal	**168**
Vario-Pro / Speed setting / Control input	**173**
Protection against ambient influences, Protection class IP 54 / IP 68	**177**

DC fans - specials

Technical information

Cooling capacity and efficiency
Greater power density, increasing miniaturisation and extreme electronic component density are posing increased demands on the cooling capacity and efficiency of fans. The intelligent and space-saving integration of the fan in the device configuration is therefore of major importance:

- Tailor-made cooling adapted to the situation as and when required.
- Programmable cooling by defining speed profiles.
- Transparency of function thanks to complete, interactive monitoring in all operating conditions.

Standard fans in electronics cooling have proven themselves millions of times.

With a constant speed and a correspondingly high noise level, they continuously provide the air flow needed for extreme cases. These extreme situations, however, occur extremely rarely, if at all, during the operating period. An intelligent fan is needed, which adapts automatically to the currently required level of cooling.

ebm-papst provides intelligent cooling concepts which are optimally adapted to requirements. For example:

1. Speed adjustment via temperature sensor
ebm-papst answers with a complete range of DC fans with temperature-controlled speed adjustment via a temperature sensor, available in a variety of standard dimensions.

Installation is very simple. The control electronics receive thermal information for the speed adjustment continuously and without losses, either externally via a freely designed and positionable strand, or internally directly in the fan hub in the air flow. A range of temperature sensors can be found on page 174.

2. DC fans with separate control input
Open or closed-loop speed control is also possible with DC fans that have a separate control input. A variation in speed can thus be implemented via a control voltage or a pulse-width modulated signal. These possibilities are used primarily in devices that have appropriate standard interfaces and thus require a load-dependent variation of the fans.

DC fans - specials

Technical information

3. Speed signal
DC fans with speed signal.
The integrated „electronic tachometer“ continuously provides an actual speed signal for external evaluation. The user is informed at all times of the current fan speed via an extremely simple signal evaluation on the customer side. The speed signal is via a separate lead.

4. Alarm signal
For applications which require monitored fan operation with alarm signal, ebm-papst has numerous alarm signal versions, either a static, pre-processed or interface-compatible high or low continuous signal depending on the type of fan.

5. Turbo drives
Fans with three-phase EC drives and microprocessor-controlled motor electronics. These three-phase motors whose torque is virtually non-reliant on the rotor position are used for extremely high running smoothness. The speed of these fans can be controlled over a very wide range with PWM, analogue voltage or temperature. Optionally, the fans can be supplied with reversible direction of rotation and active brake operation.

6. Vario-Pro fans
This high-end fan concept by ebmpapst with programmed intelligence and customer-specific integrated functions makes your electronics cooling even more versatile and competitive. Vario-Pro ensures a fresh economic breeze for all demanding cooling tasks – e.g. where greater reliability, more flexibility and intelligent function features such as alarm function, speed control etc. are required.

The successful concept of Vario-Pro is: Tailor-made software instead of fixed hardware, because programmed software modules for motor control and application intelligence are responsible for the work that analogue components were responsible for in the past. This central control unit of the Vario-Pro comprises a microcontroller and an EEPROM, on which all characteristics are stored.

7. Protection against environmental influences
Some applications place particular demands on the fans resistance to ambient influences, such as dust, moisture, water and salt. ebm-papst offer solutions for adapting fans to these ambient conditions.

Speed signal /2

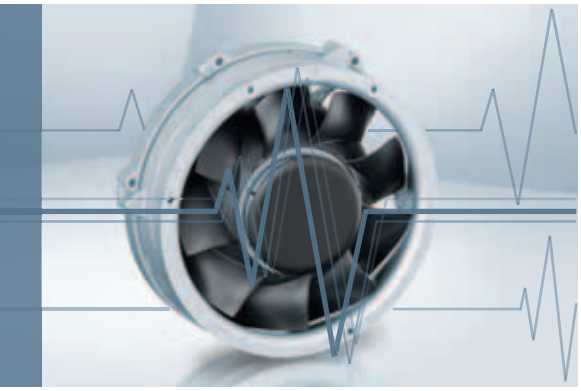

- Speed-proportional rectangular pulse for external speed monitoring of fan motor
- 2, 3 or 6 pulses per revolution
- Open collector signal output
- Extremely wide operating voltage range
- Easy adaptation to user interface
- Connection via separate lead
- The sensor signal also serves as a major comparison variable for setting and maintaining the setpoint speed for interactive or controlled cooling with one or several interconnected fans.

Electrical connection

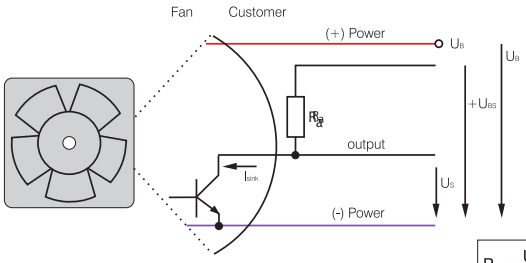

$$R_a = \frac{U_{BS} - U_{SLow}}{I_{SINK}}$$

All voltages measured to ground.
External load resistor R_a / U_S / U_{BS} required.

Signal output voltage
Standard signal for all models (exceptions see below)

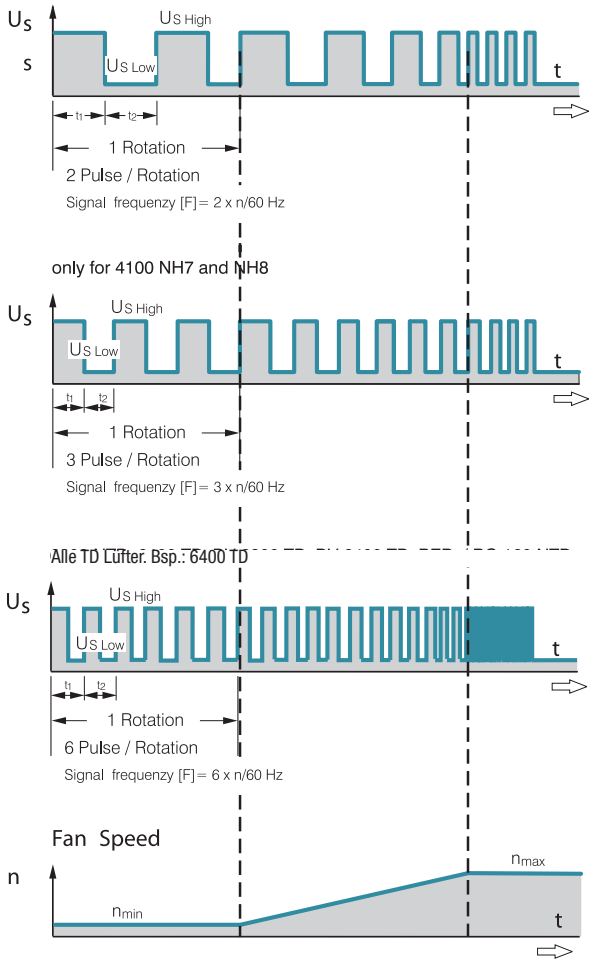

Signal data	Speed signal U_S Low	Condition: I_{sink}	Speed signal U_S High	Condition: I_{source}	Sensor operating voltage U_{BS} max.	Perm. sink current I_{sink} max.	Pulses per revolution	Fan description Basic type
Type	**VDC**	**mA**	**VDC**	**mA**	**VDC**	**mA**		**Page**
250	≤ 0,4	2	≤ 30	0	30	2	2	31
400 F	≤ 0,4	1	≤ 30	0	30	2	2	32
400	≤ 0,4	1	≤ 30	0	30	2	2	33
420 J	≤ 0,4	2	≤ 15	0	15	4	2	34
500 F	≤ 0,4	1	≤ 30	0	30	2	2	35
600 F	≤ 0,4	1	≤ 30	0	30	2	2	36
620	≤ 0,4	2	≤ 30	0	30	4	2	37
630 U	≤ 0,4	2	≤ 30	0	30	4	2	38
600 N	≤ 0,4	2	≤ 28	0	28	4	2	39
600 J	≤ 0,4	2	≤ 30	0	30	4	2	41
700 F	≤ 0,4	2	≤ 30	0	30	4	2	42
8450	≤ 0,4	2	≤ 28	0	28	4	2	43
8400 N	≤ 0,4	2	≤ 28	0	28	4	2	44
8400 N VARIOFAN	≤ 0,4	2	≤ 30	0	30	4	2	45
8300	≤ 0,4	2	≤ 30	0	30	4	2	46
8200 J	≤ 0,4	2	≤ 30	0	30	4	2	47
3400 N	≤ 0,4	2	≤ 28	0	28	4	2	48
3400 N VARIOFAN	≤ 0,4	2	≤ 30	0	30	4	2	49
3300	≤ 0,4	2	≤ 30	0	30	4	2	50
3300 N	≤ 0,4	2	≤ 30	0	30	4	2	51
3212 J / 3214 J	≤ 0,4	2	≤ 30	0	30	4	2	52
3218 J	≤ 0,4	2	≤ 60	0	60	4	2	52
3250 J	≤ 0,4	2	≤ 60	0	60	4	3	53
4412 F / 4414 F	≤ 0,4	2	≤ 30	0	30	4	2	54
4418 F	≤ 0,4	2	≤ 60	0	60	4	2	54
4400 FN	≤ 0,4	2	≤ 30	0	30	4	2	55
4312 / 4314	≤ 0,4	2	≤ 30	0	30	4	2	56
4318	≤ 0,4	2	≤ 60	0	60	4	2	56
4312 / 4314 VARIOFAN	≤ 0,4	2	≤ 30	0	30	4	2	57
4318 VARIOFAN	≤ 0,4	2	≤ 60	0	60	4	2	57
4400	≤ 0,4	2	≤ 30	0	30	4	2	58/59
4100 N	≤ 0,4	2	≤ 30	0	30	4	2	60
4100 NHH...NH6	≤ 0,4	2	≤ 60	0	60	10	2	61
4100 NH7...NH8	≤ 0,4	2	≤ 60	0	60	20	3	62
DV 4100	≤ 0,4	2	≤ 30	0	30	4	2	63

Subject to alternations

Available on request:
- Electrically isolated sensor and signal circuit
- Varying voltage potentials for power and logic circuit

Signal data	Speed signal U_S Low	Condition: I_{sink}	Speed signal U_S High	Condition: I_{source}	Sensor operating voltage U_{BS} max.	Perm. sink current I_{sink} max.	Pulses per revolution	Fan description Basic type
Type	**VDC**	**mA**	**VDC**	**mA**	**VDC**	**mA**		**Page**
5200 N	≤ 0,4	2	≤ 30	0	30	4	2	64
DV 5200	≤ 0,4	2	≤ 30	0	30	4	2	65
5112 N	≤ 0,4	2	≤ 15	0	5	20	2	66
5114 N / 5118 N	≤ 0,4	2	≤ 60	0	60	20	2	66
5300	≤ 0,4	2	≤ 72	0	72	4	2	67
5300 TD	≤ 0,4	2	≤ 72	0	72	20	6	68
7112 N / 7118 N	≤ 0,4	2	≤ 60	0	60	20	2	69
7114 N	≤ 0,4	2	≤ 30	0	30	20	2	69
7200 N	≤ 0,4	2	≤ 15	0	15	20	2	70
6300	≤ 0,4	2	≤ 72	0	72	20	2	72
6300 TD	≤ 0,4	2	≤ 72	0	72	20	6	73/74
DV 6300	≤ 0,4	2	≤ 72	0	72	20	6	75
6400	≤ 0,4	2	≤ 60	0	60	20	2	76
2200 FTD	≤ 0,4	2	≤ 72	0	72	20	6	80
RL 48	≤ 0,4	2	≤ 30	0	30	4	2	95
RL 65	≤ 0,4	2	≤ 30	0	30	4	2	96
RL 90 N	≤ 0,4	2	≤ 30	0	30	4	2	97
RLF 100	≤ 0,4	2	≤ 30	0	30	4	2	98
RG 90 N	≤ 0,4	2	≤ 30	0	30	4	2	99
RG 125 N	≤ 0,4	2	≤ 30	0	30	4	2	100
RG 160 N	≤ 0,4	2	≤ 30	0	30	20	2	101
RG 160 NTD	≤ 0,4	2	≤ 60	0	60	20	6	102
RG 190 TD	≤ 0,4	2	≤ 72	0	72	20	6	103
RG 220 TD	≤ 0,4	2	≤ 72	0	72	20	6	104
RG 225 TD	≤ 0,4	2	≤ 72	0	72	20	6	105
RET 97 TD	≤ 0,4	2	≤ 72	0	72	20	6	106
REF 100	≤ 0,4	2	≤ 30	0	30	4	2	107
RER 120 TD	≤ 0,4	2	≤ 72	0	72	20	6	109
RER 133 TD	≤ 0,4	2	≤ 72	0	72	20	6	113
RER 160 NTD	≤ 0,4	2	≤ 60	0	60	20	6	115
REF 175 TD	≤ 0,4	2	≤ 72	0	72	20	6	116
RER 175 TD	≤ 0,4	2	≤ 72	0	72	20	6	117
RER 190 TD	≤ 0,4	2	≤ 72	0	72	20	6	118
RER 220 TD	≤ 0,4	2	≤ 72	0	72	20	6	124
RER 225 TD	≤ 0,4	2	≤ 72	0	72	20	6	125

Subject to alternations

Note:
With these fan options, deviations in regard to temperature range, voltage range and power consumption are possible compared with standard fan data.

Speed signal /12

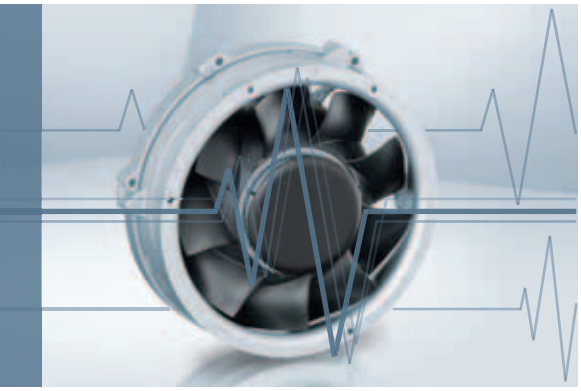

- Speed-proportional rectangular pulse for external speed monitoring of fan motor
- 2, 3 or 6 pulses per revolution
- TTL-compatible
- Integrated pull-up resistor
- Connection via separate lead
- The sensor signal also serves as a major comparison variable for setting and maintaining the setpoint speed for interactive or controlled cooling with one or more interconnected fans.

Electrical connection

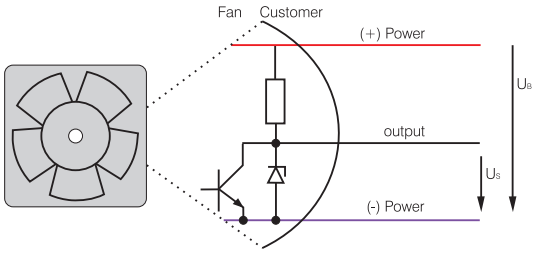

All voltages measured to ground.

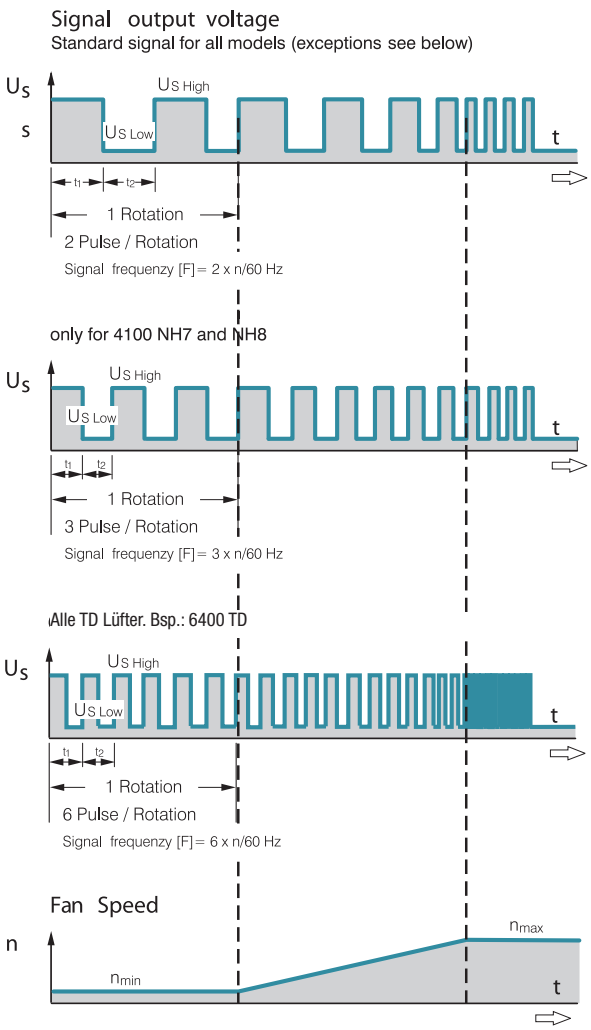

Signal data	Speed signal U_S Low	Condition: I_{sink}	Speed signal U_S High	Condition: I_{source}	Perm. sink current I_{sink} max.	Fan description Basic type
Type	**VDC**	**mA**	**VDC**	**mA**	**mA**	**Page**
614 N/12 GM	≤ 0,4	1	2,5–5,5	1	1	39
618 N/12 N	≤ 0,4	1	2,5–5,5	1	1	39
8412 N/12 H	≤ 0,4	1	2,5–5,5	1	1	44
4412 F/12 GM	≤ 0,4	1	2,5–5,5	1	1	54
4418 F/12	≤ 0,4	1	2,5–5,5	1	1	54
4312 /12 M	≤ 0,4	1	2,5–5,5	1	1	56
4314 /12	≤ 0,4	1	2,5–5,5	1	1	56
4182 N/12 X	≤ 0,4	1	2,5–5,5	1	1	60

Subject to alternations

Note:
With these fan options, deviations in regard to temperature range, voltage range and power consumption are possible compared with standard fan data.

ebmpapst

Available on request:
- Electrically isolated sensor and signal circuit
- Varying voltage potentials for power and logic circuit

Signal data	Speed signal U_S Low	Condition: I_{sink}	Speed signal U_S High	Condition: I_{source}	Perm. sink current I_{sink} max.	Fan description Basic type
Type	**VDC**	**mA**	**VDC**	**mA**	**mA**	**Page**
7214 N/12	≤ 0,4	2	2,5–5,5	1	≤ 20	70
6424/12 H	≤ 0,4	2	2,5–5,5	1	≤ 20	76
DV 6424/12	≤ 0,4	2	4,5–5,25	2	≤ 12	78
DV 6448/12	≤ 0,4	2	4,5–5,25	2	≤ 12	78
RG 125-19/12 N/12	≤ 0,4	1	2,5–5,5	1	≤ 1	100
RG 160-28/12 N/12	≤ 0,4	2	2,5–5,5	1	≤ 5	101
RG 160-28/18 N/12	≤ 0,4	2	2,5–5,5	1	≤ 20	101
RER 125-19/12 N/12	≤ 0,4	1	2,5–5,5	1	≤ 1	112
RER 160-28/12 N/12	≤ 0,4	2	2,5–5,5	1	≤ 5	114
RER 160-28/18 N/12	≤ 0,4	2	2,5–5,5	1	≤ 20	114

Subject to alternations

Note:
With these fan options, deviations in regard to temperature range, voltage range and power consumption are possible compared with standard fan data.

Alarm signal /17

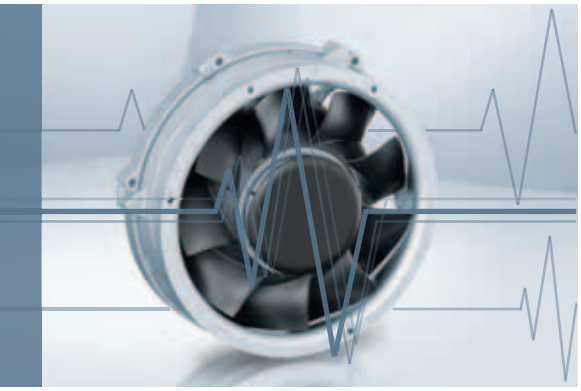

- Alarm signal for speed monitoring
- Signal output via open collector
- The fan emits a high continuous signal during trouble-free operation within the permissible voltage range.
- Low signal when speed limit is not reached
- After elimination of fault, the fan returns to its setpoint speed; the alarm signal reverts to high.

Alarm signal data	Alarm output voltage $U_{A\,Low}$	Condition:	Condition: I_{sink} =	Alarm output-voltage $U_{A\,High}$	Condition:	Condition: I_{source}	Alarm operating-voltage $U_{BA\,max.}$	Max. permissible Sink current	Alarm delay time t_2	Condition:	Speed limit n_G	Fan description Basic type
Type	**VDC**		**mA**	**VDC**		**mA**	**VDC**	**mA**	**s**		**RPM**	**Page**
8318 /17	≤ 0,4	n < nG	2	≤ 60	n > nG	0	60	20	≤ 15	*	1500 ± 100	46
8318 /17 H	≤ 0,4	n < nG	2	≤ 60	n > nG	0	60	20	≤ 15	*	1500 ± 100	46
3314 /17	≤ 0,4	n < nG	2	≤ 60	n > nG	0	60	20	≤ 15	*	1500 ± 100	50
4318 /17	≤ 0,4	n < nG	2	≤ 60	n > nG	0	60	20	≤ 15	*	850 ± 100	56
4184 N /17 X	≤ 0,4	n < nG	2	≤ 60	n > nG	0	60	20	≤ 15	*	1500 ± 100	60

Subject to alternations

Note:
With these fan specials, deviations as regards temperature range, voltage range and power consumption are possible compared with standard fans.

Electrical connection

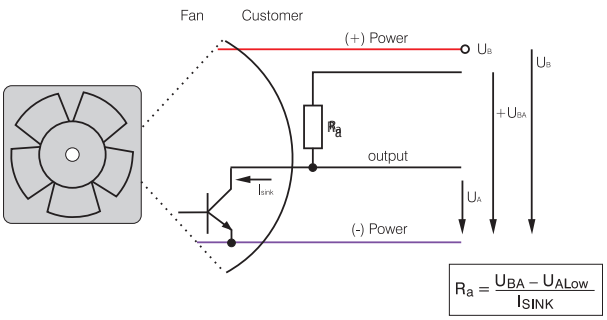

All voltages measured to ground.
External load resistor R_a from U_A to U_{BA} required.

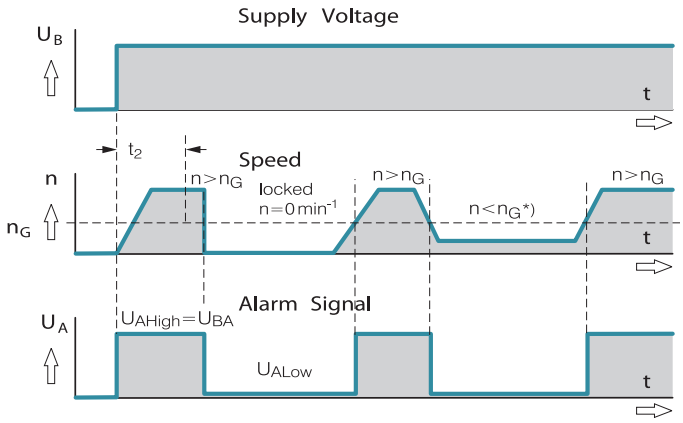

t_2 = Alarm signal suppression during start-up
* n < speed limit n_G by braking or locking.

ebmpapst

Available on request:

- With integrated signal latching for subsequent recognition of short-time faults
- Alarm circuit open collector or TTL
- Electrically isolated for maximum device safety
  Defects in the power circuit do not affect the alarm circuit.

Alarm signal data	Alarm output voltage $U_{A\ Low}$	Condition:	Condition: I_{sink} =	Alarm output-voltage $U_{A\ High}$	Condition:	Condition: I_{source}	Alarm operating-voltage $U_{BA\ max.}$	Max. permissible Sink current	Alarm delay time t_2	Condition:	Speed limit n_G	Fan description Basic type
Type	**VDC**		**mA**	**VDC**		**mA**	**VDC**	**mA**	**s**		**RPM**	**Page**
4312/17 MT VARIOFAN	≤ 0,4	n < nG	2	≤ 60	n > nG	0	60	20	≤ 15	*	1500 ± 100	57
4312/17 T VARIOFAN	≤ 0,4	n < nG	2	≤ 60	n > nG	0	60	20	≤ 15	*	1500 ± 100	57
4314/17 T VARIOFAN	≤ 0,4	n < nG	2	≤ 60	n > nG	0	60	20	≤ 15	*	1150 ± 100	57
4318/17 T VARIOFAN	≤ 0,4	n < nG	2	≤ 60	n > nG	0	60	20	≤ 15	*	850 ± 100	57
7214 N/17	≤ 0,4	n < nG	2	≤ 60	n > nG	0	60	15	≤ 15	*	1330 ± 60	70

Subject to alternations

* After switching on U_B

Note:
With these fan specials, deviations as regards temperature range,
voltage range and power consumption are possible compared with standard fans.

Alarm signal /19

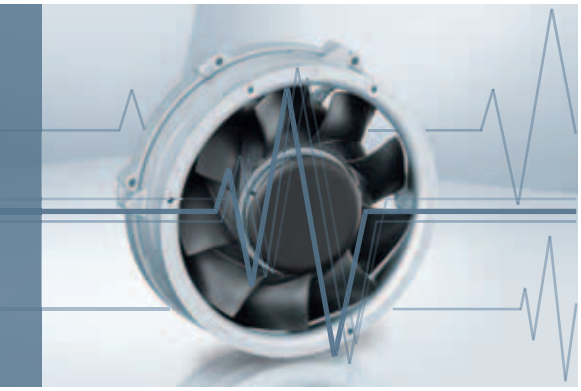

- Alarm signal for speed monitoring
- Signal output via open collector
- The fan emits a low continuous signal during trouble-free operation within the permissible voltage range.
- High signal when speed limit is not reached
- After elimination of fault, the fan returns to its setpoint speed; the alarm signal reverts to low.

Alarm signal data	Alarm output voltage $U_{A\,Low}$	Condition:	Condition: I_{sink} =	Alarm output-voltage $U_{A\,High}$	Condition:	Condition: I_{source}	Alarm operating-voltage $U_{BA\,max.}$	Max. permissible Sink current	Alarm delay time t_2	Condition:	Speed limit n_G	Fan description Basic type
Type	**VDC**		**mA**	**VDC**		**mA**	**VDC**	**mA**	**s**		**RPM**	**Page**
8314/19 H	≤ 0,4	n > nG	2	≤ 60	n < nG	0	60	20	≤ 15	*	1500 ± 100	46
4312/19	≤ 0,4	n > nG	2	≤ 60	n < nG	0	60	20	≤ 15	*	1500 ± 100	56
7214 N/19	≤ 0,4	n > nG	2	≤ 60	n < nG	0	60	10	10 ± 4	*	1800 ± 20	70
RLF 100-11/14/19	≤ 0,4	n > nG	2	≤ 28	n < nG	0	28	10	10 ± 4	*	1900 ± 100	98
RER 101-36/18N/19 HH	≤ 0,4	n > nG	2	≤ 28	n < nG	0	28	10	10 ± 4	*	1900 ± 100	108

Subject to alternations

* After switching on U_B

Note:
With these fan specials, deviations as regards temperature range, voltage range and power consumption are possible compared with standard fans.

Available on request:
- With integrated signal latching for subsequent recognition of short-term faults.
- Alarm circuit open collector or TTL.
- Electrically isolated for max. device safety; defects in power circuit have no effect on the alarm circuit.

Electrical connection

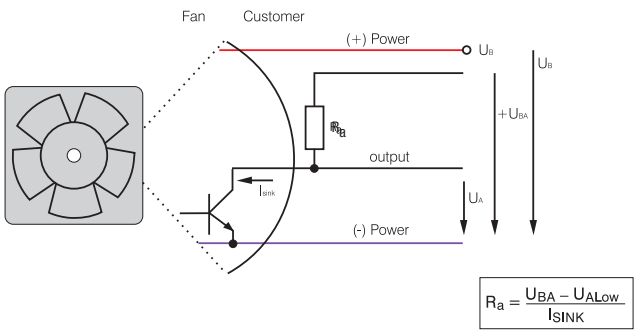

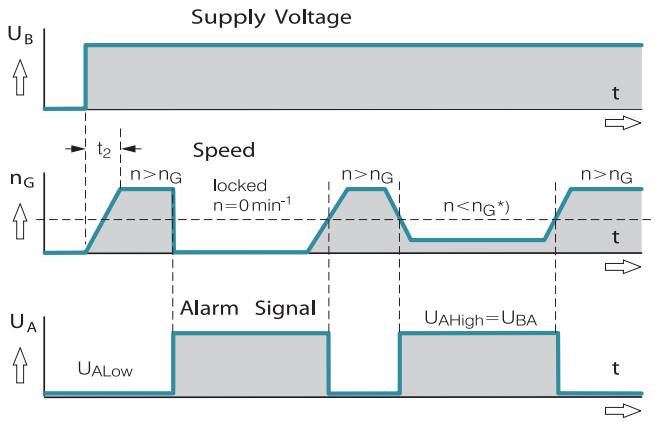

All voltages measured to ground.
External load resistor R_a from U_A to U_{BA} required.

t_2 = Alarm signal suppression during start-up.
* n < Speed limit n_G by braking or locking.

ebmpapst

Alarm signal /37

Go / No-go alarm

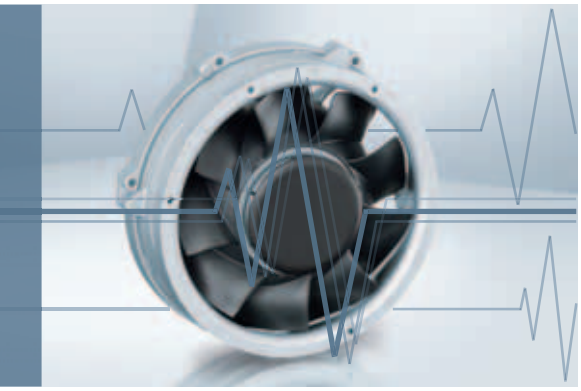

- Alarm signal for speed monitoring
- Signal output via open collector
- The fan emits a high continuous signal during trouble-free operation within the permissible voltage range.
- Low signal when speed limit is not reached
- After elimination of fault, the fan returns to its setpoint speed; the alarm signal reverts to high.

Alarm signal data	Alarm output voltage $U_{A\ Low}$	Condition:	Condition: I_{sink} =	Alarm output-voltage $U_{A\ High}$	Condition:	Condition: I_{source}	Alarm operating-voltage U_{BA} max.	Max. permissible Sink current	Alarm delay time t_2	Condition:	Speed limit n_G	Fan description Basic type
Type	**VDC**		**mA**	**VDC**		**mA**	**VDC**	**mA**	**s**		**RPM**	**Page**
8412 N/37 GMLV	≤ 0,4	n ≤ nG	2	≤ 28	n > nG	0	28	10	<1	*	0	45
3412 N/37 GV	≤ 0,4	n ≤ nG	2	≤ 28	n > nG	0	28	10	<1	*	0	49

Subject to alternations

* After switching on U_B

Note:
With these fan specials, deviations as regards temperature range, voltage range and power consumption are possible compared with standard fans.

Available on request:
- Alarm circuit TTL compatible.

Electrical connection

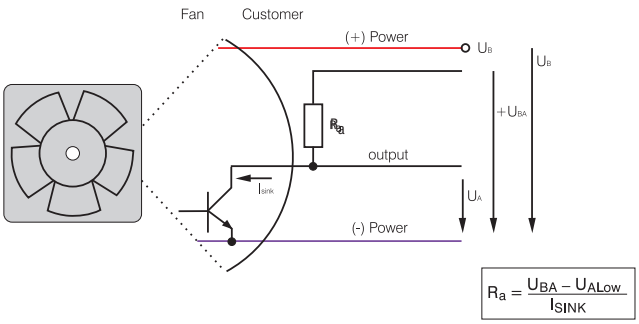

All voltages measured to ground.
External load resistor R_a from U_A to U_{BA} required.

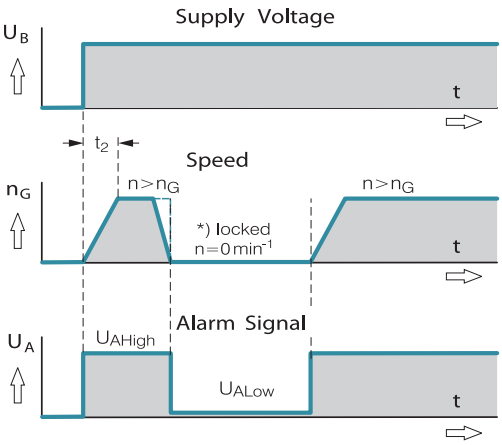

t_2 = Alarm signal suppression during start-up.
* n < Speed limit n_G by braking or locking.

Alarm signal /39

Go / No-go alarm

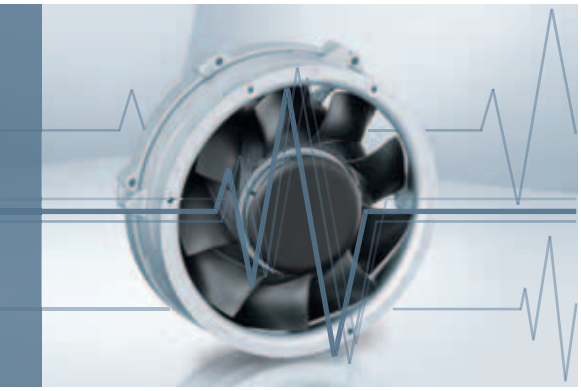

- Alarm signal for speed monitoring
- Signal output via open collector
- The fan emits a low continuous signal during trouble-free operation within the permissible voltage range.
- High signal when speed limit is not reached
- After elimination of fault, the fan returns to its setpoint speed; the alarm signal reverts to low.

Alarm signal data	Alarm output voltage $U_{A\ Low}$	Condition:	Condition: I_{sink} =	Alarm output-voltage $U_{A\ High}$	Condition:	Condition: I_{source}	Alarm operating-voltage $U_{BA\ max.}$	Max. permissible Sink current	Alarm delay time t_2	Condition:	Speed limit n_G	Fan description Basic type
Type	**VDC**		**mA**	**VDC**		**mA**	**VDC**	**mA**	**s**		**RPM**	**Page**
412/39	≤ 0,5	n > nG	2	≤ 28	n = nG	0	28	10	<1	*	0	33
612 F/39 H	≤ 0,5	n > nG	2	≤ 28	n = nG	0	28	10	<1	*	0	36
614 N/39 M	≤ 0,5	n > nG	2	≤ 28	n = nG	0	28	10	<1	*	0	39
618 N/39 N	≤ 0,5	n > nG	2	≤ 28	n = nG	0	28	10	<1	*	0	39
3412 N/39 H	≤ 0,5	n > nG	2	≤ 28	n = nG	0	28	10	<1	*	0	48
3414 N/39 HH	≤ 0,5	n > nG	2	≤ 28	n = nG	0	28	10	<1	*	0	48
4412 F/39 GL	≤ 0,5	n > nG	2	≤ 28	n = nG	0	28	10	<1	*	0	54
4412 F/39 M	≤ 0,5	n > nG	2	≤ 28	n = nG	0	28	10	<1	*	0	54
4414 F/39	≤ 0,5	n > nG	2	≤ 28	n = nG	0	28	10	<1	*	0	54
4414 FN/39 H	≤ 0,4	n > nG	2	≤ 30	n = nG	0	30	4	<1	*	0	55

Subject to alternations

* After switching on U_B

Note:
With these fan specials, deviations as regards temperature range, voltage range and power consumption are possible compared with standard fans.

Electrical connection

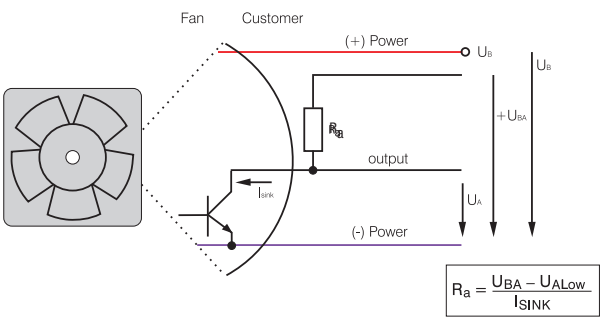

All voltages measured to ground
External load resistor Ra from U_A to U_{BA} required.

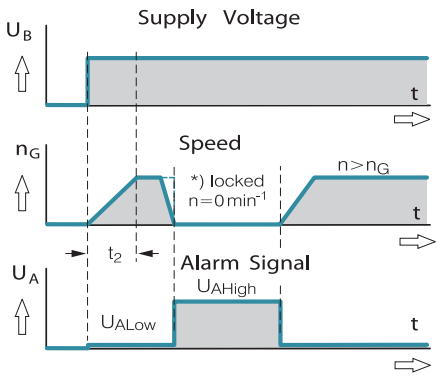

t_2 = Alarm signal suppression during start-up
* n < Speed limit n_G by braking or locking

ebmpapst

Vario-Pro®

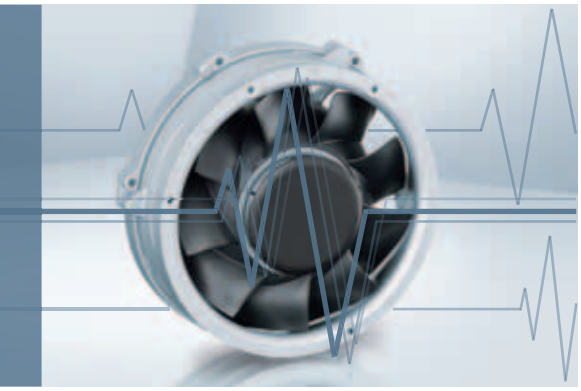

– ”Software instead of hardware“ – aptly describes the unique fan concept, equipped at the plant with tailor-made intelligence for cooling electronics.
– Flexible configuration using software, allows quicker availability, sampling from the factory and the ability to supply customer-specific solutions in any quantity.

Vario-Pro-Features

External Speed setting

– Speed setting via temperature, PWM or analogue control voltage
  See page 174 (Speed setting)
– Description of speed curve with up to 14 selectable interpolation points
  Linear interpolation between the points
– Zero speed possible
– Recognition of sensor failure: In case of loss of sensor, the fan operates at programmable (fail-safe) speed.

Alarm and tachometer functions

– Optional alarm and/or tachometer function
– Selectable alarm speed limit (with hysteresis) and alarm delay time
– Latching of alarm signal
– Delay only when starting or permanently active
– ”High“ or ”Low“ output signal in case of alarm
– Optional alarm if temperature sensor fails
– Optional alarm in case of excess temperature

Motor management

– High control accuracy due to digital motor management
– Higher operating efficiency due to optimum adaptation of motor hardware and software

Fan series	Page
620	37
8400 N	44
8300	46
8200 J	47
3400 N	48
3300	50
3300 N	51
3200 J	52
3250 J	53
4400 FN	55
4300	56
4100 N	60

Fan series	Page
4100 NH...NH6	61
4100 NH 7-8	62
DV 4100	63
5200 N	64
DV 5200	65
5100 N	66
5300	67
7100 N	69
7200 N	70
6100 N	71
6300	72
DV 6300	75

Fan series	Page
6400	76
DV 6400	78
RL 90 N	97
RLF 100	98
RG 90 N	99
RG 125 N	100
RG 160 N	101
REF 100	107
RER 101	108
RER 125 N	112
RER 160 N	114

Speed setting via temperature sensor

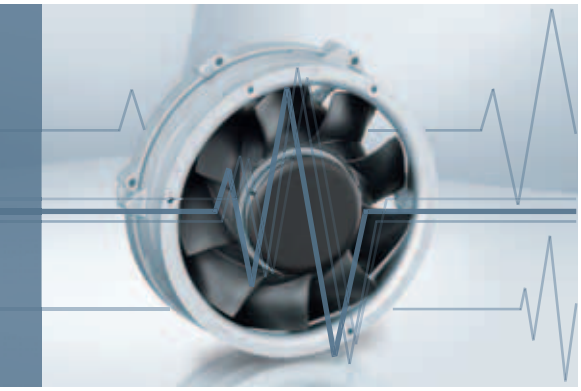

– The control variable is a temperature sensor which is either integrated into the fan or connected to an additional control wire.

External temperature sensor Type T

– Ext. NTC type LZ370 (p. 253) is required (to be ordered seperatly)

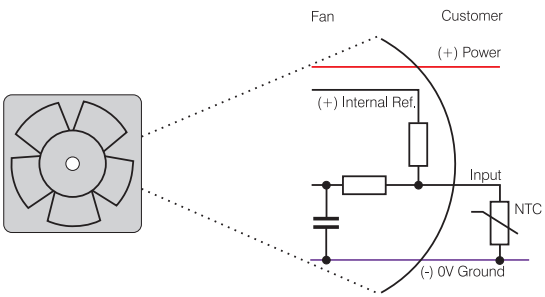

Internal temperature sensor Type I

– NTC integrated into the fan hub

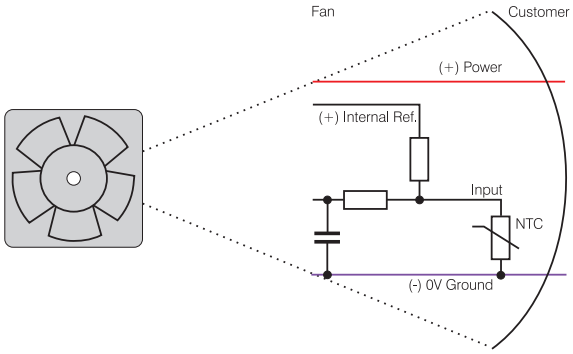

Standard speed-temperature curve for type T and type I

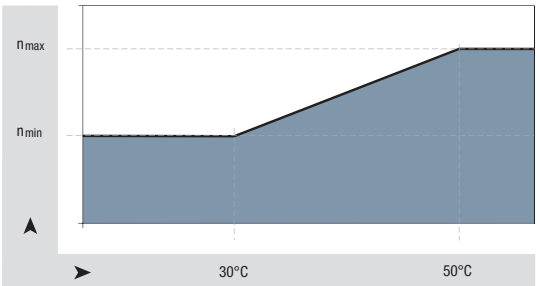

$n_{min} \approx {}^{1}/_{2}\, n_{max}$
$T_{min} \approx 30\ °C;\ T_{max} = 50\ °C$

Optionally available with customer specific temperature-speed control curve

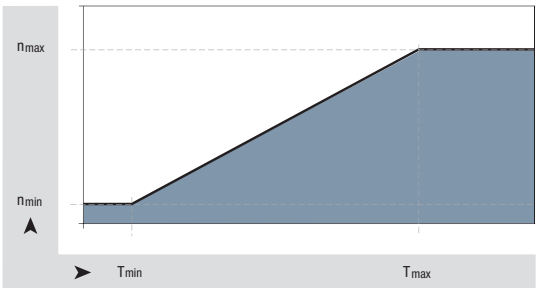

$n_{min} \approx 800\ {}^{1}/_{min}$ n_{max} model-dependent
$T_{min} \approx 5\ °C$ $T_{max} \leq 85\ °C$, model-dependent

Speed setting with control voltage or PWM

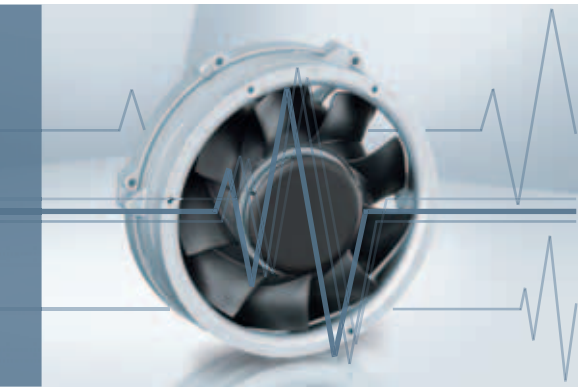

– The control variable is a PWM signal or analogue control voltage.

Speed setting via control voltage Type A

– Standard control range 0 ... 10 V

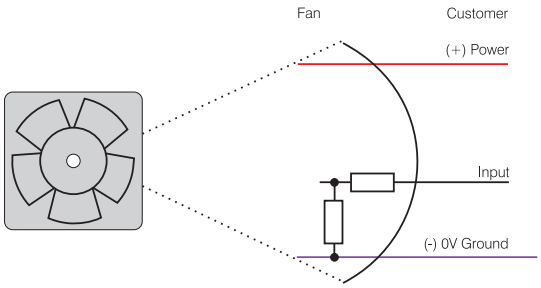

Typical input resistance >10 kΩ

Drehzahlvorgabe mittels PWM Typ P

– Standard PWM signal in two versions
  a) PWM frequency, mainly 1– 10 kHz (0–100%), Open collector input
  b) Four-wire interface in accordance with Intel specifications for 12 VDC fans, PWM frequency 25 kHz, incl. speed signal /2

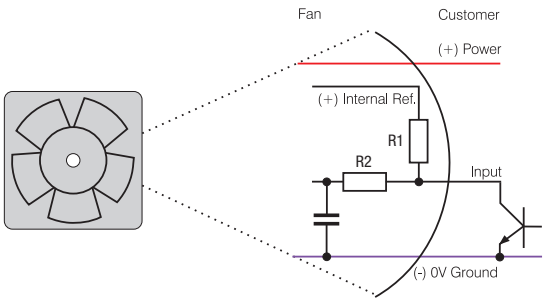

– Optional with potentiometer

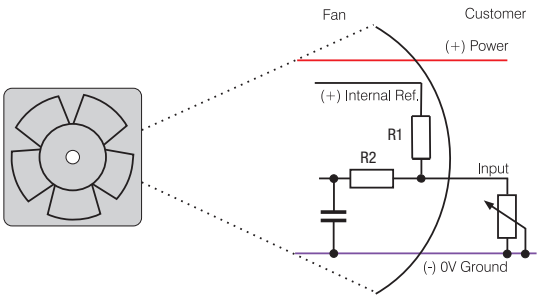

Internal reference = +5V
R1 typical 4.7...10 kΩ
R2 typical 100 kΩ

Standard curve P / A

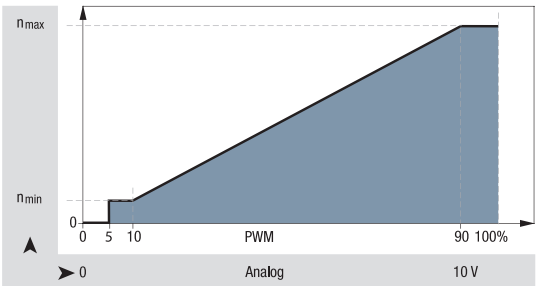

Optionally available with customer specific P / A speed control curve

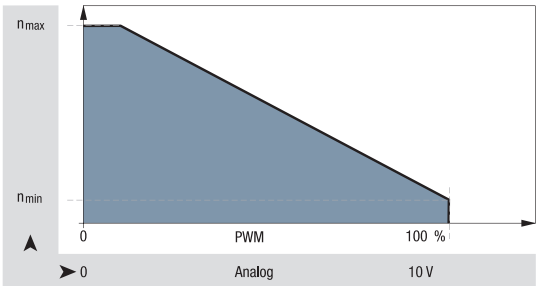

Speed setting via multi-option control input

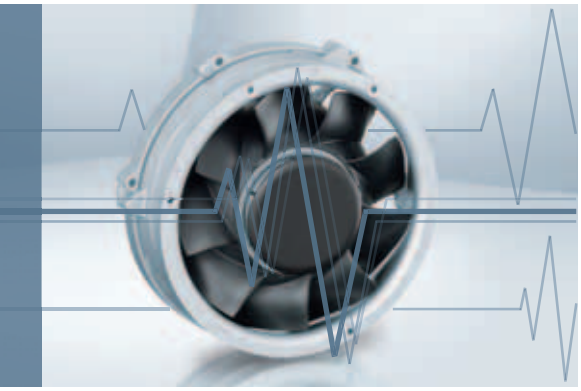

- Customer can operate input either with PWM signal, analogue voltage, external temperature control module or resistor.
- The control signal-speed characteristics of the fan differ from the standard curve of the A and P inputs (see p. 175).
- To attain the maximum speed, the control wire must be switched against UB.
- The control input is usually combined with an open collector tachometer (Type /2, see page 164).

Speed setting via multi-option control input

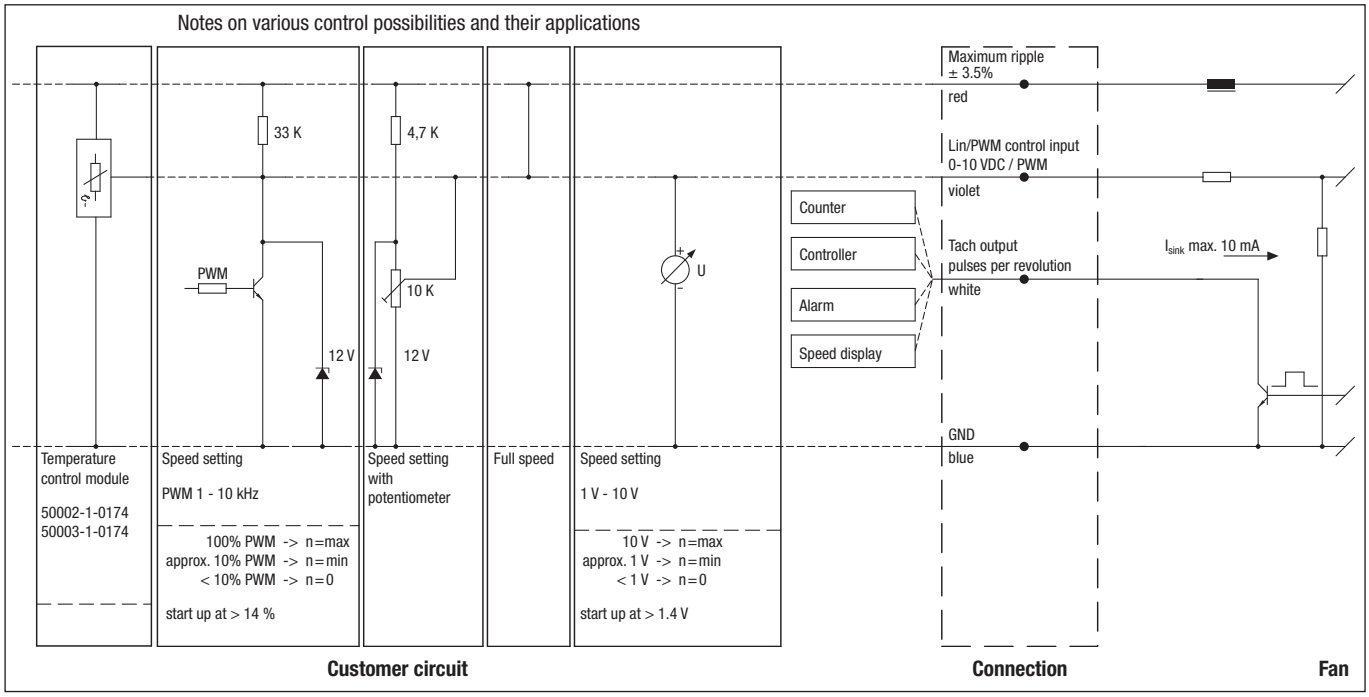

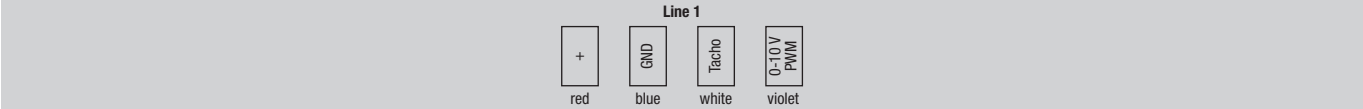

Line	Connection	Colour	Assignment / function
1	+	red	Maximum ripple ± 3.5 %
	GND	blue	GND

Line	Connection	Colour	Assignment / function
1	Tach	white	Tach output:
			3 pulses / revolution
	0-10 V / PWM	violet	Control input (Impedance 100 kΩ)

ebmpapst

Protected fans

against environmental influences

– Capable to fulfil special requirements for a broad range of applications
– Resistant to environmental influences, such as dust, splash water, humidity, spray water and salt fog
– Highly competent solutions for adapting fans to environmental conditions

Moisture protection
Coated motor and printed circuit board protects against humidity and condensation.

Type of protection: IP 54 / IP 68
In the type of protection IP 54, the motor and circuit boards are coated and therefore protected against spray water and moisture.
The type of protection IP 68 is important for ebm-papst products, as it ensures a high degree of protection for the encapsulated motor and electronic against foreign bodies and water, whilst protecting the user against potential hazards upon contact. Types of protection higher than IP 68 are possible upon request.

Salt fog protection
Salt fog is extremely demanding on the resistance of the product. ebm-papst makes use of technologies that protect fans and blowers from salt fog reliably and durably.

Stainless steel bearings
Special bearings made of stainless steel provide additional protection.

The available solutions could be different depending on the fan size. We would be glad to develop solutions tailored to the demands of your application.

Type of protection – IP code

	Protection against foreign bodies and accidental contact (first digit)		Water protection (second digit)
X	No protection	X	No protection
1	Protection against foreign bodies > 50 mm (back of the hand)	1	Protection against dripping water or condensation
2	Protection against foreign bodies > 12 mm (finger)	2	Protection against dripping water, fans tilted 15° from vertical
3	Protection against foreign bodies > 2,5 mm (tool)	3	Protection against water spray up to 60° from vertical
4	Protection against foreign bodies > 1 mm (wire)	4	Protection against water spray from all sides
5	Protection against dust in harmful quantities	5	Protection against low-pressure water jets
6	Dust-proof	6	Protection against high-pressure water jets
		7	Protection against temporary submersion (15 cm - 1 m)
		8	Protection against continuous submersion

ACmaxx / GreenTech EC-compact fans

Technical information 180
Overview 183
Axial fans 184

ACmaxx / GreenTech EC-compact fans

Technical information

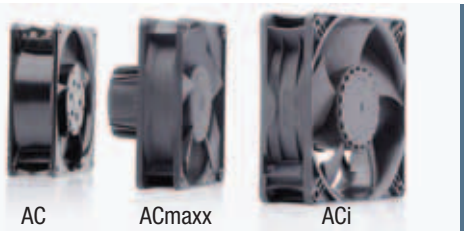

Progress made by ebm-papst
The best example: The ACmaxx fans from ebm-papst, which, thanks to an ingenious yet simple improvement over conventional AC fans, provide substantial benefits.
The aim in developing the new ACmaxx series was to raise the technology standard of the conventional AC fan significantly and, in the process, facilitate the transition to the new technology by retaining the overall mounting dimensions. In short, to ensure the fans can be replaced 1:1 without any peripheral changes or changes to the voltage situation. ebm-papst offers two generations of ACmaxx products that meet different needs.

What ACmaxx and GreenTech EC-compact fan have in common:
Energy efficiency
The drive concept is based on state-of-the-art GreenTech EC technology with outstanding motor efficiency. Compared to AC fans of the same size, ACmaxx energy consumption is up to 77% lower–for higher cooling capacity! Just the energy savings means that the products pay for themselves after only a few months. The savings over the entire service life, especially in systems with multiple fans, is considerable.

Independent of mains frequency and mains voltage
The ACmaxx and GreenTech EC-compact fans are prepared for direct connection to all AC voltages and frequencies. The speed, and thus important properties of the fan such as air flow and noise, are independent of the power frequency and do not change, even within the defined voltage range. Voltage fluctuations in the power system are automatically compensated for.

Long service life
The efficiency of ACmaxx and GreenTech EC-compact fan motors is up to 75% higher than that of conventional AC fan variants. This not only saves energy, it also means less self-heating in the motor. The reduced heating has a direct, positive effect on the bearing system, which is why the fans have a service life that is up to 85% longer! This also extends the service and maintenance intervals significantly. The expense of replacement fans, and even more expensive downtimes, are kept to a manageable minimum.

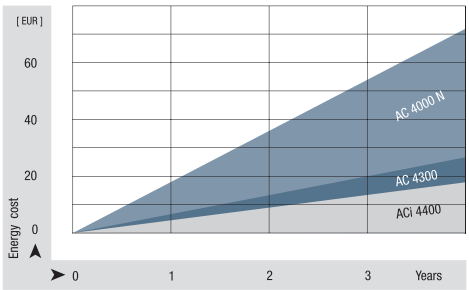

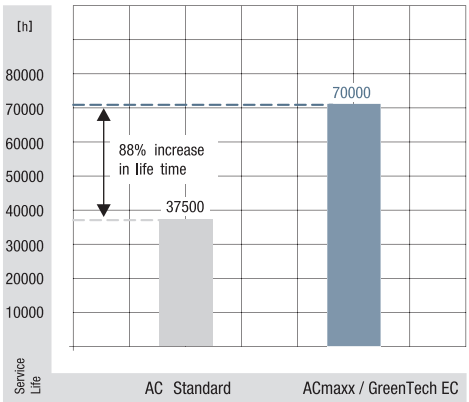

ACmaxx / GreenTech EC-compact fans

Technical information

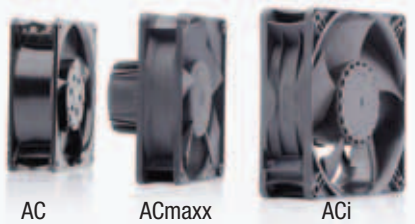

AC ACmaxx ACi

Safety

- Safety certifications: UL, CSA and VDE 0805 / EN60950. VDE 0700 / EN60335 on request.
- Our fans have the CE mark of conformity.
- EMC protection:
  > EN61000-4-4 Level 1 (1 kV or 2 kV)B
  > EN61000-4-2 Level 8 kV/15 kV or 4 kV/8 kV
  > EN61000-4-3
  > EN61000-4-6
  > EN61000-4-8
  > EN55022 Class B

Ambient influences

AC fans are extremely common and are used in a wide variety of applications. In control cabinet cooling, beer coolers, cooling cabinets, wood-burning stoves, medical devices – all have different requirements for resistance to ambient influences. ACmaxx and GreenTech EC-compact fans offer the same features for protection against moisture, splash water and rough ambient conditions.

Particular design features of the GreenTech EC-compact fan (ACi 4400):

GreenTech EC-compact fan is more compact!

As large as existing AC fans – and not a bit larger. This is the most outstanding feature of the new GreenTech EC-compact fans ACi 4400. Even in the hub area, the fan does not differ from typical 119 x 119 x 38 mm AC fans. Out with the AC, in with the GreenTech EC-compact fans ACi 4400 – it's that simple.

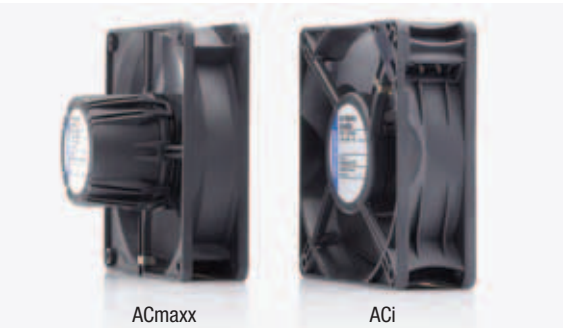

ACmaxx ACi

GreenTech EC-compact fan is more efficient!

ACmaxx saves energy, and the GreenTech EC-compact fan generation saves even more. While an AC fan at 50 Hz can barely reach an overall efficiency of 5-6%, the ACmaxx makes it to approx. 20-25%. With the new GreenTech EC-compact fans ACi 4400, a remarkable level of up to 30% is reached. This is the result of the optimisation of the entire package made up of drive, electronics, AC/DC conversion and aerodynamics. Thus the new GreenTech EC-compact fans series boasts energy savings of almost 75% compared to the corresponding AC fan, thus providing significantly-higher savings than the 40% level of the old AC 4300 generation.

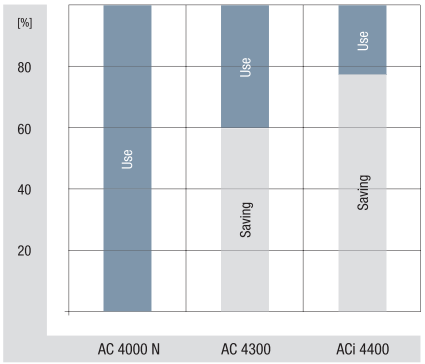

GreenTech EC-compact fan is quieter!

The GreenTech EC-compact fan ACi 4400 is quieter! Quieter than AC fans and quieter than the existing ACmaxx generation. The reason for this are the optimised aerodynamics and the drive, which is optimised for minimum structure-borne noise. Thus the fan is only half as loud at comparable air performance, and is up to 6 dB(A) quieter at some operating points.

Speed independent of voltage and frequency

For the GreenTech EC-compact fans ACi 4400, the speed, and thus the air flow and operating noise, are independent of the supply voltage and power frequency.

Versions are available for 115 VAC with a voltage range from 85 to 132 VAC and 230 VAC with a voltage range of 195 to 265 VAC. Voltage fluctuations and frequency differences in the power system are compensated for automatically.

ACmaxx / GreenTech EC-compact fans

Technical information

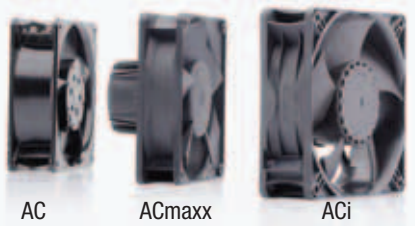

Particular design features of the ACmaxx:

Prepared for all AC voltages
These types have a very wide voltage range from 85 to 265 VAC – the global voltage range, so to speak. This enables the fan to be used around the world, opening up large savings potentials. In addition to reduced logistics effort and stock-keeping, worldwide availability is key. ACmaxx is compatible with every supply voltage–no switching needed. From 85 to 265 volts and mains frequencies of 50 and 60 hertz. Voltage fluctuations in the power system are automatically compensated for.

Higher performance
Unlike conventional AC technology, the state-of-the-art drive concept of this fan series is not linked to a fixed power frequency. This allows the motor speed to be increased over a wide range. Thus ACmaxx provides significantly higher air flow and significantly increased pressure.

Higher flexibility
The flexibility of ACmaxx is one-of-a-kind. With its intelligent features, ACmaxx can be individually adapted to the specific application: standby mode, overload mode at peak times or night reduction all the way to temperature-controlled quiet operation are all possible. From speed setting to long-term function checks using an alarm or speed signal outputs, ACmaxx offers optional interfaces that allow you to monitor operation quickly and easily.

You can find further information about these fan options in the "Specialised fans" chapter, starting on page 161.
Or you can simply contact our application engineers to discuss your ideal ACmaxx or GreenTech EC-compact fan.

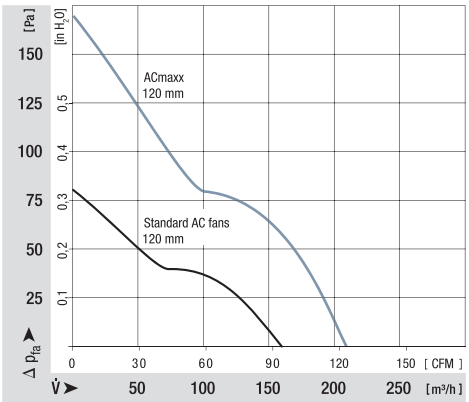

ebmpapst

Fans for AC operation

Overview of air performance

Dimension	Series	Air flow	Page
mm		m³/h	
□ 80 x 32	AC 8300 H	80	184
□ 92 x 38	AC 3200 J	144	185
□ 119 x 25	AC 4400 FN	205	186
□ 119 x 32	AC 4300	204	187
□ 119 x 38	ACi 4400	100...175	188
Ø 130	W1G 130	220...370	190
Ø 172 x 51	AC 6100 N	350	192
Ø 172 x 51	AC 6200 N	350	193
Ø 200	W3G 200	560...1000	194
Ø 250	W3G 250	900...1700	196
Ø 98,5 x 130	AC 100 NR	80..105	198

Subject to alternations

Overview of technically feasible designs

Series	mm	Dimension	VDE, UL, CSA	Sintec sleeve bearings / ball bearings	Speed signal	Go / No-go alarm	Alarm with limit speed	External temperature sensor	Internal temperature sensor	PWM control input	Analogue control input	Multi-option control input	Humidity protection	IP >= IP 54	IP >= IP 68	Salt fog protection	Page
ACmaxx / ACi Axial fans																	
Series	mm							OPTIONAL									p.
AC 8300 H	80 x 80 x 32	*	■	•	•	•	•	•	•	•	–		•	•	–	•	184
AC 3200 J	92 x 92 x 38	*	■	•	•	•	•	•	•	•	–		•	•	–	•	185
AC 4400 FN	119 x 119 x 25	*	■	•	•	•	•	•	•	•	–		•	–	–	–	186
AC 4300	119 x 119 x 32	*	■	•	•	•	•	•	•	•	–		•	•	•	•	187
ACi 4400	119 x 119 x 38	*	■	–	–	–	–	–	–	–	–		•	•	–	•	188
AC 6100 N	Ø 172 x 51	*	■	•	•	•	•	•	•	•	–		•	–	–	–	192
AC 6200 N	Ø 172 x 51	*	■	•	•	•	•	•	•	•	–		•	•	–	•	193
AC 100 NR	Ø 100 x 130	*	■	–	–	–	–	–	–	–	–		•	•	–	–	198

Subject to alternations

– not yet available
• available
□ Sleeve bearings
■ Ball bearings

* Partially granted, partially in registration stage.

Please note that these special versions are not possible for all voltages and speeds, and not in all combinations. The special versions are designed for specific customers and projects. As a rule they are not available off the shelf and are tied to minimum volumes.
Please consult your customer support representative about the feasibility of your special variant.

max. 80 m³/h

ACmaxx axial fans

Series AC 8300 H 80 x 80 x 32 mm

- **Material:** Housing: GRP[1)] (PBTP)
  Impeller: GRP[1)] (PA)
- **Direction of air flow:** Exhaust over struts
- **Direction of rotation:** Clockwise, seen on rotor
- **Connection:** Via single wires AWG 22, TR 64
- **Highlights:** Universally usable for all mains voltages between 85 and 265 VAC
- **Mass:** 325 g

- **Possible special versions:**
  (See chapter DC fans - specials)
  - Speed signal
  - Go / No-go alarm
  - Alarm with limit speed
  - External temperature sensor
  - Internal temperature sensor
  - PWM control input
  - Analogue control input
  - Protection against moisture
  - Protection against salt fog
  - Type of protection: IP 54

1) Fibreglass-reinforced plastic

Nominal data	Air flow	Air flow	Nominal voltage	Frequency	Voltage range	Sound pressure level	Sound power level	Sintec sleeve bearings / Ball bearings	Input power	Nominal speed	Temperature range	Service life L_{10} at 40 °C	at T_{max}	Curve
Type	**m³/h**	**CFM**	**V**	**Hz**	**VAC**	**dB(A)**	**Bel(A)**	**□/■**	**Watts**	**rpm**	**°C**	**Hours**	**Hours**	
AC 8300 H	80	47	**115 / 230**	**50 / 60**	85 ... 265	48	6,2	/■	8,3	5 000	-20...+75	55 000 / 25 000	①	

Subject to alternations

Speed variants available on request.

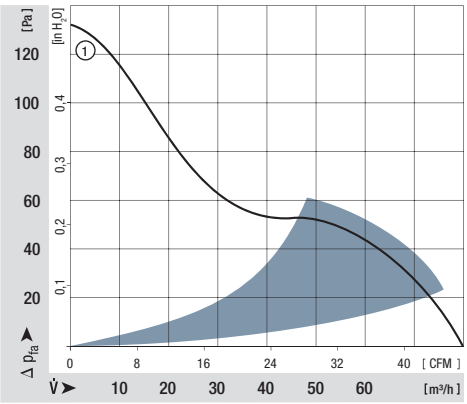

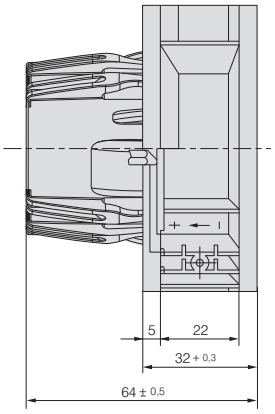

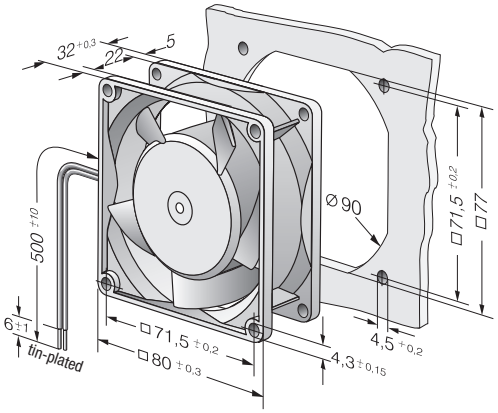

Guard grilles
p. 240

ebmpapst

max. 144 m³/h

ACmaxx axial fans

Series AC 3200 J 92 x 92 x 38 mm

- **Material:** Housing: GRP[1)] (PBTP)
  Impeller: GRP[1)] (PA)
- **Direction of air flow:** Exhaust over struts
- **Direction of rotation:** Clockwise, seen on rotor
- **Connection:** Via single wires AWG 22, TR 64
- **Highlights:** Universally usable for all mains voltages between 85 and 265 VAC
- **Mass:** 325 g

- **Possible special versions:**
  (See chapter DC fans - specials)
  - Speed signal
  - Go / No-go alarm
  - Alarm with limit speed
  - External temperature sensor
  - Internal temperature sensor
  - PWM control input
  - Analogue control input
  - Protection against moisture
  - Protection against salt fog
  - Type of protection: IP 54

1) Fibreglass-reinforced plastic

Nominal data	Air flow	Air flow	Nominal voltage	Frequency	Voltage range	Sound pressure level	Sound power level	Sintec sleeve bearings / Ball bearings	Input power	Nominal speed	Temperature range	Service life L_{10} at 40 °C	at T_{max}	
Type	**m³/h**	**CFM**	**V**	**Hz**	**VAC**	**dB(A)**	**Bel(A)**	□/■	**Watts**	**rpm**	**°C**	**Hours**	**Hours**	
AC 3200 JH	144	85	**115 / 230**	**50 / 60**	85 ... 265	55	6,4	/■	12	6 800	-20...+70	70 000 / 35 000		①

Subject to alternations

Speed variants available on request.

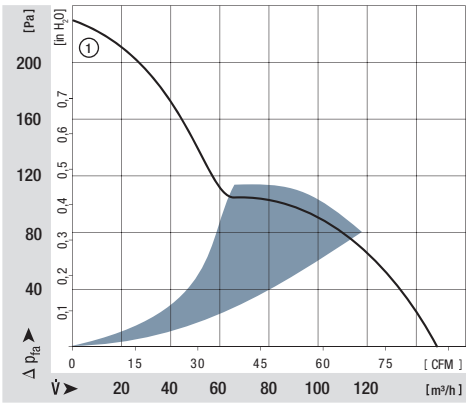

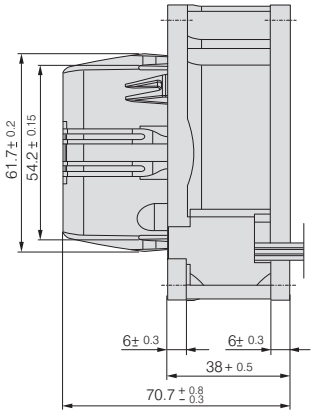

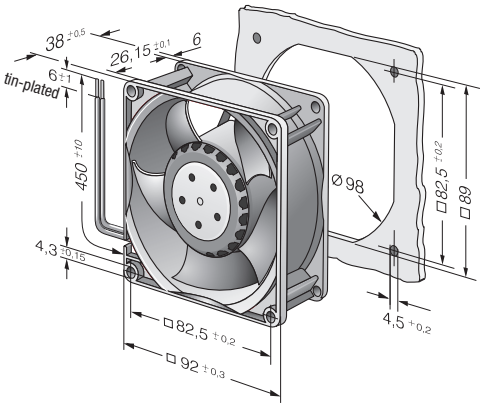

max. 205 m³/h

ACmaxx axial fans

Series AC 4400 FN 119 x 119 x 25 mm

- **Material:** Housing: GRP[1)] (PBTP)
  Impeller: GRP[1)] (PA)
- **Direction of air flow:** Exhaust over struts
- **Direction of rotation:** Counter-clockwise, seen on rotor
- **Connection:** Via single wires AWG 22, TR 64
- **Highlights:** Universally usable for all mains voltages between 85 and 265 VAC
- **Mass:** 370 g

- **Possible special versions:**
  (See chapter DC fans - specials)
  - Speed signal
  - Go / No-go alarm
  - Alarm with limit speed
  - External temperature sensor
  - Internal temperature sensor
  - PWM control input
  - Analogue control input
  - Protection against moisture

1) Fibreglass-reinforced plastic

Nominal data	Air flow	Air flow	Nominal voltage	Frequency	Voltage range	Sound pressure level	Sound power level	Sintec sleeve bearings / Ball bearings	Input power	Nominal speed	Temperature range	Service life L_{10} at 40 °C	at T_{max}	
Type	**m³/h**	**CFM**	**V**	**Hz**	**VAC**	**dB(A)**	**Bel(A)**	□ / ■	**Watts**	**rpm**	**°C**	**Hours**	**Hours**	
AC 4400 FNN	205	121	**115 / 230**	**50 / 60**	85 ... 265	53	6,2	/ ■	12	4 850	-20...+70	60 000 / 30 000		①

Subject to alternations

Speed variants available on request.

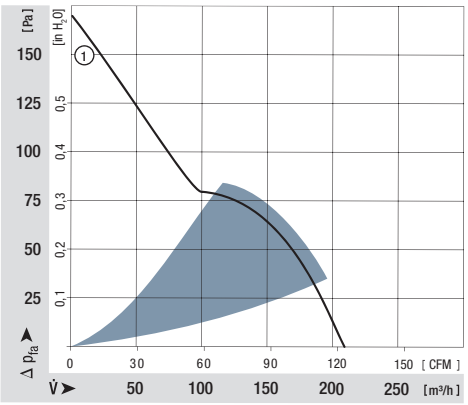

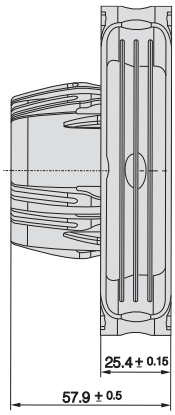

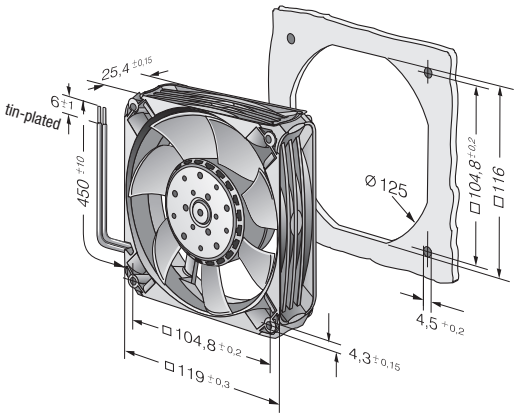

Guard grilles
p. 240

ebmpapst

max. 204 m³/h

ACmaxx axial fans

Series AC 4300 119 x 119 x 32 mm

- **Material:** Housing: GRP[1)] (PBTP)
  Impeller: GRP[1)] (PA)
- **Direction of air flow:** Exhaust over struts
- **Direction of rotation:** Clockwise, seen on rotor
- **Connection:** Via single wires AWG 22, TR 64
- **Highlights:** Universally usable for all mains voltages between 85 and 265 VAC
- **Mass:** 325 g

- **Possible special versions:**
  (See chapter DC fans - specials)
  - Speed signal
  - Go / No-go alarm
  - Alarm with limit speed
  - External temperature sensor
  - Internal temperature sensor
  - PWM control input
  - Analogue control input
  - Protection against moisture
  - Protection against salt fog
  - Type of protection: IP 54 / IP 68

1) Fibreglass-reinforced plastic

Nominal data	Air flow	Air flow	Nominal voltage	Frequency	Voltage range	Sound pressure level	Sound power level	Sintec sleeve bearings / Ball bearings	Input power	Nominal speed	Temperature range	Service life L_{10} at 40 °C	at T_{max}	Kennlinie
Type	**m³/h**	**CFM**	**V**	**Hz**	**VAC**	**dB(A)**	**Bel(A)**	**□ / ■**	**Watts**	**rpm**	**°C**	**Hours**	**Hours**	
AC 4300 H	204	120	**115 / 230**	**50 / 60**	85 ... 265	51	6,4	/ ■	12	3 400	-20...+70	45 000 / 22 500	①

Subject to alternations

Speed variants available on request.

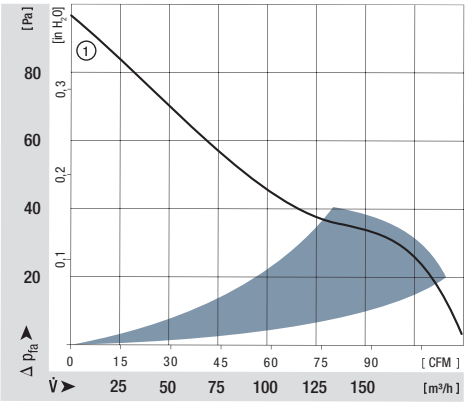

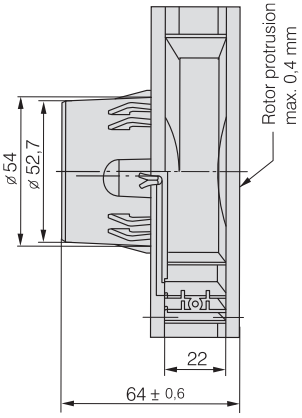

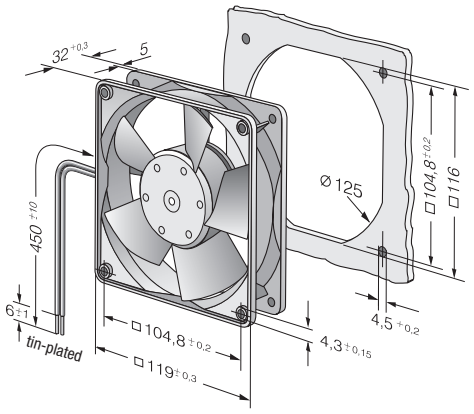

max. 175 m³/h

GreenTech EC-Compact fan axial fans

Series ACi 4400 119 x 119 x 38 mm

- **Material:** Housing: GRP[1)] (PBT)
  Impeller: GRP[1)] (PA)
- **Direction of air flow:** Exhaust over struts
- **Direction of rotation:** Clockwise, seen on rotor
- **Connection:** via 2 flat plugs 2,8 x 0,5 mm
  flying leads optional
- **Highlights:** Fully integrated converter
  and fan electronics
- **Mass:** 250 g

- **Possible special versions:**
  (See chapter DC fans - specials)
  - Protection against moisture
  - Protection against salt fog
  - Type of protection: IP 54

1) Fibreglass-reinforced plastic

Nominal data	Air flow	Air flow	**Nominal voltage**	Voltage range	Sound pressure level	Sound power level	Sintec sleeve bearings Ball bearings	Input power	Nominal speed	Temperature range	Service life L_{10} (40 °C) ebm-papst Standard	Service life L_{10} (T_{max}) ebm-papst Standard	Life expectancy L_{10IPC} (40 °C) see page 17	Curve
Type	**m³/h**	**CFM**	**VDC**	**VDC**	**dB(A)**	**Bel(A)**	□/■	**Watts**	**rpm**	**°C**	**Hours**		**Hours**	
ACi 4420 ML	100	59	**230**	195...265	25	4,1	■	1,4	1 850	-20...+75	65 000 / 25 000		110 000	①
ACi 4420 N	147	86	**230**	195...265	36	4,9	■	2,8	2 700	-20...+75	65 000 / 25 000		110 000	②
ACi 4420 H	160	94	**230**	195...265	39	5,1	■	3,3	3 000	-20...+75	65 000 / 25 000		110 000	③
ACi 4420 HH	175	106	**230**	195...265	42	5,3	■	4,4	3 300	-20...+75	65 000 / 25 000		110 000	④
ACi 4410 HH	175	106	**115**	85...132	42	5,3	■	4,4	3 300	-20...+75	65 000 / 25 000		110 000	④

Subject to alternations

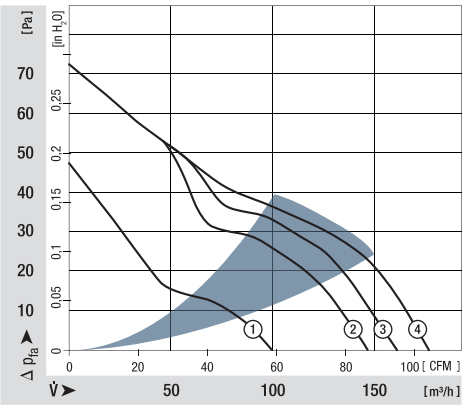

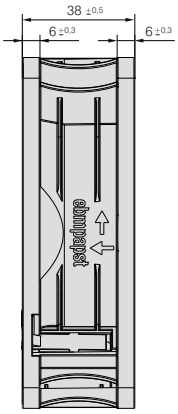

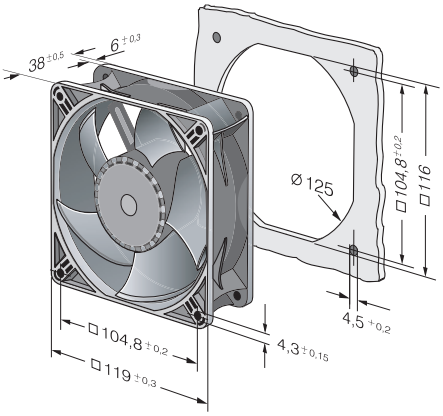

Guard grilles
p. 240

Connection cables
p. 251

ebmpapst

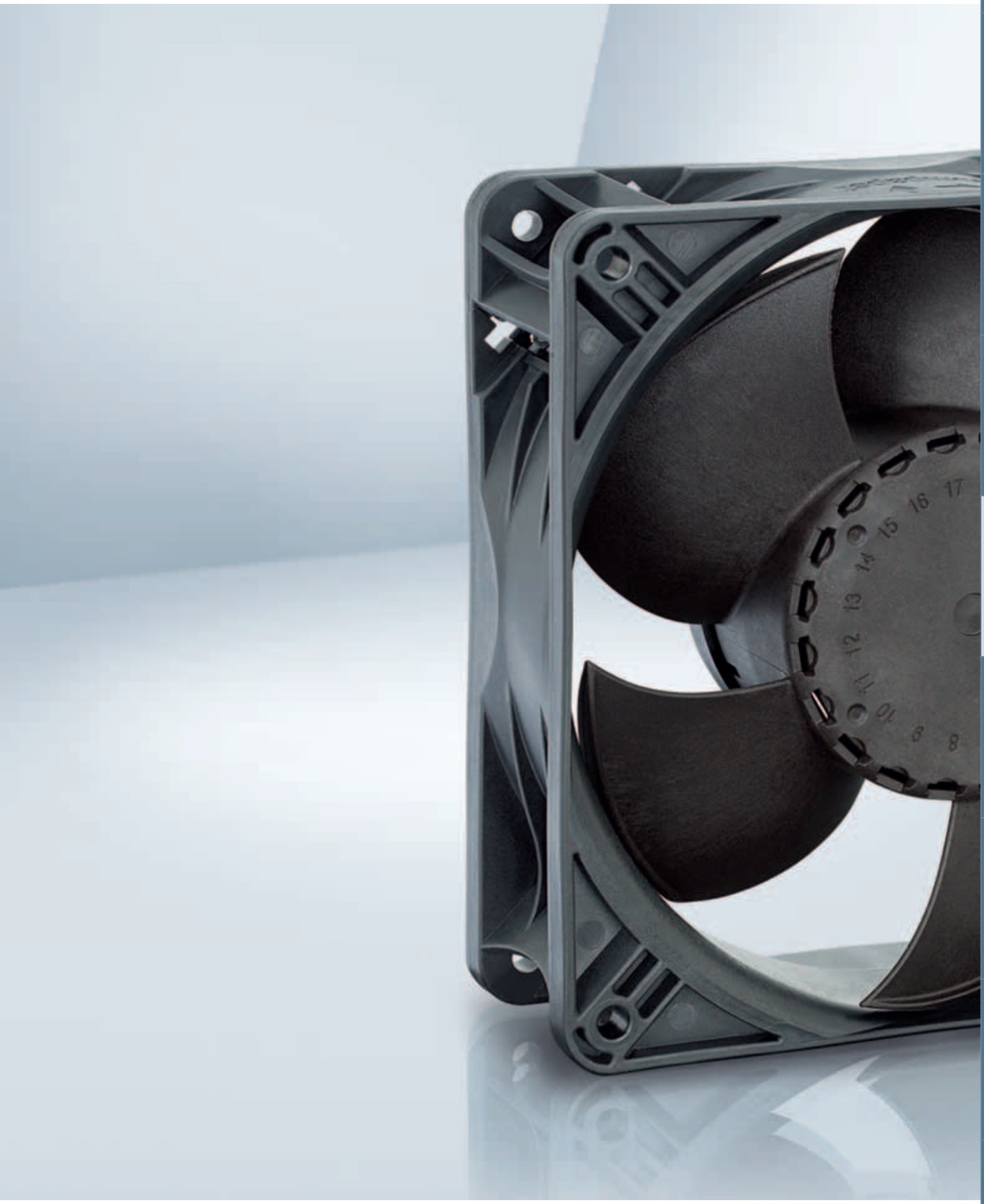

max. 370 m³/h

Energy-saving axial fans

Ø 130 mm

- **Material:** Wall ring: Plastic PP, fibreglass-reinforced
  Blades: Plastic PA, fibreglass-reinforced
- **Number of blades:** 7
- **Direction of air flow:** "V", exhaust over struts
- **Direction of rotation:** Counter-clockwise, seen on rotor
- **Type of protection:** IP 54
- **Insulation class:** "B"
- **Mounting position:** Any
- **Condensate discharges:** None
- **Operation mode:** Continuous operation (S1)
- **Bearings:** Maintenance-free ball bearings

Nominal data

Type	Motor	Curve	Nominal voltage VAC	Frequency Hz	Speed / rpm[1] rpm	Max.input power[1] W	Max.current draw[1] A	Max. back-pressure Pa	Perm. amb. temp. °C	Mass kg	Electrical connections
W1G130-AA49 -01	M1G 055-AI	A	1~ 115	50/60	3200	24	0,38	90	-30..+60	0,75	p. 259 / J7)
W1G130-AA25 -01	M1G 055-AI	B	1~ 230	50/60	3200	24	0,19	90	-30..+70	0,75	p. 259 / J7)

Subject to alternations

[1] Nominal data in operating point with maximum load and 115 or 230 VAC

Curve:

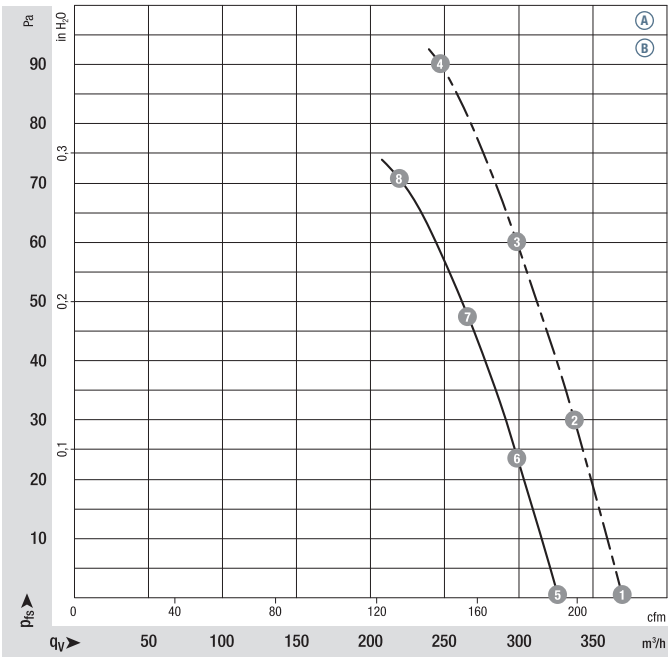

— – — $n_{max.}$ = 3200 min⁻¹ ——— n = 2800 min⁻¹ $n_{min.}$ = 1100 min⁻¹

		n rpm	P_{ed} W	I A	L_WA dB(A)
A	1	3200	23	0,38	63
A	2	3200	24	0,38	61
A	3	3200	24	0,38	60
A	4	3200	24	0,38	63
A	5	2800	16	0,26	60
A	6	2800	16	0,26	58
A	7	2800	16	0,26	57
A	8	2800	16	0,26	60
B	1	3200	23	0,19	63
B	2	3200	24	0,19	61
B	3	3200	24	0,19	60
B	4	3200	24	0,19	63
B	5	2800	16	0,13	60
B	6	2800	16	0,13	58
B	7	2800	16	0,13	57
B	8	2800	16	0,13	60

Air performance measured as per: ISO 5801, Installation category A, with ebm-papst inlet nozzle without protection against accidental contact. Suction-side noise levels: LWA as per ISO 13347, LpA measured at 1 m distance to fan axis. The acoustic values given are only valid under the measurment conditions listed and may vary depending on the installation situation. With any deviation to the standard setup, the specific values have to be checked and reviewed once installed or fitted! For detailed information see http://www.ebmpapst.com/general conditions

ebmpapst

- **Motor protection:** Via electronics and TOP
- **Electrical connection:** Plug-in connection on motor side
- **Protection class:** II
- **Product conforming to standards:** CE; EN 60335-1
- **Approvals:** VDE, UL, CSA, GOST are applied for
- **Speed:** Using the programming unit 2 speeds between n_{min} and n_{max} can be programmed

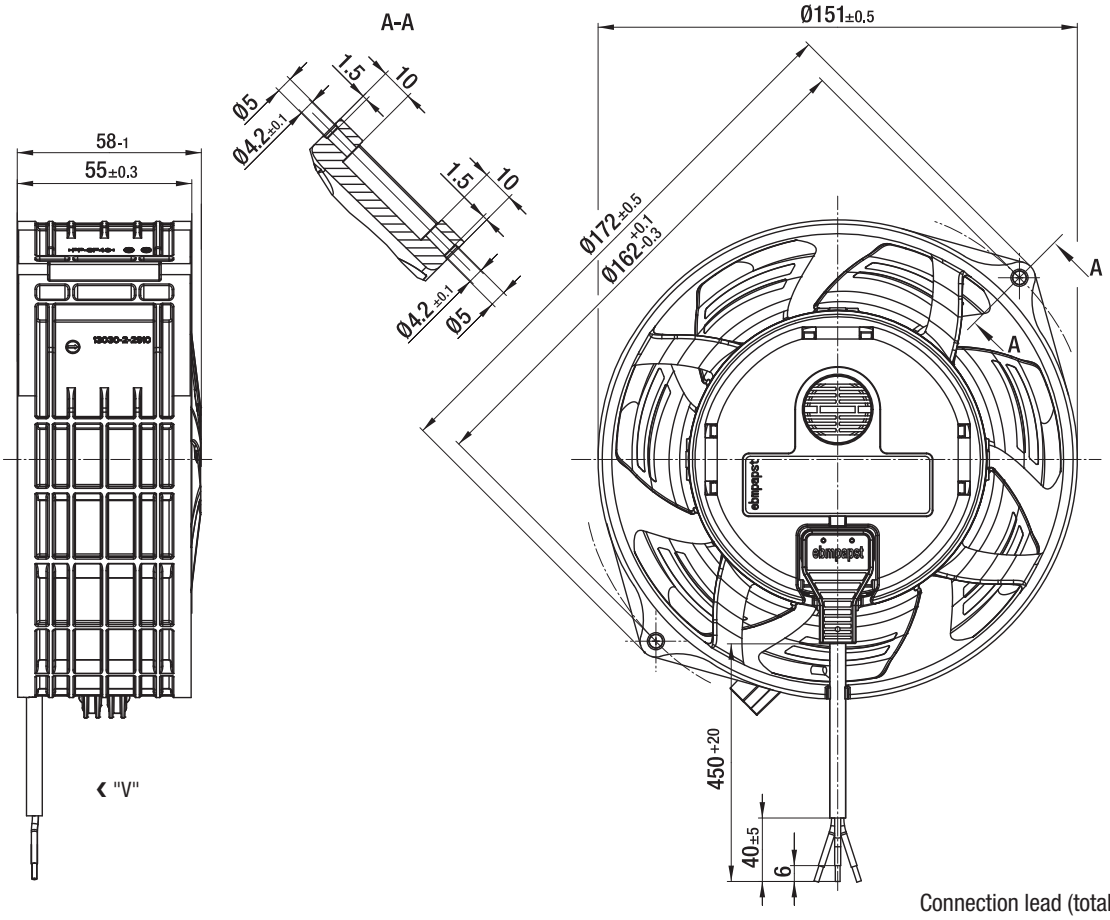

Connection lead (total length 450 mm) is fitted ex works and can be detached.

max. 350 m³/h

ACmaxx axial fans

Series AC 6100 N 172 x 160 x 51 mm

- **Material:** Housing: GRP[1)] (PA)
  Impeller: GRP[1)] (PA)
- **Direction of air flow:** Exhaust over struts
- **Direction of rotation:** Counter clockwise, seen on rotor
- **Connection:** Via single wires AWG 22, TR 64
- **Highlights:** Universally usable for all mains voltages between 85 and 265 VAC, 50-60 Hz
- **Mass:** 760 g

- **Possible special versions:**
  (See chapter DC fans - specials)
  - Speed signal
  - Go / No-go alarm
  - Alarm with limit speed
  - External temperature sensor
  - Internal temperature sensor
  - PWM control input
  - Analogue control input
  - Protection against moisture

1) Fibreglass-reinforced plastic

Nominal data	Air flow	Air flow	Nominal voltage	Frequency	Voltage range	Sound pressure level	Sound power level	Sintec sleeve bearings / Ball bearings	Input power	Nominal speed	Temperature range	Service life L_{10} at 40 °C	at T_{max}	Curve
Type	**m³/h**	**CFM**	**V**	**Hz**	**VAC**	**dB(A)**	**Bel(A)**	□/■	**Watts**	**rpm**	**°C**	**Hours**	**Hours**	
AC 6100 NM	350	206	**115 / 230**	**50 / 60**	85 ... 265	52	6,1	/■	14	2 850	-20...+70	80 000 / 37 500		①
Subject to alternations														

Speed variants available on request.

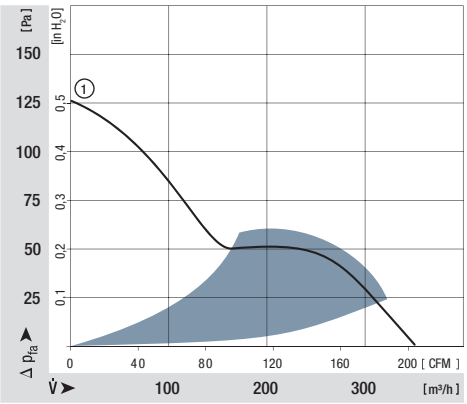

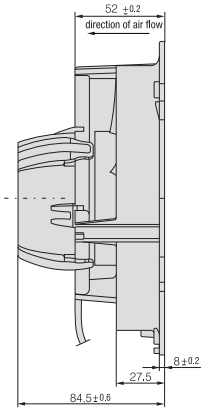

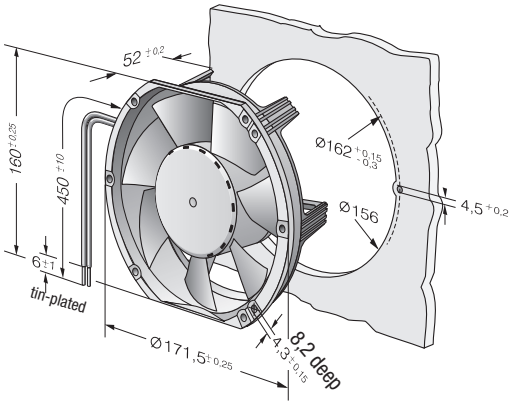

Guard grilles
p. 240

ebmpapst

max. 350 m³/h

ACmaxx axial fans

Series AC 6200 N Ø 172 x 51 mm

- **Material:** Housing: Die-cast aluminium
  Impeller: GRP[1] (PA)
- **Direction of air flow:** Exhaust over struts
- **Direction of rotation:** Counter clockwise, seen on rotor
- **Connection:** Via single wires AWG 22, TR 64
- **Highlights:** Universally usable for all mains voltages between 85 and 265 VAC, 50-60 Hz
  Housing with grounding lug for screw M4 x 8 (Torx)
- **Mass:** 900 g

1) Fibreglass-reinforced plastic

- **Possible special versions:**
  (See chapter DC fans - specials)
  - Speed signal
  - Go / No-go alarm
  - Alarm with limit speed
  - External temperature sensor
  - Internal temperature sensor
  - PWM control input
  - Analogue control input
  - Protection against moisture
  - Protection against salt fog
  - Type of protection: IP 54

Nominal data	Air flow	Air flow	Nominal voltage	Frequency	Voltage range	Sound pressure level	Sound power level	Sintec sleeve bearings / Ball bearings	Input power	Nominal speed	Temperature range	Service life L_{10} at 40 °C	at T_{max}	Curve
Type	**m³/h**	**CFM**	**V**	**Hz**	**VAC**	**dB(A)**	**Bel(A)**	□/■	**Watts**	**rpm**	**°C**	**Hours**	**Hours**	
AC 6200 NM	350	206	**115 / 230**	**50 / 60**	85 ... 265	50	5,7	/■	14	2 850	-20...+70	80 000 / 40 000		①

Subject to alternations

Speed variants available on request.

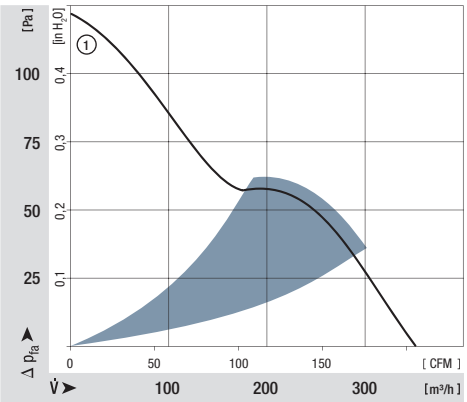

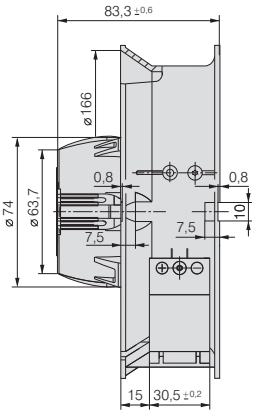

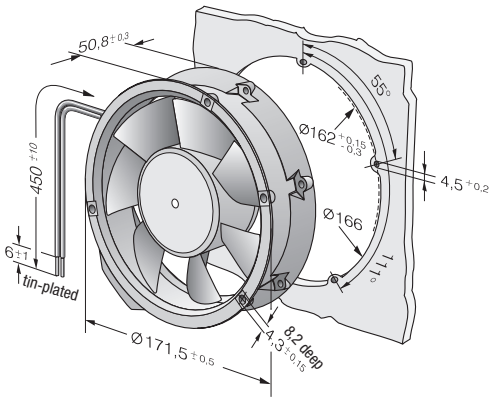

max. 1000 m³/h

EC axial fans

Ø 200 mm

- **Material:** Wall ring: Die-cast aluminium
  Blades: Plastic PP
  Rotor: Thick layer passivated
- **Number of blades:** 7
- **Direction of air flow:** "V", exhaust over struts
- **Direction of rotation:** Counter-clockwise, seen on rotor
- **Type of protection:** IP 54
- **Insulation class:** "B"
- **Mounting position:** Any
- **Condensate discharges:** None, open rotor
- **Operation mode:** Continuous operation (S1)
- **Bearings:** Maintenance-free ball bearings

Nominal data

Type	Motor	Curve	Nominal voltage VAC	Frequency Hz	Speed / rpm[1] rpm	Max. input power[1] W	Max. current draw[1] A	Max. back-pressure Pa	Perm. amb. temp. °C	Mass kg	Technical features and electrical connection
W3G200-HD01 -01	M3G 055-BD	A	1~ 230	50/60	2900	54	0,55	96	-25..+60	1,6	p. 256 / H3)
W3G200-HD01 -03	M3G 055-BD	B	1~ 230	50/60	2900	54	0,55	96	-25..+60	1,7	p. 257 / H4)

Subject to alternations

[1] Nominal data in operating point with maximum load and 230 VAC

Curve:

- A **2 Speed stages**
- B **Speed-controlled**

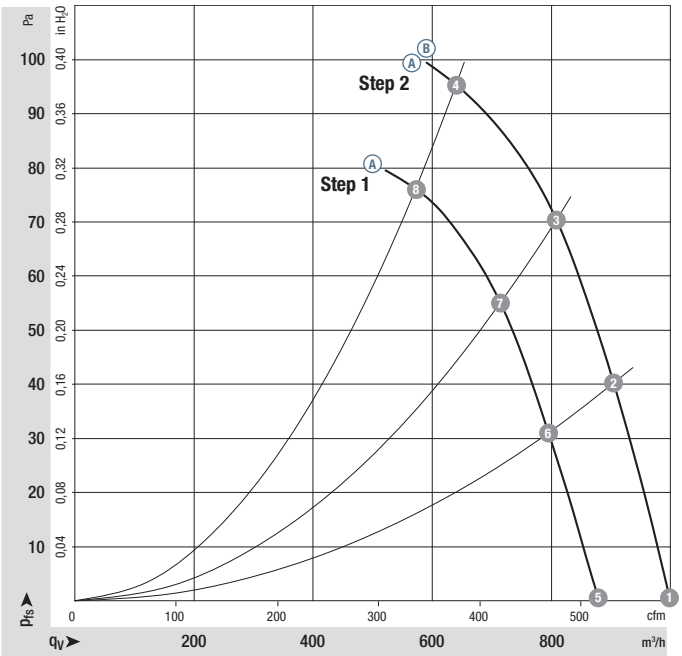

		n rpm	P_{ed} W	I A	L_WA dB(A)
A	1	2970	50	0,49	65
A	2	2890	54	0,53	64
A	3	2830	58	0,56	65
A	4	2900	54	0,55	70
A	5	2645	36	0,37	62
A	6	2575	39	0,40	61
A	7	2530	42	0,42	62
A	8	2500	43	0,43	67
B	1	2970	50	0,49	65
B	2	2890	54	0,53	64
B	3	2830	58	0,56	65
B	4	2900	54	0,55	70

Air performance measured as per: ISO 5801, Installation category A, without protection against accidental contact. Suction-side noise levels: LWA as per ISO 13347, LpA measured at 1 m distance to fan axis. The acoustic values given are only valid under the measurment conditions listed and may vary depending on the installation situation. With any deviation to the standard setup, the specific values have to be checked and reviewed once installed or fitted! For detailed information see http://www.ebmpapst.com/general conditions

ebmpapst

- **Technical features:** See electrical connections p. 256/257
- **EMC:** Interference immunity acc. to EN 61000-6-2 (industrial environment)
  Harmonics acc. to EN 61000-3-2/3
  Interference emission acc. to EN 55022 (class B, household environment)
  On account of the installation conditions, ferritic damping in the connection line may be required for the application.
- **Touch current:** <= 3.5 mA acc. to IEC 60990 (test circuit, illustration 4)
- **Electrical connection** Via terminal strip
- **Protection class:** I (if customer has provided connection for protective earth)
- **Product conforming to standards:** EN 60335-1, CE
- **Approvals:** cUR_{US}

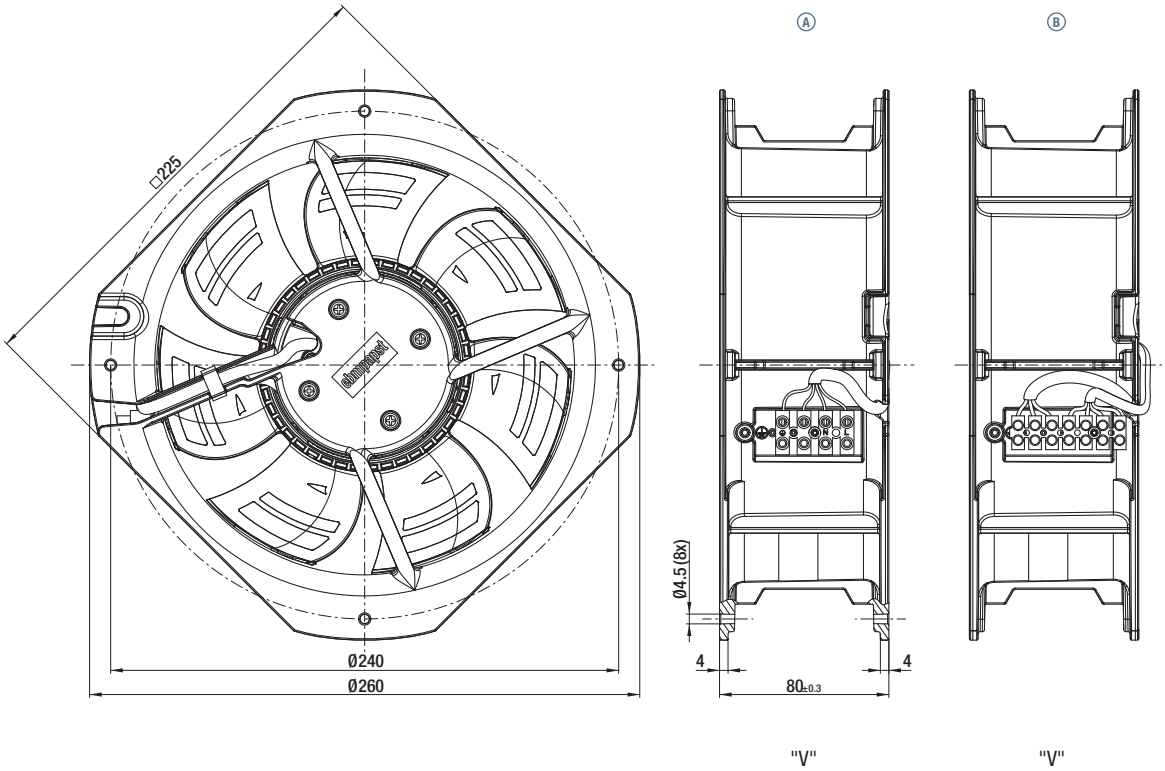

max. 1700 m³/h

EC axial fans

Ø 250 mm

- **Material:** Wall ring: Die-cast aluminium
  Blades: Plastic PP
  Rotor: Thick layer passivated
- **Number of blades:** 7
- **Direction of air flow:** "V", exhaust over struts
- **Direction of rotation:** Counter-clockwise, seen on rotor
- **Type of protection:** IP 54
- **Insulation class:** "B"
- **Mounting position:** Any
- **Condensate discharges:** None, open rotor
- **Operation mode:** Continuous operation (S1)
- **Bearings:** Maintenance-free ball bearings

Nominal data

Type	Motor	Curve	Nominal voltage VAC	Frequency Hz	Speed / rpm[1] rpm	Max. input power[1] W	Max. current draw[1] A	Max. back-pressure Pa	Perm. amb. temp. °C	Mass kg	Technical features and electrical connection
W3G250-HH07 -01	M3G 055-CF	A	1~ 230	50/60	2330	83	0,72	100	-25...+60	2,0	p. 256 / H3)
W3G250-HH07 -03	M3G 055-CF	B	1~ 230	50/60	2330	83	0,72	100	-25...+60	2,1	p. 257 / H4)

Subject to alternations

[1] Nominal data in operating point with maximum load and 230 VAC

Curve:

- A **2 Speed stages**
- B **Speed-controlled**

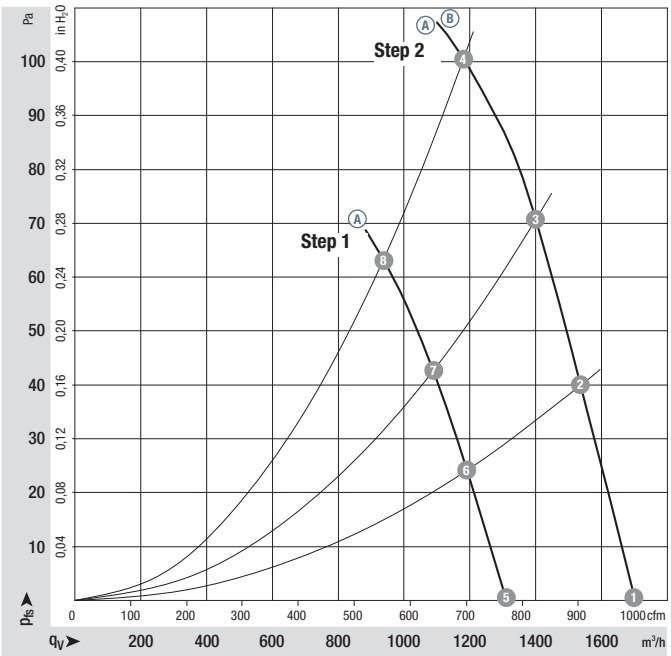

		n rpm	P_{ed} W	I A	L_WA dB(A)
A	1	2465	67	0,59	69
A	2	2410	75	0,65	69
A	3	2375	80	0,68	68
A	4	2330	83	0,72	69
A	5	1900	33	0,33	63
A	6	1880	37	0,37	63
A	7	1860	40	0,38	62
A	8	1850	42	0,40	63
B	1	2465	67	0,59	69
B	2	2410	75	0,65	69
B	3	2375	80	0,68	68
B	4	2330	83	0,72	69

Air performance measured as per: ISO 5801, Installation category A, without protection against accidental contact. Suction-side noise levels: LWA as per ISO 13347, LpA measured at 1 m distance to fan axis. The acoustic values given are only valid under the measurment conditions listed and may vary depending on the installation situation. With any deviation to the standard setup, the specific values have to be checked and reviewed once installed or fitted! For detailed information see http://www.ebmpapst.com/general conditions

ebmpapst

- **Technical features:** See electrical connections p. 256/257
- **EMC:** Interference immunity acc. to EN 61000-6-2 (industrial environment)
  Harmonics acc. to EN 61000-3-2/3
  Interference emission acc. to EN 55022 (class B, household environment)
  On account of the installation conditions, ferritic damping in the connection line may be required for the application.
- **Touch current:** <= 3.5 mA acc. to IEC 60990 (test circuit, illustration 4)
- **Electrical connection** Via terminal strip
- **Protection class:** I (if customer has provided connection for protective earth)
- **Product conforming to standards:** EN 60335-1, CE
- **Approvals:** cUR_{US}

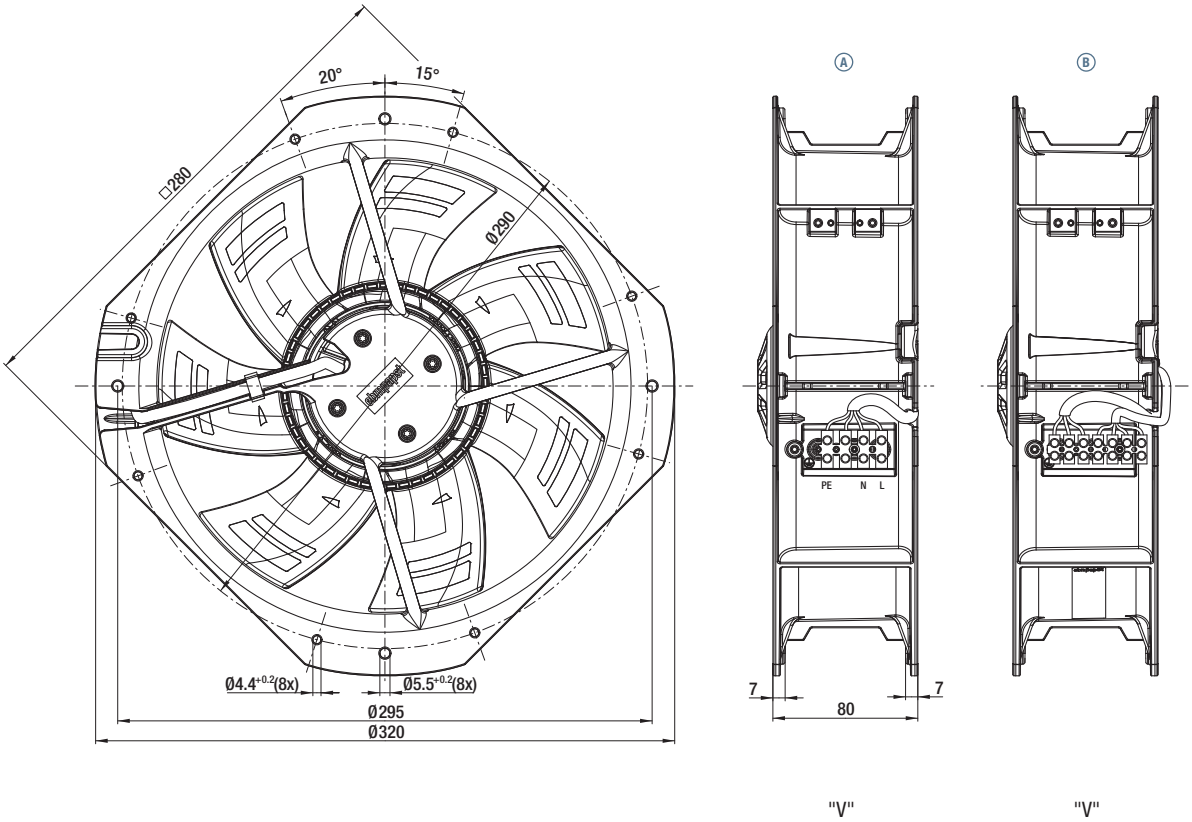

max. 105 m³/h

ACmaxx in-line duct fan

Series AC 100 NR Ø 98,5 x 130 mm

- **Material:** Housing: GRP[1)] (PBT)
  Impeller: GRP[1)] (PA)
- **Direction of air flow:** Intake over struts
- **Direction of rotation:** Clockwise, seen on rotor
- **Connection:** Via 3-pin Europa terminal strip max. 1,5 mm²
- **Highlights:** Universally usable for all mains voltages between 85 and 265 VAC, 50-60 Hz
  Boost function
  Vibration-isolated motor
- **Mass:** 400 g

1) Fibreglass-reinforced plastic

- **Possible special versions:**
  (See chapter DC fans - specials)
  - Protection against moisture
  - Type of protection: IP 44 (IP 45 possible depending on mounting position)

Nominal data		Air flow	Air flow	Nominal voltage	Frequency	Voltage range	Sound pressure level	Sound power level	Sintec sleeve bearings / Ball bearings	Input power	Nominal speed	Temperature range	Service life L_{10} at 40 °C	at T_{max}	Curve
Type		m³/h	CFM	V	Hz	VAC	dB(A)	Bel(A)	□/■	Watts	rpm	°C	Hours	Hours	
nominal	AC 100 NR	80	47	115/230	50-60	85...265	35	4,7	■	2,5	2 750	-10...+55	70 000 / 40 000		①
boost		105	62				42	5,3		4,5	3 500				②

Subject to alternations

Optional: Max. speed up to 135 m³/h (Curve 3).

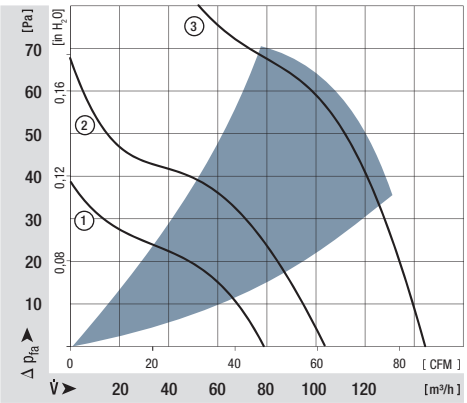

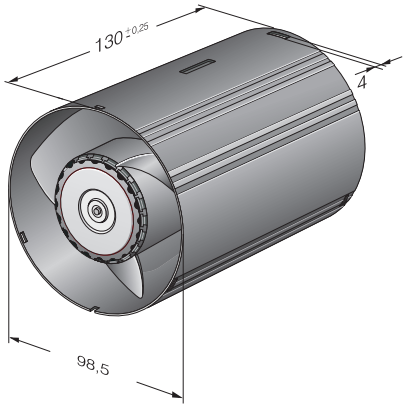

ebmpapst

Highest energy efficiency:	0.03 - 0.045 W/m³/h free air (Specific fan power).
Boost speed setting:	2 speed settings possible via boost function.
Vibration isolation:	Reduced transmission of vibrations from motor to housing.
Intelligence:	Speed settings and control outputs optional.

Connection

Example 1:
Continuous operation at nominal speed boost speed via light switch.

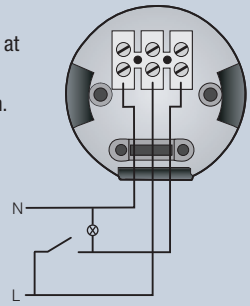

Example 2:
Nominal speed via light switch, separate boost switch.

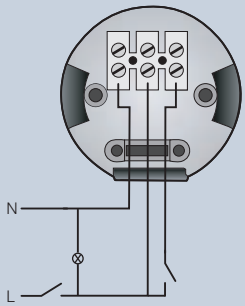

Example 3:
Simple connection, nominal speed without switching.

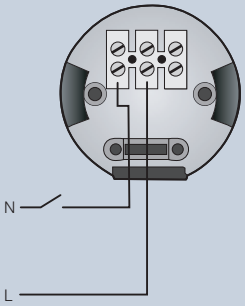

Example 4:
Simple connection, boost speed without switching.

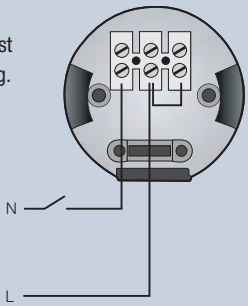

Scope of delivery

AC axial fans

AC axial fan overview 203
AC axial fans 204

AC axial fans

Technical information

Product line
The renowned ebm-papst AC fans are used when DC voltage is not available. The AC range of fans is based on experience gained from decades of development activity, millions of units in series production and competence in innovation of a world-wide technological leader.

A wide range of fans for AC operation is presented in this catalogue. In addition to complete device fans, you will also find fans without external housing, providing a particularly economical advantage when the air duct can be integrated in the respective device.

Variety of sizes
AC fans are available in a variety of sizes with either air exhaust or air intake over struts. Silent running models with sleeve bearings (or for extreme ambient conditions) fans with ball bearings are available. Electrical connection with plug connection or external leads are available.

Shaded-pole or capacitor motors
Fan drives by shaded-pole or capacitor motors, most of which incorporate the world-famous ebm-papst external rotor principle: The fan blades are directly attached to the external rotor of the external rotor motor, thus combining both high performance and profitability.

Flat built AC fans
ebm-papst also has particularly flat built AC fans with internal rotor motor. Their advantage: quick start to full speed. A plastic impeller and the both smaller and lighter internal rotor motor lead to a lower moment of inertia.

Bearings
AC fans with sleeve bearings are powered by Class E insulated motors. Fans with ball bearings are equipped with Class B, E or F insulated motors.

Type of protection
All fans are equipped with type of protection IP 20 as standard.
IP 54 / IP 68 and further types of protection are available on request.

AC voltage
The line of AC fans for Euro voltage according
to IEC 60038 (230 V + 6 %, -10 %) is basically also available for 115 V.

Frequencies
AC fans can be operated at frequencies of 50 Hz or 60 Hz. However, their technical data then changes accordingly.

Capacitor
Fans driven by capacitor external motors
provide particularly high operating efficiency. Generally, the required operating capacitor is already integrated in the fan housing.

Overloading
Almost all AC fans are protected against overloading (e.g. due to locked rotor) the drive motors are either impedance protected (marked “Impedance protected”, and/or “Z.P.”) or are equipped with a thermal switch (marked “Thermally protected” or “Th.P.”). The model designation of these fans ends with “S”.

Axial fans for AC operation

Overview of air performance

Dimension	Series	Air flow	Page
mm		m³/h	
□ 80 x 38	8000 N	30...61	204
Ø 76 x 37	8000 TV	24...47	205
□ 92 x 25	3900	31...70	206
□ 92 x 38	3000	49...89	207
□ 119 x 25	9900	84...135	208
□ 119 x 38	4000 N	80...180	209
□ 119 x 38	4000 Z	100...180	210
Ø 108 x 37	4600 TZ	125...140	211
□ 127 x 38	5900	150...206	212
□ 135 x 38	5600	235...270	213
150 x 172 x 38	7000	320...380	214
Ø 150 x 55	7800	325...380	215
Ø 150 x 55	7400	380...425	216
Ø 172 x 51	6000	375...500	217
□ 225 x 80	W2E 200	880...1030	218
□ 280 x 80	W2E 250	1865	219
Ø 200	K2E 200	765...840	220
Ø 200	K2E 200	765...850	222
Ø 200	K2D 200	780...880	224

Subject to alternations

Overview of technically feasible designs

Dimension	VDE, UL, CSA	Sinter-sleeve bearings/ ball bearings	Speed signal	Humidity protection	IP >= IP 54	IP >= IP 68	Salt fog protection	Page
Axial fan								
Series	**mm**		**OPTIONAL**					**p.**
8000 N	80 x 80 x 38	ja	□/■	–	•	•	•	•	204
8000 TV	Ø 76 x 37	ja	□/■	–	•	•	•	•	205
3900	92 x 92 x 25	ja	□/■	–	•	–	–	–	206
3000	92 x 92 x 38	ja	□/■	–	•	•	•	•	207
9900	119 x 119 x 25	ja	□/■	–	•	–	–	–	208
4000 N	119 x 119 x 38	ja	□/■	•	•	•	•	•	209
4000 Z	119 x 119 x 38	ja	□/■	•	•	•	•	•	210
4600 TZ	Ø 108 x 37	ja	□/■	–	•	•	•	•	211
5900	127 x 127 x 38	ja	□/■	–	•	–	–	–	212
5600	135 x 135 x 38	ja	■	–	•	•	–	•	213
7000	150 x 172 x 38	ja	■	–	–	–	–	–	214
7800	Ø 150 x 55	ja	■	•	–	–	–	–	215
7400	Ø 150 x 55	ja	■	–	–	–	–	–	216
6000	Ø 172 x 51	ja	■	–	–	–	–	–	217

Subject to alternations

• available – not yet available □ Sleeve bearings ■ Ball bearings

max. 61 m³/h

AC axial fans

Series 8000 N 80 x 80 x 38 mm

- **Material:** Housing: Die-cast aluminium
  Impeller: Painted sheet steel
- **Direction of air flow:** Exhaust over struts
- **Direction of rotation:** Clockwise, seen on rotor
- **Connection:** Via 2 single wires
  grounding lug for M4 x 8
- **Mass:** 490 g
- **Note:**
  Please note our new ACmaxx series. With identical mounting dimensions and voltages, this series achieves higher energy efficiency. See page 184

- **Possible special versions:**
  (See page 12)
  - Protection against moisture
  - Protection against salt fog
  - Type of protection: IP 54 / IP 68

Nominal data	Air flow	Air flow	Nominal voltage	Frequency	Sound pressure level	Sound power level	Sintec sleeve bearings / Ball bearings	Input power	Nominal speed	Temperature range	Service life L_{10} at 40 °C	at T_{max}	Curve
Type	**m³/h**	**CFM**	**V**	**Hz**	**dB(A)**	**Bel(A)**	□/■	**Watts**	**rpm**	**°C**	**Hours**	**Hours**	
8880 N	30	17,7	**230**	**50**	18	3,3	□/	9,0	1 750	-10...+80	60 000 / 25 000		①
8850 N	37	21,8	**230**	**50**	24	3,9	□/	12,5	2 150	-10...+70	52 500 / 25 000		②
8550 N	50	29,4	**230**	**50**	30	4,4	□/	12,0	2 700	-10...+70	52 500 / 25 000		③
8556 N	50	29,4	**230**	**50**	31	4,5	/■	12,0	2 800	-40...+90	52 500 / 15 000		③
8830 N	36	21,2	**115**	**60**	21	3,7	□/	8,0	1 950	-10...+80	62 500 / 25 000		④
8800 N	47	27,7	**115**	**60**	28	4,3	□/	11,0	2 500	-10...+70	55 000 / 27 500		⑤
8500 N	61	35,9	**115**	**60**	34	4,8	□/	11,0	3 200	-10...+75	55 000 / 25 000		⑥
8506 N	61	35,9	**115**	**60**	35	5,0	/■	11,0	3 300	-40...+95	55 000 / 15 000		⑥

Subject to alternations

Fan type					Lead wires	Length "L"
8880 N	8830 N	8800 N	8550 N	8500 N	310 mm long	AWG 18, TR 64
8556 N	8506 N				310 mm long	AWG 22
8850 N					440 mm long	AWG 18, TR 64

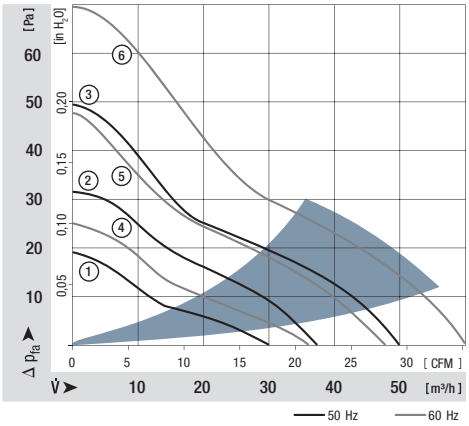

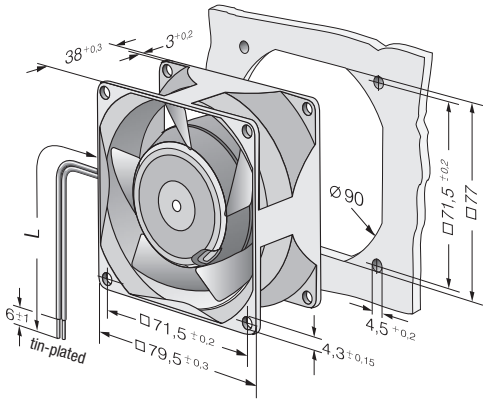

Guard grilles
from p. 238

ebmpapst

max. 47 m³/h

AC axial fans

Series 8000 TV Ø 76 x 37 mm

- **Material:** Impeller: Die-cast aluminium
  Mounting bracket: Metal
- **Direction of air flow:** Exhaust over mounting bracket
- **Direction of rotation:** Clockwise, seen on rotor
- **Connection:** Via 2 single wires
- **Mass:** 370 g

- **Possible special versions:**
  (See page 12)
  - Protection against moisture
  - Protection against salt fog
  - Type of protection: IP 54 / IP 68

Nominal data	Air flow	Air flow	Nominal voltage	Frequency	Sound pressure level	Sintec sleeve bearings / Ball bearings	Input power	Nominal speed	Temperature range	Service life L_{10} at 40 °C	at T_{max}
Type	**m³/h**	**CFM**	**V**	**Hz**	**dB(A)**	□/■	**Watts**	**rpm**	**°C**	**Hours**	**Hours**
8880 TV	24	14,1	**230**	**50**	15	□/	9,0	1 650	-10...+80	60 000 / 25 000	
8850 TV	31	18,2	**230**	**50**	20	□/	12,0	2 100	-10...+70	52 500 / 25 000	
8550 TV	40	23,5	**230**	**50**	27	□/	12,0	2 650	-10...+70	52 500 / 25 000	
8556 TV	40	23,5	**230**	**50**	28	/■	12,0	2 750	-40...+90	52 500 / 15 000	
8830 TV	27	15,9	**115**	**60**	18	□/	8,0	1 850	-10...+80	62 500 / 25 000	
8800 TV	36	21,2	**115**	**60**	24	□/	11,0	2 450	-10...+70	55 000 / 27 500	
8500 TV	47	27,7	**115**	**60**	32	□/	11,0	3 150	-10...+75	55 000 / 25 000	
8506 TV	47	27,7	**115**	**60**	33	/■	11,0	3 250	-40...+95	55 000 / 15 000	

Subject to alternations

The air flow and noise level of fans without external housing depends on the installation conditions. The stated air flow and noise has been measured with an orifice 76.5 mm Ø at a distance of approx. 17 mm from the mounting bracket. Under exceptionally favourable mounting conditions, the air flow of fan series 8000 N is achievable. The noise in the optimal operating range can only be measured for these fans in a specific application.

Fan type				Lead wires	Length "L"
8880 TV	8850 TV	8830 TV	8800 TV	325 mm long	AWG 18, TR 64
8550 TV	8500 TV			325 mm long	AWG 18, TR 64
8556 TV	8506 TV			325 mm long	AWG 18

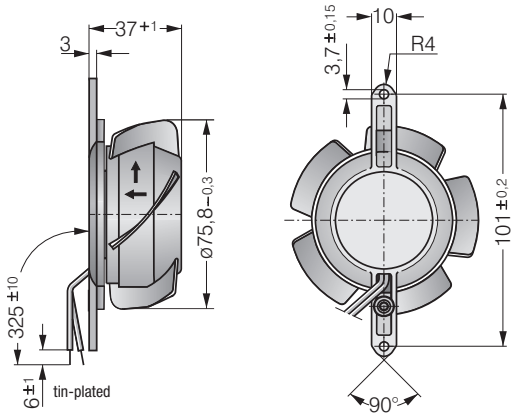

max. 70 m³/h

AC axial fans

Series 3900 92 x 92 x 25 mm

- **Material:** Housing: Die-cast aluminium
  Impeller: Mineral-reinforced plastic PA
- **Direction of air flow:** Exhaust over struts
- **Direction of rotation:** Counter-clockwise, seen on rotor
- **Connection:** Via 2 flat plug 2,8 x 0,5 mm
  grounding lug for M4
- **Mass:** 280 g
- **Note:**
  Please note our new ACmaxx series. With identical mounting dimensions and voltages, this series achieves higher energy efficiency. See page 185

- **Possible special versions:**
  (See page 12)
  - Protection against moisture

Nominal data	Air flow	Air flow	Nominal voltage	Frequency	Sound pressure level	Sound power level	Sintec sleeve bearings / Ball bearings	Input power	Nominal speed	Temperature range	Service life L_{10} at 40 °C	at T_{max}	Curve
Type	**m³/h**	**CFM**	**V**	**Hz**	**dB(A)**	**Bel(A)**	□/■	**Watts**	**rpm**	**°C**	**Hours**	**Hours**	
3950 L	31	18,2	**230**	**50**	24	3,8	□/	6,0	1 550	-10...+80	70 000 / 27 500		①
3956 L	31	18,2	**230**	**50**	24	3,8	/■	6,0	1 550	-40...+80	70 000 / 27 500		①
3950 M	45	26,5	**230**	**50**	29	4,2	□/	6,0	2 150	-10...+80	70 000 / 27 500		②
3956 M	45	26,5	**230**	**50**	29	4,2	/■	6,0	2 150	-40...+80	70 000 / 27 500		②
3950	59	34,7	**230**	**50**	35	4,7	□/	11,0	2 650	-20...+80	55 000 / 20 000		③
3956	59	34,7	**230**	**50**	35	4,7	/■	11,0	2 650	-40...+80	55 000 / 20 000		③
3900 L	39	23,0	**115**	**60**	27	4,0	□/	5,0	1 850	-10...+80	70 000 / 27 500		④
3906 L	39	23,0	**115**	**60**	27	4,0	/■	5,0	1 850	-40...+80	70 000 / 27 500		④
3900 M	53	31,2	**115**	**60**	34	4,6	□/	5,0	2 600	-10...+80	70 000 / 27 500		⑤
3906 M	53	31,2	**115**	**60**	34	4,6	/■	5,0	2 600	-40...+80	70 000 / 27 500		⑤
3900	70	41,2	**115**	**60**	40	5,1	□/	9,0	3 150	-20...+80	60 000 / 22 500		⑥
3906	70	41,2	**115**	**60**	40	5,1	/■	9,0	3 150	-40...+80	60 000 / 22 500		⑥

Subject to alternations

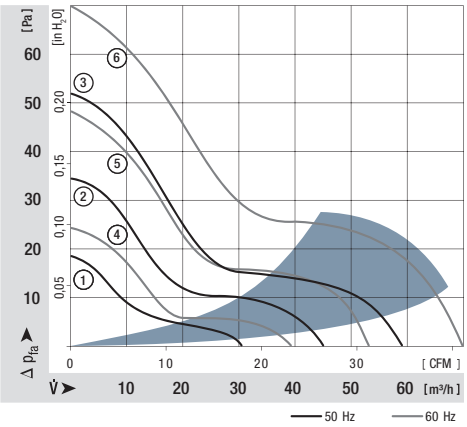

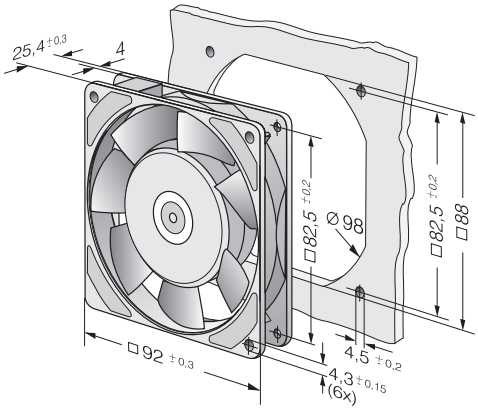

Guard grilles from p. 238

Connection cables p. 251

ebmpapst

max. 89 m³/h

AC axial fans

Series 3000 92 x 92 x 38 mm

- **Material:** Housing: Die-cast aluminium
  Impeller: Painted sheet steel
- **Direction of air flow:** Exhaust over struts
- **Direction of rotation:** Clockwise, seen on rotor
- **Connection:** Via 2 single wires
  grounding lug for M4 x 8
- **Mass:** 420 g
- **Note:**
  Please note our new ACmaxx series. With identical mounting dimensions and voltages, this series achieves higher energy efficiency. See page 185

- **Possible special versions:**
  (See page 12)
  - Protection against moisture
  - Protection against salt fog
  - Type of protection: IP 54 / IP 68

Nominal data	Air flow	Air flow	Nominal voltage	Frequency	Sound pressure level	Sound power level	Sintec sleeve bearings / Ball bearings	Input power	Nominal speed	Temperature range	Service life L_{10} at 40 °C	at T_{max}	Curve
Type	**m³/h**	**CFM**	**V**	**Hz**	**dB(A)**	**Bel(A)**	□/■	**Watts**	**rpm**	**°C**	**Hours**	**Hours**	
3850	49	28,8	**230**	**50**	24	3,7	□/	9,0	1 750	-10...+75	60 000 / 27 500		①
3856	54	31,8	**230**	**50**	26	3,9	/■	9,0	1 950	-40...+90	60 000 / 20 000		②
3550	67	39,4	**230**	**50**	32	4,4	□/	8,5	2 300	-10...+80	60 000 / 25 000		③
3556	67	39,4	**230**	**50**	33	4,5	/■	8,5	2 400	-40...+90	60 000 / 20 000		③
3650	75	44,1	**230**	**50**	36	4,8	□/	12,0	2 650	-10...+55	52 500 / 37 500		④
3656	75	44,1	**230**	**50**	37	4,9	/■	12,0	2 700	-40...+75	52 500 / 22 500		④
3800	54	31,8	**115**	**60**	26	3,9	□/	8,0	1 900	-10...+80	62 500 / 25 000		⑤
3806	60	35,3	**115**	**60**	29	4,2	/■	8,0	2 150	-40...+95	62 500 / 17 500		⑥
3500	73	43,0	**115**	**60**	35	4,6	□/	8,0	2 500	-10...+80	62 500 / 25 000		⑦
3506	73	43,0	**115**	**60**	36	4,7	/■	8,0	2 600	-40...+95	62 500 / 17 500		⑦
3600	89	52,4	**115**	**60**	41	5,1	□/	11,0	3 100	-10...+65	55 000 / 30 000		⑧
3606	89	52,4	**115**	**60**	42	5,2	/■	11,0	3 200	-40...+75	55 000 / 25 000		⑧

Subject to alternations

Fan type	Lead wires	Length "L"
With sleeve bearings	310 mm long	AWG 18, TR 64
With ball bearings	310 mm long	AWG 18

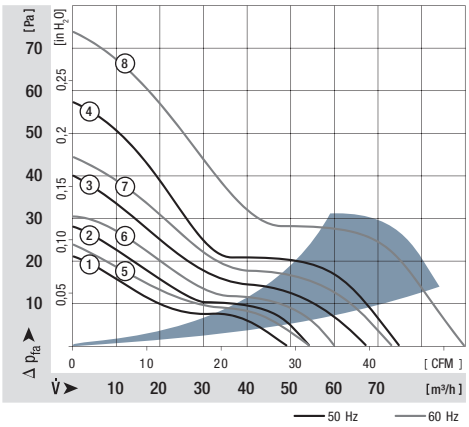

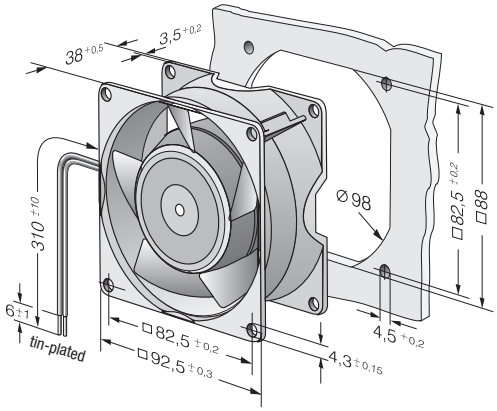

max. 135 m³/h

AC axial fans

Series 9900 119 x 119 x 25 mm

- **Material:** Housing: Die-cast aluminium
  Impeller: Mineral-reinforced plastic PA
- **Direction of air flow:** Exhaust over struts
- **Direction of rotation:** Counter-clockwise, seen on rotor
- **Connection:** Via 2 flat plug 2,8 x 0,5 mm grounding lug for M4
- **Mass:** 320 g
- **Note:**
  Please note our new ACmaxx series. With identical mounting dimensions and voltages, this series achieves higher energy efficiency. See page 188

- **Possible special versions:**
  (See page 12)
  - Protection against moisture

Nominal data	Air flow	Air flow	Nominal voltage	Frequency	Sound pressure level	Sound power level	Sintec sleeve bearings / Ball bearings	Input power	Nominal speed	Temperature range	Service life L_{10} at 40 °C	at T_{max}	Curve
Type	**m³/h**	**CFM**	**V**	**Hz**	**dB(A)**	**Bel(A)**	□/■	**Watts**	**rpm**	**°C**	**Hours**	**Hours**	
9956 L	84	49,4	**230**	**50**	29	4,4	/■	9,5	1850	-40...+80	57 500 / 22 500		①
9956 M	104	61,2	**230**	**50**	35	4,7	/■	10,0	2250	-40...+80	57 500 / 22 500		②
9950	117	68,9	**230**	**50**	37	5,0	□/	14,0	2450	-20...+70	47 500 / 22 500		③
9956	117	68,9	**230**	**50**	37	5,0	/■	14,0	2450	-40...+70	47 500 / 22 500		③
9906 L	100	58,9	**115**	**60**	34	4,6	/■	8,0	2100	-40...+80	62 500 / 25 000		④
9906 M	111	65,3	**115**	**60**	37	5,0	/■	8,0	2450	-40...+80	62 500 / 25 000		⑤
9900	135	79,5	**115**	**60**	42	5,4	□/	12,0	2850	-20...+70	52 500 / 25 000		⑥
9906	135	79,5	**115**	**60**	42	5,4	/■	12,0	2850	-40...+70	52 500 / 25 000		⑥

Subject to alternations

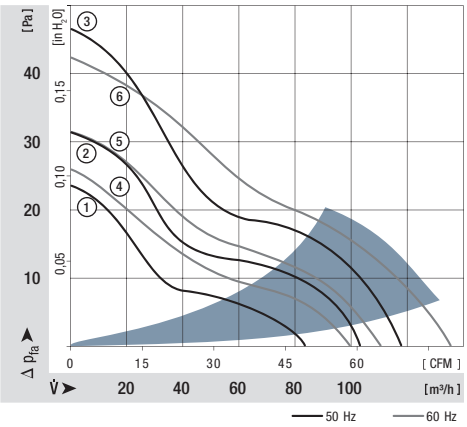

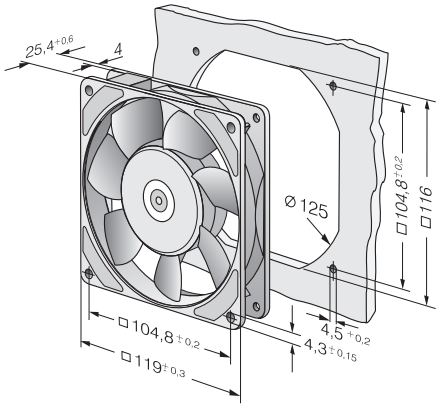

Guard grilles from p. 238

Connection cables p. 251

ebmpapst

max. 180 m³/h

AC axial fans

Series 4000 N 119 x 119 x 38 mm

- **Material:** Housing: Die-cast aluminium
  Impeller: Painted sheet steel
- **Direction of air flow:** Intake over struts
  Types 4890 N and 4840 N exhaust over struts
- **Direction of rotation:** Clockwise, seen on rotor
- **Connection:** Via 2 single wires
  grounding lug for M4 and UNC
- **Mass:** 550 g
- **Note:**
  Please note our new ACmaxx series. With identical mounting dimensions and voltages, this series achieves higher energy efficiency. See page 188

- **Optionally available:**
  Variants with strengthened mounting flanges and customizable single strands
- **Possible special versions:**
  (See page 12)
  - Speed signal
  - Protection against moisture
  - Protection against salt fog
  - Type of protection: IP 54 / IP 68

Nominal data	Air flow	Air flow	Nominal voltage	Frequency	Sound pressure level	Sound power level	Sintec sleeve bearings / Ball bearings	Input power	Nominal speed	Temperature range	Service life L_{10} at 40 °C	at T_{max}	Curve
Type	**m³/h**	**CFM**	**V**	**Hz**	**dB(A)**	**Bel(A)**	□/■	**Watts**	**rpm**	**°C**	**Hours**	**Hours**	
4890 N	80	47	**230**	**50**	25	4,0	□/	11,0	1 550	-10...+70	55 000 / 27 500		①
4850 N*	100	59	**230**	**50**	32	4,4	□/	10,0	1 800	-10...+70	57 500 / 27 500		②
4580 N*	123	72	**230**	**50**	41	5,2	□/	18,0	2 350	-10...+55	40 000 / 27 500		③
4550 N*	145	85	**230**	**50**	44	5,4	□/	16,5	2 550	-10...+55	42 500 / 30 000		④
4650 N	160	94	**230**	**50**	46	5,4	□/	19,0	2 650	-10...+55	37 500 / 27 500		⑤
4656 N	160	94	**230**	**50**	47	5,5	/■	19,0	2 650	-40...+85	37 500 / 15 000		⑤
4840 N	85	50	**115**	**60**	26	4,1	□/	10,0	1 650	-10...+75	57 500 / 25 000		⑥
4800 N*	97	57	**115**	**60**	32	4,3	□/	9,0	1 750	-10...+75	60 000 / 27 500		⑦
4530 N*	151	89	**115**	**60**	45	5,4	□/	16,0	2 700	-10...+65	42 500 / 25 000		⑧
4500 N*	169	100	**115**	**60**	48	5,7	□/	15,0	3 000	-10...+65	47 500 / 25 000		⑨
4600 N	180	106	**115**	**60**	50	5,7	□/	18,0	3 100	-10...+60	40 000 / 25 000		⑩
4606 N	180	106	**115**	**60**	51	5,8	/■	18,0	3 100	-40...+90	40 000 / 15 000		⑩

Subject to alternations

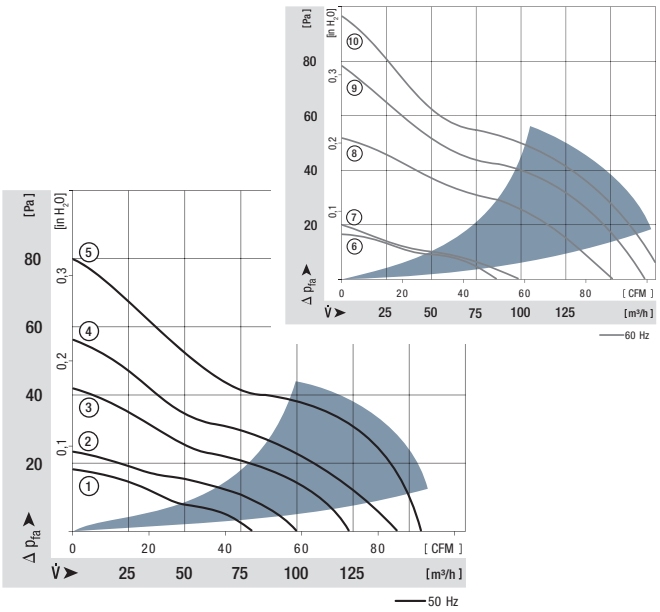

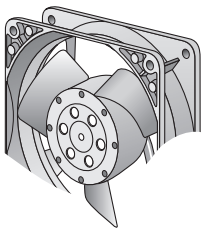

* Fan with 3 blades.

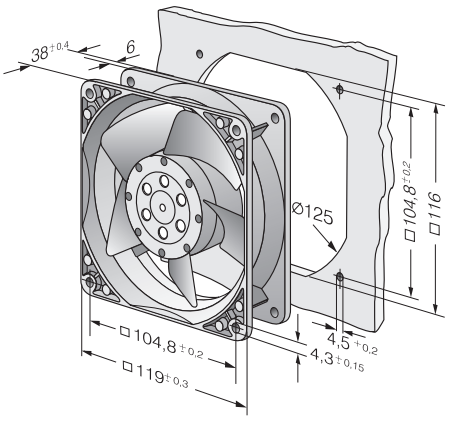

max. 180 m³/h

AC axial fans

Series 4000 Z 119 x 119 x 38 mm

- **Material:** Housing: Die-cast aluminium
  Impeller: Painted sheet steel
- **Direction of air flow:** Exhaust over struts
- **Direction of rotation:** Clockwise, seen on rotor
- **Connection:** Via 2 flat plug 2,8 x 0,5 mm
  grounding lug for M4 x 8
- **Mass:** 540 g
- **Note:**
  Please note our new ACmaxx series. With identical mounting dimensions and voltages, this series achieves higher energy efficiency. See page 188

- **Possible special versions:**
  (See page 12)
  - Speed signal
  - Protection against moisture
  - Protection against salt fog
  - Type of protection: IP 54 / IP 68

Nominal data	Air flow	Air flow	Nominal voltage	Frequency	Sound pressure level	Sound power level	Sintec sleeve bearings / Ball bearings	Input power	Nominal speed	Temperature range	Service life L_{10} at 40 °C	at T_{max}	Curve
Type	**m³/h**	**CFM**	**V**	**Hz**	**dB(A)**	**Bel(A)**	□/■	**Watts**	**rpm**	**°C**	**Hours**	**Hours**	
4850 Z	100	59	**230**	**50**	26	4,0	□/	13,0	1 700	-10...+65	50 000 / 27 500		①
4856 Z	100	59	**230**	**50**	26	4,0	/■	13,0	1 700	-40...+75	50 000 / 20 000		①
4580 Z	115	68	**230**	**50**	30	4,3	□/	13,0	1 900	-10...+65	50 000 / 27 500		②
4586 Z	115	68	**230**	**50**	30	4,3	/■	13,0	1 900	-40...+75	50 000 / 20 000		②
4650 Z	160	94	**230**	**50**	40	5,3	□/	19,0	2 650	-10...+50	37 500 / 30 000		③
4656 Z	160	94	**230**	**50**	40	5,3	/■	19,0	2 650	-40...+75	37 500 / 17 500		③
4800 Z	105	62	**115**	**60**	28	4,1	□/	12,0	1 800	-10...+70	52 500 / 25 000		④
4806 Z	105	62	**115**	**60**	28	4,1	/■	12,0	1 800	-40...+75	52 500 / 17 500		④
4530 Z	120	71	**115**	**60**	32	4,4	□/	12,0	2 000	-10...+70	52 500 / 25 000		⑤
4536 Z	120	71	**115**	**60**	32	4,4	/■	12,0	2 000	-40...+75	52 500 / 17 500		⑤
4600 Z	180	106	**115**	**60**	45	5,6	□/	18,0	3 100	-10...+60	40 000 / 25 000		⑥
4606 Z	180	106	**115**	**60**	45	5,6	/■	18,0	3 100	-40...+85	40 000 / 15 000		⑥

Subject to alternations

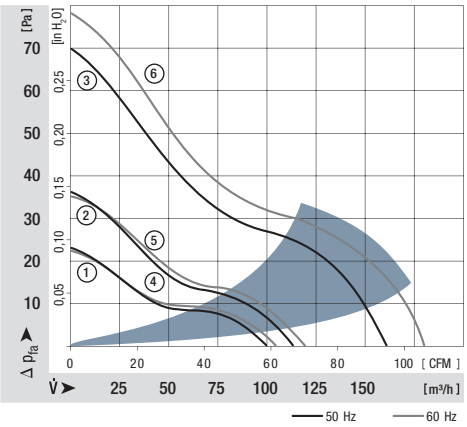

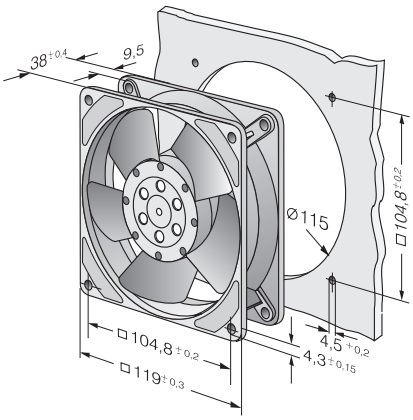

Guard grilles from p. 238

Connection cables p. 251

ebmpapst

max. 140 m³/h

AC axial fans

Series 4600 TZ Ø 108 x 37 mm

- **Material:** Impeller: Die-cast aluminium
  Mounting bracket: Metal
- **Direction of air flow:** Exhaust over mounting bracket
- **Direction of rotation:** Clockwise, seen on rotor
- **Connection:** Via 2 single wires
- **Mass:** 430 g

- **Possible special versions:**
  (See page 12)
  - Protection against moisture
  - Protection against salt fog
  - Type of protection: IP 54 / IP 68

Nominal data	Air flow	Air flow	Nominal voltage	Frequency	Sound pressure level	Sintec sleeve bearings / Ball bearings	Input power	Nominal speed	Temperature range	Service life L_{10} at 40 °C	at T_{max}
Type	**m³/h**	**CFM**	**V**	**Hz**	**dB(A)**	□/■	**Watts**	**rpm**	**°C**	**Hours**	**Hours**
4650 TZ	125	73,6	**230**	**50**	42	□/	19,0	2 600	-10...+50	37 500	30 000
4656 TZ	125	73,6	**230**	**50**	42	/■	19,0	2 600	-40...+65	37 500	20 000
4600 TZ	140	82,4	**115**	**60**	45	□/	18,0	2 950	-10...+50	40 000	32 500
4606 TZ	140	82,4	**115**	**60**	45	/■	18,0	2 950	-40...+75	40 000	17 500

Subject to alternations

The air flow and noise level of fans without external housing depends on the installation conditions. The stated air flow and noise has been measured with an orifice 109 mm Ø at a distance of approx. 17 mm from the mounting bracket. Under exceptionally favourable mounting conditions, the air flow of fan series 4000 Z is achievable. The noise in the optimal operating range can only be measured for these fans in a specific application.

Fan type		Lead wires
4650 TZ	4600 TZ	AWG 22, TR 32
4656 TZ	4606 TZ	AWG 18

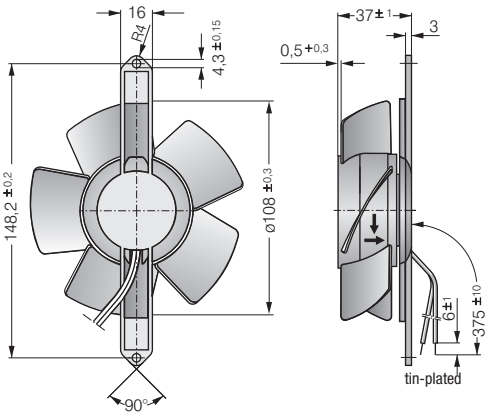

max. 206 m³/h

AC axial fans

Series 5900 127 x 127 x 38 mm

- **Material:** Housing: Die-cast aluminium
  Impeller: GRP[1)] (PA)
- **Direction of air flow:** Exhaust over struts
- **Direction of rotation:** Counter-clockwise, seen on rotor
- **Connection:** Via 2 flat plug 2,8 x 0,5 mm grounding lug for M4 x 6
- **Mass:** 570 g
- **Possible special versions:** (See page 12)
  - Protection against moisture

1) Fibreglass-reinforced plastic

Nominal data	Air flow	Air flow	Nominal voltage	Frequency	Sound pressure level	Sound power level	Sintec sleeve bearings / Ball bearings	Input power	Nominal speed	Temperature range	Service life L_{10} at 40 °C	at T_{max}	Curve
Type	**m³/h**	**CFM**	**V**	**Hz**	**dB(A)**	**Bel(A)**	□/■	**Watts**	**rpm**	**°C**	**Hours**	**Hours**	
5988	150	88	**230**	**50**	37	4,9	/■	13,0	2 250	-30...+55	35 000	/ 20 000	①
5950	180	106	**230**	**50**	43	5,4	□/	18,0	2 700	-20...+50	40 000	/ 32 500	③
5958	180	106	**230**	**50**	44	5,5	/■	18,0	2 750	-30...+60	40 000	/ 25 000	③
5938	162	95	**115**	**60**	40	4,9	/■	12,0	2 500	-30...+55	35 000	/ 20 000	②
5900	206	121	**115**	**60**	46	5,7	□/	17,0	3 050	-20...+55	42 500	/ 30 000	④
5908	206	121	**115**	**60**	47	5,8	/■	17,0	3 100	-30...+75	42 500	/ 20 000	④

Subject to alternations

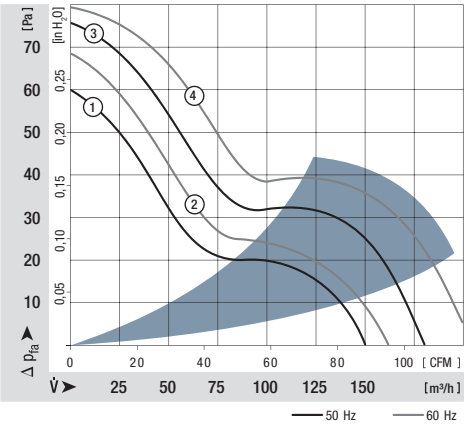

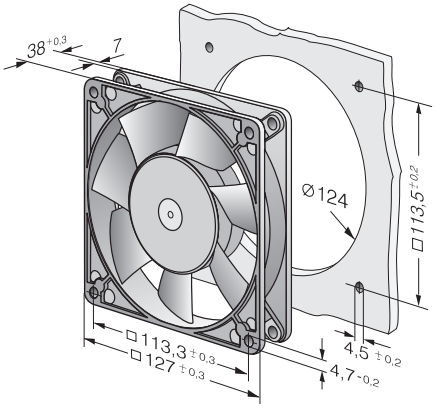

Guard grilles from p. 238

Connection cables p. 251

ebmpapst

max. 270 m³/h

AC axial fans

Series 5600 135 x 135 x 38 mm

- **Material:** Housing: Die-cast aluminium
  Impeller: Painted sheet steel
- **Direction of air flow:** Exhaust over struts
- **Direction of rotation:** Counter-clockwise, seen on rotor
- **Connection:** Via 2 flat plug 2,8 x 0,5 mm
  grounding lug for M4 x 8
- **Mass:** 800 g

- **Possible special versions:**
  (See page 12)
  - Protection against moisture
  - Protection against salt fog
  - Type of protection: IP 54

Nominal data	Air flow	Air flow	Nominal voltage	Frequency	Sound pressure level	Sound power level	Sintec sleeve bearings / Ball bearings	Input power	Nominal speed	Temperature range	Service life L_{10} at 40 °C	at T_{max}	Curve
Type	**m³/h**	**CFM**	**V**	**Hz**	**dB(A)**	**Bel(A)**	**□/■**	**Watts**	**rpm**	**°C**	**Hours**	**Hours**	
5656 S	235	138	**230**	**50**	46	5,9	/■	30,0	2 700	-35...+70	45 000 / 20 000		①
5606 S	270	159	**115**	**60**	50	6,2	/■	26,0	3 100	-35...+80	47 500 / 20 000		②

Subject to alternations

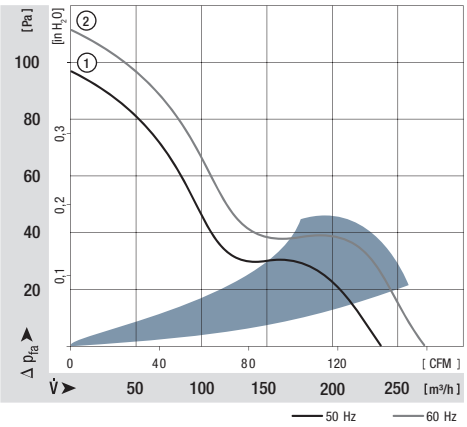

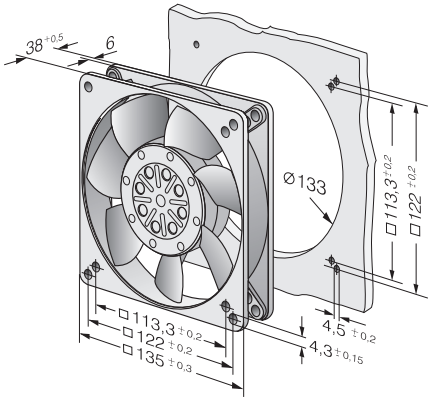

max. 380 m³/h

AC axial fans

Series 7000 150 x 172 x 38 mm

- **Material:** Housing: Die-cast aluminium
  Impeller: Painted sheet steel
- **Direction of air flow:** Exhaust over struts
- **Direction of rotation:** Counter-clockwise, seen on rotor
- **Connection:** Via 2 flat plug 2,8 x 0,5 mm
  grounding lug for M4 x 8
- **Mass:** 900 g
- **Note:**
  Please note our new ACmaxx series. With identical mounting dimensions and voltages, this series achieves higher energy efficiency.
  See page 190, 192, 193

Nominal data	Air flow	Air flow	Nominal voltage	Frequency	Sound pressure level	Sound power level	Sintec sleeve bearings / Ball bearings	Input power	Nominal speed	Temperature range	Service life L_{10} at 40 °C	at T_{max}	Curve
Type	**m³/h**	**CFM**	**V**	**Hz**	**dB(A)**	**Bel(A)**	**□/■**	**Watts**	**rpm**	**°C**	**Hours**	**Hours**	
7056 ES	320	188	**230**	**50**	51	6,4	/■	27,0	2 800	-25...+55	60 000 / 32 000		①
7006 ES	380	224	**115**	**60**	56	6,8	/■	28,0	3 350	-25...+65	55 000 / 18 000		②

Subject to alternations

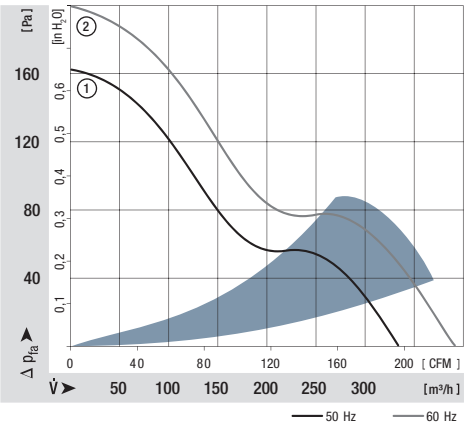

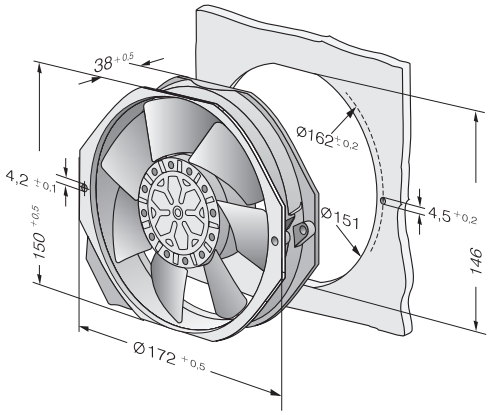

Guard grilles from p. 238

Connection cables p. 251

ebmpapst

max. 380 m³/h

AC axial fans

Series 7800 Ø 150 x 55 mm

- **Material:** Housing: Die-cast aluminium
  Impeller: Painted sheet steel
- **Direction of air flow:** Exhaust over struts
- **Direction of rotation:** Counter-clockwise, seen on rotor
- **Connection:** Via 2 single wires, wire ends with brass lead tips grounding lug for M4 x 8
- **Mass:** 1,1 kg
- **Note:**
  Please note our new ACmaxx series. With identical mounting dimensions and voltages, this series achieves higher energy efficiency. See page 190

Nominal data	Air flow	Air flow	Nominal voltage	Frequency	Sound pressure level	Sound power level	Sintec sleeve bearings / Ball bearings	Input power	Nominal speed	Temperature range	Service life L_{10} at 40 °C	at T_{max}	Curve
Type	**m³/h**	**CFM**	**V**	**Hz**	**dB(A)**	**Bel(A)**	□/■	**Watts**	**rpm**	**°C**	**Hours**	**Hours**	
7855 ES	325	191	**230**	**50**	49	6,0	/■	45,0	2 800	-25...+50	60 000 / 47 500		①
7856 ES	325	191	**230**	**50**	49	6,0	/■	45,0	2 800	-25...+70	60 000 / 30 000		①
7805 ES	380	224	**115**	**60**	53	6,4	/■	38,0	3 250	-25...+70	60 000 / 47 500		②
7806 ES	380	224	**115**	**60**	53	6,4	/■	38,0	3 250	-25...+90	60 000 / 15 000		②

Subject to alternations

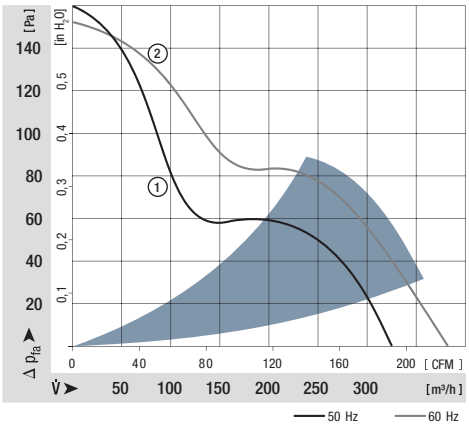

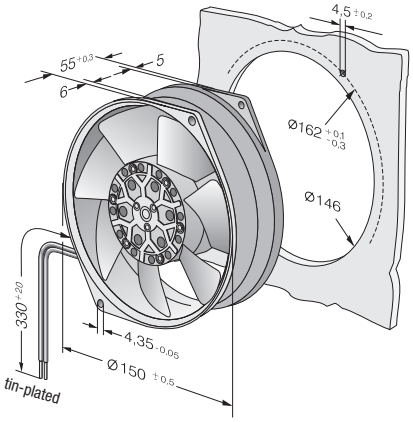

max. 425 m³/h

AC axial fans

Series 7400 Ø 150 x 55 mm

- **Material:** Housing: Die-cast aluminium
  Impeller: Painted sheet steel
- **Direction of air flow:** Exhaust over struts
- **Direction of rotation:** Counter-clockwise, seen on rotor
- **Connection:** Via 2 single wires, wire ends with brass lead tips grounding lug for M4 x 8
- **Mass:** 1,1 kg
- **Note:**
  Please note our new ACmaxx series. With identical mounting dimensions and voltages, this series achieves higher energy efficiency. See page 190

Nominal data	Air flow	Air flow	Nominal voltage	Frequency	Sound pressure level	Sound power level	Sintec sleeve bearings / Ball bearings	Input power	Nominal speed	Temperature range	Service life L_{10} at 40 °C / at T_{max}	Curve
Type	**m³/h**	**CFM**	**V**	**Hz**	**dB(A)**	**Bel(A)**	**□/■**	**Watts**	**rpm**	**°C**	**Hours / Hours**	
7450 ES	380	224	**230**	**50**	60	6,8	/■	47,0	2 700	-25...+50	63 000 / 50 000	①
7400 ES	425	250	**115**	**60**	62	6,9	/■	46,0	3 050	-25...+70	50 000 / 24 000	②

Subject to alternations

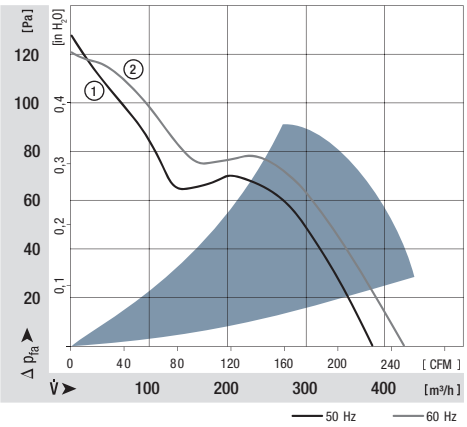

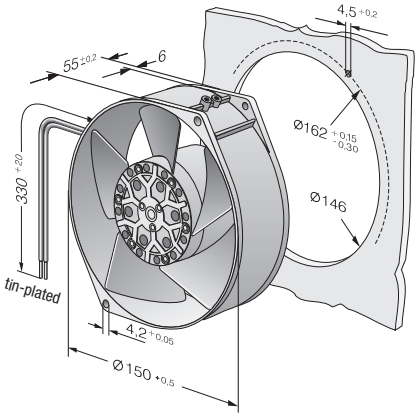

Guard grilles
from p. 238

ebmpapst

max. 500 m³/h

AC axial fans

Series 6000 Ø 172 x 51 mm

- **Material:** Housing: Die-cast aluminium
  Impeller: Painted sheet steel
- **Direction of air flow:** Exhaust over struts
- **Direction of rotation:** Counter-clockwise, seen on rotor
- **Connection:** Via 2 flat plug 2,8 x 0,5 mm
  grounding lug for M4 x 6
- **Mass:** 1,0 kg
- **Note:**
  Please note our new ACmaxx series. With identical mounting dimensions and voltages, this series achieves higher energy efficiency. See page 192,193

Nominal data	Air flow	Air flow	Nominal voltage	Frequency	Sound pressure level	Sound power level	Sintec sleeve bearings / Ball bearings	Input power	Nominal speed	Temperature range	Service life L_{10} at 40 °C	at T_{max}	Curve
Type	**m³/h**	**CFM**	**V**	**Hz**	**dB(A)**	**Bel(A)**	□/■	**Watts**	**rpm**	**°C**	**Hours**	**Hours**	
6058 ES	375	221	**230**	**50**	55	5,9	/■	24,0	2 800	-25...+70	62 000 / 31 000		①
6078 ES	420	247	**230**	**50**	54	6,3	/■	26,0	2 800	-25...+60	62 000 / 39 000		②
6008 ES	440	259	**115**	**60**	60	6,4	/■	26,0	3 300	-25...+70	57 000 / 28 000		③
6028 ES	500	284	**115**	**60**	58	6,7	/■	29,0	3 300	-25...+75	57 000 / 22 000		④

Subject to alternations

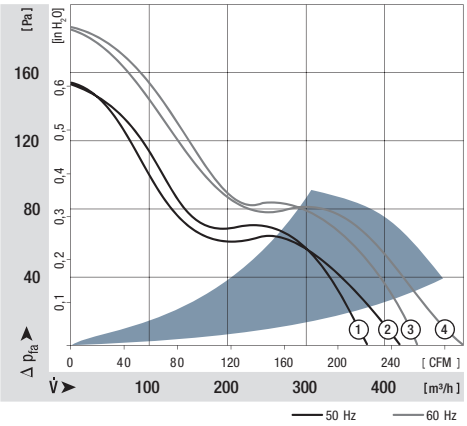

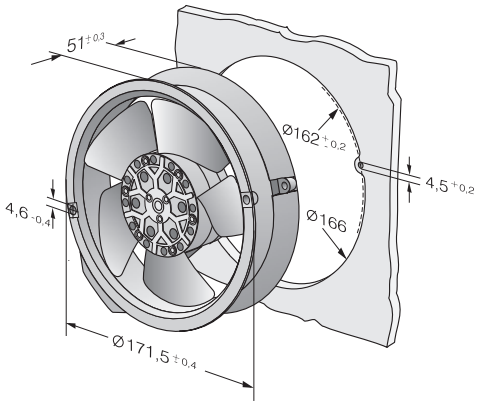

max. 1030 m³/h

AC axial fans

225 x 225 x 80 mm

- **Material:** Housing: Die-cast aluminium
  Impeller: Sheet steel
- **Number of blades:** 7
- **Direction of air flow:** Exhaust over struts
- **Direction of rotation:** Counter-clockwise, seen on rotor
- **Type of protection:** IP44, depending on installation and position
- **Insulation class:** "B"
- **Mounting position:** Any
- **Connection:** Terminal strips (operating capacitor connected)
- **Mass:** 2,0 kg
- **Operation mode:** Continuous operation (S1)
- **Bearings:** Maintenance-free ball bearings

Nominal data	Air flow	Air flow	Nominal voltage	Frequency	Sound pressure level	Sound power level	Sintec sleeve bearings / Ball bearings	Input power	Speed / rpm	Perm. amb. temp.	Service life L_{10} at 40 °C	at T_{max}	Curve
Type	**m³/h**	**CFM**	**V**	**Hz**	**dB(A)**	**Bel(A)**	**□/■**	**Watts**	**rpm**	**°C**	**Hours**	**Hours**	
W2E 200-HK86-01	1030	606	**115**	**60**	61	6,7	/■	80,0	2800	-25...+65	60 000 / 58 000		①
W2E 200-HK38-01	880	518	**230**	**50**	58	6,6	/■	64,0	2550	-25...+60	63 000 / 60 000		①

Subject to alternations

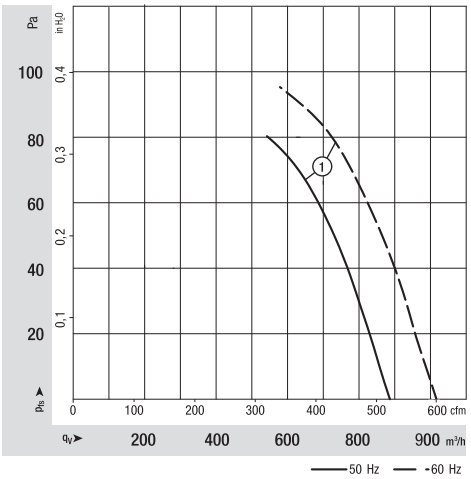

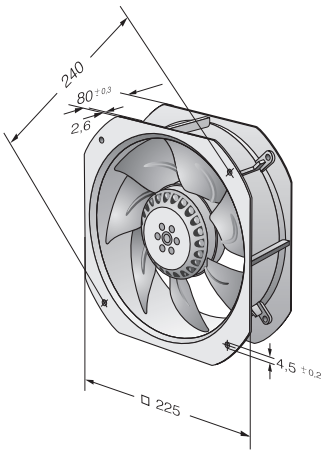

max. 1865 m³/h

AC axial fans

280 x 280 x 80 mm

- **Material:** Housing: Die-cast aluminium
  Impeller: Sheet steel
- **Number of blades:** 7
- **Direction of air flow:** Exhaust over struts
- **Direction of rotation:** Counter-clockwise, seen on rotor
- **Type of protection:** IP44, depending on installation and position
- **Insulation class:** "F"
- **Mounting position:** Any
- **Connection:** Terminal strips (operating capacitor connected)
- **Mass:** 2,0 kg
- **Operation mode:** Continuous operation (S1)
- **Bearings:** Maintenance-free ball bearings

Nominal data	Air flow	Air flow	Nominal voltage	Frequency	Sound pressure level	Sound power level	Sintec sleeve bearings / Ball bearings	Input power	Speed / rpm	Perm. amb. temp.	Service life L_{10} at 40 °C	at T_{max}	Curve
Type	**m³/h**	**CFM**	**V**	**Hz**	**dB(A)**	**Bel(A)**	□/■	**Watts**	**rpm**	**°C**	**Hours**	**Hours**	
W2E 250-HL06-01	1865	1077	**230**	**50**	66	7,2	/■	127,0	2 550	-25...+60	63 000 / 70 000		①

Subject to alternations

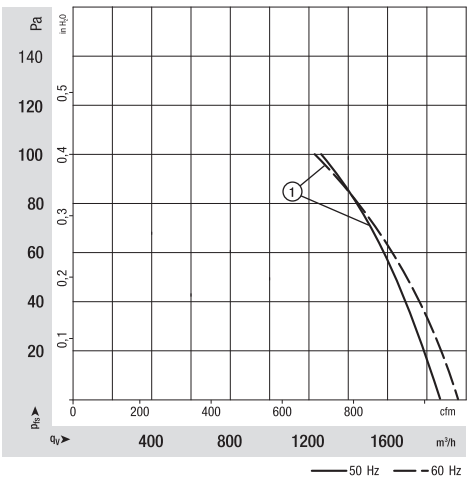

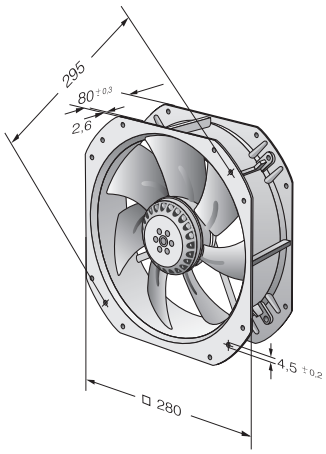

max. 850 m³/h

AC diagonal module

Ø 200 mm

- **Material:** Housing: Plastic PA
  Support bracket: Plastic PA
  Impeller: Plastic PA
  Rotor: Coated in black
- **Number of blades:** 7
- **Direction of air flow:** "V"
- **Direction of rotation:** Clockwise, seen on rotor
- **Type of protection:** IP 44, depending on installation and position
- **Insulation class:** "F"
- **Mounting position:** Any
- **Condensate discharges:** None
- **Operation mode:** Continuous operation (S1)
- **Bearings:** Maintenance-free ball bearings

Nominal data

Type	Motor	Curve	Nominal voltage VAC	Frequency Hz	Air flow m³/h	Speed / rpm rpm	Input power W	Input current A	Capacitor µF/VDB	Sound pressure level dB(A)	Max. back-pressure Pa	Perm. amb. temp. °C	Mass kg	Electrical connection
K2E 200-AA12 -01	M2E 068-CF	A	1~ 115	50	765	2650	64	0,56	6,0/250	64	200	-25..+65	2,1	p. 259 / A1)
		B	1~ 115	60	840	2910	88	0,77	6,0/250	64	240	-25..+65	2,1	

Subject to alternations

Curve:

——— 50 Hz

- - - - - - 60 Hz

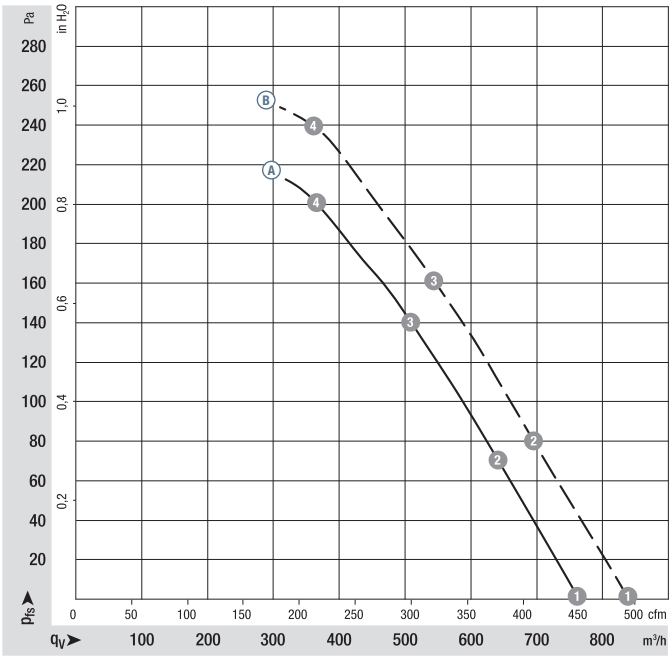

		n rpm	P_{ed} W	I A	L_WA dB(A)
A	1	2650	64	0,56	---
A	2	2610	67	0,59	---
A	3	2580	70	0,61	---
A	4	2590	69	0,61	---
B	1	2910	88	0,77	72
B	2	2815	93	0,81	69
B	3	2755	96	0,84	69
B	4	2780	95	0,83	71

Air performance measured as per: ISO 5801, Installation category A, without protection against accidental contact. Suction-side noise levels: LWA as per ISO 13347, LpA measured at 1 m distance to fan axis. The acoustic values given are only valid under the measurment conditions listed and may vary depending on the installation situation. With any deviation to the standard setup, the specific values have to be checked and reviewed once installed or fitted! For detailed information see http://www.ebmpapst.com/general conditions

ebmpapst

- **Motor protection:** TOP wired internally
- **Touch current:** < 0,75 mA acc. to IEC 60990 (test circuit, illustration 4)
- **Cable exit:** Lateral
- **Electrical connection** Via connector
- **Protection class:** I (if customer has provided connection for protective earth)
- **Product conforming to standards:** EN 60335-1, CE
- **Approvals:** UL 2111, CSA C22.2 Nr. 77

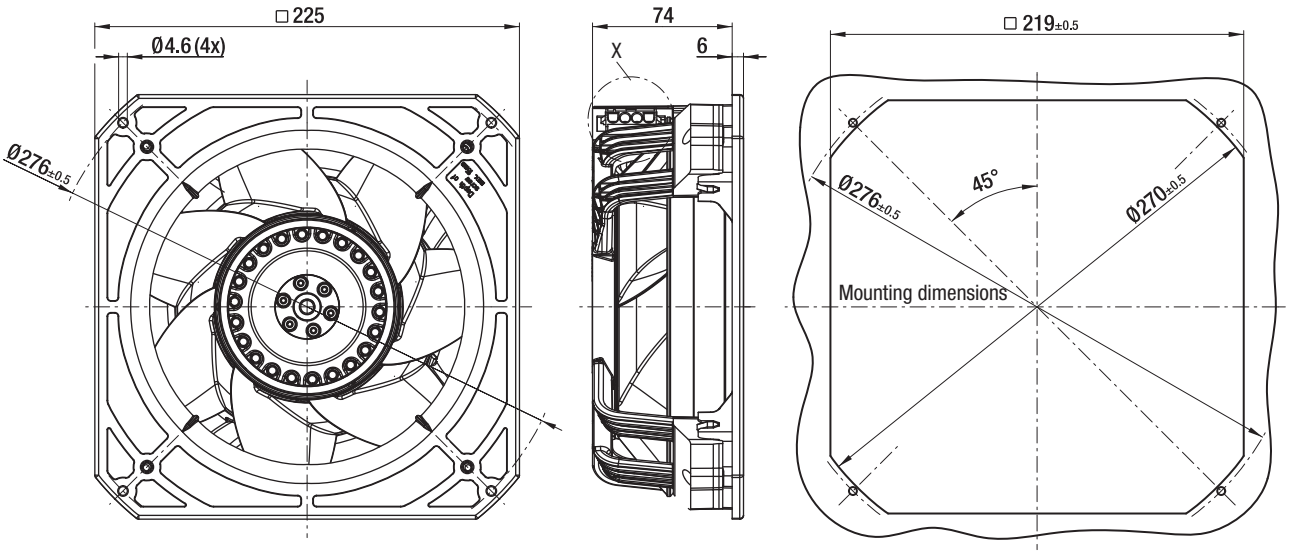

Coded plug system
Universal-Mate-N-Lok
Connector shell: AMP 350 780-1
3 x Pin connector: AMP 926 885-1
Mating connector (not part of delivery):
Connector shell: AMP 350 779-4
3 x female terminal: AMP 926 884-1

View X

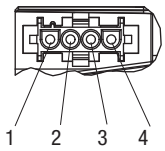

1 = not used
2 = N + condensator
3 = L
4 = PE

max. 850 m³/h

AC diagonal module

Ø 200 mm

- **Material:** Housing: Plastic PA
  Support bracket: Plastic PA
  Impeller: Plastic PA
  Rotor: Coated in black
- **Number of blades:** 7
- **Direction of air flow:** "V"
- **Direction of rotation:** Clockwise, seen on rotor
- **Type of protection:** IP 44, depending on installation and position
- **Insulation class:** "F"
- **Mounting position:** Any
- **Condensate discharges:** None
- **Operation mode:** Continuous operation (S1)
- **Bearings:** Maintenance-free ball bearings

Nominal data

Type	Motor	Curve	Nominal voltage VAC	Frequency Hz	Air flow m³/h	Speed / rpm rpm	Input power W	Input current A	Capacitor µF/VDB	Sound pressure level dB(A)	Max. back-pressure Pa	Perm. amb. temp. °C	Mass kg	Electrical connection
K2E 200-AA52 -02	M2E 068-CF	A	1~ 230	50	765	2650	65	0,30	2,0/400	62	200	-25..+75	2,1	p. 259 / A1)
		B	1~ 230	60	850	2950	90	0,40	2,0/400	62	245	-25..+75	2,1	

Subject to alternations

Curve:

——— 50 Hz

- - - - - - 60 Hz

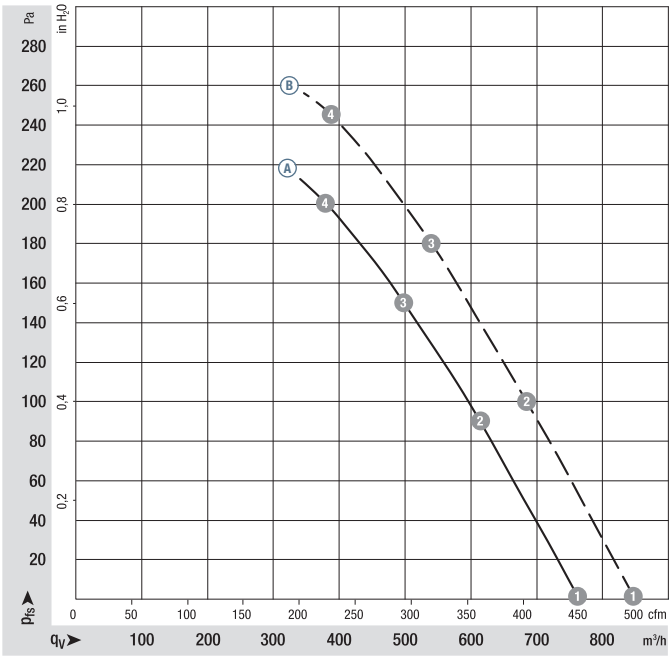

		n rpm	P_{ed} W	I A	L_WA dB(A)
A	1	2650	65	0,30	70
A	2	2620	67	0,30	68
A	3	2605	68	0,30	67
A	4	2610	68	0,30	69
B	1	2950	90	0,40	73
B	2	2865	93	0,41	70
B	3	2820	96	0,42	69
B	4	2840	94	0,41	71

Air performance measured as per: ISO 5801, Installation category A, without protection against accidental contact. Suction-side noise levels: LWA as per ISO 13347, LpA measured at 1 m distance to fan axis. The acoustic values given are only valid under the measurment conditions listed and may vary depending on the installation situation. With any deviation to the standard setup, the specific values have to be checked and reviewed once installed or fitted! For detailed information see http://www.ebmpapst.com/general conditions

ebmpapst

- **Motor protection:** TOP wired internally
- **Touch current:** < 0,75 mA acc. to IEC 60990 (test circuit, illustration 4)
- **Cable exit:** Lateral
- **Electrical connection** Via connector
- **Protection class:** I (if customer has provided connection for protective earth)
- **Product conforming to standards:** EN 60335-1, CE
- **Approvals:** UL 2111, CSA C22.2 Nr. 77

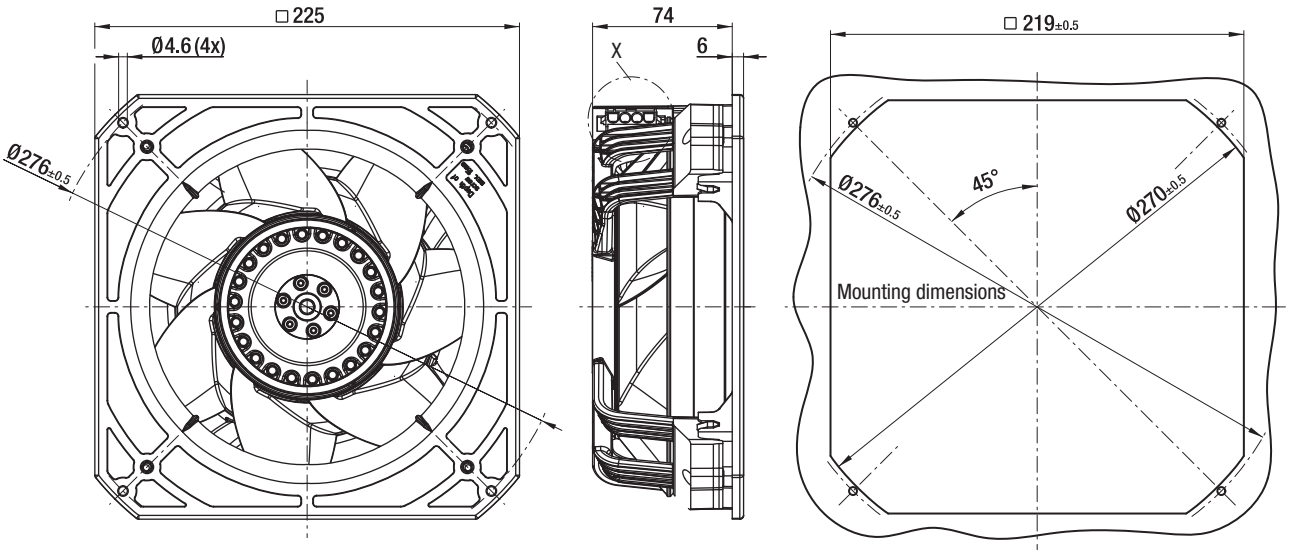

Coded plug system
Universal-Mate-N-Lok
Connector shell: AMP 350 780-1
3 x Pin connector: AMP 926 885-1
Mating connector (not part of delivery):
Connector shell: AMP 350 779-4
3 x female terminal: AMP 926 884-1

View X

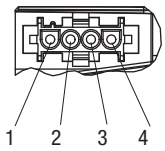

1 = not used
2 = N + condensator
3 = L
4 = PE

max. 880 m³/h

AC diagonal module

Ø 200 mm

- **Material:** Housing: Plastic PA
  Support bracket: Plastic PA
  Impeller: Plastic PA
  Rotor: Coated in black
- **Number of blades:** 7
- **Direction of air flow:** "V"
- **Direction of rotation:** Clockwise, seen on rotor
- **Type of protection:** IP 44, depending on installation and position
- **Insulation class:** "F"
- **Mounting position:** Any
- **Condensate discharges:** None
- **Operation mode:** Continuous operation (S1)
- **Bearings:** Maintenance-free ball bearings

Nominal data

Type	Motor	Curve	Nominal voltage VAC	Frequency Hz	Air flow m³/h	Speed / rpm rpm	Input power W	Input current A	Capacitor µF/VDB	Sound pressure level dB(A)	Max. back-pressure Pa	Perm. amb. temp. °C	Mass kg	Electrical connection
K2D 200-AA02 -02	M2D 068-CF	A	3~ 400 Y	50	780	2700	65	0,15	---	62	210	-25..+75	2,0	p. 259 / C2)
		B	3~ 400 Y	60	880	3050	90	0,16	---	65	260	-25..+75	2,0	

Subject to alternations

Curve:

——— 50 Hz

- - - - - - 60 Hz

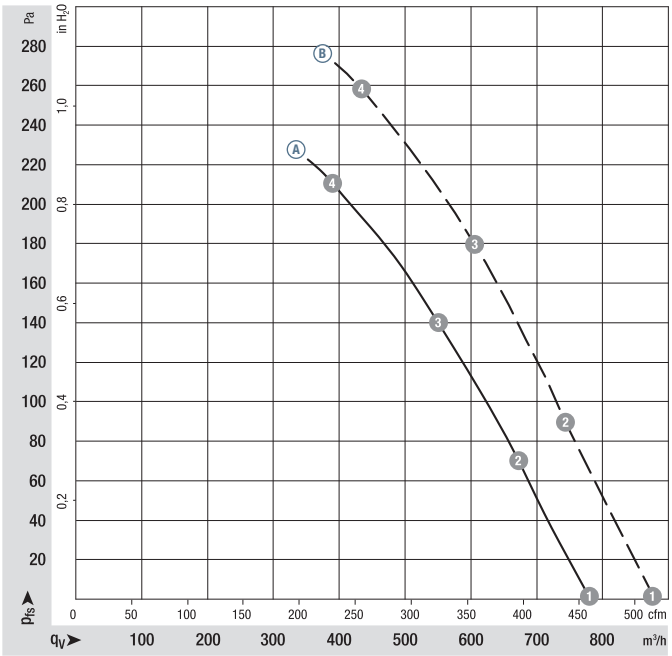

		n rpm	P_{ed} W	I A	L_WA dB(A)
A	1	2700	65	0,15	71
A	2	2695	69	0,16	69
A	3	2675	71	0,16	68
A	4	2680	70	0,16	69
B	1	3050	90	0,16	73
B	2	3010	94	0,16	71
B	3	2970	98	0,17	70
B	4	2975	96	0,17	72

Air performance measured as per: ISO 5801, Installation category A, without protection against accidental contact. Suction-side noise levels: LWA as per ISO 13347, LpA measured at 1 m distance to fan axis. The acoustic values given are only valid under the measurment conditions listed and may vary depending on the installation situation. With any deviation to the standard setup, the specific values have to be checked and reviewed once installed or fitted! For detailed information see http://www.ebmpapst.com/general conditions

ebmpapst

- **Motor protection:** TOP wired internally
- **Touch current:** < 0,75 mA acc. to IEC 60990 (test circuit, illustration 4)
- **Cable exit:** Lateral
- **Electrical connection** Via connector
- **Protection class:** I (if customer has provided connection for protective earth)
- **Product conforming to standards:** EN 60335-1, CE

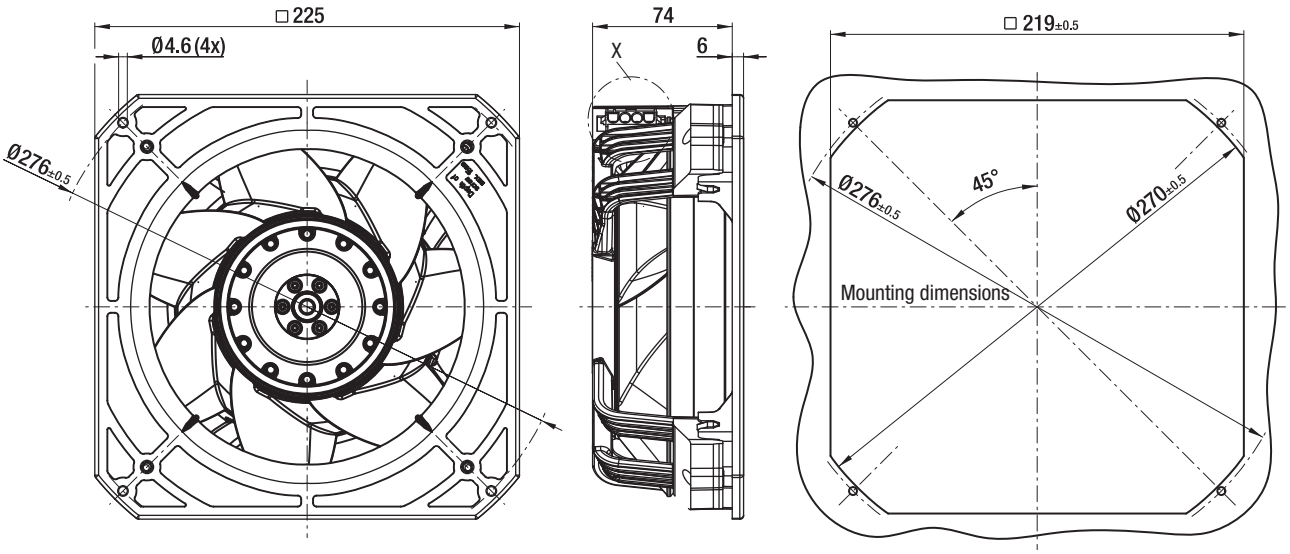

Coded plug system
Universal-Mate-N-Lok
Connector shell: AMP 350 780-1
3 x Pin connector: AMP 926 885-1
Mating connector (not part of delivery):
Connector shell: AMP 350 779-4
3 x female terminal: AMP 926 884-1

View X

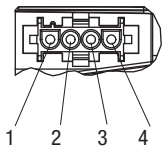

1 = L3
2 = L1
3 = L2
4 = PE

AC centrifugal fans

AC centrifugal fan overview 229
AC centrifugal fans 230

AC centrifugal fans

Technical information

Product line
The renowned ebm-papst AC fans are used when DC voltage is not available. The AC range of fans is based on experience gained from decades of development activity, millions of units in series production and competence in innovation of a world-wide technological leader.

A wide range of fans for AC operation is presented in this catalogue. In addition to complete device fans, you will also find fans without external housing, providing a particularly economical advantage when the air duct can be integrated in the respective device.

Variety of sizes
AC fans are available in a variety of sizes with either air exhaust or air intake over struts. Silent running models with sleeve bearings (or for extreme ambient conditions) fans with ball bearings are available. Electrical connection with plug connection or external leads are available.

Shaded-pole or capacitor motors
Fan drives by shaded-pole or capacitor motors, most of which incorporate the world-famous ebm-papst external rotor principle: The fan blades are directly attached to the external rotor of the external rotor motor, thus combining both high performance and profitability.

Flat built AC fans
ebm-papst also has particularly flat built AC fans with internal rotor motor. Their advantage: quick start to full speed. A plastic impeller and the both smaller and lighter internal rotor motor lead to a lower moment of inertia.

Bearings
AC fans with sleeve bearings are powered by Class E insulated motors. Fans with ball bearings are equipped with Class B, E or F insulated motors.

Type of protection
All ebm-papst fans conform to the requirements of IP 20. Fans conforming to IP 54 / IP 68 and special types of protection are also available.

AC voltage
The line of AC fans for Euro voltage according to IEC 60038 (230 V ± 10 %) is basically also available for 115 V.

Frequencies
AC fans can be operated at frequencies of 50 Hz or 60 Hz. However, their technical data then change accordingly.

Capacitor
Fans driven by capacitor external motors provide particularly high operating efficiency. Generally, the required operating capacitor is already integrated in the fan housing.

Overloading
Almost all AC fans are protected against overloading (e.g. due to locked rotor) the drive motors are either impedance protected (marked “Impedance protected”, and/or “Z.P.”) or are equipped with a thermal switch (marked “Thermally protected” or “Th.P.”). The model designation of these fans ends with “S”.

Centrifugal fans for AC operation

Overview of air performance

Dimension	Series	Air flow	Page
mm		m³/h	
□ 121 x 37	RL 90	40...42	230
□ 135 x 38	RG 90	47...54	231
□ 180 x 40	RG 125	86...94	232
□ 220 x 56	RG 160	202...223	233
Ø 138 x 40	RER 125	104...115	234
Ø 176 x 54	RER 160	234...274	235

Subject to alternations

Overview of technically feasible designs

Dimension	VDE, UL, CSA	Sintec sleeve bearings/ ball bearings	Speed signal	Humidity protection	IP >= IP 54	IP >= IP 68	Salt fog protection	Page
Centrifugal fans								
Series	**mm**		**OPTIONAL**					**p.**
RL 90	121 x 121 x 37	ja	□/■	–	•	•	–	•	230
RG 90	135 x 135 x 38	ja	□/■	–	•	•	–	•	231
RG 125	180 x 180 x 40	ja	■	–	•	•	–	•	232
RG 160	220 x 220 x 56	ja	■	–	•	•	–	•	233
RER 125	138 Ø x 40	ja	■	–	•	•	–	•	234
RER 160	176 Ø x 54	ja	■	–	•	•	–	•	235

Subject to alternations

• availabe – not yet available □ Sleeve bearings ■ Ball bearings

max. 42 m³/h

AC centrifugal fans

Series RL 90 121 x 121 x 37 mm

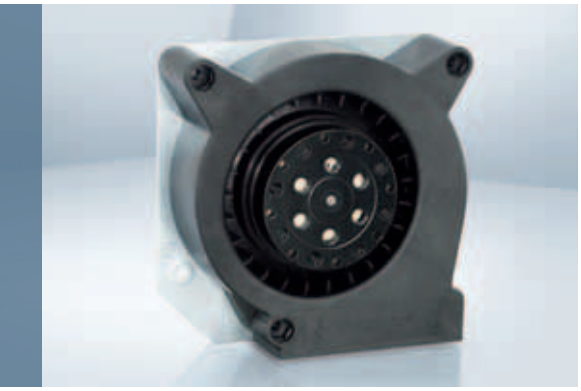

- **Material:** Spiral housing: GRP[1] (PBT)
  Impeller: GRP[1] (PA)
  Housing base: Steel plate
- **Direction of air flow:** Centrifugal: Air outlet via window in housing
- **Direction of rotation:** Clockwise, seen on rotor
- **Connection:** Via 2 single wires; housing base with flat plugs 6,3 x 0,8 mm for protective earth conductor
- **Highlights:** forwards-curved impeller
- **Mass:** 680 g

1) Fibreglass-reinforced plastic

- **Possible special versions:**
  (See page 12)
  - Protection against moisture
  - Protection against salt fog
  - Type of protection: IP 54

Nominal data	Air flow	Air flow	Nominal voltage	Frequency	Sound power level	Sintec sleeve bearings / Ball bearings	Input power	Nominal speed	Temperature range	Service life L_{10} at 40 °C / at T_{max}	Curve
Type	**m³/h**	**CFM**	**V**	**Hz**	**Bel(A)**	□/■	**Watts**	**rpm**	**°C**	**Hours / Hours**	
RL 90-18/50	40	23,5	**230**	**50**	5,6	□/	20,0	2 450	-10...+50	37 500 / 30 000	①
RL 90-18/56	40	23,5	**230**	**50**	5,6	/■	20,0	2 450	-30...+70	37 500 / 20 000	①
RL 90-18/00	42	24,7	**115**	**60**	6,0	□/	19,5	2 550	-10...+60	37 500 / 25 000	②
RL 90-18/06	42	24,7	**115**	**60**	6,0	/■	19,5	2 550	-30...+85	37 500 / 15 000	②

Subject to alternations

Fan type		Lead wires
RL 90-18/50	RL 90-18/00	AWG 18, TR 32
RL 90-18/56	RL 90-18/06	AWG 22

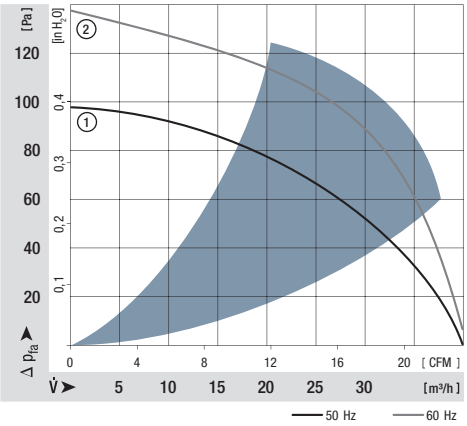

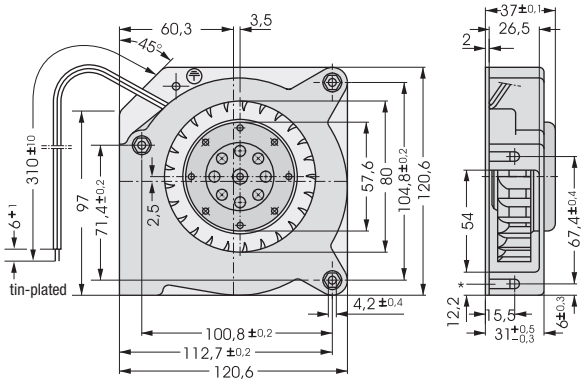

*Speed nut M4 or 8-32UNC. Screw- in depth max.12,5 min 9,0

ebmpapst

max. 54 m³/h

AC centrifugal fans

Series RG 90 135 x 135 x 38 mm

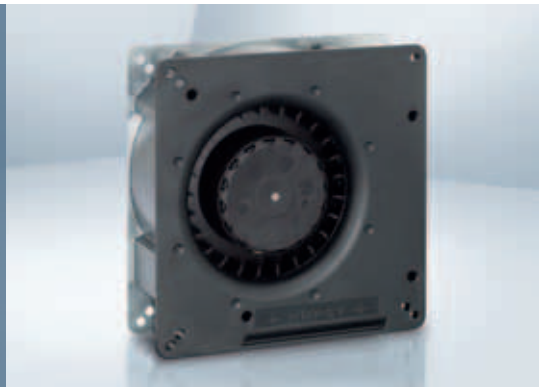

- **Material:** Spiral housing: GRP[1)] (PBT)
  Impeller: GRP[1)] (PA)
  Housing base: Steel plate
- **Direction of air flow:** Centrifugal: Air outlet via window in housing
- **Direction of rotation:** Clockwise, seen on rotor
- **Connection:** Via 2 single wires AWG 22
- **Highlights:** forwards-curved impeller
- **Mass:** 560 g

- **Possible special versions:**
  (See page 12)
  - Protection against moisture
  - Protection against salt fog
  - Type of protection: IP 54

1) Fibreglass-reinforced plastic

Nominal data	Air flow	Air flow	Nominal voltage	Frequency	Sound power level	Sintec sleeve bearings / Ball bearings	Input power	Nominal speed	Temperature range	Service life L_{10} at 40 °C	at T_{max}	Curve
Type	**m³/h**	**CFM**	**V**	**Hz**	**Bel(A)**	□/■	**Watts**	**rpm**	**°C**	**Hours**	**Hours**	
RG 90-18/50	54	32	**230**	**50**	5,8	□/	22,0	2 200	-30...+60	35 000 / 22 500		①
RG 90-18/56	54	32	**230**	**50**	5,8	/■	22,0	2 200	-30...+60	35 000 / 22 500		①
RG 90-18/00	47	28	**115**	**60**	6,2	□/	22,0	1 900	-30...+65	35 000 / 20 000		②
RG 90-18/06	47	28	**115**	**60**	6,2	/■	22,0	1 900	-30...+65	35 000 / 20 000		②

Subject to alternations

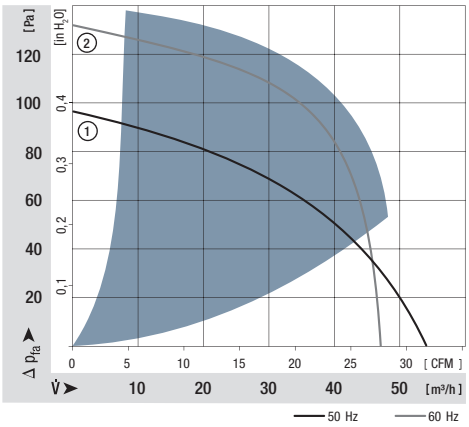

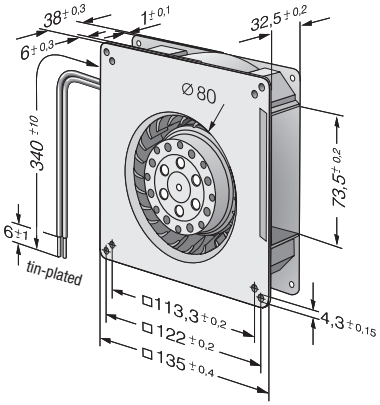

max. 94 m³/h

AC centrifugal fans

Series RG 125 180 x 180 x 40 mm

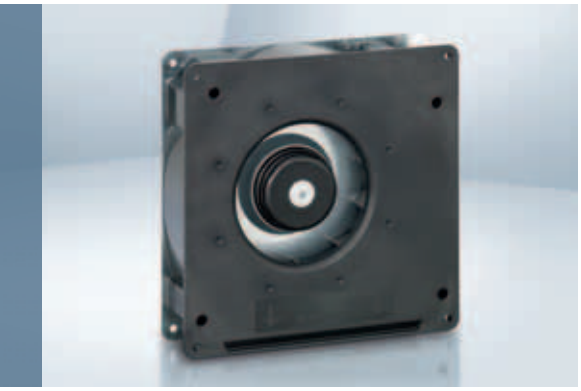

- **Material:** Spiral housing: GRP[1)] (PBT)
  Impeller: GRP[1)] (PA)
  Housing base: Steel plate
- **Direction of air flow:** Centrifugal: Air outlet via window in housing
- **Direction of rotation:** Clockwise, seen on rotor
- **Connection:** Via 2 single wires AWG 22
- **Highlights:** backwards-curved impeller
- **Mass:** 850 g

- **Possible special versions:**
  (See page 12)
  - Protection against moisture
  - Protection against salt fog
  - Type of protection: IP 54

1) Fibreglass-reinforced plastic

Nominal data	Air flow	Air flow	Nominal voltage	Frequency	Sound power level	Sintec sleeve bearings / Ball bearings	Input power	Nominal speed	Temperature range	Service life L_{10} at 40 °C / at T_{max}	Curve
Type	**m³/h**	**CFM**	**V**	**Hz**	**Bel(A)**	**□/■**	**Watts**	**rpm**	**°C**	**Hours / Hours**	
RG 125-19/56	86	51	**230**	**50**	5,8	/■	20,0	2 550	-30...+70	37 500 / 20 000	①
RG 125-19/06	94	55	**115**	**60**	6,0	/■	19,0	2 750	-30...+80	40 000 / 15 000	②

Subject to alternations

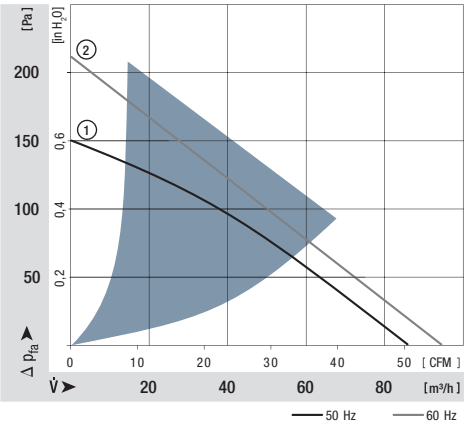

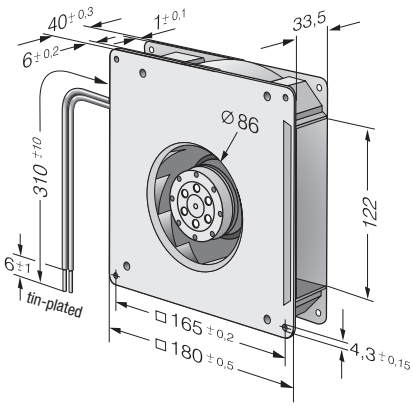

Guard grilles
from p. 238

ebmpapst

max. 223 m³/h

AC centrifugal fans

Series RG 160 220 x 220 x 56 mm

- **Material:** Spiral housing: GRP[1)] (PBT)
  Impeller: GRP[1)] (PA)
  Housing base: Steel plate
- **Direction of air flow:** Centrifugal: Air outlet via window in housing
- **Direction of rotation:** Counter-clockwise, seen on rotor
- **Connection:** Via 2 single wires AWG 18
- **Highlights:** backwards-curved impeller
- **Mass:** 1,7 kg

- **Possible special versions:**
  (See page 12)
  - Protection against moisture

1) Fibreglass-reinforced plastic

Nominal data	Air flow	Air flow	Nominal voltage	Frequency	Sound power level	Sintec sleeve bearings / Ball bearings	Input power	Nominal speed	Temperature range	Service life L_{10} at 40 °C	at T_{max}	Curve
Type	**m³/h**	**CFM**	**V**	**Hz**	**Bel(A)**	□/■	**Watts**	**rpm**	**°C**	**Hours**	**Hours**	
RG 160-28/56S	202	119	**230**	**50**	6,6	/■	47,0	2 750	-30...+70	30 000 / 15 000		①
RG 160-28/06S	223	131	**115**	**60**	6,9	/■	50,0	3 050	-30...+80	27 500 / 12 500		②

Subject to alternations

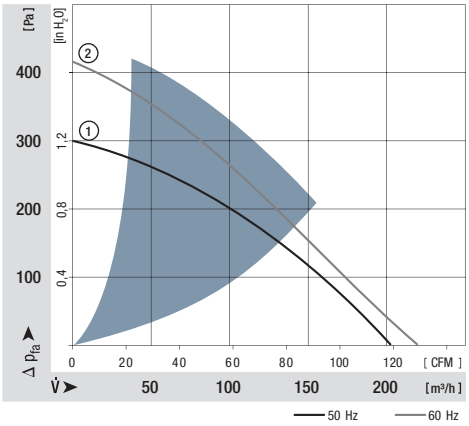

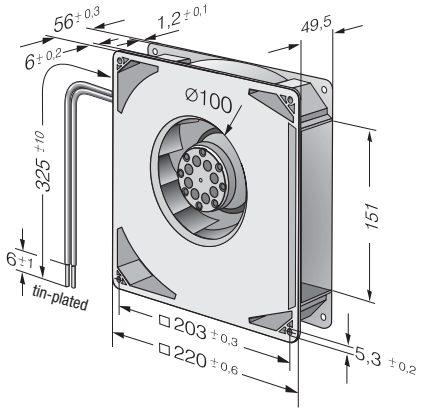

Guard grilles
from p. 238

max. 115 m³/h

AC centrifugal fans

Series RER 125 138 Ø x 40 mm

- **Material:** Spiral housing: GRP[1)] (PBT)
  Impeller: GRP[1)] (PA)
  with steel plate reinforced
- **Direction of air flow:** centrifugal
- **Direction of rotation:** Clockwise, seen on rotor
- **Connection:** Via 2 single wires AWG 22
- **Highlights:** backwards-curved impeller
- **Mass:** 500 g

- **Possible special versions:**
  (See page 12)
  - Protection against moisture
  - Protection against salt fog
  - Type of protection: IP 54

1) Fibreglass-reinforced plastic

Nominal data	Air flow	Air flow	Nominal voltage	Frequency	Sound power level	Sintec sleeve bearings / Ball bearings	Input power	Nominal speed	Temperature range	Service life L_{10} at 40 °C	at T_{max}	Curve
Type	**m³/h**	**CFM**	**V**	**Hz**	**Bel(A)**	□/■	**Watts**	**rpm**	**°C**	**Hours**	**Hours**	
RER 125-19/56	104	61	**230**	**50**	6,2	/■	19,0	2 600	-30...+60	37 500 / 22 500		①
RER 125-19/06	115	68	**115**	**60**	6,5	/■	18,0	2 850	-30...+70	40 000 / 20 000		②

Subject to alternations

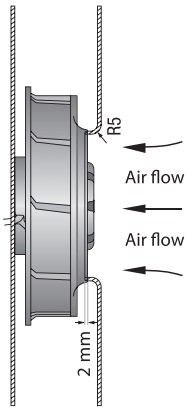

The air flow and noise level of fans without external housing depend on the installation conditions. The stated air flow and noise levels have been measured under the following conditions:
Centrifugal fan mounted on a base plate 220 x 220 mm.
Cover plate 220 x 220 mm with an air inlet of Ø 86 mm, concentric to the impeller.

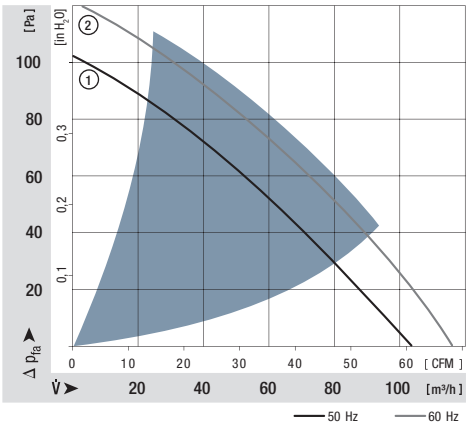

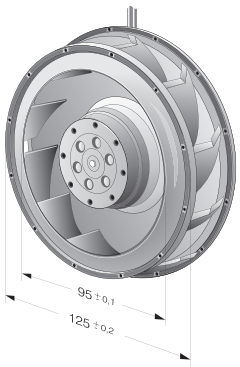

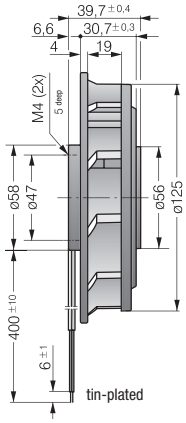

max. 274 m³/h

AC centrifugal fans

Series RER 160 176 Ø x 54 mm

- **Material:** Spiral housing: GRP[1)] (PBT)
  Impeller: GRP[1)] (PA)
  with steel plate reinforced
- **Direction of air flow:** centrifugal
- **Direction of rotation:** Counter-clockwise, seen on rotor
- **Connection:** Via 2 single wires AWG 18
- **Highlights:** backwards-curved impeller
- **Mass:** 1,0 kg

- **Possible special versions:**
  (See page 12)
  - Protection against moisture

1) Fibreglass-reinforced plastic

Nominal data	Air flow	Air flow	Nominal voltage	Frequency	Sound power level	Sintec sleeve bearings / Ball bearings	Input power	Nominal speed	Temperature range	Service life L_{10} at 40 °C	at T_{max}	Curve
Type	**m³/h**	**CFM**	**V**	**Hz**	**Bel(A)**	□/■	**Watts**	**rpm**	**°C**	**Hours**	**Hours**	
RER 160-28/56S	234	138	**230**	**50**	6,6	/■	45,0	2 800	-30...+60	30 000 / 20 000		①
RER 160-28/06S	274	161	**115**	**60**	6,8	/■	46,0	3 250	-30...+70	30 000 / 15 000		②

Subject to alternations

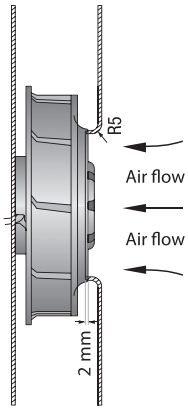

The air flow and noise level of fans without external housing depend on the installation conditions. The stated air flow and noise levels have been measured under the following conditions:
Centrifugal fan mounted on a base plate 260 x 260 mm.
Cover plate 260 x 260 mm with an air inlet of Ø 100 mm, concentric to the impeller.

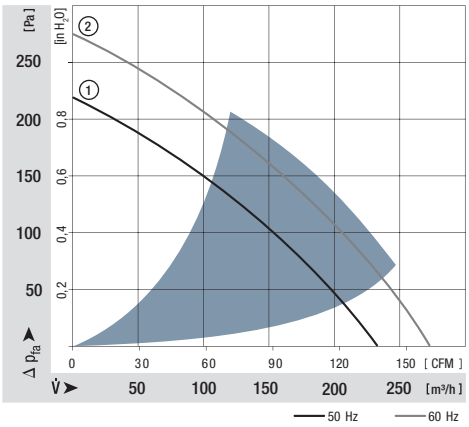

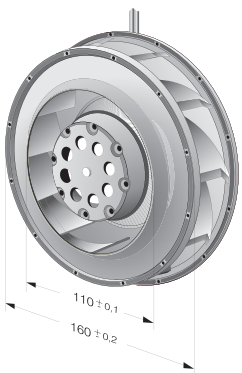

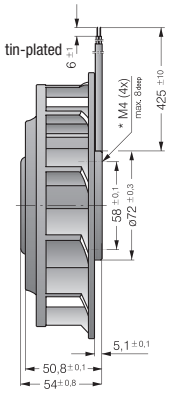

Accessories

Guard grilles	**238**
Fan filter guard grilles	**246**
Inlet nozzles	**248**
Connection cables / Accessories	**251**
Electrical connections	**254**

Everything that you need for your fan. ebm-papst provides an extensive range of accessories for optimum fan operation: From temperature sensing for speed-controlled fans to finger guards of all types, connecting cable, filter, screens, spacers and assembly parts. In addition to the accessories and assembly parts listed in this catalogue, ebm-papst also supplies numerous special parts for fan operation. The sales experts at ebm-papst will be happy to assist you in your enquiries concerning fan assembly and application.

From selection to accessories: Insist on the efficient and reliable service provided by ebm-papst.

Guard grilles

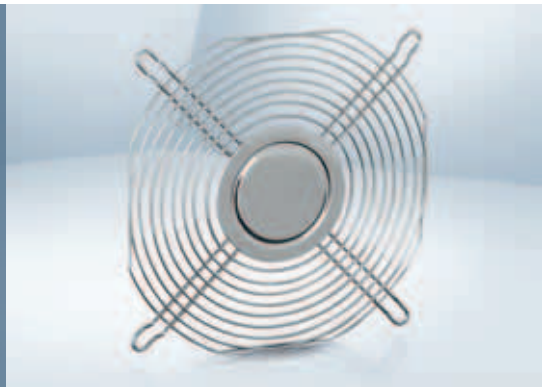

- **Material:** Zinc-plated or nickel-plated steel wire
- **Note:** Safety grille in line with DIN EN ISO 13857 (previously EN 294).
  Additional safety grilles that do not meet DIN EN ISO 13857 can be delivered on request.
  Our safety grilles are designed specifically for use with ebm-papst fans.
  They combine the highest degree of safety with minimum effect on operating noise. Please note that safety-relevant clearances cannot be guaranteed when using safety grilles from other manufacturers.

Fan series	Guard grilles
400	LZ29-1
420 J	LZ29-1
500	LZ31
600	LZ28-1
3000	LZ23-1
8000	LZ32-4 / LZ22-2
9000	LZ30-4 / LZ 30 / LZ 30-3
4000	LZ30-4 / LZ 30 / LZ 30-3

Fan series	Guard grilles
5100	LZ25
5600	LZ25
5200	LZ35
5300	LZ53
5900	LZ35
7000	LZ36
6300	LZ37
6400	LZ38

Fan series	Guard grilles	
2200 F	LZ22	
DV 4100	LZ30-4	Intake-/Outlet side
DV 5200	LZ35	Intake-/Outlet side
DV 6300	LZ37	Intake side
DV 6300	LZ52	Outlet side
DV 6400	LZ38	Intake side
DV 6400	LZ39	Outlet side

Subject to alternations

LZ29-1 — **Fan size 40 x 40**

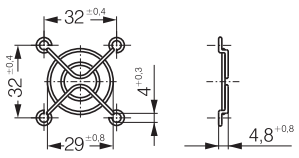

LZ31 — **Fan size 50 x 50**

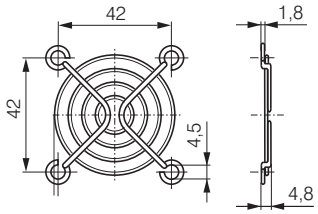

LZ28-1 — **Fan size 60 x 60**

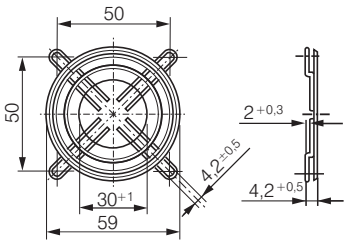

LZ22-2 — **Fan size 80 x 80**

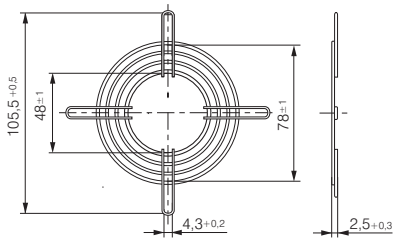

LZ32-4 — **Fan size 80 x 80**

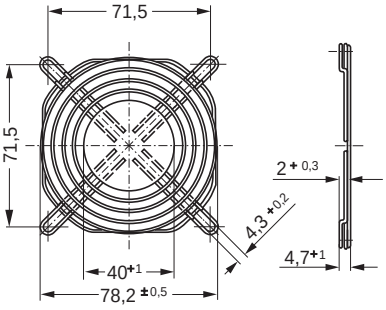

LZ23-1 — **Fan size 92 x 92**

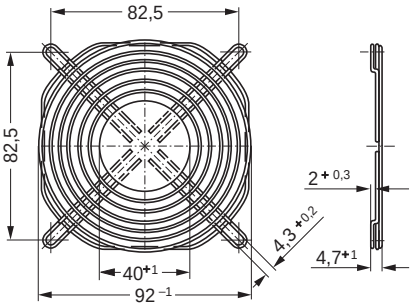

ebmpapst

LZ30 — Fan size 119 x 119

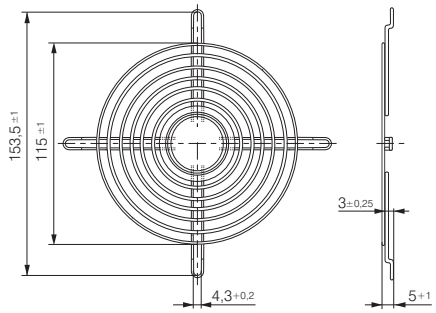

LZ30-3 — Fan size 119 x 119

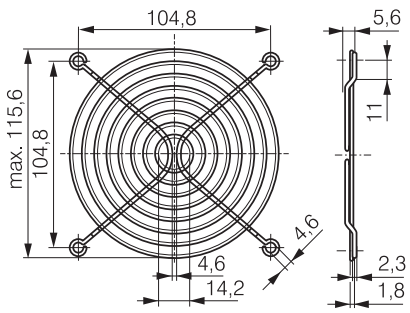

LZ30-4 — Fan size 119 x 119

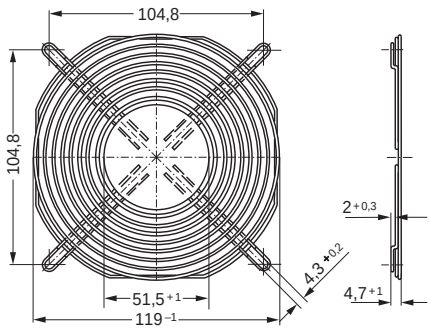

LZ35 — Fan size 127 x 127

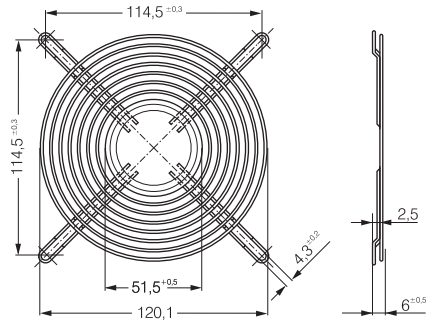

LZ25 — Fan size 135 x 135

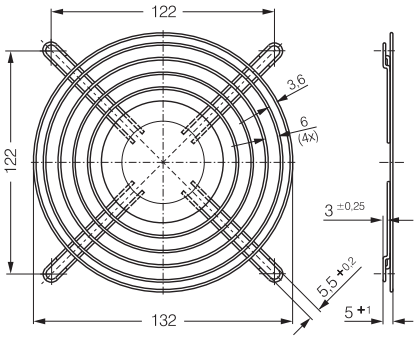

LZ53 — Fan size 140 x 140

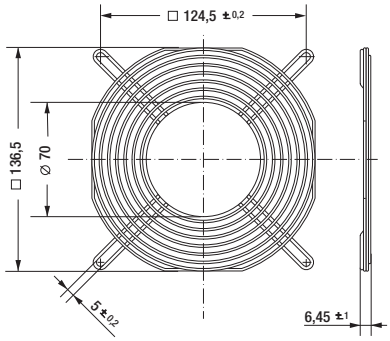

LZ36 — Fan size 150 x 172

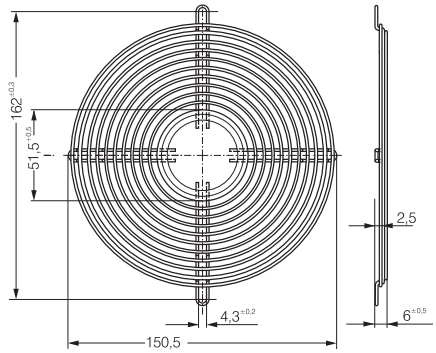

LZ37 — Fan size 172 x 51

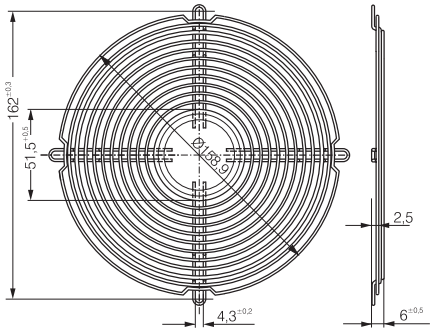

LZ38 — Fan size 172 x 51

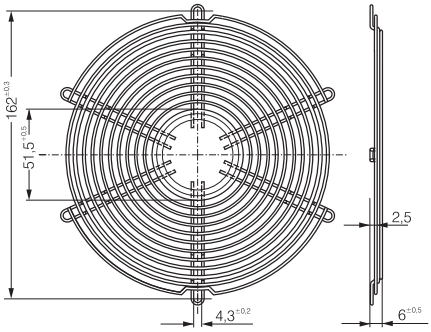

LZ39 — Fan size 172 x 51

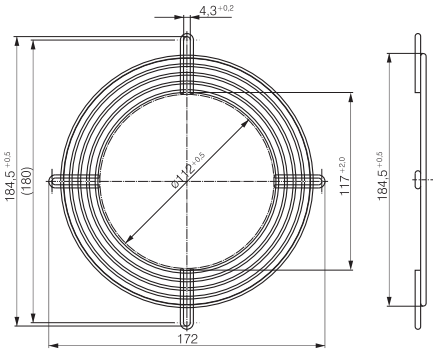

LZ52 — Fan size 172 x 51

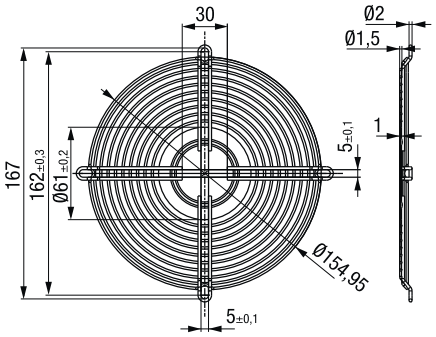

LZ22 — Fan size 200 x 51

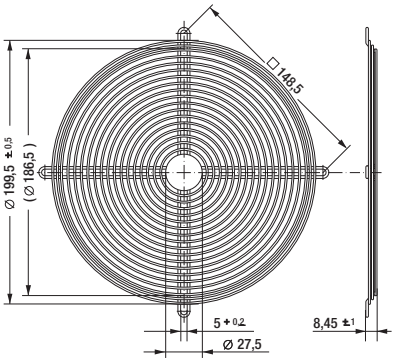

Guard grilles

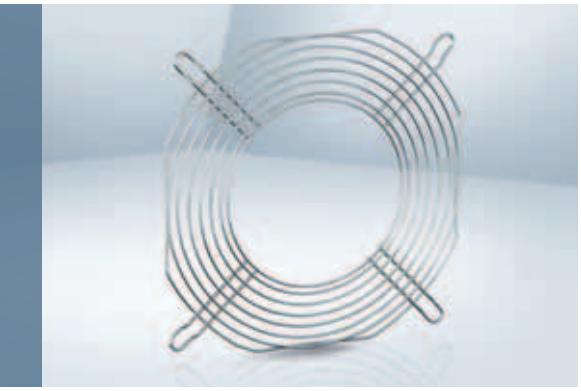

- **Material:** Zinc-plated or nickel-plated steel wire
- **Note:** Safety grille in line with DIN EN ISO 13857 (previously EN 294).
  The safety grilles detailed on this page are intended specifically for the ACmaxx / GreenTech EC compact fan ranges and are mounted on the pressure side.

Fan series	Guard grilles	
AC 8300	LZ32-4	Intake side
AC 8300 H	LZ32-7	Outlet side
AC 3200 J	LZ23-1	Intake side
AC 3200 J	LZ23-6	Outlet side
AC 4400 FN	LZ30-4	Intake side
AC 4400 FN	LZ30-9	Outlet side
AC 4300	LZ30-4	Intake side
AC 4300	LZ30-9	Outlet side

Fan series	Guard grilles	
ACi 4400	LZ30	Intake side
ACi 4400	LZ30	Outlet side
AC 6200 N	LZ37	Intake side
AC 6200 N	LZ37-2	Outlet side
AC 6100 N	LZ37	Intake side
AC 6100 N	*	Outlet side

* Outlet-side grilles on request

LZ30-9 — **Fan size 119 X 119**

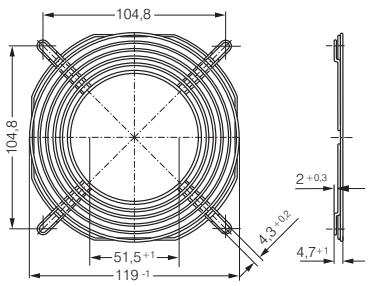

LZ37-2 — **Fan size Ø 172 X 51**

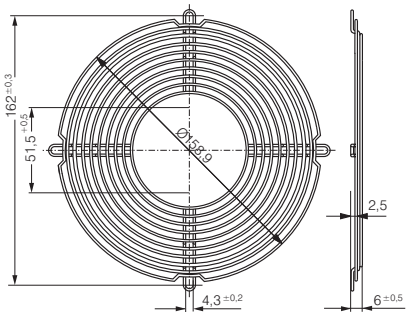

LZ23-6 — **Fan size 92 x 92**

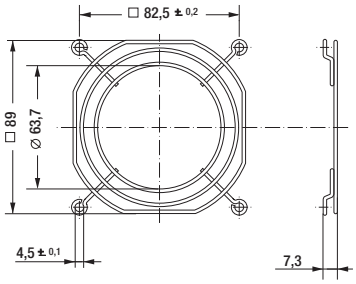

LZ32-7 — **Fan size 80 x 80**

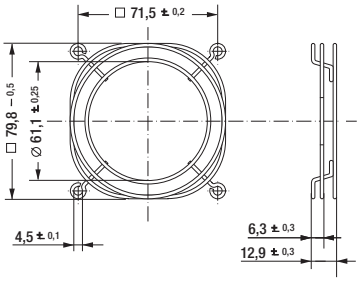

ebmpapst

Guard grilles

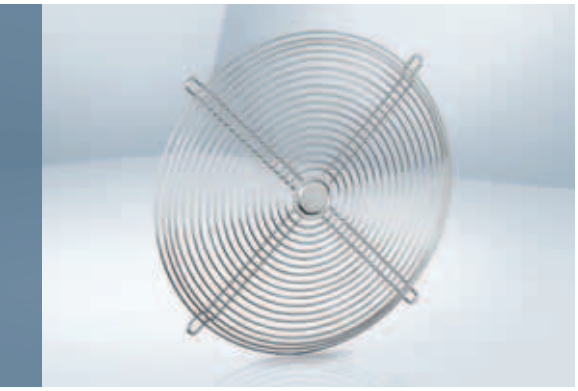

– **Material:** Steel wire, plastic-coated, silver-metallic gloss

Fan series	Guard grilles
W1G 200	78128-2-4039
W2E 200	78128-2-4039

Fan series	Guard grilles
W1G 250	09418-2-4039
W2E 250	09418-2-4039

78128-2-4039 **Size 200**

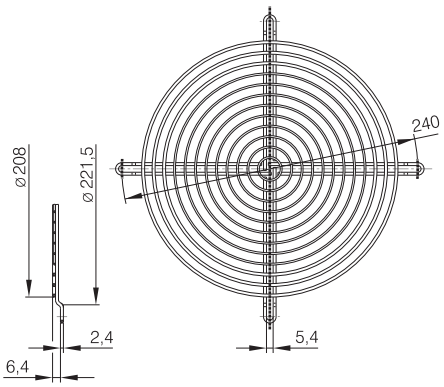

09418-2-4039 **Size 250**

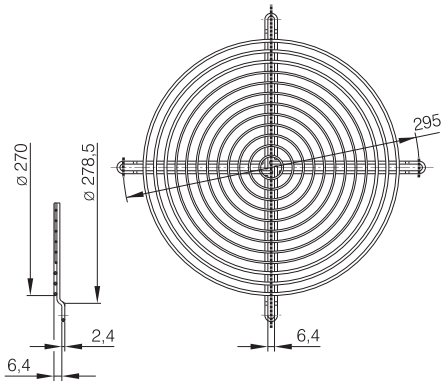

Guard grilles

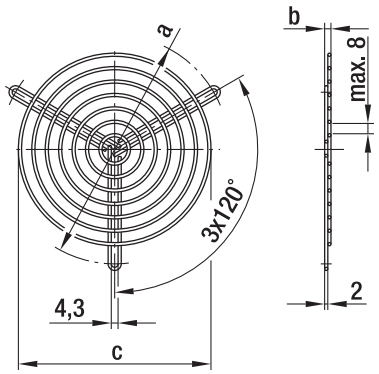

– **Material:** Steel wire

Guard grilles for centrifugal blowers with dual inlet

Part no.	Size	a	b	c	Coating
83319-2-4039	097 (1)	96,0	3,5	71,0	phosphated, plastic-coated in RAL no. 9005
09485-2-4039	097 (2)	114,0	3,5	88,0	phosphated, plastic-coated in RAL no. 9005
09500-2-4039	133 / 146	145,0	4,0	122,0	phosphated, plastic-coated in RAL no. 9005

Subject to alternations (1) for D2E097-CH (2) for D2E097-B*

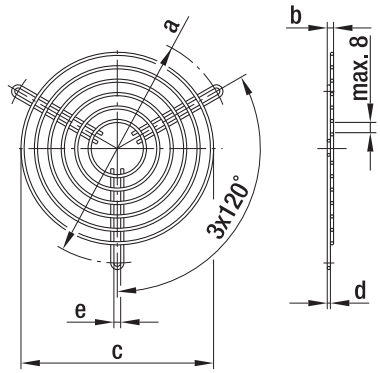

– **Material:** Phosphated steel wire, plastic-coated, silver-metallic gloss

Guard grilles for centrifugal blowers with dual inlet (versions with EW motor)

Part no.	Size	a	b	c	d	e
35000-2-4039	160	182,0	12,0	144,0	2,4	4,5

Subject to alternations

Guard grilles

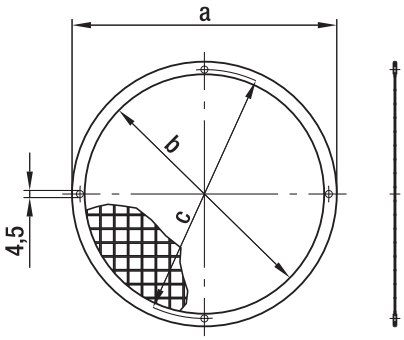

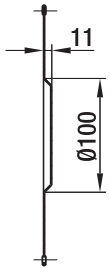

(4) Size 160

– **Material:** Welded grille made of galvanised steel, frame made of tinned sheet iron 0.4 mm thick

Guard grilles for centrifugal blowers with single inlet

Part no.	Size	a	b	c
09489-2-4039	085 (3)	90,0	74,0	84,0
09490-2-4039	108	126,0	110,0	118,0
09494-2-4039	120	140,0	124,0	132,0
09492-2-4039	140 / 146	168,0	152,0	158,0
09503-2-4039	160 (4)	183,0	170,0	175,0

Subject to alternations (3) 3 drilled holes staggered by 120°

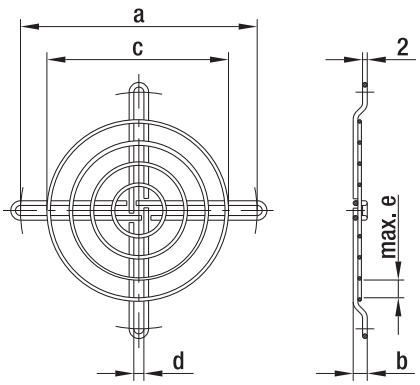

– **Material:** steel wire

Guard grilles for centrifugal blowers with single inlet

Part no.	Size	a	b	c	d	e	Coating
09603-2-4039	076 / 085	101,0	6,0	79,0	4,3	8,0	plastic coated, silver-metallic gloss
98214-2-4039	108	120,0	3,5	88,0	4,3	8,0	plastic coated, silver-metallic gloss
25028-2-4039	140 / 146	162,0	8,5	139,0	4,3	8,0	galvanised, chromatised in blue
17729-2-4039	160	175,0	3,5	139,0	4,6	7,0	galvanised, chromatised in blue

Subject to alternations

Guard grilles

- **Material:** Fibreglass-reinforced plastic
- **Note:** Guard grille acc. to DIN EN ISO 13857 (previously EN 294).
  Plastic grilles must not be used for the following models:
  8200 JH3 / JH4
  3200 JH3 / JH4
  4100 NH5 - NH8

Guard grilles	Mounting	B	C	D	E
LZ28-3	A3	$60^{-0,5}$	$50,0^{\pm 0,2}$	3,0	24
LZ32-2	A1	$80^{-0,5}$	$71,5^{\pm 0,2}$	7,0	34
LZ32-3	A3	$80^{-0,5}$	$71,5^{\pm 0,2}$	7,0	34
LZ23-2	A1	$92,5^{-0,5}$	$82,5^{\pm 0,2}$	6,5	46
LZ23-3	A3	$92,5^{-0,5}$	$82,5^{\pm 0,2}$	6,5	46

Guard grilles	Mounting	B	C	D	E
LZ30-5	A2	$119^{-0,5}$	$105^{\pm 0,2}$	6,5	50
LZ30-6	A4	$119^{-0,5}$	$105^{\pm 0,2}$	6,5	50
LZ33-1	A2	$127^{-0,5}$	$113,5^{\pm 0,2}$	6,5	50
LZ33-2	A4	$127^{-0,5}$	$113,5^{\pm 0,2}$	6,5	50

Subject to alternations

LZ28-3	Size 60 x 60
LZ32-2 / LZ32-3	Size 80 x 80
LZ23-2 / LZ23-3	Size 92 x 92
LZ30-5 / LZ30-6	Size 119 x 119
LZ33-1 / LZ33-2	Size127 x 127

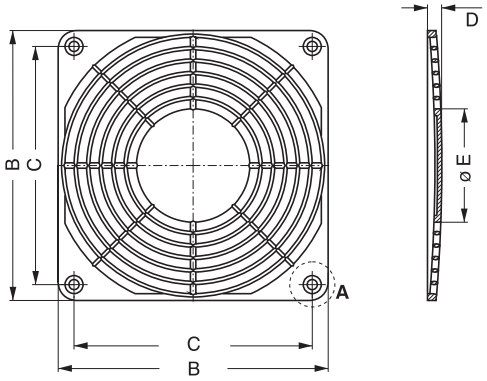

Screw connection

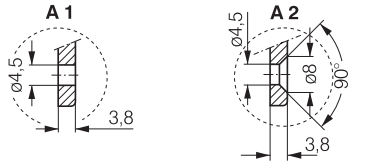

Barbed inserts

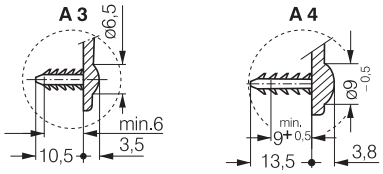

Only suitable for bore hole diameter
¯4,3 - ¯4,7.

LZ28-3	Fan size 60 x 60

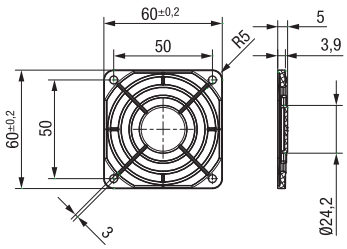

LZ32P	Fan size 80 x 80

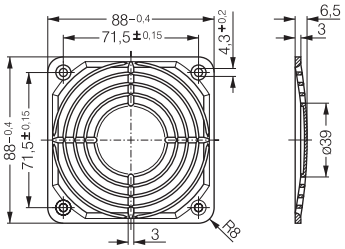

LZ30P	Fan size 119 x 119

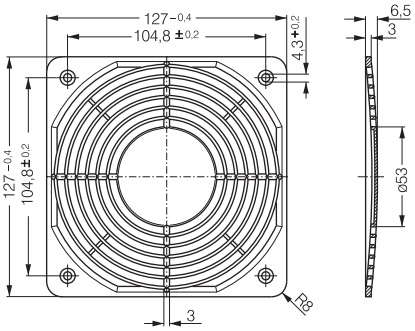

ebmpapst

Guard grilles

for compact centrifugal modules

- **Material:** Fibreglass-reinforced plastic PA
- **Highlights:** Flame protection class in line with UL 94V-0

Fan series	Guard grilles	a	b
RG 175/190	LZ46-1	133	9,0
RG 220	LZ47-1	166	8,7
RG 225	LZ48-1	158	8,7

Subject to alternations

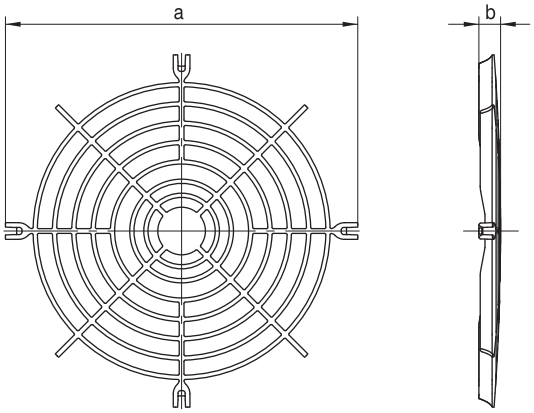

Fan filter guard grilles

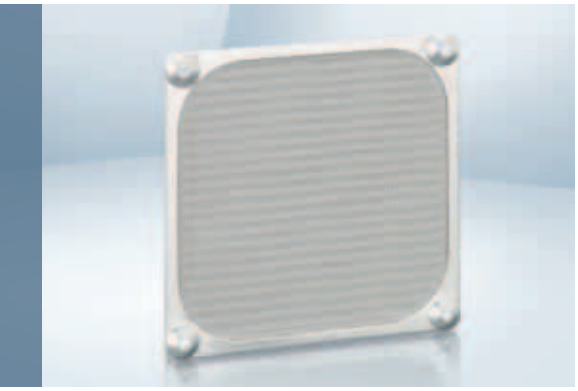

– **Material:** Filter guard LZ40 N: black, fibreglass-reinforced plastic with inserted wire mesh LZ60.
Filter LZ60: stainless steel wire mesh
Mounting lug LZ40-1 for mounting

Fan series DC	Fan series AC
4400 F	AC 4300
4400 FN	9900
4300	4000 N
4300 N	4000 Z
4400	Subject to alternations
4200	
4100 N	

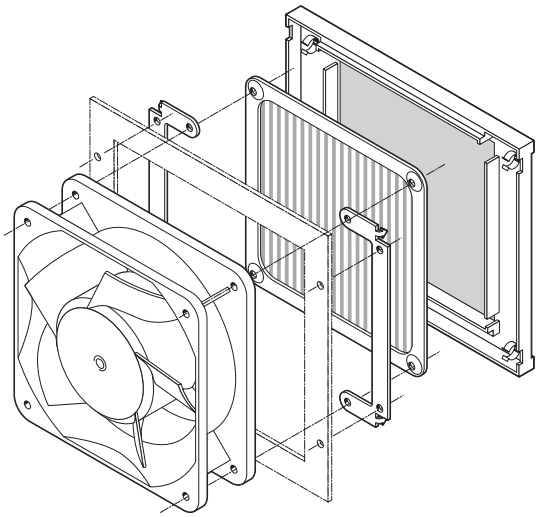

LZ40N — **Panel**

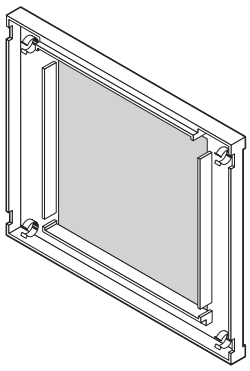

LZ40-1 — **Mounting lug**

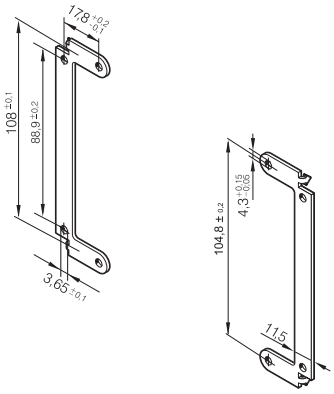

LZ60 — **Coarse filter**

ebmpapst

Fan filter guard grilles

- **Material:** Grille cover: polycarbonate (PC) with matt finish
  Mounting plate: wire mesh with black powder coating
  Filter pad: white, synthetically joined fibres
- **Note:**
  Filter safety grille suitable for fitting on axial fan ranges in the following dimensions: 60 mm, 80 mm, 92 mm, 119 mm, ø 172 mm. All filter units fit directly on the mounting holes on the fans.
  Filter safety grille consisting of 3 parts: outer grille cover, inner mounting plate and replaceable filter pad.
  The filter pad can be replaced quickly and easily via a quick release on the grille cover.
  The filter pads can be replaced even while the fan is running, as protection is provided by the welded wire mesh.

Protection filter	Fan size	A	B	C	D	Replacement filter*
FF60	60 x 60 mm	65	65	13,5	50,0	RF 60
FF80	80 x 80 mm	85	85	14,0	71,5	RF 80
FF92	92 x 92 mm	125	105	17,5	82,5	RF 92
FF119	119 x 119 mm	162	136	18,5	104,5	RF 119
FF172	ø 172 mm	226	190	19,5	162,0	RF 172

Subject to alternations

* Replacement filters only in packs of 5 pcs.

FF60 / FF80

Fan size: 60 x 60 mm
80 x 80 mm

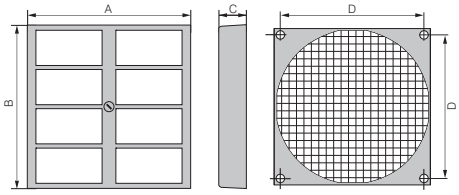

FF92 / FF 119

Fan size: 92 x 92 mm
119 x 119 mm

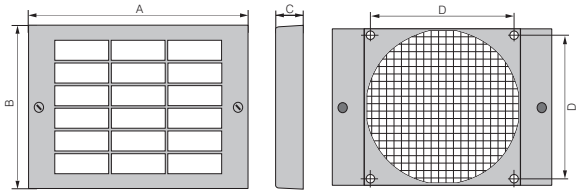

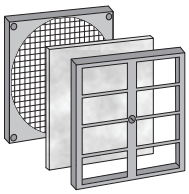

FF 172

Fan size: Ø 172 mm

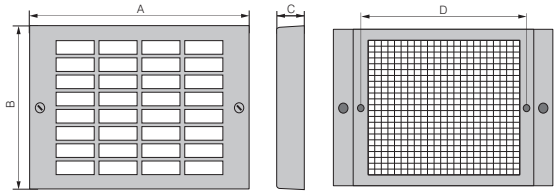

Filter performance

The filter safety grille filters filter 75% of dust particles with a size of 5-10 microns and can withstand temperatures of up to 100 °C. Filter class G3 in line with DIN EN 779.
Flame-retardant in line with DIN 53438, class F1. With a clean mounted filter, a reduction of air flow of 20-30% is possible.

Inlet nozzles

for centrifugal fans

– **Material:** Galvanised sheet steel

Fan		Vers.	k	m	o	q	r_1	s	t	u	No.:
RET 97	(S)	1	116,0	80,0	10,0	0,80	10,0	108,0	3x4,5	–	LZ 1000-097
RER 120	(P)	1	146,0	94,4	18,0	0,80	16,0	134,0	4x4,5	126,0	LZ 1000-120
RER 133	(P)	1	129,0	87,0	13,0	1,00	8,0	118,0	4x4,5	103,0	LZ 1000-133
RER 160	(S)	1	142,0	100,0	9,0	1,00	8,0	132,0	4x4,5	–	LZ 1000-160
RER 175 / 190	(P)	1	170,0	125,5	14,0	1,25	10,0	158,0	4x4,5	146,0	LZ 1000-175
RER 220	(P)	2	252,0	155,0	21,0	0,80	22,0	–	–	199,0	LZ 1000-220
RER 225	(P)	1	223,0	146,0	28,0	1,50	25,0	210,0	4x4,5	196,0	LZ 1000-225

(P) = plastic, (S) = sheet steel

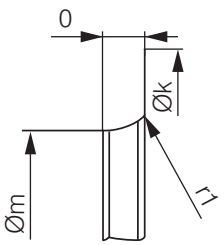

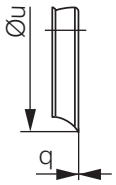

Vers. 1

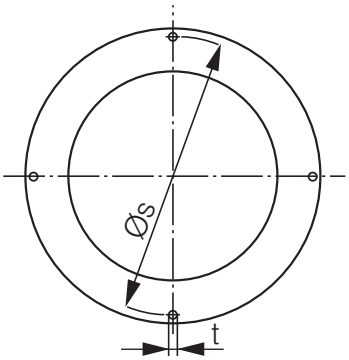

Vers. 2

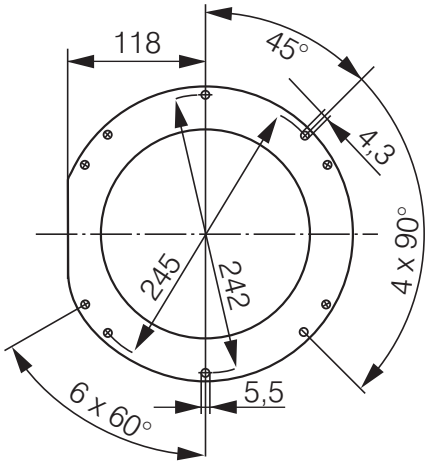

ebmpapst

Inlet nozzles

for centrifugal fans

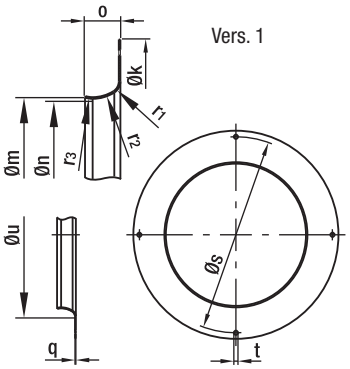

– **Material:** Galvanised sheet steel

Inlet nozzles for backward curved centrifugal fans

Part no.	Size[1]	Vers.	k	m	n	o	q	r_1	r_2	r_3	s	t	u
96120-2-4013	120 (P)	1	146,0	94,4	—	18,0	0,80	16,0	—	—	134,0	4x4,5	126,0

Subject to alternations (1) Size with key for impeller material: (P) = plastic, (S) = sheet steel, (A) = aluminium

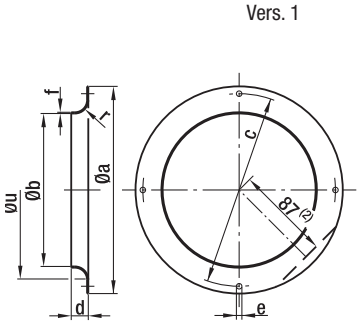

– **Material:** Galvanised sheet steel

Inlet nozzles for forward curved centrifugal fans

Part no.	Size	Vers.	a	b	c	d	e	f	r	u
09560-2-4013	085 (1)	1	92,0	63,4	84,0	6,0	3x4,2	0,80	6,8	—
09563-2-4013	097 (1)	1	116,0	80,0	108,0	10,0	3x4,5	0,80	10,0	—
09566-2-4013	108	1	129,0	87,0	118,0	13,0	4x4,5	1,00	8,0	—
09569-2-4013	120	1	142,0	100,0	132,0	9,0	4x4,5	1,00	8,0	—
09572-2-4013	133	1	150,0	112,0	142,0	12,0	4x4,5	1,00	10,0	—
09576-2-4013	140 / 146	1	170,0	125,5	158,0	14,0	4x4,5	1,25	10,0	—
09588-2-4013	160	1 (2)	185,0	130,0	175,0	17,0	4x4,5	0,75	12,0	—

Subject to alternations (1) 3 drilled holes staggered by 120° (2) only for 09588-2-4013

Inlet nozzles / Air filter

for centrifugal fans

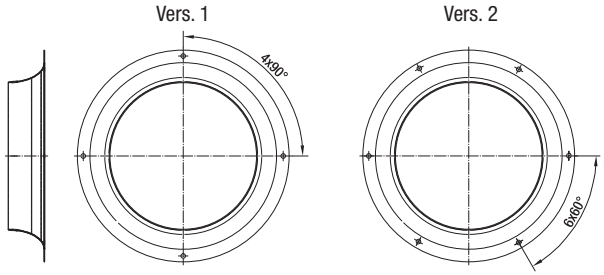

– **Material:** Galvanised sheet steel

Inlet nozzles without measuring device for backward curved centrifugal fans

Part no.	Size	Vers.	Dimensions
09576-2-4013	190	1	see corresponding product page
09609-2-4013	220	2	see corresponding product page
96358-2-4013	225	1	see corresponding product page
96359-2-4013	250	1	see corresponding product page
28000-2-4013	280	1	see corresponding product page
31000-2-4013	310	1	see corresponding product page

Subject to alternations

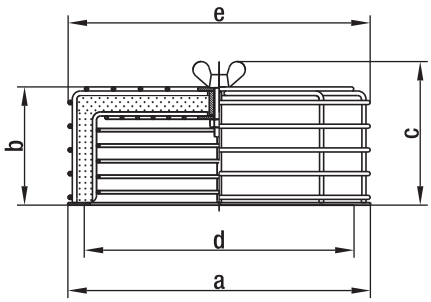

– **Material:** Steel wire / sheet steel plate, plastic coated in RAL no. 9005, black
– **Filter:** Viledon filter type R: PSB / 29 OS (according to DIN 24185)
Separation capacity: < 86 %
Efficiency: < 20 %
Dust binding capacity: 650 g/m2

Air filters for centrifugal blowers (with die-cast aluminium housing)

Part no.	Size	a	b	c	d	e	Spare filter
95777-1-5171	108 / 120	142,0	66,0	83,0	118-132	145,0	95779-1-5171
95778-1-5171	140 / 146 / 160	185,0	74,0	91,0	158-175	185,0	95780-1-5171

Subject to alternations

Connection cables

- Connection cable with moulded plug connection in varying lengths.
- Wire end with core crimp sleeve, core-end sleeve or tin-plated.
- Straight or angled plug.
- For all fan types with pin 2.8 / 3.0 x 0.5.

Plug model	L1 (mm)	Leads	Plug	Leads end	Lead colour	Receptacle for tabs	Application
LZ120	610	0,5 mm²	G	C	black/black	2,8 x 0,5	AC
LZ120-4	2 000	0,5 mm²	G	A	black/black	2,8 x 0,5	AC
LZ120-5	380	0,5 mm²	W	B	red/black	2,8 x 0,5	DC
LZ120-6	610	0,5 mm²	W	B	red/black	2,8 x 0,5	DC
LZ120-11	2 000	0,5 mm²	G	A	red/black	2,8 x 0,5	DC
LZ120-16	800	0,5 mm²	G	B	black/black	2,8 x 0,5	AC
LZ120-18	4 000	0,5 mm²	G	A	black/black	2,8 x 0,5	AC
LZ126	1 000	0,5 mm²	G	C	black/black	2,8 x 0,5	AC
LZ127	1 600	0,5 mm²	G	B	black/black	2,8 x 0,5	AC
LZ130-1	610	0,82 mm²	G	C	black/black	2,8 x 0,5	AC *
LZ140	610	0,73 mm²	G	B	black/black	2,8 x 0,8	AC

* UL-approved

Connection cable **Straight plug (G)**

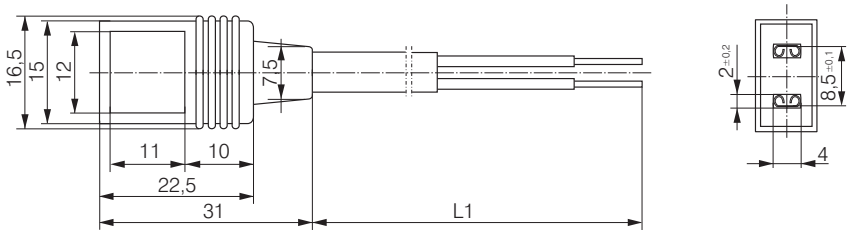

Connection cable **Angled plug (W)**

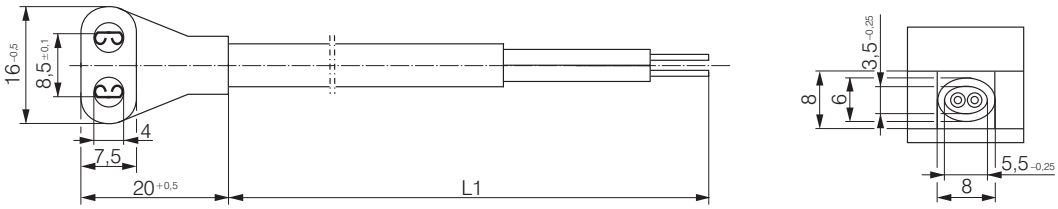

Cor crimp sleeve **Leads end A**

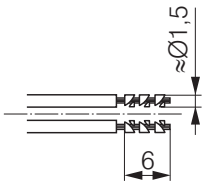

Tin-plated **Leads end B**

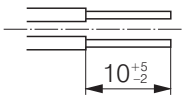

Core end sleeve **Leads end C**

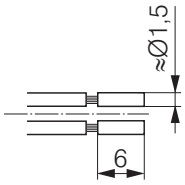

Connection leads (ESM) / Handheld Programmer

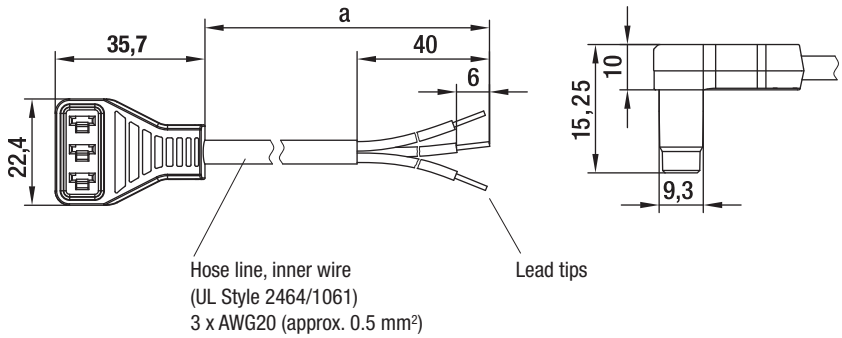

– **Design:** Cable conforms to UL standards, sealed plug.
Custom-built connection leads on request.

Connection leads for energy-saving motors 115/230 VAC

Part no.	a
13060-4-1040	450
13061-4-1040	1500

Subject to alternations

- **Easy speed programming**
- **Battery operated**
- **User-friendly navigation menu**
- **Protective boot with kickstand**

For Energy Saving Motor (ESM) based products

Part no.
CBC 000-AF08-01

Subject to alternations

Makes quick work of programming the two ESM selectable operating speeds. Eliminates the need for a personal computer, software, power adapter and 2nd cable. Good for production line or field service use. Automatic shut-off function for an extended battery life. Mini-USB connector for uploading software upgrades. Batteries, programming cable and operating manual included.

Accessories

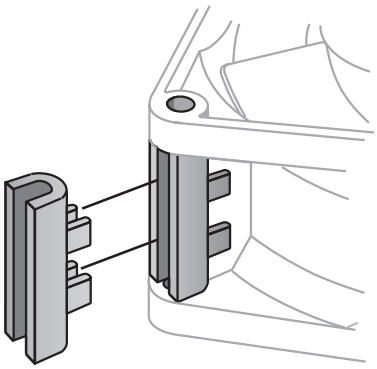

In addition to the accessories and assembly parts listed in this catalogue, ebm-papst also supplies numerous special parts for fans. The sales experts at ebm-papst will be happy to assist you in your enquiries concerning fan assembly and application.

Fan series	Accessories
8300	LZ212 / LZ260
8400 N	LZ261
3300	LZ212 / LZ260
3400 N	LZ261
9000	LZ210
4000	LZ210
4300	LZ212 / LZ260
8300	LZ212

Fan series	Accessories
5100	LZ210
5600	LZ210
5200	LZ210
5900	LZ210
7000	LZ210
VARIOFAN	LZ370

LZ212

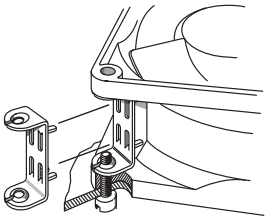

Screw clip of stainless steel.
For mounting fans with threaded pin 3.5 DIN EN ISO 1478 (7970).

LZ260 / LZ261

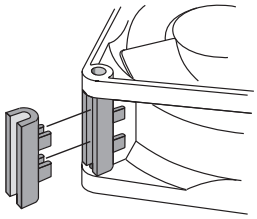

Spacer of fibreglass reinforced plastic. For screw mounting over both fan mounting flanges.

LZ210

Screw clip of hardened steel. For mounting fans with threaded pin 6-32 UNC and/or 3.5 DIN 7970.

LZ370

Required performance data:

R_{25}	= 100 KΩ ±5% @25°C
B-value	= 4190 ±2%
P_{max}	= 0,25 W

Temperature sensor for speed-controlled fan operation. Temperature range 30...50 °C.

LZ550

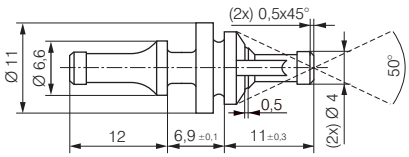

Rubber anti-vibration mounts
for fans with a hole ø of 4.3 ±0.2 mm and flange thickness of 3 - 5.5 mm.
For a carrier plate with a hole ø of 6.5 ±0.15 mm and plate thickness of 1 - 2 mm.

Electrical connections EC E)

Technical features (Nominal voltage 24 / 48 VDC)**:**

- Control input 0-10 VDC / PWM
- Tach output
- Reverse polarity and locked-rotor protection
- Motor current limitation
- Voltage-dependent derating
- Over-temperature protected electronics / motor
- Soft start

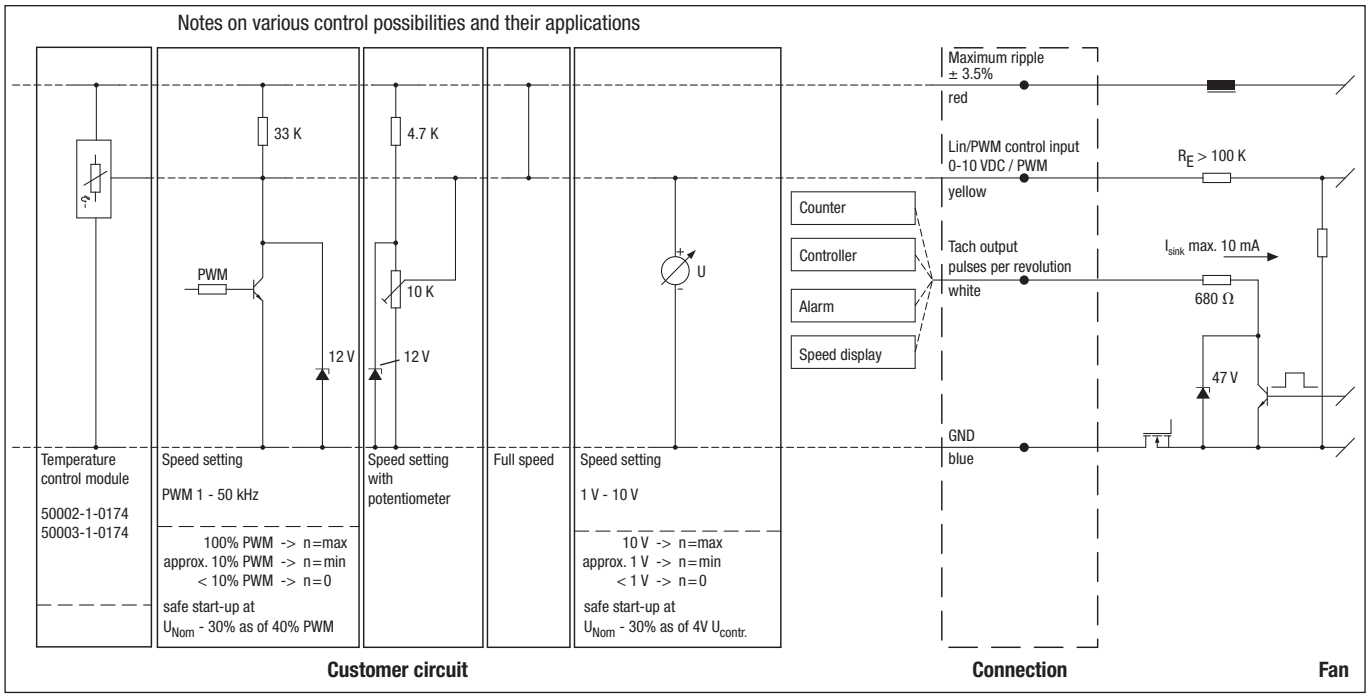

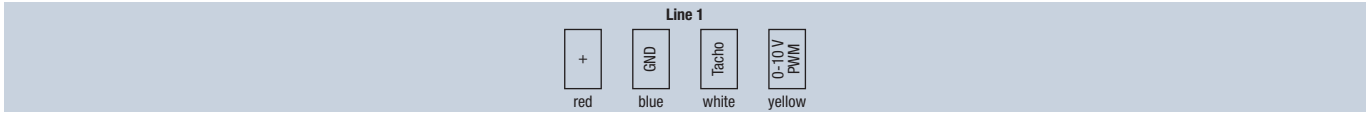

Line	Connection	Colour	Assignment / function
1	+	red	Maximum ripple ± 3.5 %
	GND	blue	GND

Line	Connection	Colour	Assignment / function
1	Tacho	white	Tach output
	0-10 V / PWM	yellow	Control input

Electrical connections EC G)

Technical features (Nominal voltage 24 / 48 VDC)**:**

- Control input 0-10 VDC / PWM
- Tach output
- Reverse polarity and locked-rotor protection

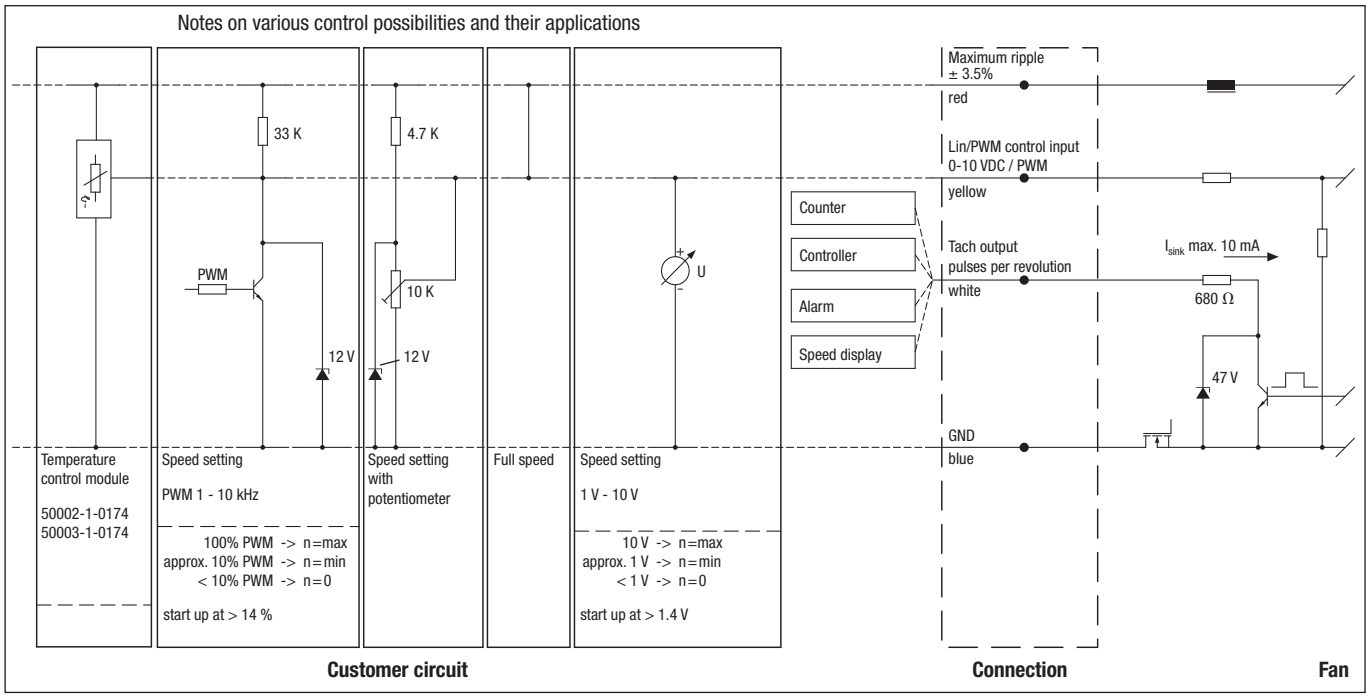

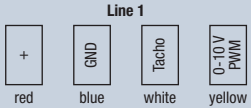

Line	Connection	Colour	Assignment / function
1	+	red	Maximum ripple ± 3.5 %
	GND	blue	GND

Line	Connection	Colour	Assignment / function
1	Tacho	white	Tach output:
			2 pulses / revolution (M1G045/M1G055)
			3 pulses / revolution (M1G074/M1G084)
	0-10 V / PWM	yellow	Control input (Impedance 100 kΩ)

Electrical connections EC H3)

Technical features (M3G 045 / M3G 055 with 2 Speed stages)**:**

- Speed adjustment input (230V)
- Over-temperature protected electronics / motor
- Motor current limitation
- Locked-rotor protection
- Soft start

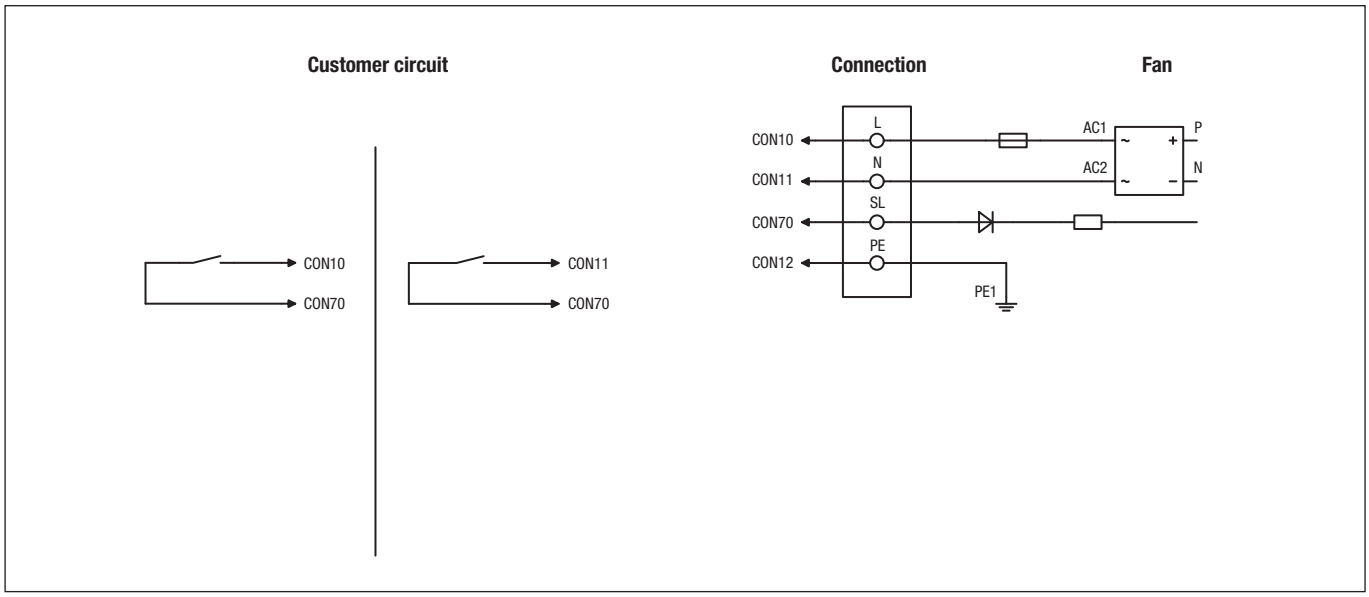

Line	Connection	Colour	Assignment / function
CON10	L	black	Power supply 230 VAC, 50 - 60 Hz, see type plate for voltage range
CON11	N	blue	Neutral conductor
CON12	PE	green/yellow	Protective earth
CON70	SL	brown	Speed selection: switch open = speed 1; switch closed = speed 2

Electrical connections EC H4)

Technical features (M3G 055 Speed-controlled)**:**

- Output 10 VDC max. 1,1 mA
- Tach output
- Over-temperature protected electronics / motor
- Motor current limitation
- Soft start
- Locked-rotor protection
- Control input 0-10 VDC / PWM
- Control interface with SELV potential safely disconnected from the mains

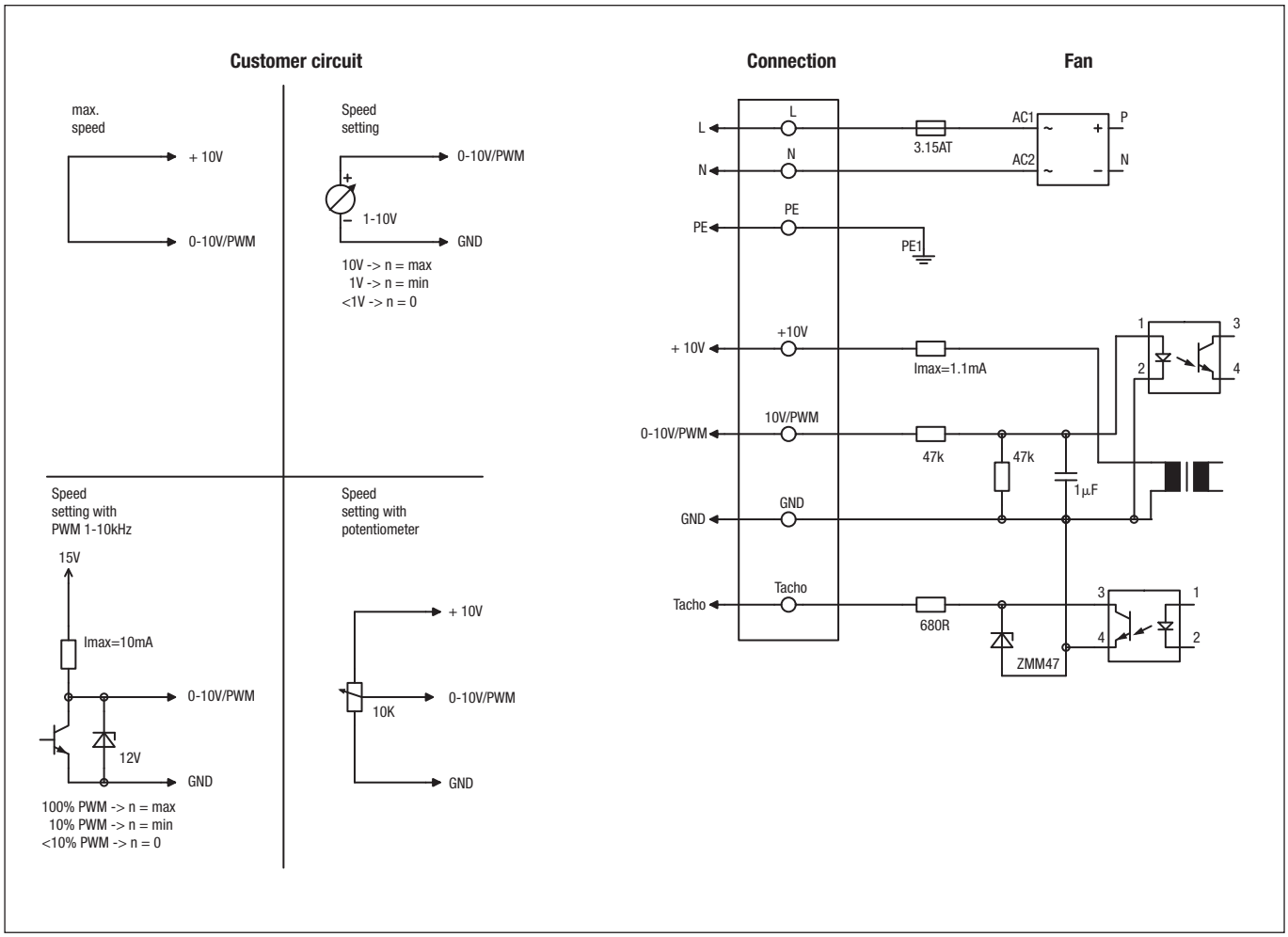

Connection	Colour	Assignment / function
L	black	Power supply 230 VAC, 50 - 60 Hz, see type plate for voltage range
N	blue	Neutral conductor
PE	green/yellow	Protective earth
+10V/max.1.1mA	red	Voltage output +10 V / 1.1 mA, electrically isolated, not short-circuit-proof
Tacho	white	Tach output: Open Collector, 1 pulse per revolution, electrically isolated
0-10V PWM	yellow	Control input 0 - 10 V or PWM, electrically isolated
GND	blue	GND - Connection for control interface

Electrical connections EC J5)

Technical features (Nominal voltage 24 / 48 VDC)**:**

- Control input 0-10 VDC / PWM
- Tach output
- Reverse polarity and locked-rotor protection
- Motor current limitation
- Line undervoltage detection
- Soft start

Notes on various control possibilities and their applications

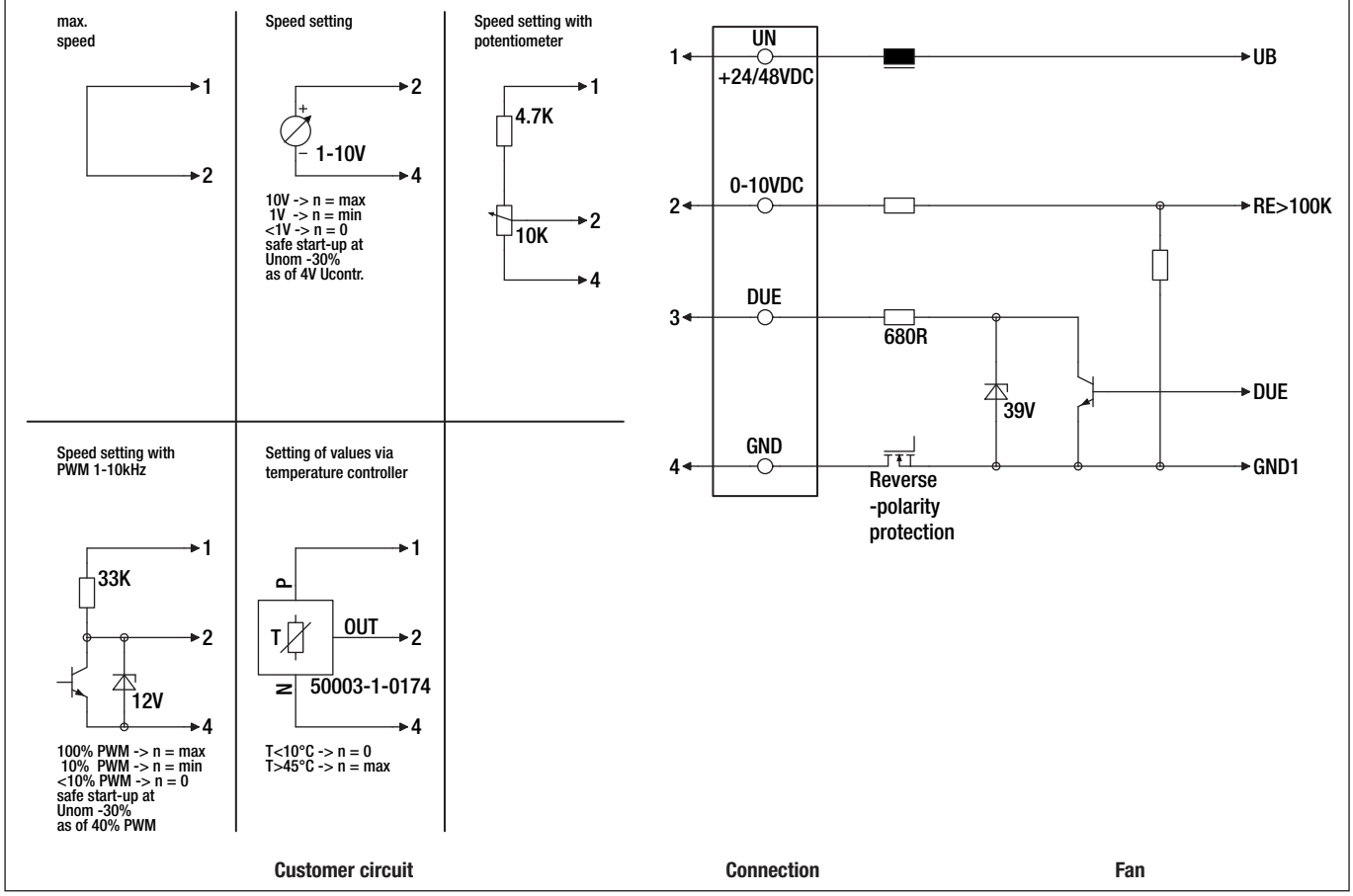

Line	Connection	Colour	Assignment / function
1	UN +24/48 VDC	red	Power supply 24/48 VDC, Maximum ripple ± 3,5 %
2	0-10 VDC	yellow	Control input Re >100 K
3	Tach	white	Speed monitoring output, 3 pulses / revolution, Isink max. = 10 mA
4	GND	blue	Reference ground

Electrical connections AC A1) / C2 / J7)

A1) Single-phase capacitor motor (1~ 115/230 VAC power line)
with TOP wired internally

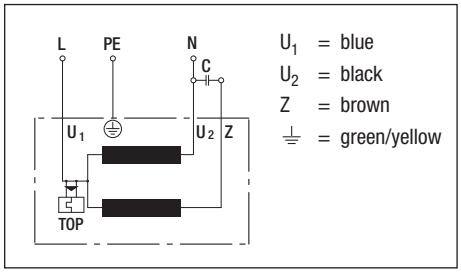

C2) Star connection (3~ 400 VAC power line)
without TOP

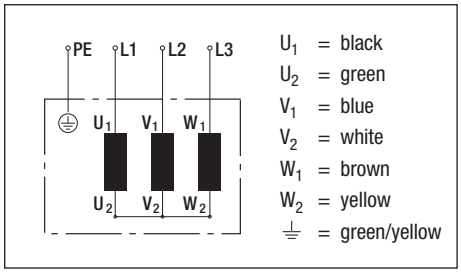

J7) Energy-saving motor (ESM) (1~ 115/230 VAC power line)

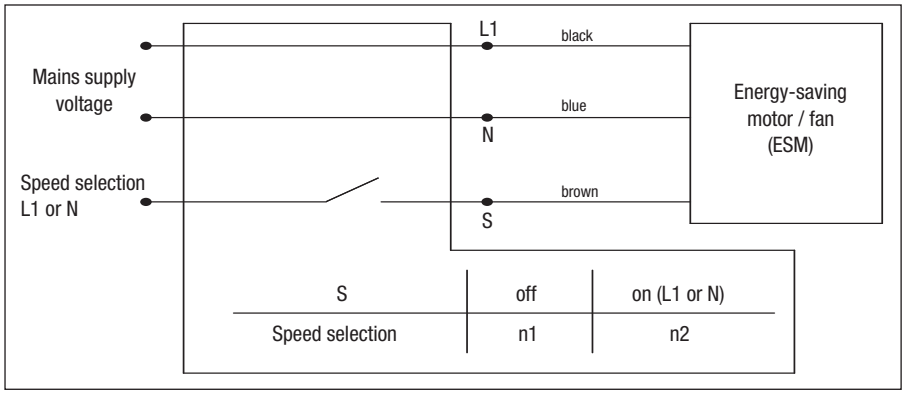

ebm-papst in Germany

ebm-papst Mulfingen GmbH & Co. KG
Bachmühle 2
74673 Mulfingen
GERMANY
Phone +49 7938 81-0
Fax +49 7938 81-110
info1@de.ebmpapst.com

ebm-papst St. Georgen GmbH & Co. KG
Hermann-Papst-Straße 1
78112 St. Georgen
GERMANY
Phone +49 7724 81-0
Fax +49 7724 81-1309
info2@de.ebmpapst.com

ebm-papst Landshut GmbH
Hofmark-Aich-Straße 25
84030 Landshut
GERMANY
Phone +49 871 707-0
Fax +49 871 707-465
info3@de.ebmpapst.com

Berlin
Dipl.-Ing. (TH) Jens Duchow
Händelstraße 7
16341 Panketal
GERMANY
Phone +49 30 944149-62
Fax +49 30 944149-63
Jens.Duchow@de.ebmpapst.com

Bielefeld
Dipl.-Ing. (FH) Wolf-Jürgen Weber
Niehausweg 13
33739 Bielefeld
GERMANY
Phone +49 5206 91732-31
Fax +49 5206 91732-35
Wolf-Juergen.Weber@de.ebmpapst.com

Dortmund
Dipl.-Ing. (FH) Hans-Joachim Pundt
Auf den Steinern 3
59519 Möhnesee-Völlinghausen
GERMANY
Phone +49 2925 800-407
Fax +49 2925 800-408
Hans-Joachim.Pundt@de.ebmpapst.com

Frankfurt
Dipl.-Ing. Christian Kleffmann
Dr.-Hermann-Krause-Straße 23
63452 Hanau
GERMANY
Phone +49 6181 1898-12
Fax +49 6181 1898-13
Christian.Kleffmann@de.ebmpapst.com

Halle
Dipl.-Ing. (TU) Michael Hanning
Lercheneck 4
06198 Salzatal / OT Lieskau
GERMANY
Phone +49 345 55124-56
Fax +49 345 55124-57
Michael.Hanning@de.ebmpapst.com

Hamburg
Breuell & Hilgenfeldt GmbH
Ing. Dirk Kahl
Elektroingenieur
Grützmühlenweg 48
22339 Hamburg
GERMANY
Phone +49 40 538092-19
Fax +49 40 538092-84
Dirk.Kahl@de.ebmpapst.com

Heilbronn / Heidelberg
Dipl.-Ing. Mark Gartner
Gehrweg 12
74199 Unterheinriet
GERMANY
Phone +49 7130 404569-1
Fax +49 7130 404569-2
Mark.Gartner@de.ebmpapst.com

Kassel
Dipl.-Ing. (FH) Ralph Brück
Hoherainstraße 38
35075 Gladenbach
GERMANY
Phone +49 6462 4071-10
Fax +49 6462 4071-11
Ralph.Brueck@de.ebmpapst.com

Koblenz
Winfried Schaefer
Hinter der Kirch 10
56767 Uersfeld
GERMANY
Phone +49 2657 16-96
Fax +49 2657 16-76
Winfried.Schaefer@de.ebmpapst.com

Munich
Dipl.-Wirt.-Ing. (FH) Jens Peter
Uhlandstraße 6
74427 Fichtenberg
GERMANY
Phone +49 7971 260-180
Fax +49 7971 260-221
Jens.Peter@de.ebmpapst.com

Nuremberg
Dipl.-Wirt.-Ing. (FH) Axel Resch
Dr.-August-Koch-Str. 1
91639 Wolframs-Eschenbach
GERMANY
Phone +49 9875 9783-170
Fax +49 9875 9783-171
Axel.Resch@de.ebmpapst.com

Offenburg
Dipl.-Ing. (FH) Ralf Braun
Hubeneck 21
77704 Oberkirch
GERMANY
Phone +49 7802 9822-52
Fax +49 7802 9822-53
Ralf.Braun@de.ebmpapst.com

Stuttgart
Dipl.-Ing. (FH) Rudi Weinmann
Hindenburgstraße 100/1
73207 Plochingen
GERMANY
Phone +49 7153 9289-80
Fax +49 7153 9289-81
Rudi.Weinmann@de.ebmpapst.com

Ulm
M.Sc. Reinhard Sommerreißer
Am Silbermannpark 10
86161 Augsburg
GERMANY
Phone +49 821 6610-7023
Fax +49 821 6610-7024
Reinhard.Sommerreisser@de.ebmpapst.com

Distributors

Burgdorf
ETB Electronic Team
Beratungs- u. Vertriebs GmbH
Wundramweg 1
31303 Burgdorf
GERMANY
Phone +49 5136 97229-30
Fax +49 5136 97229-39
info@etb-electronic.de
www.etb-electronic.de

Frankfurt
R.E.D. Handelsgesellschaft mbH
Gutenbergstraße 3
63110 Rodgau - Jügesheim
GERMANY
Phone +49 6106 841-0
Fax +49 6106 841-111
info@red-elektromechanik.de
www.red-elektromechanik.de

Frankfurt / Neu-Isenburg
Arrow Central Europe GmbH
Frankfurter Straße 211
63263 Neu-Isenburg
GERMANY
Telefon: +49(0)6102/5030-0
Telefax: +49(0)6102/5030-8455
E-Mail: info@arrowce.com

Hamburg
Breuell + Hilgenfeldt GmbH
Grützmühlenweg 48
22339 Hamburg
GERMANY
Phone +49 40 538092-20
Fax +49 40 538092-84
info@breuell-hilgenfeldt.de

Walter Kluxen GmbH
Neuer Höltigbaum 6
20097 Hamburg
GERMANY
Phone +49 40 237010
Fax +49 40 23701309

ebm-papst in Europe

Klausdorf
ETB Electronic Team
Beratungs- u. Vertriebs GmbH
Zossener Straße 27
15838 Klausdorf
GERMANY
Phone +49 33703 69-0
Fax +49 33703 69-149
info@etb-electronic.de
www.etb-electronic.de

Munich
A. Schweiger GmbH
Ohmstraße 1
82054 Sauerlach
GERMANY
Phone +49 8104 897-0
Fax +49 8104 897-90
info@schweiger-gmbh.de
www.schweiger-gmbh.com

Multi-Bauelemente-Service
Vertrieb von elektr. Bauelementen GmbH
Römerstraße 8
85661 Forstinning
GERMANY
Phone +49 8121 2506-0
Fax +49 8121 2506-200
multi.bauelemente@mbs.to

● *Express* **Service-Center** (1 to 5 pieces)

North
Breuell + Hilgenfeldt GmbH
Grützmühlenweg 48
22339 Hamburg
GERMANY
Phone +49 40 538092-20
Fax +49 40 538092-84
ebmpapst@breuell-hilgenfeldt.de

South
Scheffel
elektrotechnischer Vertrieb GmbH
Aischbach 1
70839 Gerlingen
GERMANY
Phone +49 7156 28357
Fax +49 7156 49425
info@ebmpapst-service.de

Europe

Austria
ebm-papst Motoren & Ventilatoren GmbH
Straubingstraße 17
4030 Linz
AUSTRIA
Phone +43 732 321150-0
Fax +43 732 321150-20
info@at.ebmpapst.com
www.ebmpapst.at

Avnet Abacus Vienna
Schönbrunner Str. 297-307
1120 Vienna
AUSTRIA
Phone +43 1 86642-0
Fax +43 1 86642-250
wien@avnet-abacus.eu
www.avnet-abacus.eu

Compex Ges.m.b.H
Wurlitzergasse 10/3
1160 Wien
AUSTRIA
Phone +43 1 4804223
Fax +43 1 4864230
compex.wien@utanet.at

Belarus
ebm-papst Bel AgmbH
Lipkovskaya Gasse 34
Office No. 6, Room 106, 107
223010 Minsk
BELARUS
Phone +375 17 3851556
Fax +375 17 3851556
info@by.ebmpapst.com
www.ebmpapst.by

Belgium
ebm-papst Benelux B.V.
Sales office Belgium-Luxemburg
Romeinsestraat 6/0101
Research Park Haasrode
3001 Heverlee-Leuven
BELGIUM
Phone +32 16 396-200
Fax +32 16 396-220
info@be.ebmpapst.com
www.ebmpapst.be

Avnet Abacus Diegem
Eagle Building
Kouterveldstraat 20
1831 Diegem
BELGIUM
Phone +32 2 7099 167
Fax +32 2 7099 801
diegem@avnet-abacus.eu
www.avnet-abacus.eu

Bulgaria
ebm-papst Romania S.R.L.
Str. Tarnavei No. 20
500327 Brasov
ROMANIA
Phone +40 268 331859
Fax +40 268 312805
dudasludovic@xnet.ro

Compex Ges.m.b.H
Wurlitzergasse 10/3
1160 Wien
AUSTRIA
Phone +43 1 4804223
Fax +43 1 4864230
compex.wien@utanet.at

Croatia
ebm-papst Industries Kft.
Ezred u. 2.
1044 Budapest
HUNGARY
Phone +36 1 8722-190
Fax +36 1 8722-194
office@hu.ebmpapst.com

Compex Ges.m.b.H
Wurlitzergasse 10/3
1160 Wien
AUSTRIA
Phone +43 1 4804223
Fax +43 1 4864230
compex.wien@utanet.at

Czech Republic / Slovakia
ebm-papst CZ s.r.o.
Kaštanová 34a
620 00 Brno
CZECH REPUBLIC
Phone +420 544 502-411
Fax +420 547 232-622
info@ebmpapst.cz
www.ebmpapst.cz

Denmark
ebm-papst Denmark ApS
Vallensbækvej 21
2605 Brøndby
DENMARK
Phone +45 43 631111
Fax +45 43 630505
mail@dk.ebmpapst.com
www.ebmpapst.dk

Estonia
ebm-papst Oy, Eesti Filiaal
Kesk tee 13
Aaviku küla, Jüri Tehnopark
75301 Rae Vald, Harjumaa
ESTONIA
Phone +372 65569-78
Fax +372 65569-79
www.ebmpapst.ee

ebm-papst in Europe

Finland
ebm-papst Oy
Puistotie 1
02760 Espoo
FINLAND
Phone +358 9 887022-0
Fax +358 9 887022-13
mailbox@ebmpapst.fi
www.ebmpapst.fi

France
ebm-papst sarl
ZI Nord - rue A. Mohler
BP 62
67212 Obernai Cedex
FRANCE
Phone +33 820 326266
Fax +33 3 88673883
info@ebmpapst.fr
www.ebmpapst.fr

Greece
Helcoma
Th. Rotas & Co OE
Davaki 65
17672 Kallithea-Attiki
GREECE
Phone +30 210 9513-705
Fax +30 210 9513-490
contact@helcoma.gr
www.helcoma.gr

Assimacopoulos S.A.
11, Karitsi Square
10561 Athen
GREECE
Phone +30 10 322 1737
Fax +30 10 322 5708
assimac@interagora.gr
www.assimacopoulos.gr

Hungary
ebm-papst Industries Kft.
Ezred u. 2.
1044 Budapest
HUNGARY
Phone +36 1 8722-190
Fax +36 1 8722-194
office@hu.ebmpapst.com

Iceland
RJ Engineers
Stangarhyl 1a
110 Reykjavik
ICELAND
Phone +354 567 8030
Fax +354 567 8015
rj@rj.is
www.rj.is

Ireland
ebm-papst UK Ltd.
Chelmsford Business Park
Chelmsford Essex CM2 5EZ
UNITED KINGDOM
Phone +44 1245 468555
Fax +44 1245 466336
sales@uk.ebmpapst.com
www.ebmpapst.co.uk

Italy
ebm-papst Srl
Via Cornaggia 108
22076 Mozzate (Co)
ITALY
Phone +39 0331 836201
Fax +39 0331 821510
info@it.ebmpapst.com
www.ebmpapst.it

Macedonia
ebm-papst Industries Kft.
Ezred u. 2.
1044 Budapest
HUNGARY
Phone +36 1 8722-190
Fax +36 1 8722-194
office@hu.ebmpapst.com

Netherlands
ebm-papst Benelux B.V.
Engelseweg 127
5705 AC Helmond
NETHERLANDS
Phone +31 492 502-900
Fax +31 492 502-950
verkoop@nl.ebmpapst.com
www.ebmpapst.nl

Avnet Abacus Netherlands
Takkebijsters 2
4817 BL Breda
NETHERLANDS
Phone +31 765 722 300
Fax +31 765 722 303
breda@avnet-abacus.eu
www.avnet-abacus.eu

Norway
ebm-papst AS
Nordåsveien 5
1251 Oslo
NORWAY
Phone +47 22 763340
Fax +47 22 619173
mailbox@ebmpapst.no
www.ebmpapst.no

Poland
ebm-papst Polska Sp. z o.o.
ul. Annopol 4A
03236 Warszawa
POLAND
Phone +48 22 6757819
Fax +48 22 6769587
office@ebmpapst.pl
www.ebmpapst.pl

Compex Ges.m.b.H
Wurlitzergasse 10/3
1160 Wien
AUSTRIA
Phone +43 1 4804223
Fax +43 1 4864230
compex.wien@utanet.at

Portugal
ebm-papst (Portugal), Lda.
Centro Empresarial de Alverca
Rua de Adarse, Vale D'Ervas
Corpo D / Fracção 3
2615-178 Alverca do Ribatejo
PORTUGAL
Phone +351 218 394 880
Fax +351 218 394 759
info@pt.ebmpapst.com
www.ebmpapst.pt

Romania
ebm-papst Romania S.R.L.
Str. Tarnavei Nr. 20
500327 Brasov
ROMANIA
Phone +40 268 331859
Fax +40 268 312805
dudasludovic@xnet.ro

Compex Ges.m.b.H
Wurlitzergasse 10/3
1160 Wien
AUSTRIA
Phone +43 1 4804223
Fax +43 1 4864230
compex.wien@utanet.at

Russia
ebm-papst Ural GmbH
Posadskaja-Strasse, 23(E), 3
620102 Ekaterinburg
RUSSIA
Phone +7 343 2338000
Fax +7 343 2337788
Konstantin.Molokov@ru.ebmpapst.com
www.ebmpapst.ur.ru

ebm-papst Rus GmbH
proezd 4529, vladenie 5, stroenie 1
141000 Mytistschi, Oblast Moskau
RUSSIA
Phone +7 495 9807524
Fax +7 495 5140924
info@ebmpapst.ru
www.ebmpapst.ru

ebm-papst in Europe and America

Serba & Montenegro
ebm-papst Industries Kft.
Ezred u. 2.
1044 Budapest
HUNGARY
Phone +36 1 8722-190
Fax +36 1 8722-194
office@hu.ebmpapst.com

Spain
ebm-papst Ibérica S.L.
Avda. del Sistema Solar, 29
28830 San Fernando de Henares (Madrid)
SPAIN
Phone +34 91 6780894
Fax +34 91 6781530
ventas@ebmpapst.es
www.ebmpapst.es

Sweden
ebm-papst AB
Äggelundavägen 2
17562 Järfälla
SWEDEN
Phone +46 10 4544400
Fax +46 8 362306
info@ebmpapst.se
www.ebmpapst.se

Switzerland
ebm-papst AG
Rütisbergstrasse 1
8156 Oberhasli
SWITZERLAND
Phone +41 44 73220-70
Fax +41 44 73220-77
verkauf@ebmpapst.ch
www.ebmpapst.ch

Omni Ray AG
Im Schörli 5
8600 Dübendorf
SWITZERLAND
Phone +41 44 802 2880
Fax +41 44 802 2828
r.borner@omniray.ch
www.omniray.ch

Turkey
Akantel Elektronik San. Tic. LTD. Sti.
Atatürk Organize Sanayi
Bölgesi 10007 SK. No.:6
35620 Cigli-Izmir
TURKEY
Phone +90 232 3282090
Fax +90 232 3280270
akantel@akantel.com.tr
www.ebmpapst.com.tr

Ukraine
ebm-papst Ukraine LLC
Lepse Boulevard, 4, Building 21
03067 Kiev
UKRAINE
Phone +38 044 2063091
Fax +38 044 2063091
mail@ebmpapst.ua
www.ebmpapst.ua

United Kingdom
ebm-papst UK Ltd.
Chelmsford Business Park
Chelmsford Essex CM2 5EZ
UNITED KINGDOM
Phone +44 1245 468555
Fax +44 1245 466336
sales@uk.ebmpapst.com
www.ebmpapst.co.uk

ebm-papst Automotive & Drives (UK) Ltd.
The Smithy
Fidlers Lane
East Ilsley, Berkshire RG20 7LG
UNITED KINGDOM
Phone +44 1635 2811-11
Fax +44 1635 2811-61
A&Dsales@uk.ebmpapst.com
www.ebmpapst-ad.com

America

Argentina
ebm-papst de Argentina S.A.
Hernandarias 148 Lomas del Mirador
Pcia. de Buenos Aires (1752)
ARGENTINA
Phone +54 11 46576135
Fax +54 11 46572092
ventas@ar.ebmpapst.com
www.ebmpapst.com.ar

Brasil
ebm-papst Motores Ventiladores Ltda.
Av. José Giorgi, 301 Galpões B6+B7
Condominio Logical Center
06707-100 Cotia - São Paulo
BRAZIL
Phone +55 11 4613-8700
Fax +55 11 4777-1456
vendas@br.ebmpapst.com
www.ebmpapst.com.br

Canada
ebm-papst Canada Inc.
1800 Ironstone Manor, Unit 2
Pickering, Ontario, L1W3J9
CANADA
Phone +1 905 420-3533
Fax +1 905 420-3772
sales@ca.ebmpapst.com
www.ebmpapst.ca

Mexico
ebm Industrial S. de R.L. de C.V.
Paseo de Tamarindos 400-A-5to Piso
Col. Bosques de las Lomas
Mexico 05120, D.F.
MEXICO
Phone +52 55 3300-5144
Fax +52 55 3300-5243
sales@mx.ebmpapst.com
www.ebmpapst.com.mx

USA
ebm-papst Inc.
P.O. Box 4009
100 Hyde Road
Farmington, CT 06034
UNITED STATES
Phone +1 860 674-1515
Fax +1 860 674-8536
sales@us.ebmpapst.com
www.ebmpapst.us

ebm-papst Automotive & Drives, Inc.
3200 Greenfield, Suite 255
Dearborn, MI 48120
UNITED STATES
Phone +1 313 406-8080
Fax +1 313 406-8081
automotive@us.ebmpapst.com
www.ebmpapst-automotive.us

ebm-papst in Africa, Asia and Australia

Africa

South Africa
ebm-papst South Africa (Pty) Ltd.
P.O. Box 3124
1119 Yacht Avenue
2040 Honeydew
SOUTH AFRICA
Phone +27 11 794-3434
Fax +27 11 794-5020
info@za.ebmpapst.com
www.ebmpapst.co.za

Asia

China
ebm-papst Ventilator (Shanghai) Co., Ltd.
No. 418, Hua Jing Road
Wai Gao Qiao Free Trade Zone
No. 2001, Yang Gao (N) Road
200131 Shanghai
P.R. of CHINA
Phone +86 21 5046-0183
Fax +86 21 5046-1119
sales@cn.ebmpapst.com
www.ebmpapst.com.cn

Hong Kong
ebm-papst Hong Kong Ltd.
Room 17E, MG Tower
133 Hoi Bun Road, Kwun Tong
Hong Kong
P.R. of CHINA
Phone +852 2145-8678
Fax +852 2145-7678
info@hk.ebmpapst.com

India
ebm-papst India Pvt. Ltd.
26/3, G.N.T. Road, Erukkencherry
Chennai-600118
INDIA
Phone +91 44 25372556
Fax +91 44 25371149
sales@in.ebmpapst.com
www.ebmpapst.in

Indonesia
ebm-papst Indonesia
Representative Office
German Centre, 4th Floor, Suite 4470
Jl. Kapt. Subijono Dj. Bumi Serpong Damai
15321 Tangerang
INDONESIA
Phone +62 21 5376250
Fax +62 21 5388305
salesdept@id.ebmpapst.com

Israel
Polak Bros. Import Agencies Ltd.
9 Hamefalsim Street
Kiryat Arie, Petach-Tikva 49514
ISRAEL
Phone +972 3 9100300
Fax +972 3 5796679
polak@polak.co.il
www.polak.co.il

Japan
ebm-papst Industries Japan K.K.
12th Floor, Benex S-3 Bldg.
3-20-8 Shinyokohama, Kohoku-ku
222-0033 Yokohama
JAPAN
Phone +81 45 47057-51
Fax +81 45 47057-52
info@jp.ebmpapst.com
www.ebmpapst.jp

Korea
ebm-papst Korea Co. Ltd.
6F, Trutec Bldg.
B 6-2, Digital Media City (DMC)
Sangam-Dong, Mapu-Gu
Seoul 121-270
KOREA
Phone +82 2 366213-24
Fax +82 2 366213-26
info@kr.ebmpapst.com
www.ebmpapst.co.kr

Malaysia
ebm-papst Malaysia
Representative Office
Unit 12-2, Jalan USJ Sentral 3
Persiaran Subang, Selangor Darul Ehsan
47600 Subang Jaya
MALAYSIA
Phone +60 3 8024-1680
Fax +60 3 8024-8718
salesdept@my.ebmpapst.com

Singapore
ebm-papst SEA Pte. Ltd.
No. 23 Ubi Road 4
#06-00 Olympia Industrial Building
Singapore 408620
SINGAPORE
Phone +65 65513789
Fax +65 68428439
salesdept@sg.ebmpapst.com

Taiwan
ETECO Engineering & Trading Corp.
6F-4, No. 93, Ta-sun 1 St. Road
Tsow-Inn District, Kaohsiung
TAIWAN
Phone +886 7 557-4268
Fax +886 7 557-2788
eteco@ms22.hinet.net
www.ebmpapst.com.tw

Thailand
ebm-papst Thailand Co., Ltd.
99/9 Moo 2, Central Chaengwattana Tower
14th Floor, Room 1402
Chaengwattana Road Bangtarad, Pakkret
11120 Nonthaburi
THAILAND
Phone +66 2 8353785-7
Fax +66 2 8353788
salesdept@th.ebmpapst.com

United Arab Emirates
ebm-papst Middle East FZE
PO Box 17755
Jebel Ali Free Zone / FZS1 / AP05
Dubai
UNITED ARAB EMIRATES
Phone +971 4 88608-26
Fax +971 4 88608-27
info@ae.ebmpapst.com
www.ebmpapst.ae

Vietnam
ebm-papst Vietnam
Representative Office
Room #102, 25 Nguyen Van Thu Street
District 1
Ho Chi Minh City 70000
VIETNAM
Phone +84 8 39104099
Fax +84 8 39103970
linh.nguyen@vn.ebmpapst.com

Australia

Australia
ebm-papst A&NZ Pty Ltd.
10 Oxford Road
Laverton North, Victoria, 3026
AUSTRALIA
Phone +61 3 9360-6400
Fax +61 3 9360-6464
sales@ebmpapst.com.au
www.ebmpapst.com.au

New Zealand
ebm-papst A&NZ Pty Ltd.
Unit H, 61 Hugo Johnston Drive
1061 Penrose, Auckland
NEW ZEALAND
PO Box 112278,
1642 Penrose, Auckland
Phone +64 9 525-0245
Fax +64 9 525-0246
sales@ebmpapst.com.au
www.ebmpapst.com.au

Notes

Notes

www.ebmpapst.com

37634-7-8811 · 2014-03 · RA-4'
Printed in Germany

MIX
Paper from responsible sources
FSC® C010264
FSC
www.fsc.org

ebm-papst
St. Georgen GmbH & Co. KG

Hermann-Papst-Straße 1
D-78112 St. Georgen
Germany
Phone +49 7724 81-0
Fax +49 7724 81-1309
info2@de.ebmpapst.com

ebm-papst
Mulfingen GmbH & Co. KG

Bachmühle 2
D-74673 Mulfingen
Germany
Phone +49 7938 81-0
Fax +49 7938 81-110
info1@de.ebmpapst.com

ebm-papst
Landshut GmbH

Hofmark-Aich-Straße 25
D-84030 Landshut
Germany
Phone +49 871 707-0
Fax +49 871 707-465
info3@de.ebmpapst.com

ebmpapst

The engineer's choice

Общество с ограниченной ответственностью «МосЧип» ИНН 7719860671 / КПП 771901001
Адрес: 105318, г.Москва, ул.Щербаковская д.3, офис 1107

Данный компонент на территории Российской Федерации

Вы можете приобрести в компании MosChip.

Для оперативного оформления запроса Вам необходимо перейти по данной ссылке:

http://moschip.ru/get-element

Вы можете разместить у нас заказ для любого Вашего проекта, будь то серийное производство или разработка единичного прибора.

В нашем ассортименте представлены ведущие мировые производители активных и пассивных электронных компонентов.

Нашей специализацией является поставка электронной компонентной базы двойного назначения, продукции таких производителей как XILINX, Intel (ex.ALTERA), Vicor, Microchip, Texas Instruments, Analog Devices, Mini-Circuits, Amphenol, Glenair.

Сотрудничество с глобальными дистрибьюторами электронных компонентов, предоставляет возможность заказывать и получать с международных складов практически любой перечень компонентов в оптимальные для Вас сроки.

На всех этапах разработки и производства наши партнеры могут получить квалифицированную поддержку опытных инженеров.

Система менеджмента качества компании отвечает требованиям в соответствии с ГОСТ Р ИСО 9001, ГОСТ РВ 0015-002 и ЭС РД 009

Офис по работе с юридическими лицами:

105318, г.Москва, ул.Щербаковская д.3, офис 1107, 1118, ДЦ «Щербаковский»

Телефон: +7 495 668-12-70 (многоканальный)

Факс: +7 495 668-12-70 (доб.304)

E-mail: info@moschip.ru

Skype отдела продаж:
moschip.ru
moschip.ru_4
moschip.ru_6
moschip.ru_9