LM431 Adjustable Precision Zener Shunt Regulator

Check for Samples: LM431

FEATURES

- **Average Temperature Coefficient 50 ppm/°C**
- **Temperature Compensated for Operation Over the Full Temperature Range**
- **Programmable Output Voltage**
- **Fast Turn-On Response**
- **Low Output Noise**

DESCRIPTION

The LM431 is a 3-terminal adjustable shunt regulator with ensured temperature stability over the entire temperature range of operation. The output voltage may be set at any level greater than 2.5V (V_{REF}) up to 36V merely by selecting two external resistors that act as a voltage divided network. Due to the sharp turn-on characteristics this device is an excellent replacement for many zener diode applications.

Connection Diagram

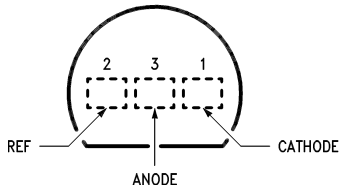

Figure 1. TO-92: Plastic Package Top View

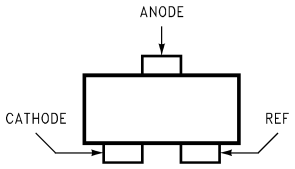

Figure 2. SOT-23: 3-Lead Small Outline Top View

A. Note: NC = Not internally connected.

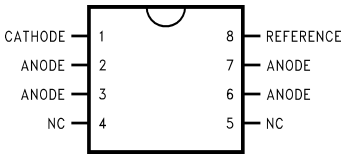

Figure 3. SOIC: 8-Pin Surface Mount Top view

Symbol and Functional Diagrams

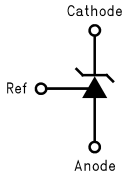

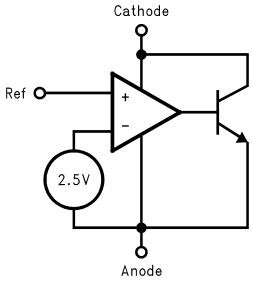

Please be aware that an important notice concerning availability, standard warranty, and use in critical applications of Texas Instruments semiconductor products and disclaimers thereto appears at the end of this data sheet.

All trademarks are the property of their respective owners.

PRODUCTION DATA information is current as of publication date. Products conform to specifications per the terms of the Texas Instruments standard warranty. Production processing does not necessarily include testing of all parameters.

Copyright © 2000–2013, Texas Instruments Incorporated

DC Test Circuits

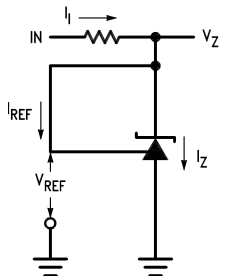

Figure 4. Test Circuit for $V_Z = V_{REF}$

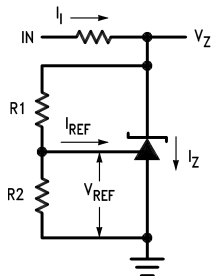

Note: $V_Z = V_{REF}$ (1 + R1/R2) + I_{REF}• R1

Figure 5. Test Circuit for $V_Z > V_{REF}$

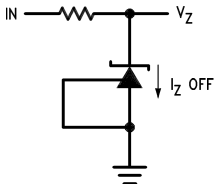

Figure 6. Test Circuit for Off-State Current

These devices have limited built-in ESD protection. The leads should be shorted together or the device placed in conductive foam during storage or handling to prevent electrostatic damage to the MOS gates.

Absolute Maximum Ratings(1)(2)

Storage Temperature Range		−65°C to +150°C
Operating Temperature Range	Industrial (LM431xI)	−40°C to +85°C
	Commercial (LM431xC)	0°C to +70°C
Soldering Information	Infrared or Convection (20 sec.)	235°C
	Wave Soldering (10 sec.)	260°C (lead temp.)
Cathode Voltage		37V
Continuous Cathode Current		−10 mA to +150 mA
Reference Voltage		−0.5V
Reference Input Current		10 mA
Internal Power Dissipation(3)(4)	TO-92 Package	0.78W
	SOIC Package	0.81W
	SOT-23 Package	0.28W

(1) Absolute Maximum Ratings indicate limits beyond which damage to the device may occur. Electrical specifications do not apply when operating the device beyond its rated operating conditions.
(2) If Military/Aerospace specified devices are required, please contact the TI Sales Office/ Distributors for availability and specifications.
(3) $T_{J\ Max}$ = 150°C.
(4) Ratings apply to ambient temperature at 25°C. Above this temperature, derate the TO-92 at 6.2 mW/°C, the SOIC at 6.5 mW/°C, the SOT-23 at 2.2 mW/°C.

Operating Conditions

	Min	Max
Cathode Voltage	V_{REF}	37V
Cathode Current	1.0 mA	100 mA

Copyright © 2000–2013, Texas Instruments Incorporated

LM431 Electrical Characteristics

T_A = 25°C unless otherwise specified

Symbol	Parameter	Conditions		Min	Typ	Max	Units
V_{REF}	Reference Voltage	$V_Z = V_{REF}$, I_I = 10 mA LM431A (*Figure 4*)		2.440	2.495	2.550	V
		$V_Z = V_{REF}$, I_I = 10 mA LM431B (*Figure 4*)		2.470	2.495	2.520	V
		$V_Z = V_{REF}$, I_I = 10 mA LM431C (*Figure 4*)		2.485	2.500	2.510	V
V_{DEV}	Deviation of Reference Input Voltage Over Temperature (1)	$V_Z = V_{REF}$, I_I = 10 mA, T_A = Full Range (*Figure 4*)			8.0	17	mV
$\Delta V_{REF}/\Delta V_Z$	Ratio of the Change in Reference Voltage to the Change in Cathode Voltage	I_Z = 10 mA (*Figure 5*)	V_Z from V_{REF} to 10V		−1.4	−2.7	mV/V
			V_Z from 10V to 36V		−1.0	−2.0	
I_{REF}	Reference Input Current	R_1 = 10 kΩ, R_2 = ∞, I_I = 10 mA (*Figure 5*)			2.0	4.0	μA
$\propto I_{REF}$	Deviation of Reference Input Current over Temperature	R_1 = 10 kΩ, R_2 = ∞, I_I = 10 mA, T_A = Full Range (*Figure 5*)			0.4	1.2	μA
$I_{Z(MIN)}$	Minimum Cathode Current for Regulation	$V_Z = V_{REF}$(*Figure 4*)			0.4	1.0	mA
$I_{Z(OFF)}$	Off-State Current	V_Z = 36V, V_{REF} = 0V (Figure 6)			0.3	1.0	μA
r_Z	Dynamic Output Impedance (2)	$V_Z = V_{REF}$, LM431A, Frequency = 0 Hz (*Figure 4*)				0.75	Ω
		$V_Z = V_{REF}$, LM431B, LM431C Frequency = 0 Hz (*Figure 4*)				0.50	Ω

(1) Deviation of reference input voltage, V_{DEV}, is defined as the maximum variation of the reference input voltage over the full temperature range.

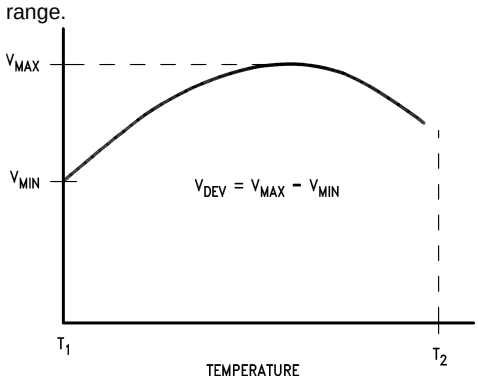

The average temperature coefficient of the reference input voltage, $\propto V_{REF}$, is defined as:

$$\propto V_{REF}\,\frac{ppm}{°C} = \frac{\pm\left[\frac{V_{Max} - V_{Min}}{V_{REF}\,(at\ 25°C)}\right]10^6}{T_2 - T_1} = \frac{\pm\left[\frac{V_{DEV}}{V_{REF}\,(at\ 25°C)}\right]10^6}{T_2 - T_1}$$

Where:
$T_2 - T_1$ = full temperature change (0-70°C).
V_{REF} can be positive or negative depending on whether the slope is positive or negative.
Example: V_{DEV} = 8.0 mV, V_{REF} = 2495 mV, $T_2 - T_1$ = 70°C, slope is positive.

$$\propto V_{REF} = \frac{\left[\frac{8.0\ mV}{2495\ mV}\right]10^6}{70°C} = +46\ ppm/°C$$

(2) The dynamic output impedance, r_Z, is defined as:

$$r_Z = \frac{\Delta V_Z}{\Delta I_Z}$$

When the device is programmed with two external resistors, R1 and R2, (see *Figure 5*), the dynamic output impedance of the overall circuit, r_Z, is defined as:

$$r_Z = \frac{\Delta V_Z}{\Delta I_Z} \cong \left[r_Z\left(1 + \frac{R1}{R2}\right)\right]$$

Equivalent Circuit

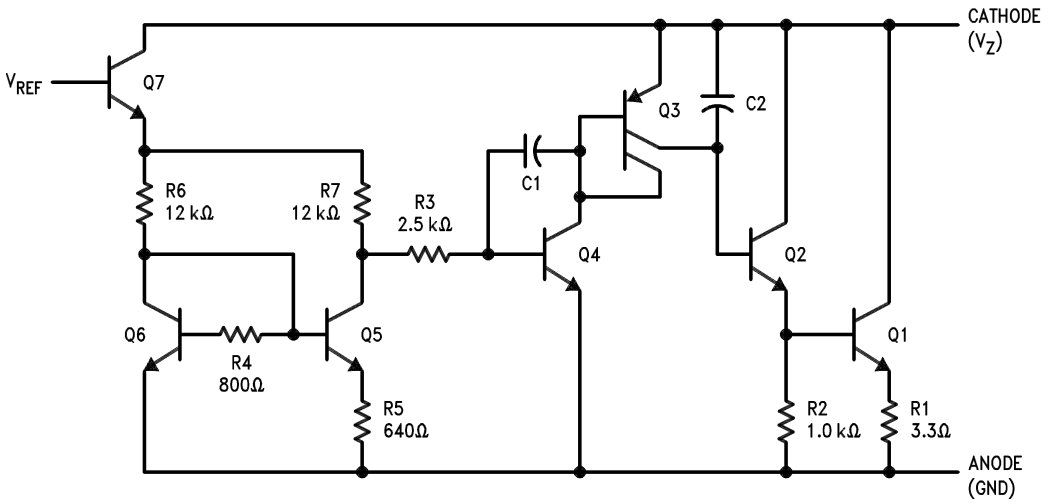

Copyright © 2000–2013, Texas Instruments Incorporated

Typical Performance Characteristics

Input Current vs V_Z

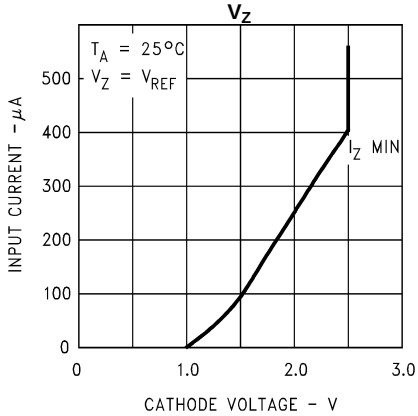

Figure 7.

Thermal Information

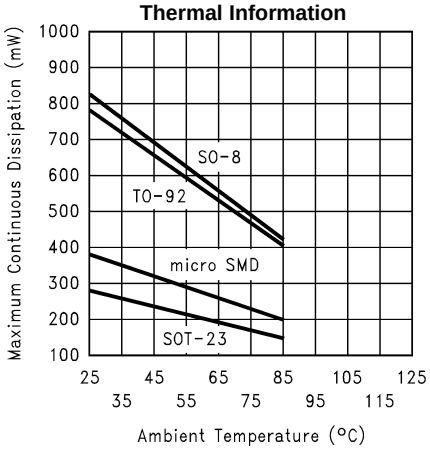

Figure 8.

Input Current vs V_Z

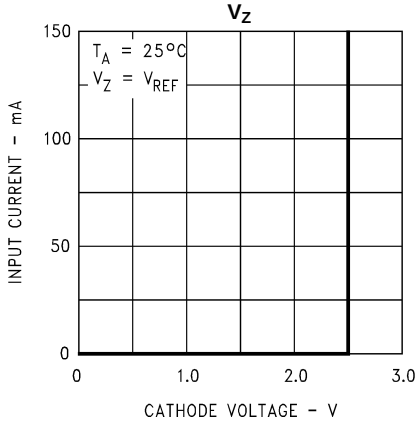

Figure 9.

Dynamic Impedance vs Frequency

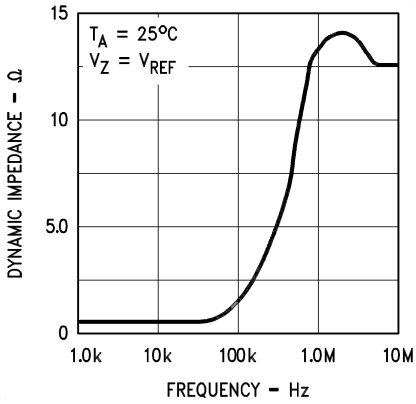

Figure 10.

Stability Boundary Conditions

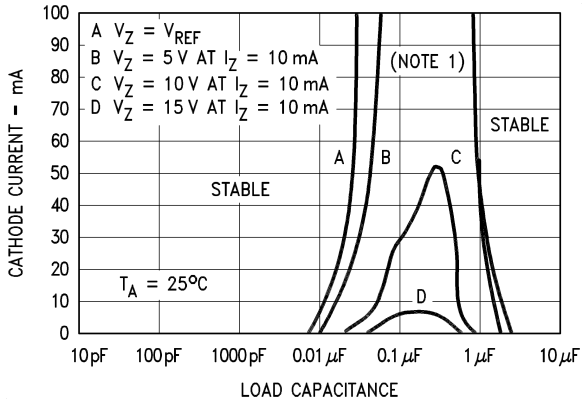

Note: The areas under the curves represent conditions that may cause the device to oscillate. For curves B, C, and D, R2 and V^+ were adjusted to establish the initial V_Z and I_Z conditions with C_L = 0. V^+ and C_L were then adjusted to determine the ranges of stability.

Figure 11.

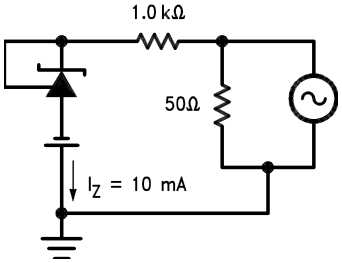

Figure 12.

Typical Performance Characteristics (continued)

Test Circuit for Curve A Above

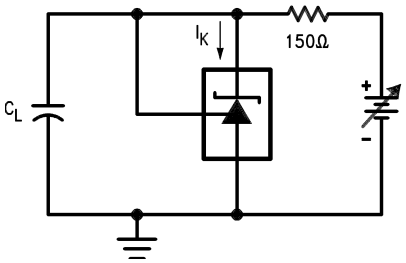

Figure 13.

Test Circuit for Curves B, C and D Above

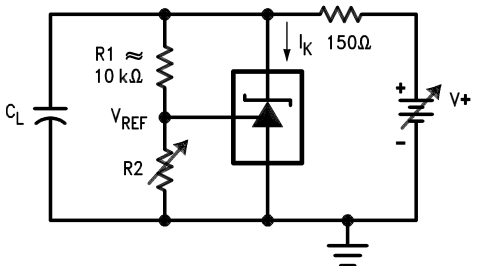

Figure 14.

Copyright © 2000–2013, Texas Instruments Incorporated

Typical Applications

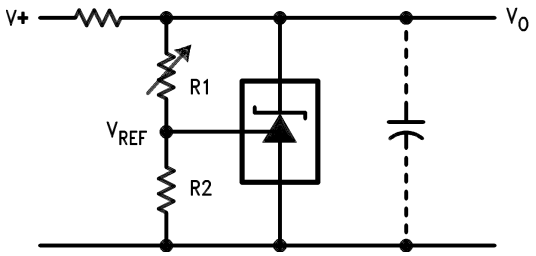

$$V_O \approx \left(1 + \frac{R1}{R2}\right) V_{REF}$$

Figure 15. Shunt Regulator

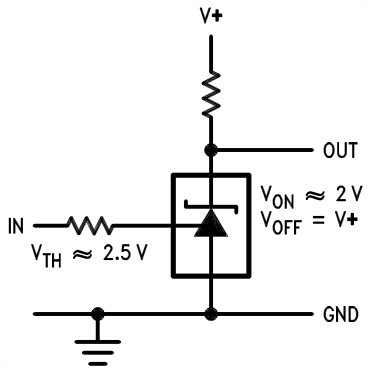

Figure 16. Single Supply Comparator with Temperature Compensated Threshold

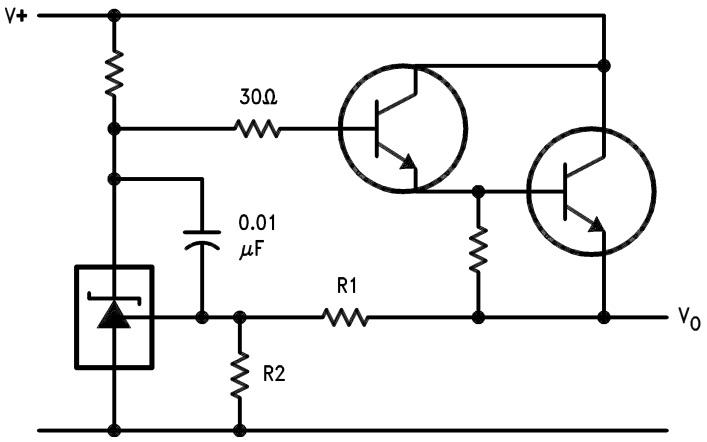

$$V_O \approx \left(1 + \frac{R1}{R2}\right) V_{REF}$$

Figure 17. Series Regulator

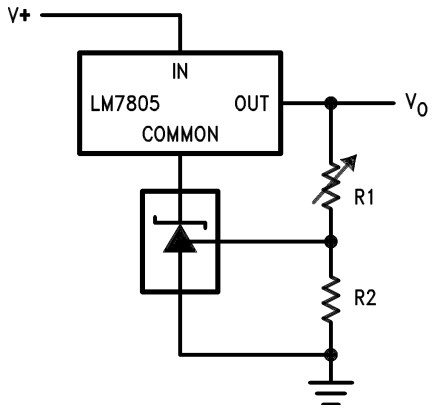

$$V_O = \left(1 + \frac{R1}{R2}\right) V_{REF}$$

$$V_{O\ MIN} = V_{REF} + 5V$$

Figure 18. Output Control of a Three Terminal Fixed Regulator

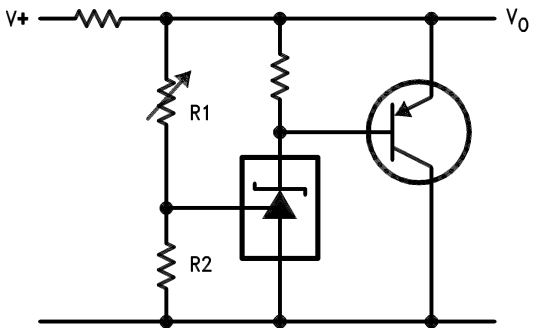

$$V_O \approx \left(1 + \frac{R1}{R2}\right) V_{REF}$$

Figure 19. Higher Current Shunt Regulator

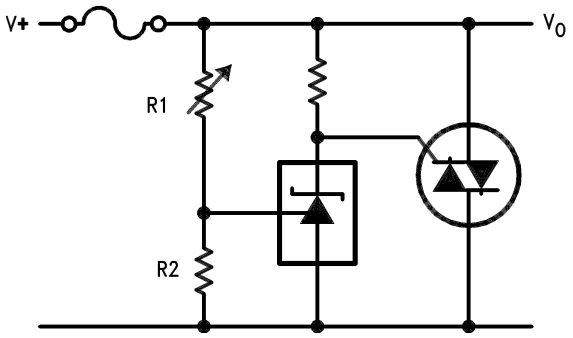

$$V_{LIMIT} \approx \left(1 + \frac{R1}{R2}\right) V_{REF}$$

Figure 20. Crow Bar

Copyright © 2000–2013, Texas Instruments Incorporated

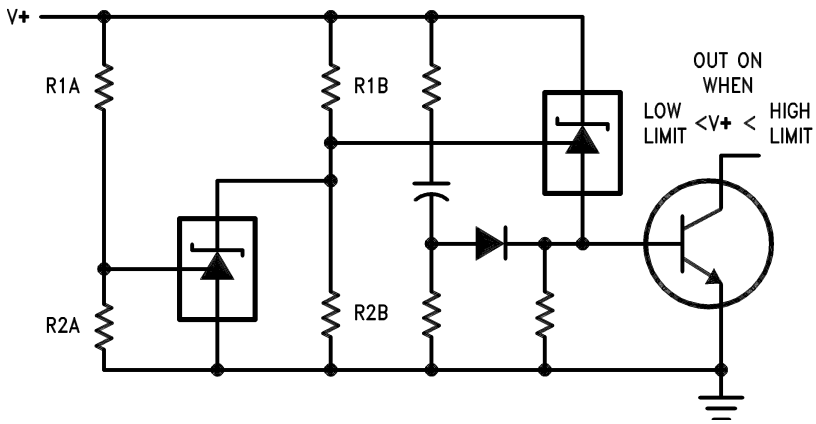

$$\text{LOW LIMIT} \approx V_{REF}\left(1 + \frac{R1B}{R2B}\right) + V_{BE}$$

$$\text{HIGH LIMIT} \approx V_{REF}\left(1 + \frac{R1A}{R2A}\right)$$

Figure 21. Over Voltage/Under Voltage Protection Circuit

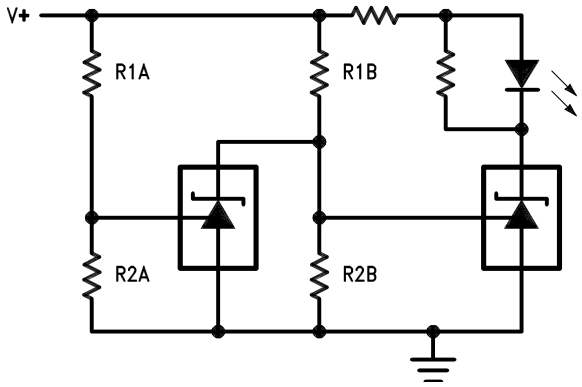

$$\text{LOW LIMIT} \approx V_{REF}\left(1 + \frac{R1B}{R2B}\right)$$

$$\text{HIGH LIMIT} \approx V_{REF}\left(1 + \frac{R1A}{R2A}\right)$$

LED ON WHEN
LOW LIMIT < V^+ < HIGH LIMIT

Figure 22. Voltage Monitor

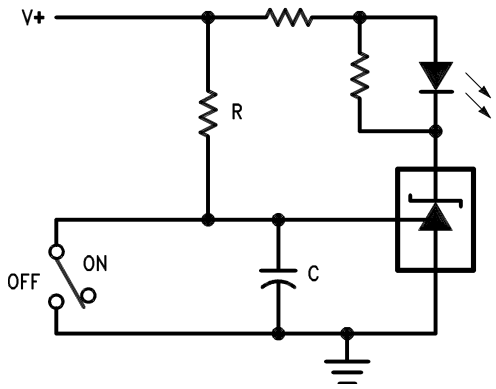

$$\text{DELAY} = R \bullet C \bullet \ell n \frac{V+}{(V^{+}) - V_{REF}}$$

Figure 23. Delay Timer

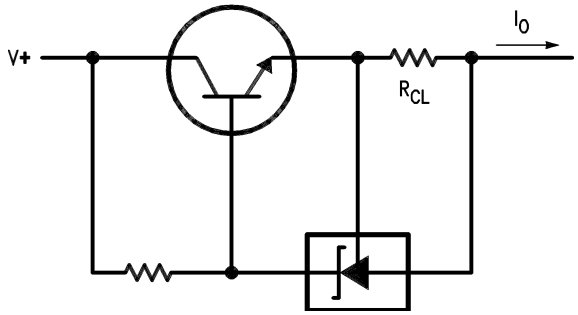

$$I_O = \frac{V_{REF}}{R_{CL}}$$

Figure 24. Current Limiter or Current Source

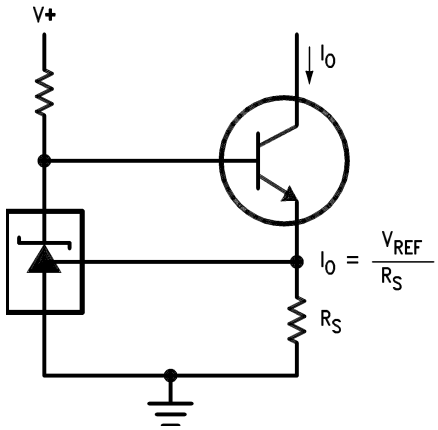

Figure 25. Constant Current Sink

Copyright © 2000–2013, Texas Instruments Incorporated

REVISION HISTORY

Changes from Revision F (April 2013) to Revision G	Page
• Changed layout of National Data Sheet to TI format	10

PACKAGING INFORMATION

Orderable Device	Status (1)	Package Type	Package Drawing	Pins	Package Qty	Eco Plan (2)	Lead/Ball Finish	MSL Peak Temp (3)	Op Temp (°C)	Device Marking (4/5)	Samples
LM431ACM	ACTIVE	SOIC	D	8	95	TBD	Call TI	Call TI	-40 to 85	LM431 ACM	Samples
LM431ACM/NOPB	ACTIVE	SOIC	D	8	95	Green (RoHS & no Sb/Br)	CU SN	Level-1-260C-UNLIM	-40 to 85	LM431 ACM	Samples
LM431ACM3	ACTIVE	SOT-23	DBZ	3	1000	TBD	Call TI	Call TI	-40 to 85	N1F	Samples
LM431ACM3/NOPB	ACTIVE	SOT-23	DBZ	3	1000	Green (RoHS & no Sb/Br)	CU SN	Level-1-260C-UNLIM	-40 to 85	N1F	Samples
LM431ACM3X	ACTIVE	SOT-23	DBZ	3	3000	TBD	Call TI	Call TI	-40 to 85	N1F	Samples
LM431ACM3X/NOPB	ACTIVE	SOT-23	DBZ	3	3000	Green (RoHS & no Sb/Br)	CU SN	Level-1-260C-UNLIM	-40 to 85	N1F	Samples
LM431ACMX	ACTIVE	SOIC	D	8	2500	TBD	Call TI	Call TI	-40 to 85	LM431 ACM	Samples
LM431ACMX/NOPB	ACTIVE	SOIC	D	8	2500	Green (RoHS & no Sb/Br)	CU SN	Level-1-260C-UNLIM	-40 to 85	LM431 ACM	Samples
LM431ACZ/LFT3	ACTIVE	TO-92	LP	3	2000	Green (RoHS & no Sb/Br)	SNCU	Level-1-NA-UNLIM		LM431 ACZ	Samples
LM431ACZ/LFT4	ACTIVE	TO-92	LP	3	2000	Green (RoHS & no Sb/Br)	SNCU	Level-1-NA-UNLIM		LM431 ACZ	Samples
LM431ACZ/NOPB	ACTIVE	TO-92	LP	3	1800	Green (RoHS & no Sb/Br)	SNCU	Level-1-NA-UNLIM	-40 to 85	LM431 ACZ	Samples
LM431AIM	ACTIVE	SOIC	D	8	95	TBD	Call TI	Call TI	-40 to 85	LM431 AIM	Samples
LM431AIM/NOPB	ACTIVE	SOIC	D	8	95	Green (RoHS & no Sb/Br)	CU SN	Level-1-260C-UNLIM	-40 to 85	LM431 AIM	Samples
LM431AIM3	ACTIVE	SOT-23	DBZ	3	1000	TBD	Call TI	Call TI	-40 to 85	N1E	Samples
LM431AIM3/NOPB	ACTIVE	SOT-23	DBZ	3	1000	Green (RoHS & no Sb/Br)	CU SN	Level-1-260C-UNLIM	-40 to 85	N1E	Samples
LM431AIM3X	ACTIVE	SOT-23	DBZ	3	3000	TBD	Call TI	Call TI	-40 to 85	N1E	Samples
LM431AIM3X/NOPB	ACTIVE	SOT-23	DBZ	3	3000	Green (RoHS & no Sb/Br)	CU SN	Level-1-260C-UNLIM	-40 to 85	N1E	Samples
LM431AIMX	ACTIVE	SOIC	D	8	2500	TBD	Call TI	Call TI	-40 to 85	LM431 AIM	Samples

Orderable Device	Status (1)	Package Type	Package Drawing	Pins	Package Qty	Eco Plan (2)	Lead/Ball Finish	MSL Peak Temp (3)	Op Temp (°C)	Device Marking (4/5)	Samples
LM431AIMX/NOPB	ACTIVE	SOIC	D	8	2500	Green (RoHS & no Sb/Br)	CU SN	Level-1-260C-UNLIM	-40 to 85	LM431 AIM	Samples
LM431AIZ/LFT1	ACTIVE	TO-92	LP	3	2000	Green (RoHS & no Sb/Br)	SNCU	Level-1-NA-UNLIM		LM431 AIZ	Samples
LM431AIZ/NOPB	ACTIVE	TO-92	LP	3	1800	Green (RoHS & no Sb/Br)	SNCU	Level-1-NA-UNLIM	-40 to 85	LM431 AIZ	Samples
LM431BCM	ACTIVE	SOIC	D	8	95	TBD	Call TI	Call TI	-40 to 85	431 BCM	Samples
LM431BCM/NOPB	ACTIVE	SOIC	D	8	95	Green (RoHS & no Sb/Br)	CU SN	Level-1-260C-UNLIM	-40 to 85	431 BCM	Samples
LM431BCM3	ACTIVE	SOT-23	DBZ	3	1000	TBD	Call TI	Call TI	-40 to 85	N1D	Samples
LM431BCM3/NOPB	ACTIVE	SOT-23	DBZ	3	1000	Green (RoHS & no Sb/Br)	CU SN	Level-1-260C-UNLIM	-40 to 85	N1D	Samples
LM431BCM3X/NOPB	ACTIVE	SOT-23	DBZ	3	3000	Green (RoHS & no Sb/Br)	CU SN	Level-1-260C-UNLIM	-40 to 85	N1D	Samples
LM431BCMX	ACTIVE	SOIC	D	8	2500	TBD	Call TI	Call TI	-40 to 85	431 BCM	Samples
LM431BCMX/NOPB	ACTIVE	SOIC	D	8	2500	Green (RoHS & no Sb/Br)	CU SN	Level-1-260C-UNLIM	-40 to 85	431 BCM	Samples
LM431BCZ/NOPB	ACTIVE	TO-92	LP	3	1800	Green (RoHS & no Sb/Br)	SNCU	Level-1-NA-UNLIM	-40 to 85	LM431 BCZ	Samples
LM431BIM	ACTIVE	SOIC	D	8	95	TBD	Call TI	Call TI	-40 to 85	431 BIM	Samples
LM431BIM/NOPB	ACTIVE	SOIC	D	8	95	Green (RoHS & no Sb/Br)	CU SN	Level-1-260C-UNLIM	-40 to 85	431 BIM	Samples
LM431BIM3	ACTIVE	SOT-23	DBZ	3	1000	TBD	Call TI	Call TI	-40 to 85	N1C	Samples
LM431BIM3/NOPB	ACTIVE	SOT-23	DBZ	3	1000	Green (RoHS & no Sb/Br)	CU SN	Level-1-260C-UNLIM	-40 to 85	N1C	Samples
LM431BIM3X	ACTIVE	SOT-23	DBZ	3	3000	TBD	Call TI	Call TI	-40 to 85	N1C	Samples
LM431BIM3X/NOPB	ACTIVE	SOT-23	DBZ	3	3000	Green (RoHS & no Sb/Br)	CU SN	Level-1-260C-UNLIM	-40 to 85	N1C	Samples
LM431BIMX/NOPB	ACTIVE	SOIC	D	8	2500	Green (RoHS & no Sb/Br)	CU SN	Level-1-260C-UNLIM	-40 to 85	431 BIM	Samples

Orderable Device	Status (1)	Package Type	Package Drawing	Pins	Package Qty	Eco Plan (2)	Lead/Ball Finish	MSL Peak Temp (3)	Op Temp (°C)	Device Marking (4/5)	Samples
LM431CCM/NOPB	ACTIVE	SOIC	D	8	95	Green (RoHS & no Sb/Br)	CU SN	Level-1-260C-UNLIM	-40 to 85	431 CCM	Samples
LM431CCM3	ACTIVE	SOT-23	DBZ	3	1000	TBD	Call TI	Call TI	-40 to 85	N1B	Samples
LM431CCM3/NOPB	ACTIVE	SOT-23	DBZ	3	1000	Green (RoHS & no Sb/Br)	CU SN	Level-1-260C-UNLIM	-40 to 85	N1B	Samples
LM431CCM3X	ACTIVE	SOT-23	DBZ	3	3000	TBD	Call TI	Call TI	-40 to 85	N1B	Samples
LM431CCM3X/NOPB	ACTIVE	SOT-23	DBZ	3	3000	Green (RoHS & no Sb/Br)	CU SN	Level-1-260C-UNLIM	-40 to 85	N1B	Samples
LM431CCZ/NOPB	ACTIVE	TO-92	LP	3	1800	Green (RoHS & no Sb/Br)	SNCU	Level-1-NA-UNLIM	-40 to 85	LM431 CCZ	Samples
LM431CIM	ACTIVE	SOIC	D	8	95	TBD	Call TI	Call TI	-40 to 85	431 CIM	Samples
LM431CIM/NOPB	ACTIVE	SOIC	D	8	95	Green (RoHS & no Sb/Br)	CU SN	Level-1-260C-UNLIM	-40 to 85	431 CIM	Samples
LM431CIM3	ACTIVE	SOT-23	DBZ	3	1000	TBD	Call TI	Call TI	-40 to 85	N1A	Samples
LM431CIM3/NOPB	ACTIVE	SOT-23	DBZ	3	1000	Green (RoHS & no Sb/Br)	CU SN	Level-1-260C-UNLIM	-40 to 85	N1A	Samples
LM431CIM3X	ACTIVE	SOT-23	DBZ	3	3000	TBD	Call TI	Call TI	-40 to 85	N1A	Samples
LM431CIM3X/NOPB	ACTIVE	SOT-23	DBZ	3	3000	Green (RoHS & no Sb/Br)	CU SN	Level-1-260C-UNLIM	-40 to 85	N1A	Samples
LM431CIZ/LFT1	ACTIVE	TO-92	LP	3	2000	Green (RoHS & no Sb/Br)	SNCU	Level-1-NA-UNLIM		LM431 CIZ	Samples
LM431CIZ/NOPB	ACTIVE	TO-92	LP	3	1800	Green (RoHS & no Sb/Br)	SNCU	Level-1-NA-UNLIM	-40 to 85	LM431 CIZ	Samples

(1) The marketing status values are defined as follows:
ACTIVE: Product device recommended for new designs.
LIFEBUY: TI has announced that the device will be discontinued, and a lifetime-buy period is in effect.
NRND: Not recommended for new designs. Device is in production to support existing customers, but TI does not recommend using this part in a new design.
PREVIEW: Device has been announced but is not in production. Samples may or may not be available.
OBSOLETE: TI has discontinued the production of the device.

(2) Eco Plan - The planned eco-friendly classification: Pb-Free (RoHS), Pb-Free (RoHS Exempt), or Green (RoHS & no Sb/Br) - please check http://www.ti.com/productcontent for the latest availability information and additional product content details.
TBD: The Pb-Free/Green conversion plan has not been defined.

Pb-Free (RoHS): TI's terms "Lead-Free" or "Pb-Free" mean semiconductor products that are compatible with the current RoHS requirements for all 6 substances, including the requirement that lead not exceed 0.1% by weight in homogeneous materials. Where designed to be soldered at high temperatures, TI Pb-Free products are suitable for use in specified lead-free processes.
Pb-Free (RoHS Exempt): This component has a RoHS exemption for either 1) lead-based flip-chip solder bumps used between the die and package, or 2) lead-based die adhesive used between the die and leadframe. The component is otherwise considered Pb-Free (RoHS compatible) as defined above.
Green (RoHS & no Sb/Br): TI defines "Green" to mean Pb-Free (RoHS compatible), and free of Bromine (Br) and Antimony (Sb) based flame retardants (Br or Sb do not exceed 0.1% by weight in homogeneous material)

(3) MSL, Peak Temp. -- The Moisture Sensitivity Level rating according to the JEDEC industry standard classifications, and peak solder temperature.

(4) There may be additional marking, which relates to the logo, the lot trace code information, or the environmental category on the device.

(5) Multiple Device Markings will be inside parentheses. Only one Device Marking contained in parentheses and separated by a "~" will appear on a device. If a line is indented then it is a continuation of the previous line and the two combined represent the entire Device Marking for that device.

Important Information and Disclaimer: The information provided on this page represents TI's knowledge and belief as of the date that it is provided. TI bases its knowledge and belief on information provided by third parties, and makes no representation or warranty as to the accuracy of such information. Efforts are underway to better integrate information from third parties. TI has taken and continues to take reasonable steps to provide representative and accurate information but may not have conducted destructive testing or chemical analysis on incoming materials and chemicals. TI and TI suppliers consider certain information to be proprietary, and thus CAS numbers and other limited information may not be available for release.

In no event shall TI's liability arising out of such information exceed the total purchase price of the TI part(s) at issue in this document sold by TI to Customer on an annual basis.

TAPE AND REEL INFORMATION

REEL DIMENSIONS

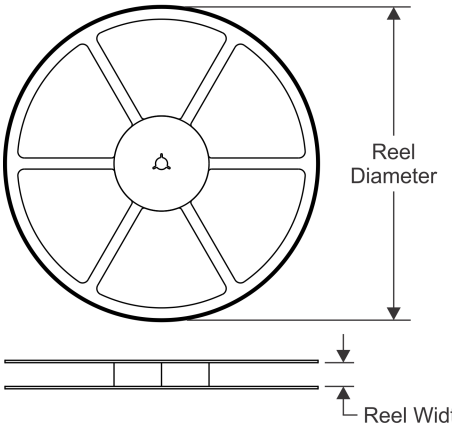

TAPE DIMENSIONS

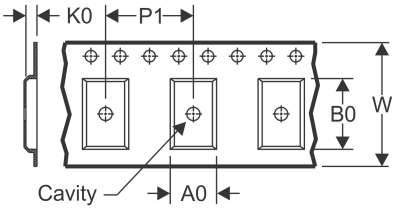

A0	Dimension designed to accommodate the component width
B0	Dimension designed to accommodate the component length
K0	Dimension designed to accommodate the component thickness
W	Overall width of the carrier tape
P1	Pitch between successive cavity centers

QUADRANT ASSIGNMENTS FOR PIN 1 ORIENTATION IN TAPE

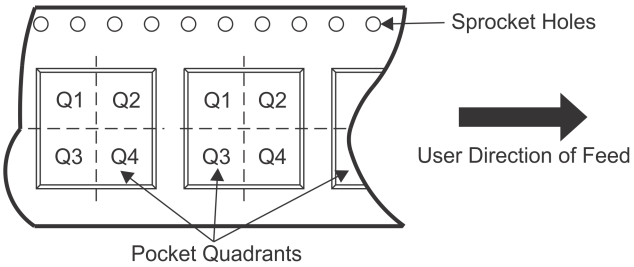

*All dimensions are nominal

Device	Package Type	Package Drawing	Pins	SPQ	Reel Diameter (mm)	Reel Width W1 (mm)	A0 (mm)	B0 (mm)	K0 (mm)	P1 (mm)	W (mm)	Pin1 Quadrant
LM431ACM3	SOT-23	DBZ	3	1000	178.0	8.4	3.3	2.9	1.22	4.0	8.0	Q3
LM431ACM3/NOPB	SOT-23	DBZ	3	1000	178.0	8.4	3.3	2.9	1.22	4.0	8.0	Q3
LM431ACM3X	SOT-23	DBZ	3	3000	178.0	8.4	3.3	2.9	1.22	4.0	8.0	Q3
LM431ACM3X/NOPB	SOT-23	DBZ	3	3000	178.0	8.4	3.3	2.9	1.22	4.0	8.0	Q3
LM431ACMX	SOIC	D	8	2500	330.0	12.4	6.5	5.4	2.0	8.0	12.0	Q1
LM431ACMX/NOPB	SOIC	D	8	2500	330.0	12.4	6.5	5.4	2.0	8.0	12.0	Q1
LM431AIM3	SOT-23	DBZ	3	1000	178.0	8.4	3.3	2.9	1.22	4.0	8.0	Q3
LM431AIM3/NOPB	SOT-23	DBZ	3	1000	178.0	8.4	3.3	2.9	1.22	4.0	8.0	Q3
LM431AIM3X	SOT-23	DBZ	3	3000	178.0	8.4	3.3	2.9	1.22	4.0	8.0	Q3
LM431AIM3X/NOPB	SOT-23	DBZ	3	3000	178.0	8.4	3.3	2.9	1.22	4.0	8.0	Q3
LM431AIMX	SOIC	D	8	2500	330.0	12.4	6.5	5.4	2.0	8.0	12.0	Q1
LM431AIMX/NOPB	SOIC	D	8	2500	330.0	12.4	6.5	5.4	2.0	8.0	12.0	Q1
LM431BCM3	SOT-23	DBZ	3	1000	178.0	8.4	3.3	2.9	1.22	4.0	8.0	Q3
LM431BCM3/NOPB	SOT-23	DBZ	3	1000	178.0	8.4	3.3	2.9	1.22	4.0	8.0	Q3
LM431BCM3X/NOPB	SOT-23	DBZ	3	3000	178.0	8.4	3.3	2.9	1.22	4.0	8.0	Q3
LM431BCMX	SOIC	D	8	2500	330.0	12.4	6.5	5.4	2.0	8.0	12.0	Q1
LM431BCMX/NOPB	SOIC	D	8	2500	330.0	12.4	6.5	5.4	2.0	8.0	12.0	Q1
LM431BIM3	SOT-23	DBZ	3	1000	178.0	8.4	3.3	2.9	1.22	4.0	8.0	Q3

Device	Package Type	Package Drawing	Pins	SPQ	Reel Diameter (mm)	Reel Width W1 (mm)	A0 (mm)	B0 (mm)	K0 (mm)	P1 (mm)	W (mm)	Pin1 Quadrant
LM431BIM3/NOPB	SOT-23	DBZ	3	1000	178.0	8.4	3.3	2.9	1.22	4.0	8.0	Q3
LM431BIM3X	SOT-23	DBZ	3	3000	178.0	8.4	3.3	2.9	1.22	4.0	8.0	Q3
LM431BIM3X/NOPB	SOT-23	DBZ	3	3000	178.0	8.4	3.3	2.9	1.22	4.0	8.0	Q3
LM431BIMX/NOPB	SOIC	D	8	2500	330.0	12.4	6.5	5.4	2.0	8.0	12.0	Q1
LM431CCM3	SOT-23	DBZ	3	1000	178.0	8.4	3.3	2.9	1.22	4.0	8.0	Q3
LM431CCM3/NOPB	SOT-23	DBZ	3	1000	178.0	8.4	3.3	2.9	1.22	4.0	8.0	Q3
LM431CCM3X	SOT-23	DBZ	3	3000	178.0	8.4	3.3	2.9	1.22	4.0	8.0	Q3
LM431CCM3X/NOPB	SOT-23	DBZ	3	3000	178.0	8.4	3.3	2.9	1.22	4.0	8.0	Q3
LM431CIM3	SOT-23	DBZ	3	1000	178.0	8.4	3.3	2.9	1.22	4.0	8.0	Q3
LM431CIM3/NOPB	SOT-23	DBZ	3	1000	178.0	8.4	3.3	2.9	1.22	4.0	8.0	Q3
LM431CIM3X	SOT-23	DBZ	3	3000	178.0	8.4	3.3	2.9	1.22	4.0	8.0	Q3
LM431CIM3X/NOPB	SOT-23	DBZ	3	3000	178.0	8.4	3.3	2.9	1.22	4.0	8.0	Q3

TAPE AND REEL BOX DIMENSIONS

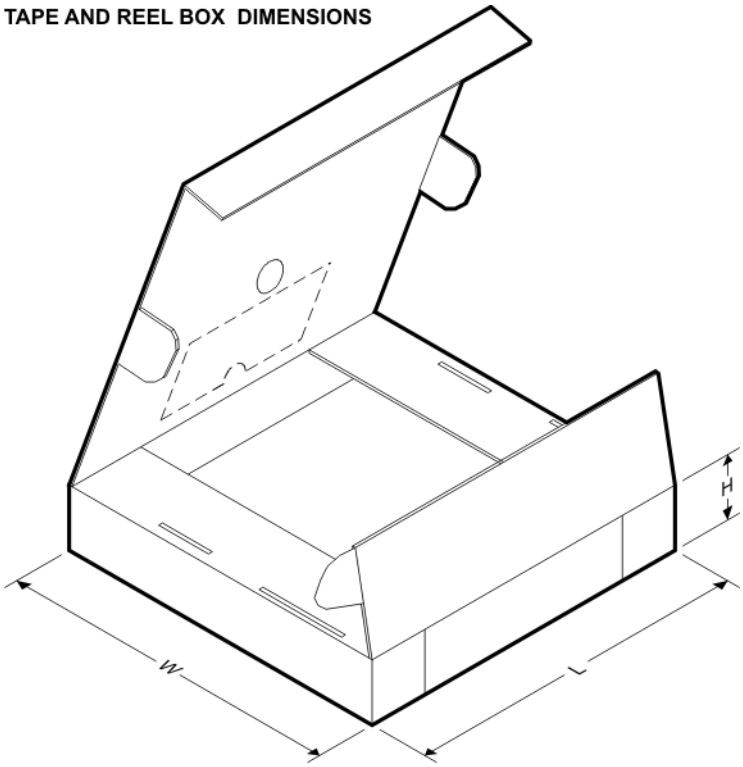

*All dimensions are nominal

Device	Package Type	Package Drawing	Pins	SPQ	Length (mm)	Width (mm)	Height (mm)
LM431ACM3	SOT-23	DBZ	3	1000	210.0	185.0	35.0
LM431ACM3/NOPB	SOT-23	DBZ	3	1000	210.0	185.0	35.0
LM431ACM3X	SOT-23	DBZ	3	3000	210.0	185.0	35.0
LM431ACM3X/NOPB	SOT-23	DBZ	3	3000	210.0	185.0	35.0
LM431ACMX	SOIC	D	8	2500	367.0	367.0	35.0

Device	Package Type	Package Drawing	Pins	SPQ	Length (mm)	Width (mm)	Height (mm)
LM431ACMX/NOPB	SOIC	D	8	2500	367.0	367.0	35.0
LM431AIM3	SOT-23	DBZ	3	1000	210.0	185.0	35.0
LM431AIM3/NOPB	SOT-23	DBZ	3	1000	210.0	185.0	35.0
LM431AIM3X	SOT-23	DBZ	3	3000	210.0	185.0	35.0
LM431AIM3X/NOPB	SOT-23	DBZ	3	3000	210.0	185.0	35.0
LM431AIMX	SOIC	D	8	2500	367.0	367.0	35.0
LM431AIMX/NOPB	SOIC	D	8	2500	367.0	367.0	35.0
LM431BCM3	SOT-23	DBZ	3	1000	210.0	185.0	35.0
LM431BCM3/NOPB	SOT-23	DBZ	3	1000	210.0	185.0	35.0
LM431BCM3X/NOPB	SOT-23	DBZ	3	3000	210.0	185.0	35.0
LM431BCMX	SOIC	D	8	2500	367.0	367.0	35.0
LM431BCMX/NOPB	SOIC	D	8	2500	367.0	367.0	35.0
LM431BIM3	SOT-23	DBZ	3	1000	210.0	185.0	35.0
LM431BIM3/NOPB	SOT-23	DBZ	3	1000	210.0	185.0	35.0
LM431BIM3X	SOT-23	DBZ	3	3000	210.0	185.0	35.0
LM431BIM3X/NOPB	SOT-23	DBZ	3	3000	210.0	185.0	35.0
LM431BIMX/NOPB	SOIC	D	8	2500	367.0	367.0	35.0
LM431CCM3	SOT-23	DBZ	3	1000	210.0	185.0	35.0
LM431CCM3/NOPB	SOT-23	DBZ	3	1000	210.0	185.0	35.0
LM431CCM3X	SOT-23	DBZ	3	3000	210.0	185.0	35.0
LM431CCM3X/NOPB	SOT-23	DBZ	3	3000	210.0	185.0	35.0
LM431CIM3	SOT-23	DBZ	3	1000	210.0	185.0	35.0
LM431CIM3/NOPB	SOT-23	DBZ	3	1000	210.0	185.0	35.0
LM431CIM3X	SOT-23	DBZ	3	3000	210.0	185.0	35.0
LM431CIM3X/NOPB	SOT-23	DBZ	3	3000	210.0	185.0	35.0

DBZ (R–PDSO–G3) PLASTIC SMALL–OUTLINE

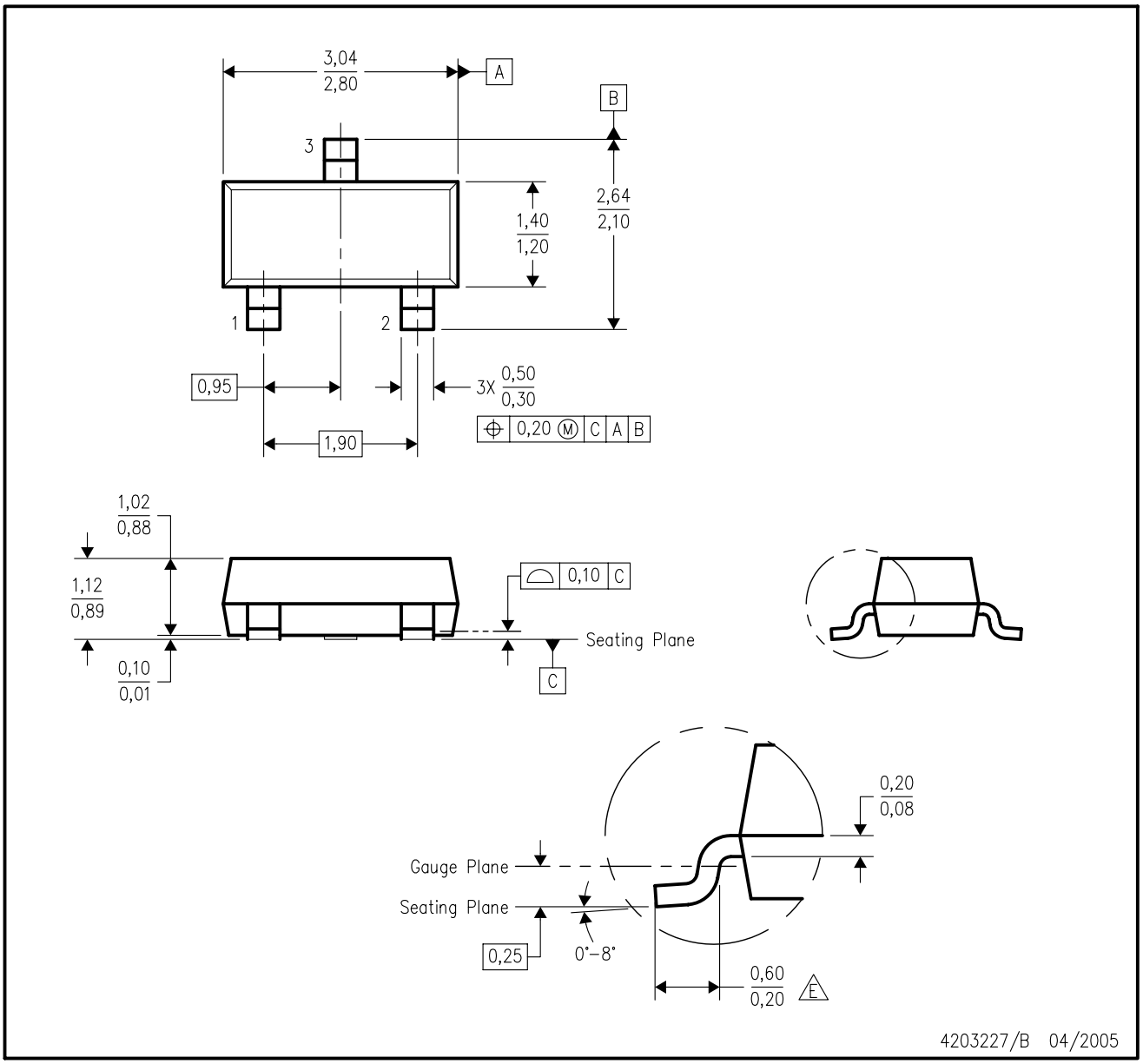

NOTES:
A. All linear dimensions are in millimeters. Dimensioning and tolerancing per ASME Y14.5M–1994.
B. This drawing is subject to change without notice.
C. Lead dimensions are inclusive of plating.
D. Body dimensions are exclusive of mold flash and protrusion. Mold flash and protrusion not to exceed 0.25 per side.
E. Falls within JEDEC TO–236 variation AB, except minimum foot length.

D (R–PDSO–G8) PLASTIC SMALL OUTLINE

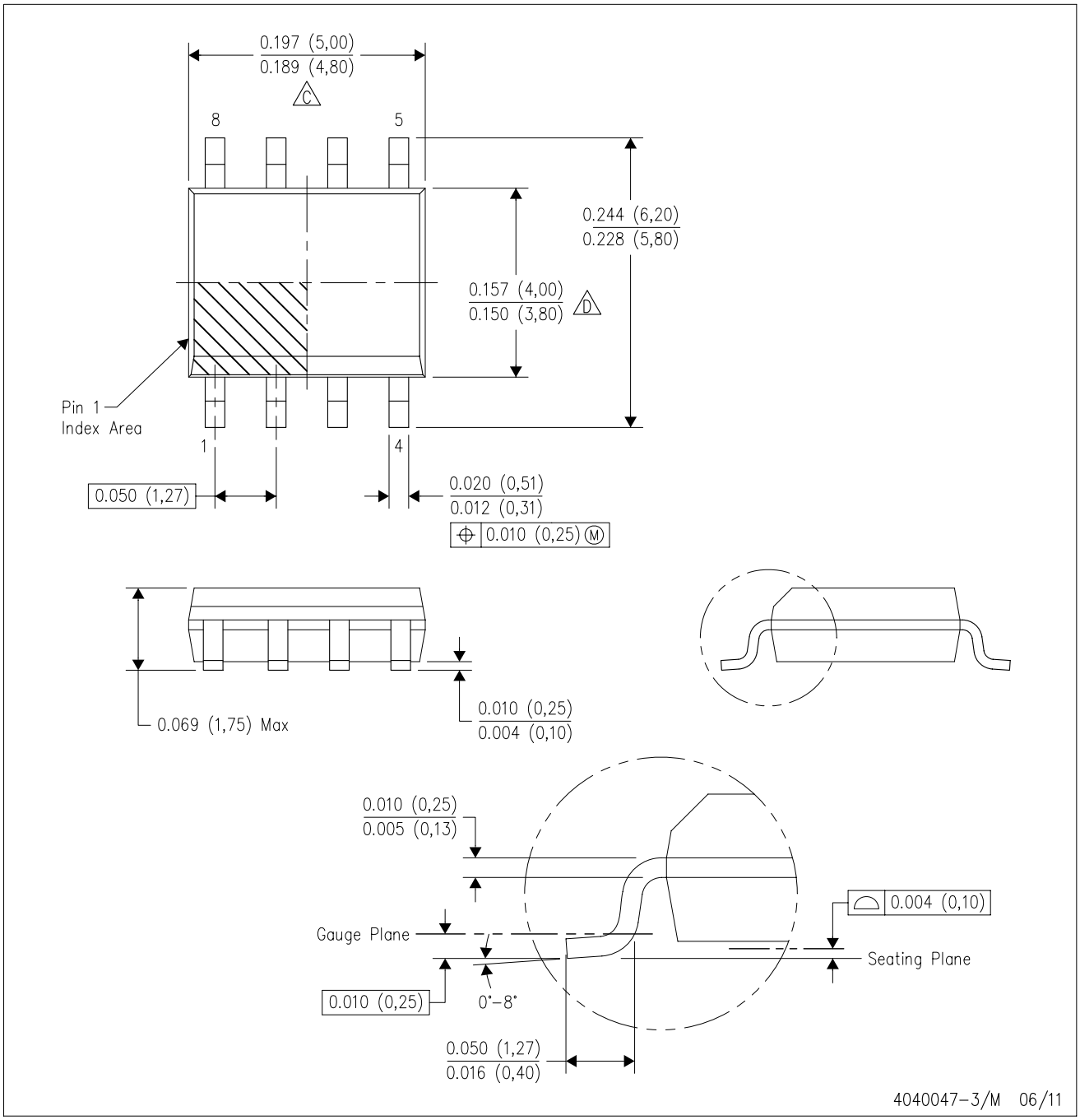

NOTES:
A. All linear dimensions are in inches (millimeters).
B. This drawing is subject to change without notice.
C. Body length does not include mold flash, protrusions, or gate burrs. Mold flash, protrusions, or gate burrs shall not exceed 0.006 (0,15) each side.
D. Body width does not include interlead flash. Interlead flash shall not exceed 0.017 (0,43) each side.
E. Reference JEDEC MS–012 variation AA.

LP (O–PBCY–W3) PLASTIC CYLINDRICAL PACKAGE

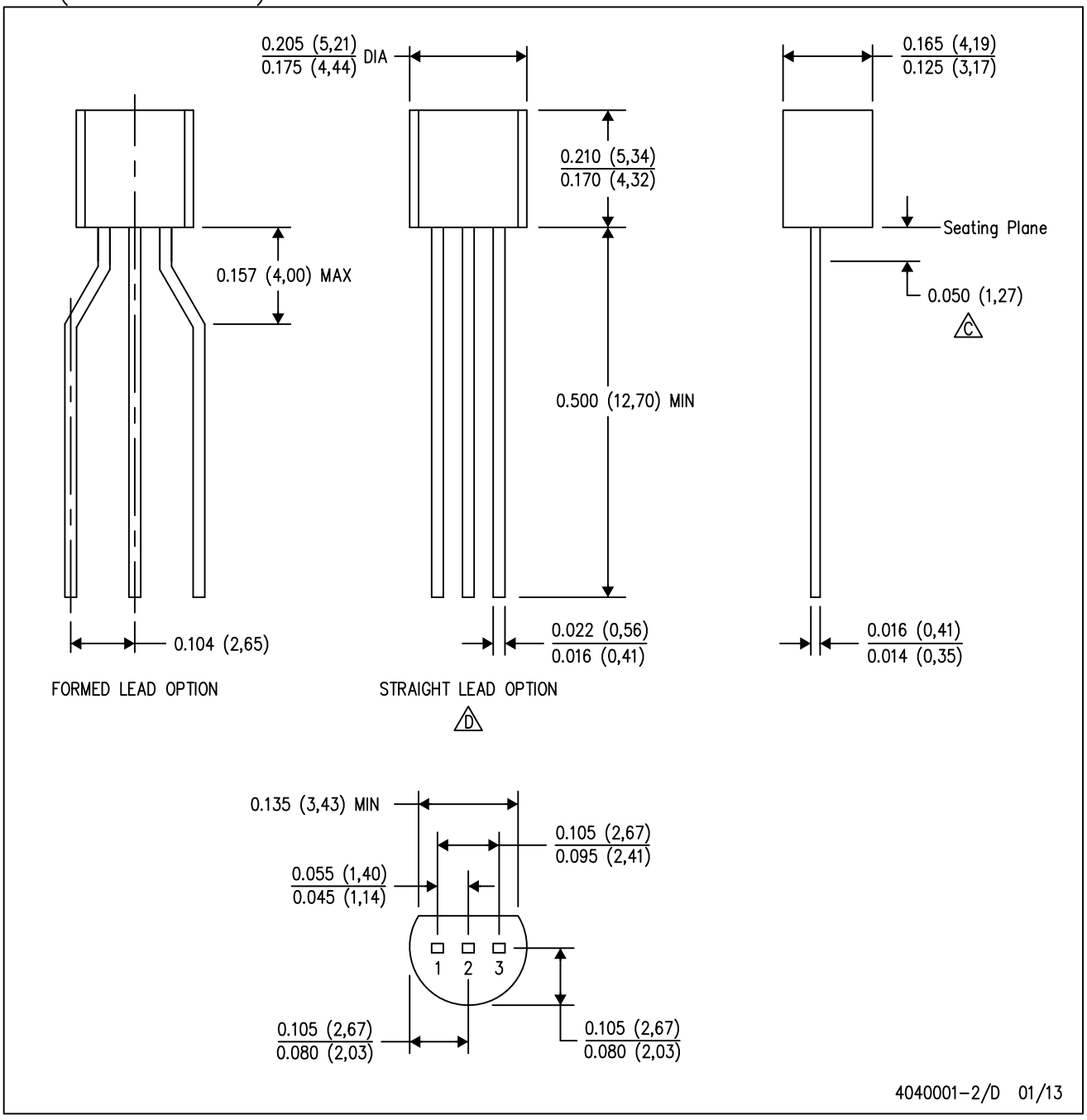

NOTES: A. All linear dimensions are in inches (millimeters).
B. This drawing is subject to change without notice.
C. Lead dimensions are not controlled within this area.
D. Falls within JEDEC TO–226 Variation AA (TO–226 replaces TO–92).
E. Shipping Method:
Straight lead option available in either bulk pack or tape & reel.
Formed lead option available in tape & reel or ammo pack.
Specific products can be offered in limited combinations of shipping mediums and lead options.
Consult product folder for more information on available options.

LP (O–PBCY–W3) PLASTIC CYLINDRICAL PACKAGE

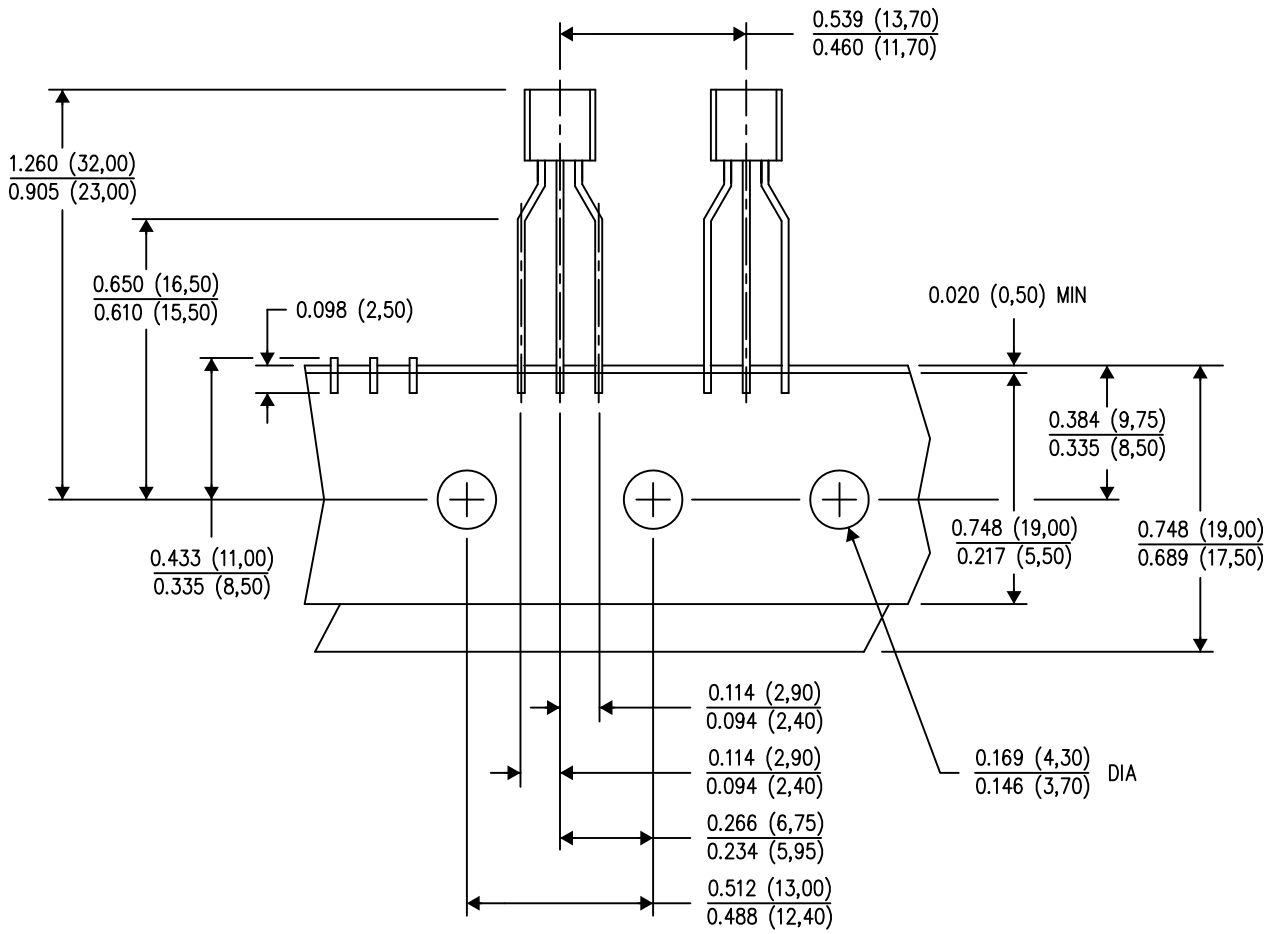

TAPE & REEL

4040001–3/D 01/13

NOTES:
A. All linear dimensions are in inches (millimeters).
B. This drawing is subject to change without notice.
C. Tape and Reel information for the Formed Lead Option package.

IMPORTANT NOTICE

Texas Instruments Incorporated and its subsidiaries (TI) reserve the right to make corrections, enhancements, improvements and other changes to its semiconductor products and services per JESD46, latest issue, and to discontinue any product or service per JESD48, latest issue. Buyers should obtain the latest relevant information before placing orders and should verify that such information is current and complete. All semiconductor products (also referred to herein as “components”) are sold subject to TI’s terms and conditions of sale supplied at the time of order acknowledgment.

TI warrants performance of its components to the specifications applicable at the time of sale, in accordance with the warranty in TI’s terms and conditions of sale of semiconductor products. Testing and other quality control techniques are used to the extent TI deems necessary to support this warranty. Except where mandated by applicable law, testing of all parameters of each component is not necessarily performed.

TI assumes no liability for applications assistance or the design of Buyers’ products. Buyers are responsible for their products and applications using TI components. To minimize the risks associated with Buyers’ products and applications, Buyers should provide adequate design and operating safeguards.

TI does not warrant or represent that any license, either express or implied, is granted under any patent right, copyright, mask work right, or other intellectual property right relating to any combination, machine, or process in which TI components or services are used. Information published by TI regarding third-party products or services does not constitute a license to use such products or services or a warranty or endorsement thereof. Use of such information may require a license from a third party under the patents or other intellectual property of the third party, or a license from TI under the patents or other intellectual property of TI.

Reproduction of significant portions of TI information in TI data books or data sheets is permissible only if reproduction is without alteration and is accompanied by all associated warranties, conditions, limitations, and notices. TI is not responsible or liable for such altered documentation. Information of third parties may be subject to additional restrictions.

Resale of TI components or services with statements different from or beyond the parameters stated by TI for that component or service voids all express and any implied warranties for the associated TI component or service and is an unfair and deceptive business practice. TI is not responsible or liable for any such statements.

Buyer acknowledges and agrees that it is solely responsible for compliance with all legal, regulatory and safety-related requirements concerning its products, and any use of TI components in its applications, notwithstanding any applications-related information or support that may be provided by TI. Buyer represents and agrees that it has all the necessary expertise to create and implement safeguards which anticipate dangerous consequences of failures, monitor failures and their consequences, lessen the likelihood of failures that might cause harm and take appropriate remedial actions. Buyer will fully indemnify TI and its representatives against any damages arising out of the use of any TI components in safety-critical applications.

In some cases, TI components may be promoted specifically to facilitate safety-related applications. With such components, TI’s goal is to help enable customers to design and create their own end-product solutions that meet applicable functional safety standards and requirements. Nonetheless, such components are subject to these terms.

No TI components are authorized for use in FDA Class III (or similar life-critical medical equipment) unless authorized officers of the parties have executed a special agreement specifically governing such use.

Only those TI components which TI has specifically designated as military grade or “enhanced plastic” are designed and intended for use in military/aerospace applications or environments. Buyer acknowledges and agrees that any military or aerospace use of TI components which have ***not*** been so designated is solely at the Buyer's risk, and that Buyer is solely responsible for compliance with all legal and regulatory requirements in connection with such use.

TI has specifically designated certain components as meeting ISO/TS16949 requirements, mainly for automotive use. In any case of use of non-designated products, TI will not be responsible for any failure to meet ISO/TS16949.

Products		**Applications**	
Audio	www.ti.com/audio	Automotive and Transportation	www.ti.com/automotive
Amplifiers	amplifier.ti.com	Communications and Telecom	www.ti.com/communications
Data Converters	dataconverter.ti.com	Computers and Peripherals	www.ti.com/computers
DLP® Products	www.dlp.com	Consumer Electronics	www.ti.com/consumer-apps
DSP	dsp.ti.com	Energy and Lighting	www.ti.com/energy
Clocks and Timers	www.ti.com/clocks	Industrial	www.ti.com/industrial
Interface	interface.ti.com	Medical	www.ti.com/medical
Logic	logic.ti.com	Security	www.ti.com/security
Power Mgmt	power.ti.com	Space, Avionics and Defense	www.ti.com/space-avionics-defense
Microcontrollers	microcontroller.ti.com	Video and Imaging	www.ti.com/video
RFID	www.ti-rfid.com		
OMAP Applications Processors	www.ti.com/omap	**TI E2E Community**	e2e.ti.com
Wireless Connectivity	www.ti.com/wirelessconnectivity		

Mailing Address: Texas Instruments, Post Office Box 655303, Dallas, Texas 75265
Copyright © 2013, Texas Instruments Incorporated

Общество с ограниченной ответственностью «МосЧип» ИНН 7719860671 / КПП 771901001
Адрес: 105318, г.Москва, ул.Щербаковская д.3, офис 1107

Данный компонент на территории Российской Федерации

Вы можете приобрести в компании MosChip.

Для оперативного оформления запроса Вам необходимо перейти по данной ссылке:

http://moschip.ru/get-element

Вы можете разместить у нас заказ для любого Вашего проекта, будь то серийное производство или разработка единичного прибора.

В нашем ассортименте представлены ведущие мировые производители активных и пассивных электронных компонентов.

Нашей специализацией является поставка электронной компонентной базы двойного назначения, продукции таких производителей как XILINX, Intel (ex.ALTERA), Vicor, Microchip, Texas Instruments, Analog Devices, Mini-Circuits, Amphenol, Glenair.

Сотрудничество с глобальными дистрибьюторами электронных компонентов, предоставляет возможность заказывать и получать с международных складов практически любой перечень компонентов в оптимальные для Вас сроки.

На всех этапах разработки и производства наши партнеры могут получить квалифицированную поддержку опытных инженеров.

Система менеджмента качества компании отвечает требованиям в соответствии с ГОСТ Р ИСО 9001, ГОСТ РВ 0015-002 и ЭС РД 009

Офис по работе с юридическими лицами:

105318, г.Москва, ул.Щербаковская д.3, офис 1107, 1118, ДЦ «Щербаковский»

Телефон: +7 495 668-12-70 (многоканальный)

Факс: +7 495 668-12-70 (доб.304)

E-mail: info@moschip.ru

Skype отдела продаж:
moschip.ru
moschip.ru_4
moschip.ru_6
moschip.ru_9