Future Technology Devices International

Datasheet

UMFT230XA USB to Basic UART Development Module

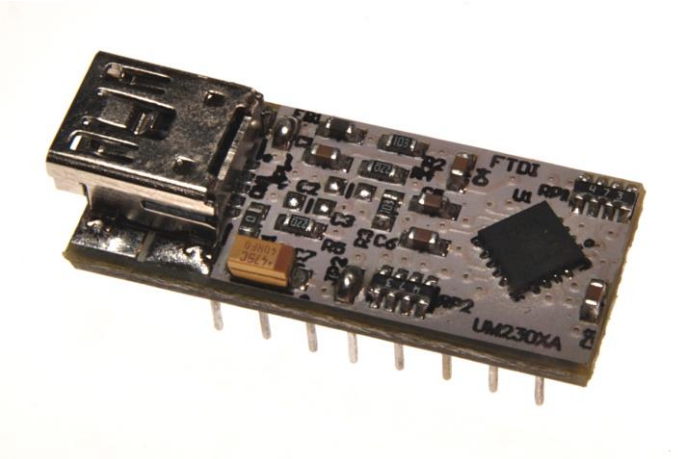

UMFT230XA is a USB to Basic UART DIP module with a 0.3" row pitch.

1 Introduction

The UMFT230XA is a development module for FTDI's FT230XQ, one of the devices from FTDI's range of USB interface bridging integrated circuit devices. FT230X is a USB to UART interface with a battery charger detection feature, which can allow batteries to be charged with a higher current from a dedicated charger port (without the FT230X being enumerated). In addition, asynchronous and synchronous bit bang interface modes are available. The internally generated clock (6MHz, 12MHz and 24MHz) can be brought out of the on one of the CBUS pin to be used to drive a microprocessor or external logic.

The UMFT230XA is a module which is designed to plug into a standard 0.3" wide 16 pin DIP socket. All components used, including the FT230XQ are Pb-free (RoHS compliant).

1.1 Features

The UMFT230XA is fitted with a FT230XQ; all the features of the FT230X can be utilized with the UMFT230XA. For a full list of the FT230X's features please see the FT230X datasheet which can be found by clicking here.
In addition to the features listed in the FT230X datasheet, the UMFT230XA has the following features:

- Small PCB assembly module designed to fit a standard 7.62mm (0.3") wide 16 pin DIP socket. Pins are on a 2.54mm (0.1") pitch.
- On board USB 'mini-B' socket allows module to be connected to a PC via a standard A to mini-B USB cable.
- Functionally configurable using solder links. The default solder links setup enables the module to function without peripheral wires or application board. Other configurations enable external power supply options and variation of logic reference levels.

Use of FTDI devices in life support and/or safety applications is entirely at the user's risk, and the user agrees to defend, indemnify and hold harmless FTDI from any and all damages, claims, suits or expense resulting from such use.

Table of Contents

1 Introduction 1
1.1 Features 1
2 Driver Support 3
3 Ordering Information & TID 3
4 UMFT230XA Signals and Configurations 4
4.1 UMFT230XA Pin Out 4
4.2 Signal Descriptions 5
4.3 CBUS Signal Options 6
5 Module Configurations 7
5.1 Solder Link Configuration Options 7
5.2 Solder Link Modifications 7
5.3 Bus Power Configuration 8
5.4 Self Powered Configuration 9
5.5 USB Bus Powered with Power Switching Configuration 10
5.6 Variable IO Voltage Supply 11
5.7 3.3V Voltage Supply 12
5.8 Configuring the MTP ROM 12
6 Module Dimensions 13
7 IC Package Markings 13
8 UMFT230XA Module Circuit Schematic 14
9 Internal MTPROM Configuration 15
10 Contact Information 16
Appendix A – List of Figures and Tables 18
Appendix B – Revision History 19

Copyright © 2013 Future Technology Devices International Limited

2 Driver Support

Royalty-Free VIRTUAL COM PORT (VCP) DRIVERS for:

- Windows 8 32,64-bit
- Windows 7 32,64-bit
- Windows Vista
- Windows XP 32,64-bit
- Windows XP Embedded
- Windows CE.NET 4.2 , 5.0 and 6.0
- MAC OS OS-X
- Linux 3.0 and greater
- Android

Royalty-Free D2XX Direct Drivers (USB Drivers + DLL S/W Interface):

- Windows 8 32,64-bit
- Windows 7 32,64-bit
- Windows Vista
- Windows XP 32,64-bit
- Windows XP Embedded.
- Windows CE.NET 4.2, 5.0 and 6.0
- MAC OS OS-X
- Linux 3.0 and greater
- Android

The drivers listed above are all available to download for free from www.ftdichip.com. Various 3rd Party Drivers are also available for various other operating systems - visit www.ftdichip.com for details.

3 Ordering Information & TID

Module Code	Utilised IC Code	TID	Description
UMFT201XA-01	FT201XQ	40001460	USB to I^2C evaluation module.
UMFT220XA-01	FT220XQ	40001461	USB to 4-bit SPI/FT1248 evaluation module.
UMFT221XA-01	FT221XQ	40001462	USB to 8-bit SPI/FT1248 evaluation module.
UMFT230XA-01	FT230XQ	40001463	USB to Basic UART evaluation module. (long pin)
UMFT230XA-02	FT230XQ	40001463	USB to Basic UART evaluation module. (short pin)
UMFT231XA-01	FT231XQ	40001464	USB to Full-Handshake UART evaluation module.
UMFT240XA-01	FT240XQ	40001466	USB to 8-bit 245 FIFO evaluation module.

TID is the test identification code. Note that this TID is for revision D silicon.

4

4

4

4

4

4

Copyright © 2013 Future Technology Devices International Limited

4 UMFT230XA Signals and Configurations

4.1 UMFT230XA Pin Out

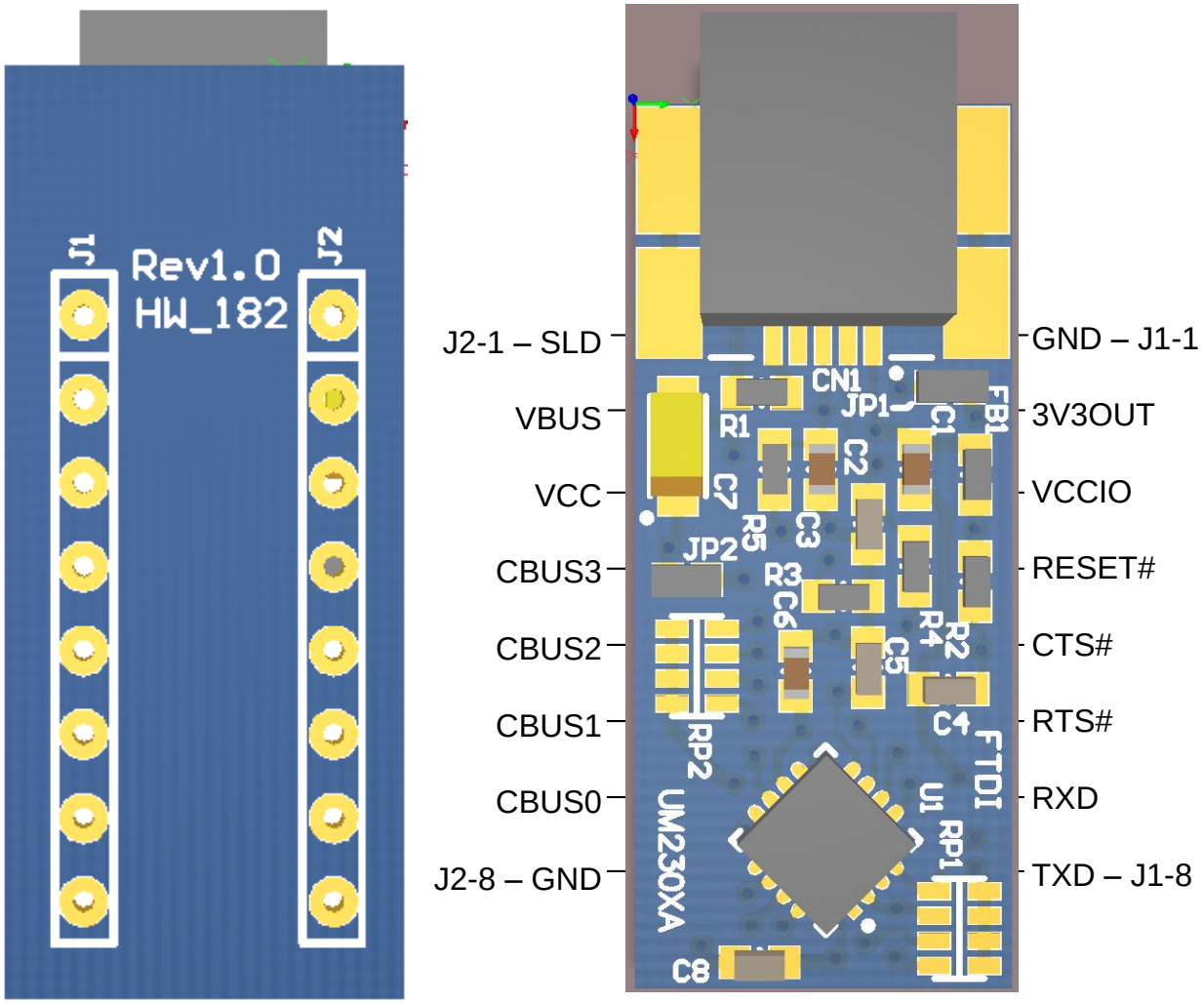

Figure 4.1 – Module Pin Out

Figure 4.1 illustrates the signals available on the DIL pins. The LHS shows the pinout when the module is viewed from the bottom. The RHS shows what signals are available (on the pins below) when viewed from the top. The pins do not go completely through the PCB.

Copyright © 2013 Future Technology Devices International Limited

4.2 Signal Descriptions

Pin No.	Name	Type	Description
J1-1, J2-8	GND	PWR	Module Ground Supply Pins
J1-2	3V3OUT	Power Input/ Output	3.3V output from integrated LDO regulator. This pin is decoupled with a 100nF capacitor to ground on the PCB module. The prime purpose of this pin is to provide the 3.3V supply that can be used internally. For power supply configuration details see section 5.
J1-3	VCCIO	Power Input	+1.8V to +3.3V supply to the UART Interface and CBUS I/O pins. For power supply configuration details see section 5.
J1-4	RESET#	Input	FT230X active low reset line. Configured with an on board pull-up and recommended filter capacitor.
J1-5	CTS#	Input	Clear To Send Control Input / Handshake Signal.
J1-6	RTS#	Output	Request to Send Control Output / Handshake Signal.
J1-7	RXD	Input	Receiving Asynchronous Data Input.
J1-8	TXD	Output	Transmit Asynchronous Data Output.
J2-1	SLD	GND	USB Cable Shield. Connected to GND via a 0ohm resistor.
J2-2	VBUS	Power Output	5V Power output from the USB bus. For a low power USB bus powered design, up to 100mA can be sourced from the 5V supply and applied to the USB bus. A maximum of 500mA can be sourced from the USB bus in a high power USB bus powered design. Currents up to 1A can be sourced from a dedicated charger and applied to the USB bus.
J2-3	VCC	Power Input	5V power input for FT230X. For power supply configuration details see section 5.
J2-4	CBUS3	I/O	Configurable CBUS I/O Pin. Function of this pin is configured in the device internal MTP ROM. . See CBUS Signal Options, Table 4.2.
J2-5	CBUS2	I/O	Configurable CBUS I/O Pin. Function of this pin is configured in the device internal MTP ROM.. See CBUS Signal Options, Table 4.2.
J2-6	CBUS1	I/O	Configurable CBUS I/O Pin. Function of this pin is configured in the device internal MTP ROM.. See CBUS Signal Options, Table 4.2.
J2-7	CBUS0	I/O	Configurable CBUS I/O Pin. Function of this pin is configured in the device internal MTP ROM. See CBUS Signal Options, Table 4.2.

Table 4.1 – Module Pin Out Description

Copyright © 2013 Future Technology Devices International Limited

4.3 CBUS Signal Options

The following options can be configured on the CBUS I/O pins. These options are all configured in the internal MTP ROM using the utility software FT_PROG, which can be downloaded from the www.ftdichip.com. The default configuration is described in Section 9.

CBUS Signal Option	Available On CBUS Pin	Description
Tristate	CBUS0-CBUS3	IO Pad is tristated
TXDEN	CBUS0-CBUS3	Enable transmit data for RS485
DRIVE_1	CBUS0-CBUS3	Output a constant 1
DRIVE_0	CBUS0-CBUS3	Output a constant 0
PWREN#	CBUS0-CBUS3	Output is low after the device has been configured by USB, then high during USB suspend mode. This output can be used to control power to external logic P-Channel logic level MOSFET switch. **NOTE:** This function is driven by an open-drain to ground with no internal pull-up, this is specially designed to aid battery charging applications. UMFT230XA connects an on-board 47K pull-up to each CBUS and DBUS pin.
TXLED#	CBUS0-CBUS3	Transmit data LED drive – open drain pulses low when transmitting data via USB.
RXLED#	CBUS0-CBUS3	Receive data LED drive – open drain pulses low when receiving data via USB.
TX&RXLED#	CBUS0-CBUS3	LED drive – open drain pulses low when transmitting or receiving data via USB.
SLEEP#	CBUS0-CBUS3	Goes low during USB suspend mode. Typically used to power down an external logic to RS232 level converter IC in USB to RS232 converter designs. Cancel SLEEP# option for when connected to a dedicated charger port, this can be selected when configuring the MTP ROM. When this option is enabled SLEEP# is driven high when FT230X is connected to a Dedicated Charger Port.
CLK24MHz	CBUS0-CBUS3	24 MHz Clock output.**
CLK12MHz	CBUS0-CBUS3	12 MHz Clock output.**
CLK6MHz	CBUS0-CBUS3	6 MHz Clock output.**
GPIO	CBUS0-CBUS3	CBUS bit bang mode option. Allows up to 4 of the CBUS pins to be used as general purpose I/O. Configured individually for CBUS0, CBUS1, CBUS2 and CBUS3 in the internal MTP ROM. A separate application note, AN232R-01, available from FTDI website (www.ftdichip.com) describes in more detail how to use CBUS bit bang mode.
BCD_Charger	CBUS0-CBUS3	Battery Charge Detect indicates when the device is connected to a dedicated battery charger host. Active high output. NOTE: Requires a 10K pull-down to remove power up toggling.
BCD_Charger#	CBUS0-CBUS3	Active low BCD Charger, driven by an open drain to ground with no internal pull-up (4.7K on board pull-up present).
BitBang_WR#	CBUS0-CBUS3	Synchronous and asynchronous bit bang mode WR# strobe output.
BitBang_RD#	CBUS0-CBUS3	Synchronous and asynchronous bit bang mode RD# strobe output.
VBUS Sense	CBUS0-CBUS3	Input to detect when VBUS is present.
Time Stamp	CBUS0-CBUS3	Toggle signal which changes state each time a USB SOF is received
Keep_Awake#	CBUS0-CBUS3	Active Low input, prevents the chip from going into suspend.

Table 4.2 – CBUS Signal Options

**When in USB suspend mode the outputs clocks are also suspended.

Copyright © 2013 Future Technology Devices International Limited

5 Module Configurations

5.1 Solder Link Configuration Options

Solder Link No.	Setting	Status	Description
JP1	Shorted	Default	Connects internal 3.3V regulator to VCCIO. This restricts signal drive to only 3.3V level signals.
JP1	Opened	Non-Default	Disconnects internal 3.3V regulator connection to VCCIO. This mode allows for the supply of 1.8V-3.3V power from an external power supply, thus allows the processing of signals with logic levels between 1.8V and 3.3V. VCCIO can be adjusted to match the interface requirements of external circuitry.

Table 5.1 – Solder Links JP1 Pin Description

Solder Link No.	Setting	Status	Description
JP2	Shorted	Default	Connects VBUS to VCC. This mode is known as "BUS-Powered" mode.
JP2	Opened	Non-Default	Disconnects VBUS to VCC. This allows the supply of power form an external power supply. This mode is known as "Self-Powered" mode.

Table 5.2 – Solder Links JP2 Pin Description

Note: There should never be more than one power output supplied to the same net. Failure to properly remove solder from JP1 and JP2 can cause a direct short between two different power supplies (when a self-powered set-up is applied and the USB bus is connected) resulting in damage to the UMFT230XA module and the target circuit.

5.2 Solder Link Modifications

The UMFT230XA has two solder links fixed to the top side of the PCB. These solder link can be adjusted by removing the solder linking the two PADs to produce an open or by placing a solder bridge to produce a short.

By default the UMFT230XA has both solder links shorting their pads. To allow for enhanced flexibility of this module remove both solder links and wire the header pins according to the power setup required.

Copyright © 2013 Future Technology Devices International Limited

5.3 Bus Power Configuration

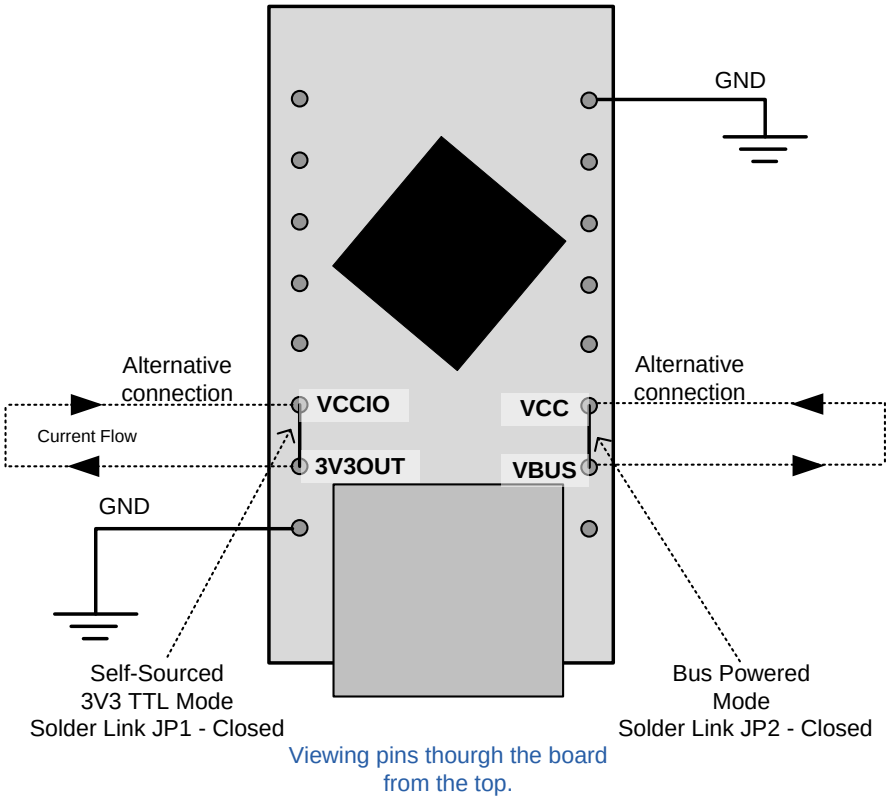

Figure 5.1 – Bus Powered Configuration

A bus powered configuration draws its power from the USB host/hub. The UMFT230XA is configured by default to be in bus powered mode.

Figure 5.1illustrates the UMFT230XA module in a typical USB bus powered design configuration. By default solder bridge connections link VCCIO to 3V3OUT, and VCC to VBUS. (Note that Figure 5.1 is for illustration only and that the pins do not actually go all the way through the PCB

For a bus power configuration power is supplied from the USB VBUS:

+5V VBUS power is sourced from the USB bus and is connected to the FT230X power input (VCC)

+3.3V power is sourced from the FT230X's voltage regulator output and is connected to the FT230X IO port's power input (VCCIO).

Interfacing the UMFT230XA module to a microcontroller (MCU), or other logic devices for bus powered configuration is done the same way as a self powered configuration (see Section 3), except that it is possible for the MCU or external device to take its power supply from the USB bus (either the 5V from the USB pin, or 3.3V from the 3V3OUT pin).

Copyright © 2013 Future Technology Devices International Limited

5.4 Self Powered Configuration

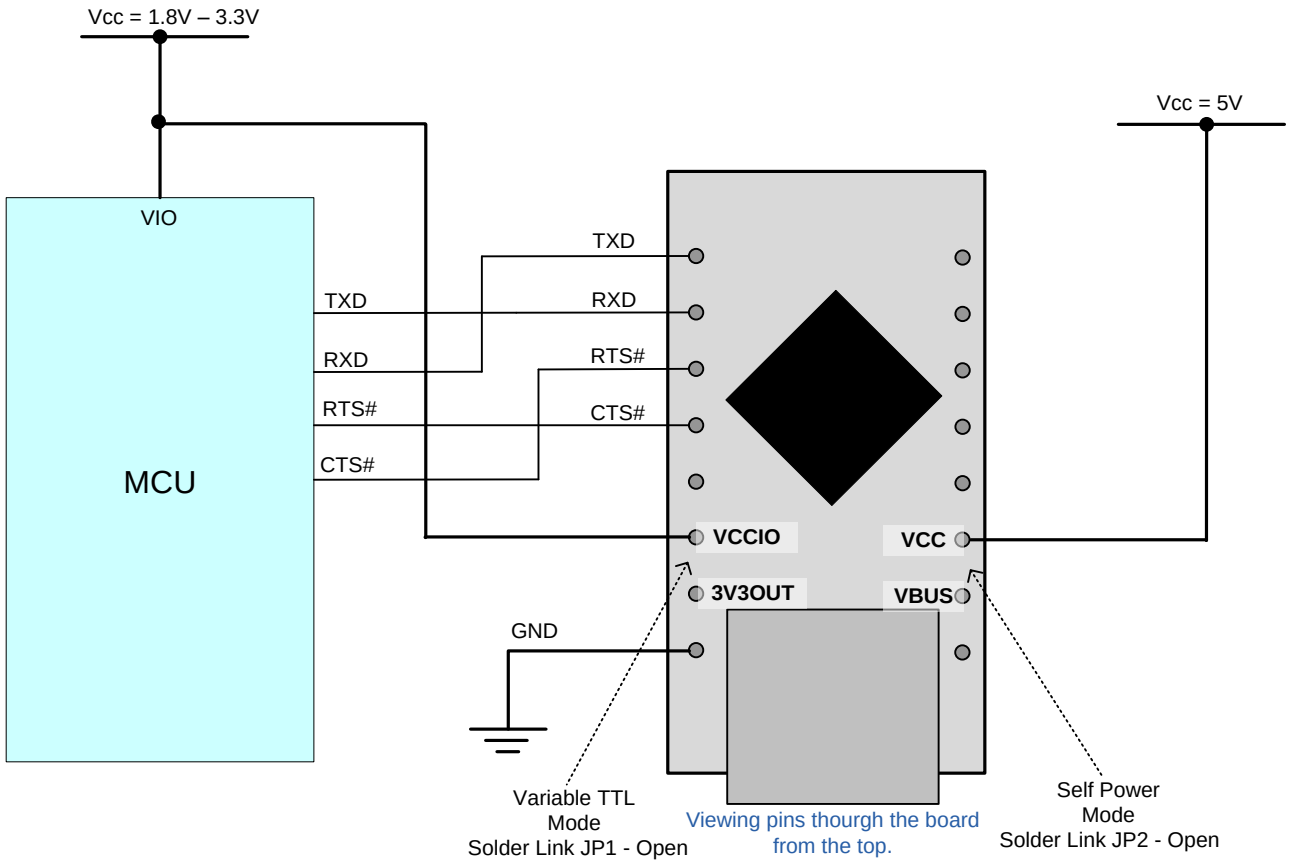

Figure 5.2 – Self-Powered Configuration

A self-powered configuration operates on the principle of drawing power from an external power supply, as oppose to drawing power from the USB host. In this configuration no current is drawn from the USB bus.

Figure 5.2 illustrates the UMFT230XA in a typical USB self-powered configuration. In this case the solder links connection of JP1 is removed, which allows 5V power to be supplied to the module VCC pins from an external source. VCCIO can to be powered from 3V3OUT or the VCC of an external source. (Note that Figure 5.2 is for illustration only and that the pins do not actually go all the way through the PCB)

For a self-powered configuration it is necessary to prevent current from flowing back to the USB data lines when the connected USB host or hub has powered down. To carry out this function the UMFT230XA uses an on-board voltage divider network connected to the USB power bus and RESET# pin. This operates on the principle that when no power is supplied to the VBUS line, the FT230X will automatically be held in reset by a weak pull-down, when power is applied the voltage divider will apply a weak 3.3V pull-up. Driving a level to the RESET# pin of the UMFT230XA will override the effect of this voltage divider. When the FT230X is in reset the USB DP signal pull-up resistor connected to the data lines is disconnected and no current can flow down the USB lines.

An example of interfacing the FT230X with a Microcontroller's UART interface is also illustrated in Figure 5.2. This example shows the wire configuration of the transfer and handshake lines. This example also illustrates that a voltage other than 3.3V can be supplied to the FT230X's IO port, this feature is described further and for bus powered mode in Section 5.6.

Alternatively both the FT230X's IO port and MCU can be powered from the 3V3OUT pin; this approach is described in Section 5.5.

Copyright © 2013 Future Technology Devices International Limited

5.5 USB Bus Powered with Power Switching Configuration

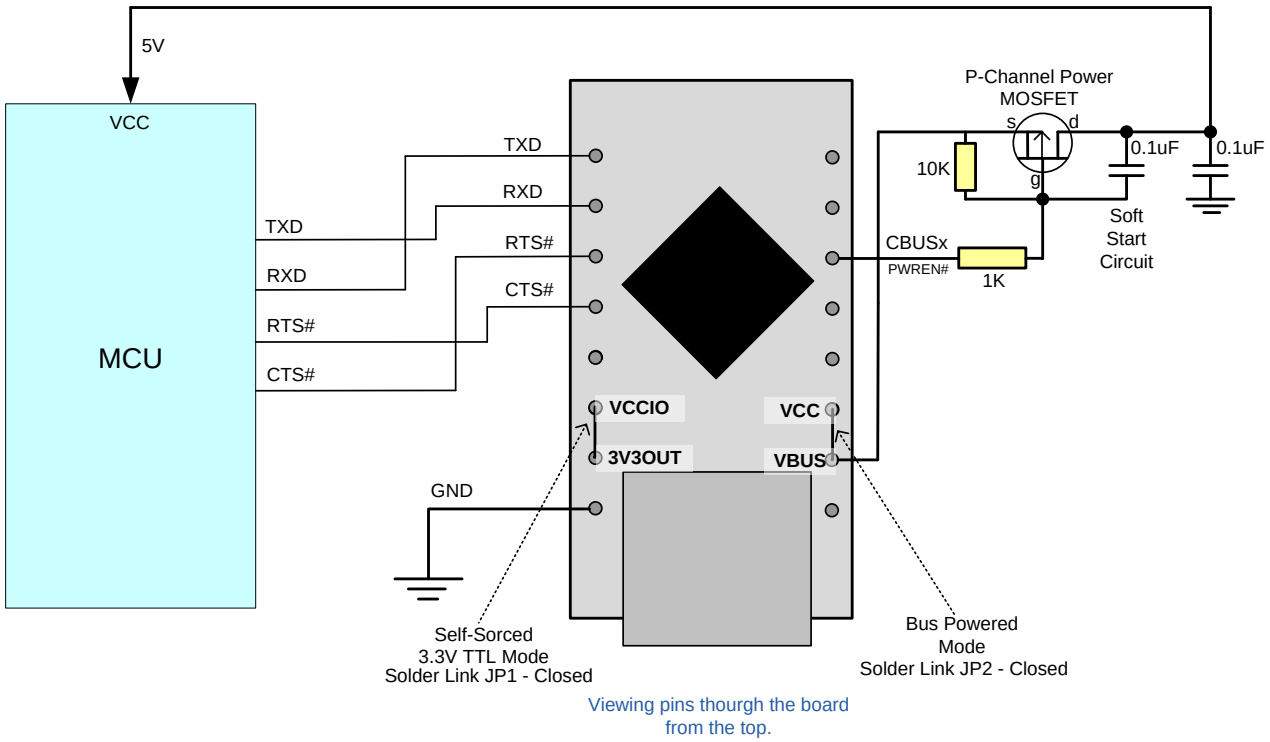

Figure 5.3 – Bus Powered with Power Switching Configuration

USB bus powered mode is introduced in Section 5.3. This section describes how to use this mode with a power switch.

USB bus powered circuits are required by USB compliance standards to consume less than 2.5mA (and less than 100mA when not enumerated and not suspended) when connected to a host or hub when in USB suspend mode. The PWREN# CBUS function can be used to remove power from external circuitry whenever the FT230X is not enumerated. (Note: It is impossible to be in suspended mode when enumerated.) (Note that Figure 5.3 is for illustration only and that the pins do not actually go all the way through the PCB)

To implement a power switch using PWREN#, configure a P-Channel Power MOSFET to have a soft start by fitting a 10K pull-up, a 1K series resistor and a 100nF cap as shown in Figure 5.3. The time constant

Connecting the source of the P-Channel MOSFET to 3V3OUT instead of VBUS can allow external logic to source 3.3V power from the FT230X without breaking USB compliancy. In this setup it is important that the VCCIO is not sourced from the drain of this MOSFET, this is because the power used to drive the gate of this transistor is sourced from VCCIO. VCCIO should be connected directly to 3V3OUT for this setup to function effectively. It is also important that the external logic must and IO core of the FT230X must not draw more that 50mA, this is because the current limit of the internal 3.3V regulator is 50mA.

Copyright © 2013 Future Technology Devices International Limited

5.6 Variable IO Voltage Supply

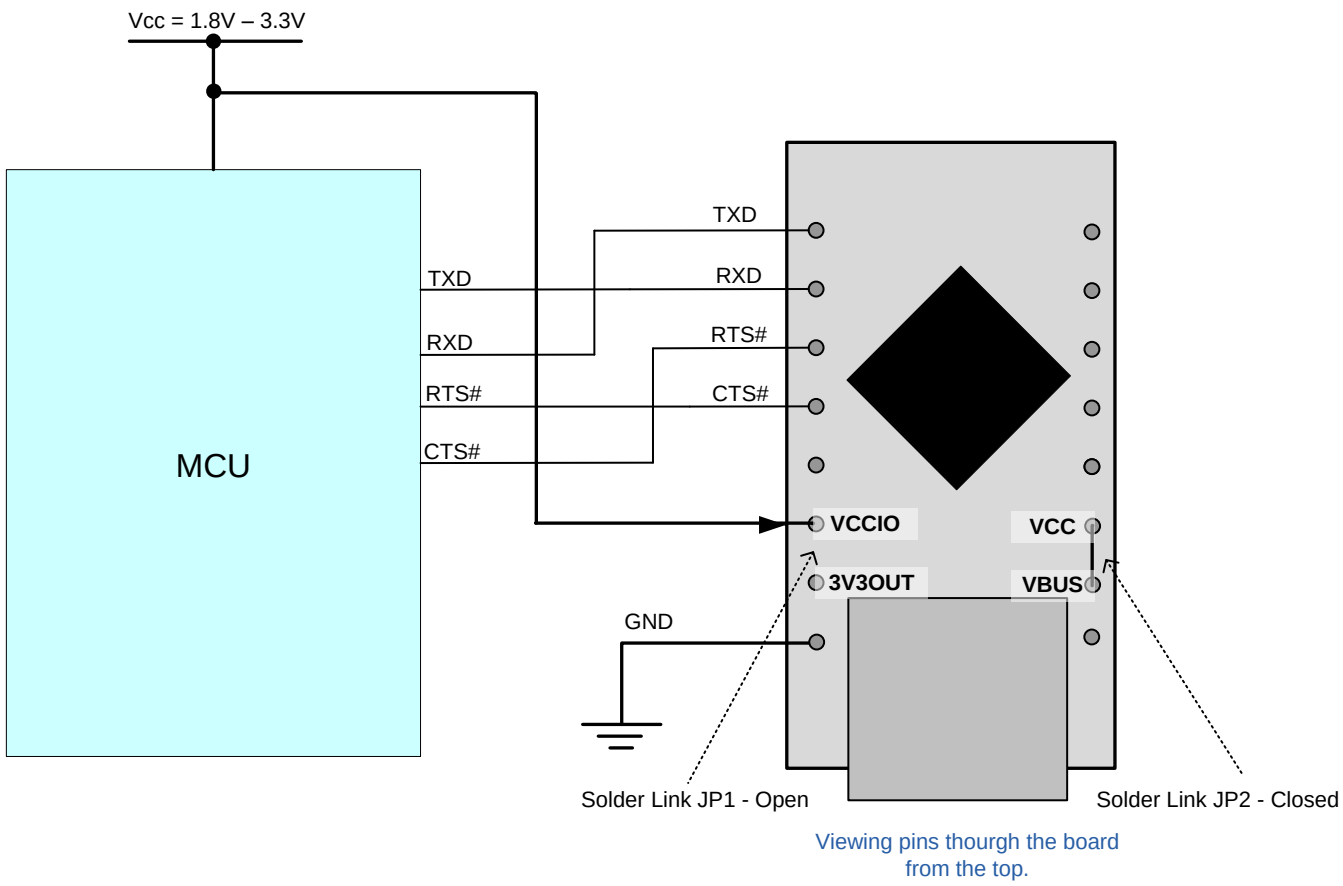

Figure 5.4 – USB Bus Powered 3.3V Logic Drive

The FT230X can process signals at CMOS/TTL logic levels in the range of 1.8V to 3.3V. This section describes how to utilise this feature.

Figure 5.4 shows a configuration where the FT230X is interfaced to a device with IOs operating in the range of 1.8V – 3.3V. The IO ports of this module need to be powered with a voltage level that is equal to the level of the signals it is processing. Since the FT230X's embedded voltage regulator only outputs 3V3 the IO ports will need to be powered from another power source when operating at voltage levels other than 3.3V. (Note that Figure 5.4 is for illustration only and that the pins do not actually go all the way through the PCB)

By default, a short is present between 3V3OUT (embedded voltage regulator) and VCCIO (IO port's power input) by solder links JP1. If an external power supply is used to power the IO ports this solder links needs to be open. This can be done by removing the solder linking the two pads of the solder links.

The configuration described in this section can be implemented in either bus-powered mode or self-powered mode.

Note 1: The CBUS and DBUS pins are 5V tolerant; however these signals cannot drive signals at 5V TTL/CMOS. VCCIO is not 5V tolerant; applying 5V to VCCIO will damage the chip.

Note 2: If power is applied to VCCIO and no power is applied to VCC all Ios will be at an unknown state, this however will not damage the chip. The FT230X also has protective circuitry to prevent the chip being damaged by a voltage discrepancy between VCCIO and the level of the signal being processed.

Note 3: When using VCCIO less than 3V3 on a chip from FTDI's X-chip range, it is recommended to uses pull up resistors (47K) to VCCIO on the data lines, all of the UMFT2xxXA devices include an on-board pull-up for these lines.

Copyright © 2013 Future Technology Devices International Limited

5.7 3.3V Voltage Supply

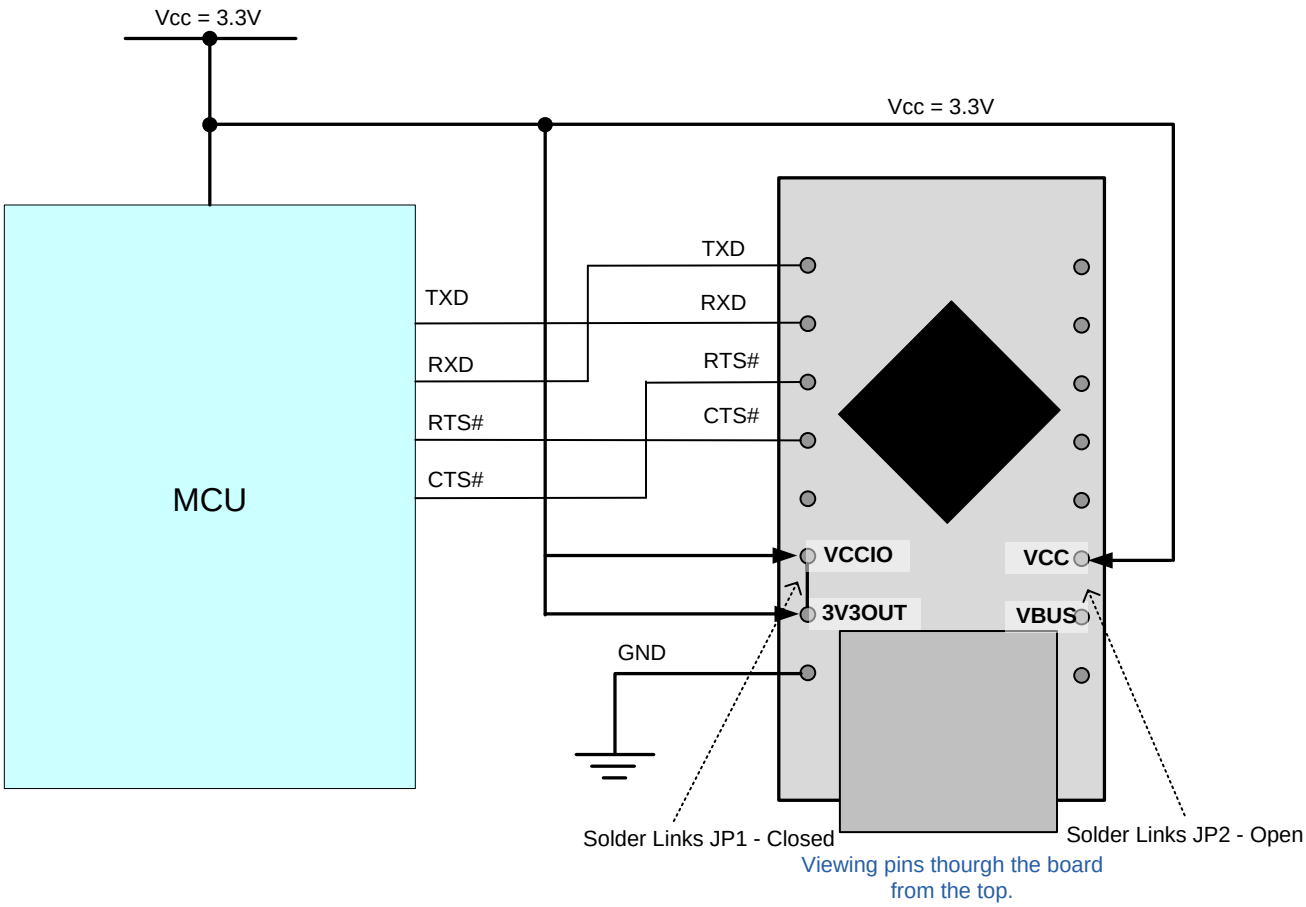

Figure 5.5 – USB Self Powered 3.3V Logic Drive

The FT230X can be powered from a single 3.3V supply. This feature is an alternative to having the FT230X powered at 5V in standard self-powered configuration.

The 3.3V Self Powered configuration is illustrated in Figure 5.5. Note that the 3.3V input is connected to VCC, VCCIO and 3V3OUT. (Note that Figure 5.5 is for illustration only and that the pins do not actually go all the way through the PCB)

5.8 Configuring the MTP ROM

The FT230X contains an embedded MTP ROM. This can be used to configure the functions of each CBUS pins, the current drive on each signal pin, current limit for the USB bus and the other descriptors of the device. For details on using the MTP ROM/EEPROM programming utility FT_PROG, please see the FT_PROG User Guide and the FT230X datasheet.

When programming the MTP ROM please note:

i) One of the CBUS Pins can be configured as PWREN# in the internal MTP ROM. This can be used to switch the power supply to the external circuitry.

ii) The Max Bus Power setting of the MTP ROM should specify the maximum current to be drawn from the USB host/hub when enumerated. For high-powered USB devices the current limit when enumerated is between 100mA and 500mA, for low-powered USB devices the current limit is 100mA.

Copyright © 2013 Future Technology Devices International Limited

6 Module Dimensions

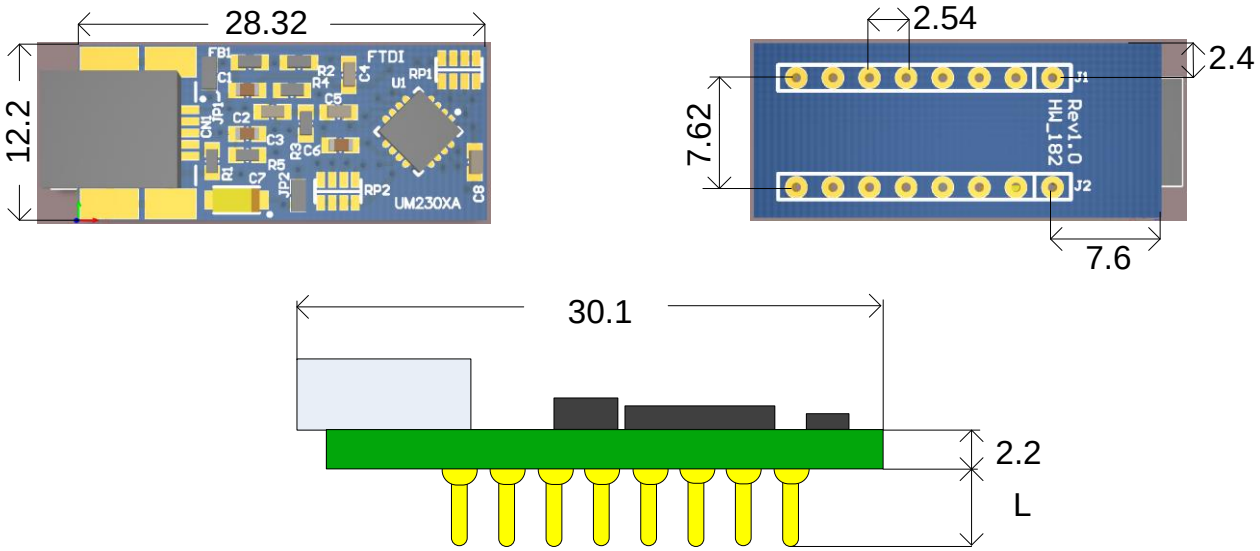

-01 L = 5.6mm -02 L = 4.6mm

Figure 6.1 – UMFT230XA Module Dimensions

All dimensions are given in millimetres.

The UMFT230XA module exclusively uses lead free components, and is fully compliant with European Union directive 2002/95/EC.

7 IC Package Markings

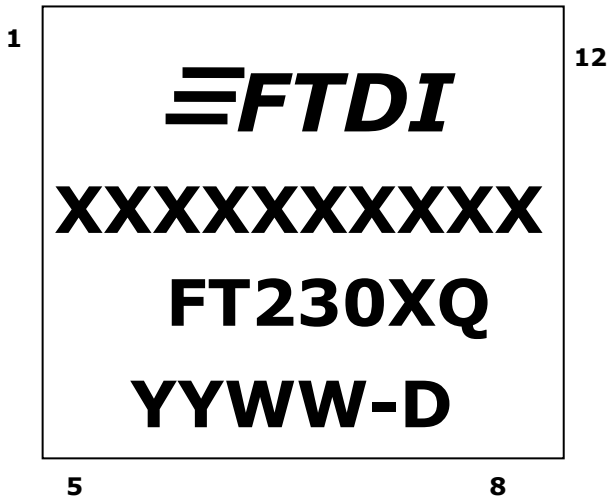

The date code format is **YYXX** where XX = 2 digit week number, YY = 2 digit year number. This is followed by the revision letter.

The code **XXXXXXX** is the manufacturing LOT code.

Copyright © 2013 Future Technology Devices International Limited

8 UMFT230XA Module Circuit Schematic

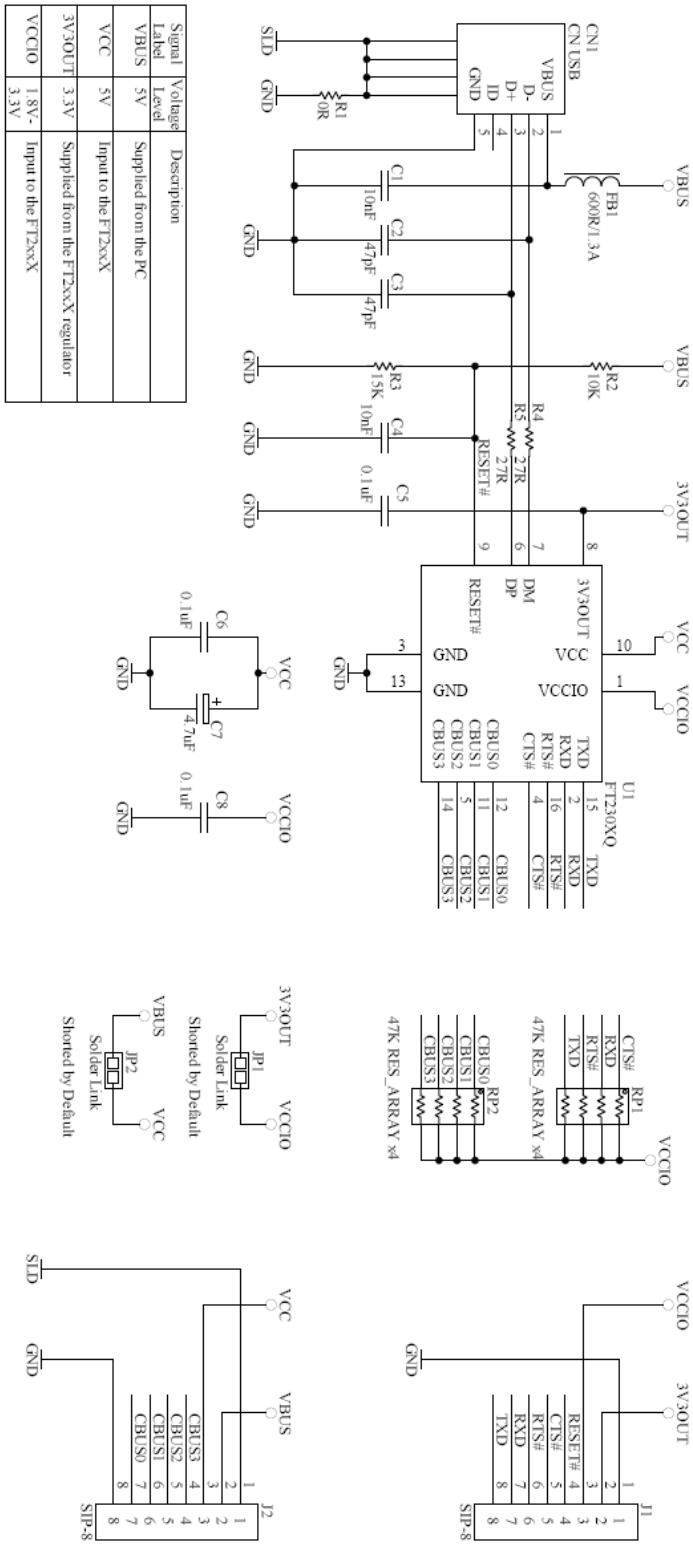

Figure 8.1 – Module Circuit Schematic

Copyright © 2013 Future Technology Devices International Limited

9 Internal MTPROM Configuration

Following a power-on reset or a USB reset the FT230X will scan its internal MTP ROM and read the USB configuration descriptors stored there. The default values programmed into the internal MTP ROM in the FT230XQ used on the UMFT230XA are shown in Table 8.1.

Parameter	Value	Notes
USB Vendor ID (VID)	0403h	FTDI default VID (hex)
USB Product UD (PID)	6015h	FTDI default PID (hex)
Serial Number Enabled?	Yes	
Serial Number	See Note	A unique serial number is generated and programmed into the ,TP ROM during final test of the module.
Pull down I/O Pins in USB Suspend	Disabled	Enabling this option will make the device pull down on the UART interface lines when the power is shut off (PWREN# is high).
Manufacturer Name	FTDI	
Product Description	UMFT230XA	
Max Bus Power Current	90mA	
Power Source	Bus Powered	
Device Type	FT230X	
USB Version	0200	Returns USB 2.0 device description to the host. Note: The device is a USB 2.0 Full Speed device (12Mb/s) as opposed to a USB 2.0 High Speed device (480Mb/s).
Remote Wake Up	Enabled	Taking RI# low will wake up the USB host controller from suspend.
High Current I/Os	Disabled	Enables the high drive level on the UART and CBUS I/O pins.
Load VCP Driver	Enabled	Makes the device load the CVP driver interface for the device.
CBUS0	GPIO	
CBUS1	GPIO	
CBUS2	GPIO	
CBUS3	GPIO	
Invert UART	Disabled	Signal on this pin becomes TXD# if enable.

Table 9.1 – Default Internal MTP ROM Configuration

The internal MTP ROM in the FT230X can be programmed over USB using the utility program FT_PROG. FT_PROG can be downloaded from the www.ftdichip.com. Users who do not have their own USB vendor ID but who would like to use a unique Product ID in their design can apply to FTDI for a free block of unique PIDs. Contact FTDI Support (support1@ftdichip.com) for this service, also see TN_100 and TN_101.

Copyright © 2013 Future Technology Devices International Limited

10 Contact Information

Head Office – Glasgow, UK

Unit 1, 2 Seaward Place, Centurion Business Park
Glasgow G41 1HH
United Kingdom
Tel: +44 (0) 141 429 2777
Fax: +44 (0) 141 429 2758

E-mail (Sales) sales1@ftdichip.com
E-mail (Support) support1@ftdichip.com
E-mail (General Enquiries) admin1@ftdichip.com

Branch Office – Hillsboro, Oregon, USA

7130 SW Fir Loop
Tigard, OR 97223
USA
Tel: +1 (503) 547 0988
Fax: +1 (503) 547 0987

E-Mail (Sales) us.sales@ftdichip.com
E-Mail (Support) us.support@ftdichip.com
E-Mail (General Enquiries) us.admin@ftdichip.com

Branch Office – Taipei, Taiwan

2F, No. 516, Sec. 1, NeiHu Road
Taipei 114
Taiwan , R.O.C.
Tel: +886 (0) 2 8797 1330
Fax: +886 (0) 2 8751 9737

E-mail (Sales) tw.sales1@ftdichip.com
E-mail (Support) tw.support1@ftdichip.com
E-mail (General Enquiries) tw.admin1@ftdichip.com

Branch Office – Shanghai, China

Room 1103, No. 666 West Huaihai Road,
Shanghai, 200052
China
Tel: +86 (0)21 6235 1596
Fax: +86 (0)21 6235 1595

E-mail (Sales) cn.sales@ftdichip.com
E-mail (Support) cn.support@ftdichip.com
E-mail (General Enquiries) cn.admin@ftdichip.com

Web Site

http://ftdichip.com

Distributor and Sales Representatives

Please visit the Sales Network page of the FTDI Web site for the contact details of our distributor(s) and sales representative(s) in your country.

System and equipment manufacturers and designers are responsible to ensure that their systems, and any Future Technology Devices International Ltd (FTDI) devices incorporated in their systems, meet all applicable safety, regulatory and system-level performance requirements. All application-related information in this document (including application descriptions, suggested FTDI devices and other materials) is provided for reference only. While FTDI has taken care to assure it is accurate, this information is subject to customer confirmation, and FTDI disclaims all liability for system designs and for any applications assistance provided by FTDI. Use of FTDI devices in life support and/or safety applications is entirely at the user's risk, and the user agrees to defend, indemnify and hold harmless FTDI from any and all damages, claims, suits or expense resulting from such use. This document is subject to change without notice. No freedom to use patents or other intellectual property rights is implied by the publication of this document. Neither the whole nor any part of the information contained in, or the product described in this document, may be adapted or reproduced in any material or electronic form without the prior written consent of the copyright holder. Future Technology Devices International Ltd, Unit 1, 2 Seaward Place, Centurion Business Park, Glasgow G41 1HH, United Kingdom. Scotland Registered Company Number: SC136640

Copyright © 2013 Future Technology Devices International Limited

Appendix A – List of Figures and Tables

List of Figures

Figure 4.1 – Module Pin Out 4
Figure 5.1 – Bus Powered Configuration 8
Figure 5.2 – Self-Powered Configuration 9
Figure 5.3 – Bus Powered with Power Switching Configuration 10
Figure 5.4 – USB Bus Powered 3.3V Logic Drive 11
Figure 5.5 – USB Self Powered 3.3V Logic Drive 12
Figure 6.1 – UMFT230XA Module Dimensions 13
Figure 8.1 – Module Circuit Schematic 14

List of Tables

Table 4.1 – Module Pin Out Description 5
Table 4.2 – CBUS Signal Options 6
Table 5.1 – Solder Links JP1 Pin Description 7
Table 5.2 – Solder Links JP2 Pin Description 7
Table 9.1 – Default Internal MTP ROM Configuration 15

Copyright © 2013 Future Technology Devices International Limited

Appendix B – Revision History

Document Title:	UMFT230XA
Document Reference No.:	FT_000519
Clearance No.:	FTDI# 269
Product Page:	http://www.ftdichip.com/FT-X.htm
Document Feedback:	Send Feedback

Version 1.0	Initial Datasheet Created	09/02/12
Version 1.1	Added links, referances to silicon revision, TID and logos.	13/06/12
Version 1.2	Added a section for package marking and changed TIDs.	29/01/13
Version 1.3	Added -02 details.	08/11/13

Copyright © 2013 Future Technology Devices International Limited

Общество с ограниченной ответственностью «МосЧип» ИНН 7719860671 / КПП 771901001
Адрес: 105318, г.Москва, ул.Щербаковская д.3, офис 1107

Данный компонент на территории Российской Федерации

Вы можете приобрести в компании MosChip.

Для оперативного оформления запроса Вам необходимо перейти по данной ссылке:

http://moschip.ru/get-element

Вы можете разместить у нас заказ для любого Вашего проекта, будь то серийное производство или разработка единичного прибора.

В нашем ассортименте представлены ведущие мировые производители активных и пассивных электронных компонентов.

Нашей специализацией является поставка электронной компонентной базы двойного назначения, продукции таких производителей как XILINX, Intel (ex.ALTERA), Vicor, Microchip, Texas Instruments, Analog Devices, Mini-Circuits, Amphenol, Glenair.

Сотрудничество с глобальными дистрибьюторами электронных компонентов, предоставляет возможность заказывать и получать с международных складов практически любой перечень компонентов в оптимальные для Вас сроки.

На всех этапах разработки и производства наши партнеры могут получить квалифицированную поддержку опытных инженеров.

Система менеджмента качества компании отвечает требованиям в соответствии с ГОСТ Р ИСО 9001, ГОСТ РВ 0015-002 и ЭС РД 009

Офис по работе с юридическими лицами:

105318, г.Москва, ул.Щербаковская д.3, офис 1107, 1118, ДЦ «Щербаковский»

Телефон: +7 495 668-12-70 (многоканальный)

Факс: +7 495 668-12-70 (доб.304)

E-mail: info@moschip.ru

Skype отдела продаж:
moschip.ru
moschip.ru_4
moschip.ru_6
moschip.ru_9