| REV | DESCRIPTION | DATE | APPROVED |
|---|---|---|---|
| A | ENGINEERING RELEASE. | 10/15/03 | MC |
| B | Updated TO-21 ID | 09/05/06 | MC |
| C | Updated Part Thicknesses Offered | 09/08/10 | TY |
| D | Corrected TO-13 O.D. Typo. Should be .310 | 07/03/12 | TY |

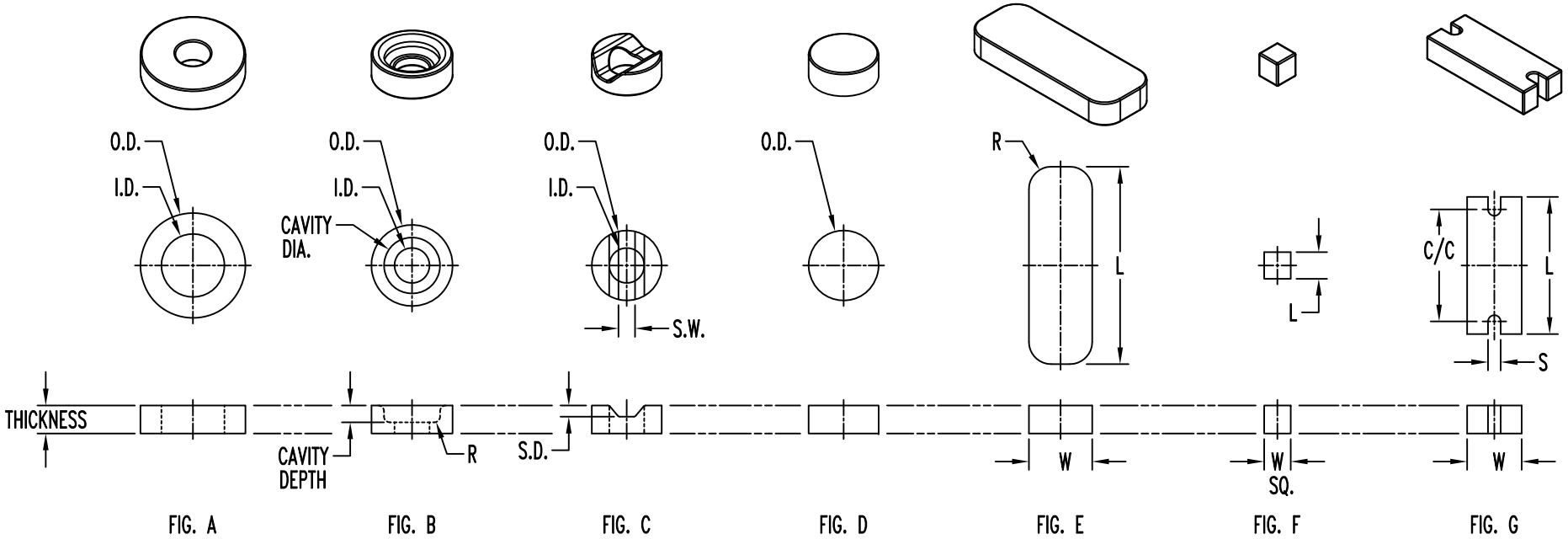


EXAMPLE:

TO-200-100E

- Suffix I.D. (see Table 1)
- Part Thickness
- TO Style
- Series

Table 1

| SUFFIX I.D. | I.D. DESCRIPTION |
|---|---|
| NONE | Wax |
| E | Effervescent |
| CR | Color Removed |
| DR | Detergent Removed |
| H | Salt |
| XH | Extra Hard |

UNLESS OTHERWISE SPECIFIED: DIMENSIONS ARE IN INCHES

TOLERANCES

| DECIMALS | | ANGULAR | |
|---|---|---|---|
| .X | ± .1 | X° | ± 1° |
| .XX | ± .01 | | |
| .XXX | ± .005 | | |

DESIGNER: DAVID GREEN — DATE: 10/15/03

CHECKER: M CHEN — DATE: 10/15/03


Bivar®
4 THOMAS, IRVINE, CA.92618
TEL: (949) 951-8808 FAX: (949) 951-3974


PART NAME: DISS-O-PADS, WASH-AWAY COMPONENTS & GENERAL PURPOSE SPACERS

| SIZE | DWG NAME | DWG NO. | REV |
|---|---|---|---|
| A | | TO-XXX-XXX | D |

SCALE 1=1 | CAGE CODE 32559 | SHEET 1 OF 3

| REV | DESCRIPTION | DATE | APPROVED |
|---|---|---|---|
| | SEE SHEET #1. | | |
| | | | |

TO-5

| PART NO. | I.D. | O.D. | THICKNESS | FIG. | TO-5 |
|---|---|---|---|---|---|
| TO-5 | .225 (5.7mm) | .375 (9.5mm) | .030, .040, .050, .060, .070, .085, .090, .100, .120, .130, .150, .170, .200, .230, .300 | A | Spacer |
| TO-6 | .250 (6.4mm) | .375 (9.5mm) | .030, .040, .050, .060, .070, .090, .100, .120, .130, .150, .160, .180, .190 | A | I.C. Spacer |
| TO-9 | .300 (7.8mm) | .437 (11.1mm) | .030, .040, .050, .070, .080, .090, .100, .120, .130, .150, .180, .200, .300 | A | .300 (7.6mm) L.S. |
| TO-13 | .225 (5.7mm) | .310 (7.9mm) | .030, .040, .050, .060, .070, .080, .090, .100, .120, .130, .150 | A | Epoxy Case |

TO-18

| PART NO. | I.D. | O.D. | CAVITY DIA. | CAVITY DEPTH | THICKNESS | FIG. | TO-18 |
|---|---|---|---|---|---|---|---|
| TO-12 | .125 (3.2mm) | .310 (7.9mm) | .215 (5.5mm) | .065 (1.7mm) | .080, .090, .100, .120, .130, .180 | B | .250 (6.4mm) L.S. |
| TO-16 | .125 (3.2mm) | .205 (5.2mm) | – | – | .030, .040, .045, .050, .060, .070, .080, .090, .100, .120, .130, .150, .175, .200 | A | Epoxy Case |
| TO-17 | .170 (4.3mm) | .250 (6.4mm) | – | – | .030, .035, .040, .050, .060, .070, .090, .100, .120, .130, .140, .150, .170, .180, .200 | A | Thin Walls |
| TO-18 | .125 (3.2mm) | .250 (6.4mm) | – | – | .030, .040, .045, .050, .055, .060, .070, .080, .090, .100, .120, .125, .130, .150, .170, .190, .200, .250 | A | Standard |
| TO-20 | .125 (3.2mm) | .290 (7.4mm) | .200 (5.1mm) | .065 (1.7mm) | .070, .090, .100, .120, .130, .150 | B | .200 (5.1mm) L.S. |
| TO-27 | .125 (3.2mm) | .290 (7.4mm) | – | – | .030, .040, .050, .060, .070, .090, .100, .120, .130 | A | Heavy Walls |

AXIAL

| PART NO. | I.D. | O.D. | THICKNESS | SLOT DEPTH | SLOT WIDTH | FIG. |
|---|---|---|---|---|---|---|
| TO-21 | .125 (3.2mm) | .250 (6.4mm) | .050, .070, .080, .090, .100, .120, .130, .150, .170, .200, .230, .250 | .045 (1.1mm) | .060 (1.5mm) | C |
| TO-35 | – | .440 (11.2mm) | .100, .120, .130, .140, .150, .170, .180, .190, .220, .230, .250 | .065 (1.7mm) | .230 (5.8mm) | C |
| TO-36 | – | .187 (4.7mm) | .050, .060, .070, .080, .090, .100, .120, .130, .150 | .040 (1.0mm) | .080 (2.0mm) | C |
| TO-37 | – | .156 (4.0mm) | .050, .070, .080, .090, .100, .120 | .025 (.64mm) | .050 (1.3mm) | C |

ON-END/CORDWOOD

| PART NO. | I.D. | O.D. | CAVITY DIA. | CAVITY DEPTH | THICKNESS | FIG. |
|---|---|---|---|---|---|---|
| TO-7 | .075 (1.9mm) | .175 (4.4mm) | – | – | .030, .040, .050, .060, .070, .090, .100, .120, .130, .150, .180, .210 | A |
| TO-8 | .062 (1.6mm) | .156 (4.0mm) | – | – | .030, .035, .040, .050, .055, .060, .065, .070, .080, .085, .090, .100, .105, .120, .130, .150, .160, .190, .200, .210 | A |
| TO-10 | .040 (1.0mm) | .085 (2.2mm) | – | – | .025, .030, .040, .050, .060, .065, .070, .080, .090, .100 | A |
| TO-11 | .045 (1.1mm) | .100 (2.5mm) | – | – | .030, .040, .050, .060, .070, .080, .100, .110, .120 | A |
| TO-26 | .070 (1.8mm) | .187 (4.7mm) | – | – | .030, .040, .050, .060, .070, .090, .100, .120, .125, .150 | A |
| TO-40 | .045 (1.1mm) | .156 (4.0mm) | – | – | .030, .040, .050, .060, .070, .080, .090, .100, .120, .130, .150, .160 | A |
| TO-64 | .045 (1.1mm) | .140 (3.6mm) | – | – | .030, .035, .040, .050, .060, .070, .090, .100, .120, .125, .130, .140, .150, .160, .175 | A |
| TO-65 | .075 (1.9mm) | .140 (3.6mm) | – | – | .030, .040, .045, .050, .060, .070, .080, .090, .100, .120, .125, .130, .150, .175 | A |
| TO-67 | .045 (1.1mm) | .140 (3.6mm) | .090 (2.3mm) | .025 (.64mm) | .050, .055, .060, .070, .090, .100, .120, .130 | B |
| TO-68 | .045 (1.1mm) | .110 (2.8mm) | .075 (1.9mm) | .025 (.64mm) | .040, .050, .055, .060, .070, .090, .100, .120, .130, .150, .160 | B |

SOLID

| PART NO. | I.D. | O.D. | THICKNESS | FIG. |
|---|---|---|---|---|
| TO-29 | – | .156 (4.0mm) | .040, .050, .060, .070, .090, .100, .120, .130 | D |
| TO-31 | – | .125 (3.2mm) | .040, .050, .060, .070, .090, .100, .120, .130 | D |
| TO-32 | – | .187 (4.7mm) | .030, .040, .050, .060, .070, .080, .090, .100, .120, .130 | D |
| TO-33 | – | .250 (6.4mm) | .030, .040, .050, .060, .070, .080, .090, .100, .120, .130 | D |
| TO-34 | – | .375 (9.5mm) | .040, .050, .060, .070, .090, .100, .120, .130, .250 | D |

UNLESS OTHERWISE SPECIFIED:
DIMENSIONS ARE IN INCHES

TOLERANCES

| DECIMALS | | ANGULAR | |
|---|---|---|---|
| .X | ± .1 | X° | ± 1° |
| .XX | ± .01 | | |
| .XXX | ± .005 | | |

Bivar®
4 THOMAS, IRVINE, CA.92618
TEL: (949) 951-8808 FAX: (949) 951-3974

PART NAME: DISS-O-PADS,
WASH-AWAY COMPONENTS & GENERAL PURPOSE SPACERS

| DESIGNER | DATE | SIZE | DWG NAME | DWG NO. | REV |
|---|---|---|---|---|---|
| DAVID GREEN | 10/15/03 | A | | TO-XXX-XXX | D |
| CHECKER M CHEN | DATE 10/15/03 | SCALE 1=1 | CAGE CODE 32559 | SHEET 2 OF 3 | |

| REV | DESCRIPTION | DATE | APPROVED |
|---|---|---|---|
| | SEE SHEET #1. | | |
| | | | |

GENERAL PURPOSE

| PART NO. | I.D. | O.D. | THICKNESS | FIG. |
|---|---|---|---|---|
| TO-46 | .090 (2.3mm) | .250 (6.4mm) | .030, .040, .050, .060, .070, .090, .100, .120, .130, .150, .200, .240 | A |
| TO-19 | .250 (6.4mm) | .480 (12.2mm) | .030, .040, .050, .060, .070, .090, .100, .120, .130, .150, .190, .200, .230, .250 | A |
| TO-22 | .225 (5.7mm) | .437 (11.1mm) | .030, .040, .050, .060, .070, .080, .090, .100, .110, .120, .130, .150, .190, .200, .250 | A |
| TO-23 | .090 (2.3mm) | .310 (7.9mm) | .030, .040, .050, .055, .060, .070, .090, .100, .120, .130, .150, .180, .190, .200, .250 | A |
| TO-24 | .090 (2.3mm) | .340 (8.6mm) | .030, .040, .050, .060, .070, .090, .100, .120, .130, .150 | A |
| TO-30 | .275 (7.0mm) | .397 (10.0mm) | .030, .040, .050, .060, .070, .090, .100, .120, .130, .150 | A |
| TO-25 | .180 (4.6mm) | .480 (12.2mm) | .030, .040, .050, .060, .070, .090, .100, .120, .130, .150, .250 | A |
| TO-28 | .172 (4.4mm) | .343 (8.7mm) | .030, .040, .050, .060, .070, .090, .100, .120, .130, .180, .190 | A |
| TO-41 | .156 (4.0mm) | .360 (9.1mm) | .030, .040, .050, .060, .070, .090, .100, .120, .130, .140 | A |
| TO-42 | .250 (6.4mm) | .438 (11.1mm) | .030, .040, .050, .060, .070, .090, .100, .120, .130 | A |

RECTANGULAR & SQUARE

| PART NO. | L | W | R | THICKNESS | FIG. | |
|---|---|---|---|---|---|---|
| TO-100 | .670 (17.0mm) | .100 (2.5mm) | .031 (.79mm) | .030, .035, .040, .045, .050, .060, .065, .070, .075, .080, .090, .100, .120, .130, .150, .200 | E | Rectangular |
| TO-101 | .562 (14.3mm) | .185 (4.7mm) | – | .030, .040, .050, .060, .070, .080, .090, .100, .120, .130, .150, .160, .220 | E | Rectangular |
| TO-102 | .505 (12.8mm) | .160 (4.1mm) | – | .040, .050, .060, .070, .090, .100, .120, .130, .150 | E | Rectangular |
| TO-116 | .666 (16.9mm) | .300 (7.8mm) | .063 (1.6mm) | .030, .040, .050, .055, .060, .065, .070, .075, .080, .090, .100, .110, .120, .125, .130, .150, .180, .200 | E | Rectangular |
| TO-117 | .666 (16.9mm) | .281 (7.1mm) | .100 (2.54mm) | .030, .040, .050, .060, .070, .080, .090, .100, .120, .125, .130, .140, .150, .160 | E | Rectangular |
| TO-118 | .705 (17.9mm) | .260 (6.6mm) | .080 (2.0mm) | .030, .040, .050, .060, .070, .080, .090, .100, .110, .120, .130, .150, .160, .170, .175, .200 | E | Rectangular |
| TO-120 | .085 (2.2mm) | .085 (2.2mm) | – | .030, .035, .040, .045, .050, .060, .070, .090, .100, .120 | F | Square |
| TO-121 | .095 (2.4mm) | .095 (2.4mm) | – | .030, .035, .040, .045, .050, .060, .070, .075, .085, .090, .095, .100, .120 | F | Square |

RADIAL & AXIAL DEVICE

| PART NO. | C/C | S | W | L | THICKNESS | FIG. |
|---|---|---|---|---|---|---|
| TO-200 | .100 (2.5mm) | .035 (.89mm) | .095 (2.4mm) | .190 (4.8mm) | .030, .035, .040, .050, .060, .070, .080, .090, .100, .120, .130, .150 | G |
| TO-201 | .150 (3.8mm) | .035 (.89mm) | .095 (2.4mm) | .240 (6.1mm) | .030, .040, .050, .060, .070, .090, .100, .120, .130, .150 | G |
| TO-203 | .200 (5.1mm) | .035 (.89mm) | .095 (2.4mm) | .290 (7.4mm) | .030, .040, .050, .060, .070, .090, .100, .120, .130, .140, .150, .200 | G |
| TO-204 | .250 (6.4mm) | .040 (1.0mm) | .145 (3.7mm) | .340 (8.6mm) | .040, .050, .060, .070, .080, .090, .100, .120, .130, .150 | G |
| TO-205 | .300 (7.8mm) | .040 (1.0mm) | .145 (3.7mm) | .390 (9.9mm) | .040, .050, .060, .070, .090, .100, .120, .130, .150, .215 | G |
| TO-206 | .400 (10.2mm) | .045 (1.1mm) | .195 (5.0mm) | .490 (12.4mm) | .040, .050, .060, .070, .080, .090, .100, .120, .130, .150, .215 | G |
| TO-207 | .500 (12.7mm) | .045 (1.1mm) | .195 (5.0mm) | .590 (15.0mm) | .040, .050, .060, .070, .090, .100, .120, .130, .150 | G |

UNLESS OTHERWISE SPECIFIED:
DIMENSIONS ARE IN INCHES

TOLERANCES

| DECIMALS | | ANGULAR | |
|---|---|---|---|
| .X | ± .1 | X° | ± 1° |
| .XX | ± .01 | | |
| .XXX | ± .005 | | |

Bivar®
4 THOMAS, IRVINE, CA.92618
TEL: (949) 951-8808 FAX: (949) 951-3974

PART NAME: DISS-O-PADS, WASH-AWAY COMPONENTS & GENERAL PURPOSE SPACERS

| DESIGNER | DATE | SIZE | DWG NAME | DWG NO. | REV |
|---|---|---|---|---|---|
| DAVID GREEN | 10/15/03 | A | | TO-XXX-XXX | D |
| CHECKER: M CHEN | DATE: 10/15/03 | SCALE 1=1 | CAGE CODE 32559 | SHEET 3 OF 3 | |

Общество с ограниченной ответственностью «МосЧип» ИНН 7719860671 / КПП 771901001
Адрес: 105318, г.Москва, ул.Щербаковская д.3, офис 1107

**Данный компонент на территории Российской Федерации**

**Вы можете приобрести в компании MosChip.**

Для оперативного оформления запроса Вам необходимо перейти по данной ссылке:

http://moschip.ru/get-element

Вы можете разместить у нас заказ для любого Вашего проекта, будь то серийное производство или разработка единичного прибора.

В нашем ассортименте представлены ведущие мировые производители активных и пассивных электронных компонентов.

Нашей специализацией является поставка электронной компонентной базы двойного назначения, продукции таких производителей как XILINX, Intel (ex.ALTERA), Vicor, Microchip, Texas Instruments, Analog Devices, Mini-Circuits, Amphenol, Glenair.

Сотрудничество с глобальными дистрибьюторами электронных компонентов, предоставляет возможность заказывать и получать с международных складов практически любой перечень компонентов в оптимальные для Вас сроки.

На всех этапах разработки и производства наши партнеры могут получить квалифицированную поддержку опытных инженеров.

Система менеджмента качества компании отвечает требованиям в соответствии с ГОСТ Р ИСО 9001, ГОСТ РВ 0015-002 и ЭС РД 009

**Офис по работе с юридическими лицами:**

105318, г.Москва, ул.Щербаковская д.3, офис 1107, 1118, ДЦ «Щербаковский»

Телефон: +7 495 668-12-70 (многоканальный)

Факс: +7 495 668-12-70 (доб.304)

E-mail: info@moschip.ru

Skype отдела продаж:
moschip.ru
moschip.ru_4
moschip.ru_6
moschip.ru_9