Embedded USB Mass Storage Drive (e230)

MTEDCAR002SAJ-1M2/1M2IT, MTEDCAR004SAJ-1N2/1N2IT
MTEDCAR008SAJ-1N2/1N2IT, MTEDCAR016SAJ-1N2/1N2IT
MTEDCBR002SAJ-1M2/1M2IT, MTEDCBR004SAJ-1N2/1N2IT
MTEDCBR008SAJ-1N2/1N2IT, MTEDCBR016SAJ-1N2/1N2IT
MTEDCBE002SAJ-1M2/1M2IT, MTEDCBE004SAJ-1N2/1N2IT
MTEDCBE008SAJ-1N2/1N2IT, MTEDCBE016SAJ-1N2/1N2IT
MTEDCAE002SAJ-1M2/1M2IT, MTEDCAE004SAJ-1N2/1N2IT
MTEDCAE008SAJ-1N2/1N2IT, MTEDCAE016SAJ-1N2/1N2IT

Features

- Micron® NAND Flash
- Interface: Universal Serial Bus (USB) Specification, Revision 2.0
- USB support
  - USB Specification, Revisions 2.0, 1.1
  - USB Mass Storage Class Specification, Revision 1.0
- Performance
  - Sequential READ[1]: 30 MB/s
  - Sequential WRITE[1]: 22 MB/s (2GB and 4GB); 28 MB/s (8GB and16GB)
- Reliability: >1 million device hours mean time between failure (MTBF)
- Endurance: useful operating life of at least 5 years under the following conditions:
  - 8760 power-on hours per year
  - Active 100% of power-on hours
  - Typical operating conditions[2]: 2GB module: 16 GB/day; 4GB module: 32 GB/day; 8GB module: 64 GB/day; 16GB module: 128 GB/day
- Static and dynamic wear-leveling
- 15-bit error correction code (ECC)
- Reliability reporting
- Capacity (unformatted)[3]: 2GB, 4GB, 8GB, or 16GB
- Form factor
  - Standard (36.9mm x 26.6mm x 9.6mm)
  - Low profile (36.9mm x 26.6mm x 5.8mm)
- Voltage: 5V ±5% and 3.3V ±5%
- Operating temperature
  - Commercial (0°C to +70°C)
  - Industrial (–40°C to +85°C)

Notes:
1. Typical transfer rate measured with H2BENCH 3.6.
2. Assumes that 70% of total usable drive capacity contains static files.
3. 1GB = 1 billion bytes; formatted capacity is less.

Warranty: Contact your Micron sales representative for further information regarding the product, including product warranties.

Micron Technology, Inc. reserves the right to change products or specifications without notice.
© 2011 Micron Technology, Inc. All rights reserved.
Products and specifications discussed herein are subject to change by Micron without notice.

Part Numbering Information

Micron's embedded USB drives are available in different configurations and densities. Visit www.micron.com for a list of valid part numbers.

Table 1: Part Number Example

Part Number Category											
Micron Technology	Product Family	Drive Interface	Drive Form Factor	Drive Density	NAND Flash Type	Product Family	Sector Size	NAND Component	Revision	Operating Temperature Range	Production Status
MT	ED	C	AE	002	S	AJ	-1	M	1	IT	ES

Table 2: Part Number Information Scheme

Part Number Category	Category Details
Micron Technology	Micron Technology
Product Family	ED = Embedded drive
Drive Interface	C = USB 2.0
Drive Form Factor	AE = Embedded USB: 5V standard profile (36.9mm x 26.6mm x 9.6mm)
	BE = Embedded USB: 5V low profile (36.9mm x 26.6mm x 5.8mm)
	AR = Embedded USB: 3V standard profile (36.9mm x 26.6mm x 9.6mm)
	BR = Embedded USB: 3V low profile (36.9mm x 26.6mm x 5.8mm)
Drive Density	002 = 2GB
	004 = 4GB
	008 = 8GB
	016 = 16GB
NAND Flash Type	S = SLC
Product Family	AJ = Option J
Sector Size	1 = 512-byte
NAND Component	M = 8Gb; x8; 3.3V
	N = 16Gb; x8; 3.3V
Revision	1 = First generation
	2 = Second generation
	3 = Third generation
Operating Temperature Range	Blank = Commercial (0°C to 70°C)
	IT = Industrial (40°C to 85°C)
Production Status	Blank = Production
	ES = Engineering sample
	MS = Mechanical sample

Micron Technology, Inc. reserves the right to change products or specifications without notice.
© 2011 Micron Technology, Inc. All rights reserved.

General Description

Micron embedded universal serial bus (USB) mass storage drives provide 2GB, 4GB, 8GB, or 16GB of USB 2.0-compatible memory storage in a small form factor. The embedded USB drive is an ideal solution for applications that require low cost and high reliability. Typical applications include PC caching and boot drives for embedded computing, server, and networking systems.

High performance, reliability, and easy implementation make Micron embedded USBs an ideal storage solution. To consistently deliver the best possible performance, the embedded USB uses only SLC NAND Flash, and all densities use two x8 NAND channels to the controller. In addition to being fast, SLC NAND Flash offers solid reliability, coupled with ECC and wear leveling. The USB system interface is widely available in many system designs and is easy to implement, enabling rapid time to market.

The embedded USB consists of two TSOP-packaged Micron NAND Flash components, a USB controller, and a 10-pin USB connector on a PCB. Different densities are available depending on the number of die in each package and the density of each NAND Flash die. The drive operates at 5V ±5% or 3.3V ±5%. It uses industry-standard 10-pin connectors and supports USB Specification, Revision 2.0. It is also backward compatible with Revision 1.1 and can be used with operating systems that support USB Mass Storage Class Specification, Revision 1.0.

Figure 1: Functional Block Diagram

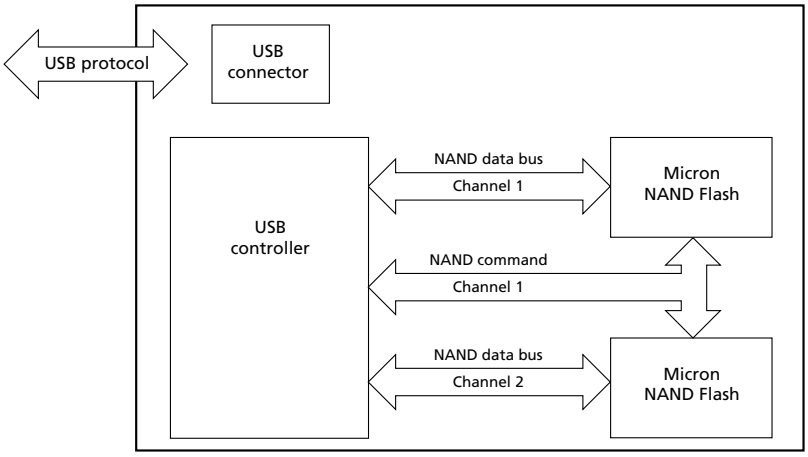

Table 3: Nominal Package Dimensions, Density, and Weight

	Value	Unit
Height	9.6 (standard) 5.8 (low profile)	mm
Width	26.6	mm
Length	36.9	mm
Density	2, 4, 8, 16	GB
Unit weight	4.5	g

Micron Technology, Inc. reserves the right to change products or specifications without notice.
© 2011 Micron Technology, Inc. All rights reserved.

Figure 2: Pin Assignments: 2 x 5 Connector

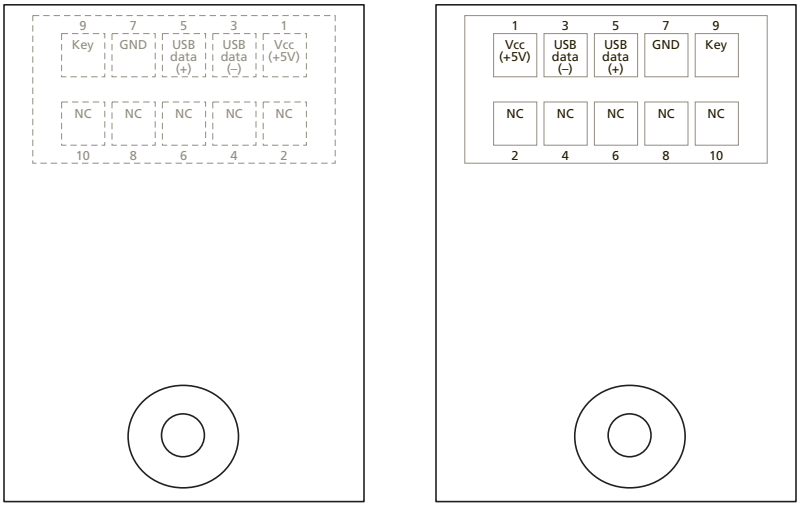

Top view (through PCB) Bottom view

Note: 1. Diagram not to scale.

Table 4: Signal/Pin Descriptions

Symbol	Type	Function
USB data (+), USB data (–)	I/O	**Data inputs/outputs**: The bidirectional I/Os transfer address, data, and instruction information. Data is output only during READ operations; at other times the I/Os are inputs.
V_{CC}	Supply	V_{CC} power supply pin.
V_{SS}	Supply	V_{SS} ground connection
NC	–	**No connect**: NC pins are not internally connected. These pins can be driven or left floating.
Key	–	This pin is keyed.

Micron Technology, Inc. reserves the right to change products or specifications without notice.
© 2011 Micron Technology, Inc. All rights reserved.

Error Management

The embedded USB incorporates advanced technology for defect and error management. It uses various combinations of hardware-based error correction algorithms and firmware-based wear-leveling algorithms.

Over the life of the drive, uncorrectable errors may occur. An uncorrectable error is defined as data that is reported as successfully programmed to the drive, but when it is read out of the drive, the data differs from what was programmed. See the Uncorrectable Bit Error Rate Table.

The mean time between failures (MTBF) can be predicted based on component reliability data obtained by following the methods referenced in the Telecordia SR-332 reliability prediction procedures for electronic equipment.

Table 5: System Reliability

Density	MTFB (Operating Hours)
2–16GB	>1 million device hours

Table 6: Uncorrectable Bit Error Rate

Uncorrectable Bit Error Rate (BER)[1]	Operation
<1 bit error in 10^{15} bits	READ

Note: 1. BER is measured with a WRITE-to-READ ratio of 1:1.

Wear-Leveling Algorithm

The controller adds a built-in RAM register unit to record the erase count of each block. Accordingly, the controller can decide the frequency of wear leveling and choose the proper blocks to swap. This technique successfully averages the erase count of the data blocks. Also, an enhanced wear leveling algorithm now includes most static blocks in the recycling pool. Increasing the number of blocks makes the wear-leveling algorithm more robust, and in turn extends product life.

Micron Technology, Inc. reserves the right to change products or specifications without notice.
© 2011 Micron Technology, Inc. All rights reserved.

Electrical Characteristics

Stresses greater than those listed may cause permanent damage to the drive. This is a stress rating only, and functional operation of the drive at these or any other conditions above those indicated in the operational sections of this specification is not implied. Exposure to absolute maximum rating conditions for extended periods may affect reliability.

Table 7: Absolute Maximum Ratings

Parameter/Condition	Symbol	Min	Max	Unit
V_{CC} supply voltage	V_{CC}	–0.6	5.25	V

Table 8: DC and Operating Characteristics

Parameter/Condition	Symbol	Min	Typ	Max	Unit	Condition
Standby current	Isb	–	60	70	mA	V_{CC} = 3V
		–	50	60	mA	V_{CC} = 5V
Active current	$I_{CC}1$	–	100	120	mA	V_{CC} = 3V /5V

Table 9: Recommended Operating Conditions

Parameter/Condition		Symbol	Min	Typ	Max	Unit
Operating temperature	Commercial	T_A	0	–	70	°C
	Industrial		–40	–	85	°C
V_{CC} supply voltage	5V	V_{CC}	4.75	5.00	5.25	V
	3.3V	V_{CC}	2.85	3.3	3.5	V
Ground supply voltage		V_{SS}	0	0	0	V

Table 10: Shock and Vibration

Parameter/Condition	Specification
Shock	1500g/0.5ms
Vibration	5–500Hz at 3.1G

Micron Technology, Inc. reserves the right to change products or specifications without notice.
© 2011 Micron Technology, Inc. All rights reserved.

Compliance

Micron embedded USB drives comply with the following requirements:

- CE (Europe): EN55022, 2006 Class B and EN55024, 1998 + A1: 2001 + A2:2003
- FCC: CFR Title 47, Part 15, ICES-003, all Class B
- UL (US): approval to UL-60950-1, 2nd Edition, 2007-03-27, IEC 60950-1:2005, 2nd Edition
- RoHS, “green” package

Configuration

The following configuration options are available:

- Micron's embedded USB drive can be configured as a boot drive.
- The standard fix configuration should be mounted as local drive.

Note: The embedded USB drive cannot be configured as a removable drive.

Micron Technology, Inc. reserves the right to change products or specifications without notice.
© 2011 Micron Technology, Inc. All rights reserved.

Mechanical Information

The standard 10-pin (2 x 5) female electrical connector has a height of 7.4mm and a pitch of 2.54mm. It supports the standard USB 2.0 interface. The low profile 10-pin (2 x 5) female electrical connector has a height of 3.6mm and a pitch of 2.0mm. It supports the standard USB 2.0 interface. A mounting hole is also provided on the PCB for a stable, reliable connection to the mounting board.

The motherboard pin headers listed in Table 9 are compatible with Micron's embedded USB drives. Pin headers that are not listed may also be compatible.

Table 11: Compatible Pin Headers

Manufacturer	Profile	Part Number	Type
Pinrex	Standard	212-92-05GB01	SMT
		210-92-05GB01	Straight
Amtek	Standard	PHIFS25-205GB	Press fit
		PHIS25-205GB	Straight
Samtec	Low profile	TMM-105-01-S-D-02	Straight

Reference Documents

Reference documentation for the USB 2.0 standard (USB 2.0 specification, technical documents, compliance test procedures, and other related documents) can be found at www.usb.org/developers/docs.

Micron Technology, Inc. reserves the right to change products or specifications without notice.
© 2011 Micron Technology, Inc. All rights reserved.

Package Dimensions

Figure 3: Embedded USB Package, Standard Profile

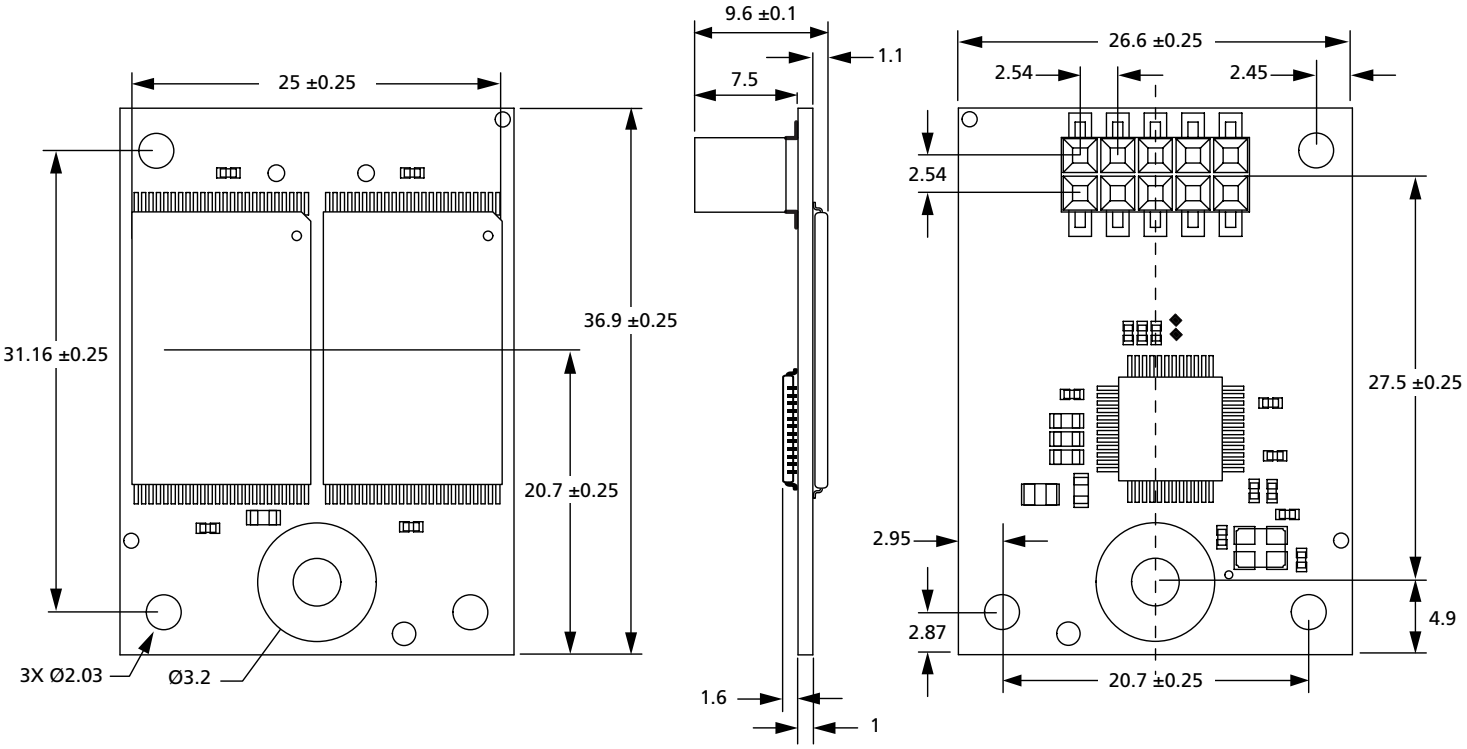

Note: 1. All dimensions are in millimeters.

Micron Technology, Inc. reserves the right to change products or specifications without notice.
© 2011 Micron Technology, Inc. All rights reserved.

Figure 4: Embedded USB Package, Low Profile

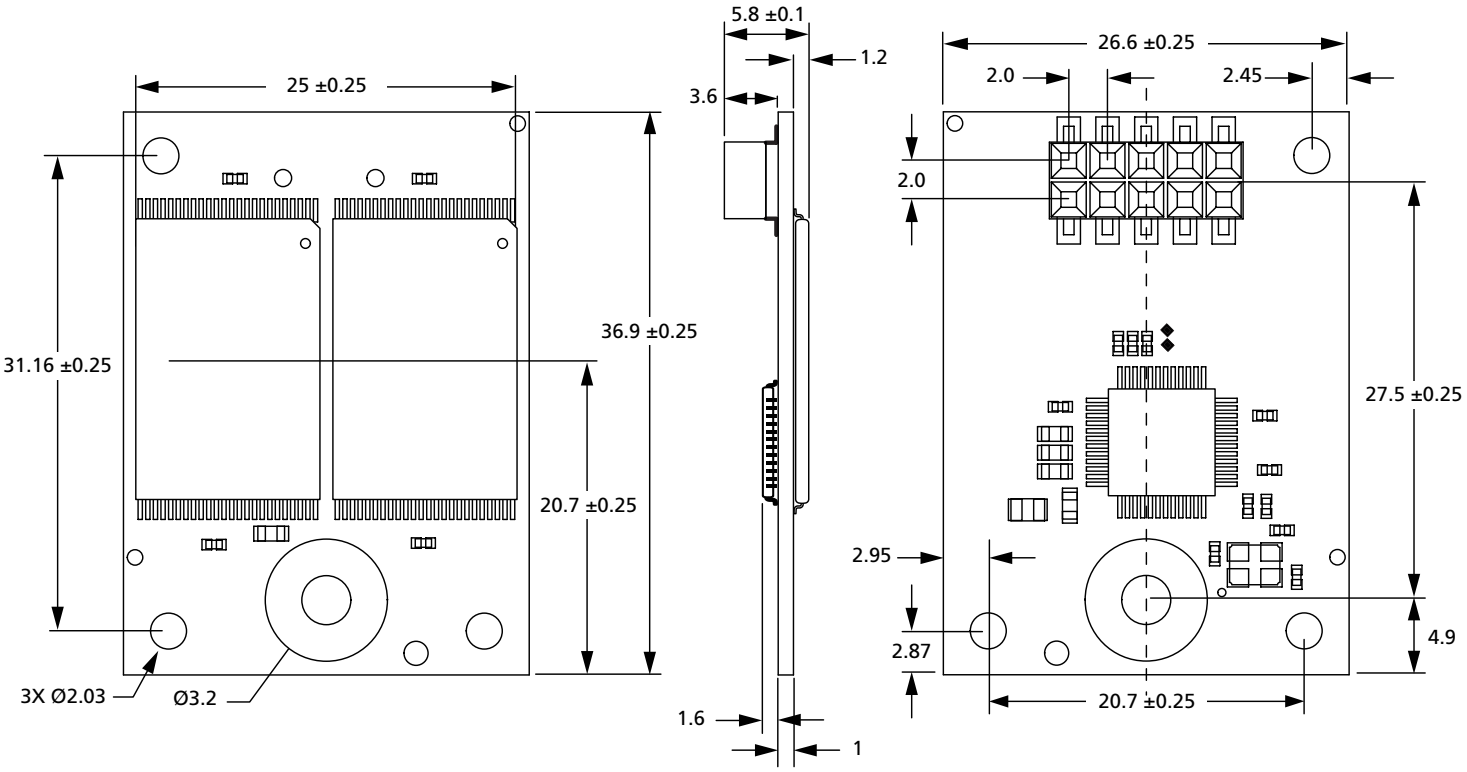

Note: 1. All dimensions are in millimeters.

Micron Technology, Inc. reserves the right to change products or specifications without notice.
© 2011 Micron Technology, Inc. All rights reserved.

Revision History

Rev. D – 4/13

- Updated the package drawing
- Updated densities in order information

Rev. C, Advance – 7/12

- Added 3V information to DC and Operating Conditions table

Rev. B, Advance – 9/11

- Added low profile and 3V information

Rev. A, Advance – 4/11

- Initial release

8000 S. Federal Way, P.O. Box 6, Boise, ID 83707-0006, Tel: 208-368-3900
www.micron.com/productsupport Customer Comment Line: 800-932-4992
Micron and the Micron logo are trademarks of Micron Technology, Inc.
All other trademarks are the property of their respective owners.
This data sheet contains minimum and maximum limits specified over the power supply and temperature range set forth herein. Although considered final, these specifications are subject to change, as further product development and data characterization sometimes occur.

Micron Technology, Inc. reserves the right to change products or specifications without notice.
© 2011 Micron Technology, Inc. All rights reserved.

Общество с ограниченной ответственностью «МосЧип» ИНН 7719860671 / КПП 771901001
Адрес: 105318, г.Москва, ул.Щербаковская д.3, офис 1107

Данный компонент на территории Российской Федерации

Вы можете приобрести в компании MosChip.

Для оперативного оформления запроса Вам необходимо перейти по данной ссылке:

http://moschip.ru/get-element

Вы можете разместить у нас заказ для любого Вашего проекта, будь то серийное производство или разработка единичного прибора.

В нашем ассортименте представлены ведущие мировые производители активных и пассивных электронных компонентов.

Нашей специализацией является поставка электронной компонентной базы двойного назначения, продукции таких производителей как XILINX, Intel (ex.ALTERA), Vicor, Microchip, Texas Instruments, Analog Devices, Mini-Circuits, Amphenol, Glenair.

Сотрудничество с глобальными дистрибьюторами электронных компонентов, предоставляет возможность заказывать и получать с международных складов практически любой перечень компонентов в оптимальные для Вас сроки.

На всех этапах разработки и производства наши партнеры могут получить квалифицированную поддержку опытных инженеров.

Система менеджмента качества компании отвечает требованиям в соответствии с ГОСТ Р ИСО 9001, ГОСТ РВ 0015-002 и ЭС РД 009

Офис по работе с юридическими лицами:

105318, г.Москва, ул.Щербаковская д.3, офис 1107, 1118, ДЦ «Щербаковский»

Телефон: +7 495 668-12-70 (многоканальный)

Факс: +7 495 668-12-70 (доб.304)

E-mail: info@moschip.ru

Skype отдела продаж:
moschip.ru
moschip.ru_4
moschip.ru_6
moschip.ru_9