PARTS LIST

QTY	REFERENCE DESIGNATION	PART NUMBER	PART DESCRIPTION
1	-	Model 1010L or 1010J	Model 1010 Accelerometer (Sold Separately)
1	PCB1	100-00023-01	Printed Circuit Board
1	C1	753-00001-23	Capacitor, Surface Mount Chip, Size 1205, 0.1uF
1	H1	702-00001-10	Header, Right Angle, 2x5 Pins

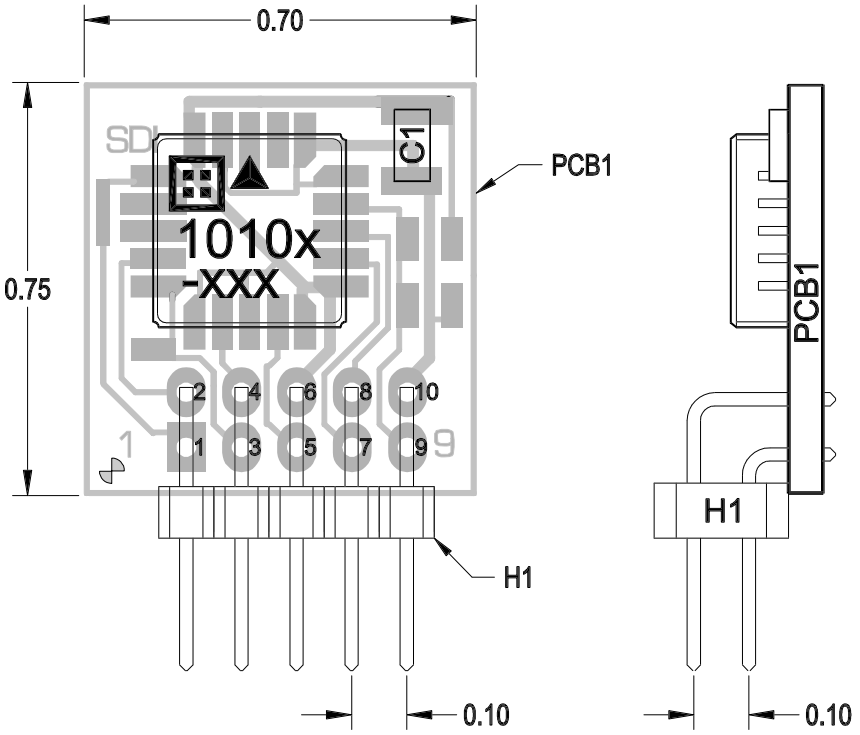

HEADER PIN	SIGNAL NAME	SIGNAL DESCRITPION
1	DV	Deflection Voltage input
2	-	(not used)
3	CLK	Clock input
4	CNT	Count output
5	DIR	Direction output
6	VDD	+5V Power
7	CLK/2	Clock÷2 output
8	$\overline{\text{DIR}}$	Direction not output
9	-	(not used)
10	GND	Ground

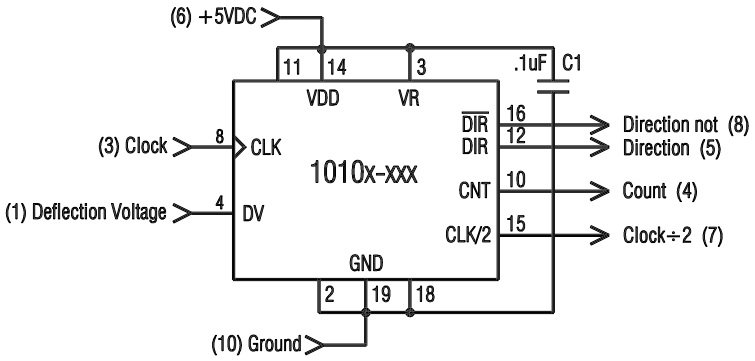

TB1010 & TB1210 SOLDER ASSEMBLY TIPS

Reflow using a hotplate is the preferred method for assembling the model TB1010 or TB1210 and Sn62 or Sn63 type solder is recommended. Hand soldering using a fine tipped soldering iron is possible but difficult without a steady hand and some form of visual magnification due to the small size of the connections. When using the hand solder iron method, it's best to purchase the J-Leaded version (1010J or 1210J) for easier visual inspection of the finished solder joints.

Pre-Tinning of Accelerometer Leads is Recommended: To prevent gold migration embrittlement of the solder joints, it is best to pre-tin the accelerometer leads. The solder bath method of pre-tinning is not recommended due to the high degree of heat the interior of the device gets subjected to which may cause permanent shifts in the bias and scale factor. Instead, we recommend tinning one lead at a time, to prevent excessive heating of the accelerometer, using a fine-tipped solder iron and solder wire.

Hotplate Attach Method using Solder Paste or Solder Wire: Apply solder to the circuit board's pads using Sn62 or Sn63 solder paste or pre-tin the pads using solder and a fine tipped soldering iron. If pre-tinning with an iron, apply flux to the tinned pads prior to placing the components. Place the accelerometer & C1 (R1 & R2 also for TB1210) in their proper positions onto the pasted or tinned pads then place the entire assembly onto a hotplate that has been pre-heated to around 200°C. Leave on hotplate only long enough for the solder to flow on all pads **(DO NOT OVERHEAT!)**

Solder Iron Attach Method using Solder Paste: Apply solder paste to the circuit board's pads where the accelerometer & C1 (R1 & R2 also for TB1210) will be attached. Place the components in their proper positions onto their pasted pads. Press gently on the top of the accelerometer with an appropriate tool to keep it from moving and heat one of the corner pads, then an opposite corner pad with the soldering iron. Make sure the accelerometer is positioned so all 20 of its connections are centered on the board's pads. Once the two opposite corner pads are soldered, the part is secure to the board and you can work your way around soldering the remaining 18 connections. Allow the accelerometer to cool in between soldering each pin to prevent overheating. Solder the remaining passive component(s) to the board one at a time by pressing on their tops with an appropriate tool and applying heat to each pad. Once the part has seated on its tinned pad, solder the other end of the part to the board.

Solder Iron Attach Method using Solder Wire: Solder pre-tin two opposite corner pads on the circuit board where the accelerometer will be attached and one of the two pads for C1 (R1 & R2 also for TB1210). Place the accelerometer in its proper position onto the board. Press gently on the top of the accelerometer and heat one of the corner pads that was tinned and the part will drop down through the solder and seat on the board. Do the same at the opposite corner pad that was tinned. Make sure the accelerometer is positioned so all 20 of its connections are centered on the board's pads. Once the two opposite corner pads are soldered, the part is secure to the board and you can work your way around soldering the remaining 18 connections. Allow the accelerometer to cool in between soldering each pin to prevent overheating. Solder the remaining component(s) by gently pressing on their top(s) with an appropriate tool and applying heat to the tinned pad end only. Once the part has seated on its tinned pad, solder the other end of the part to the board.

Общество с ограниченной ответственностью «МосЧип» ИНН 7719860671 / КПП 771901001
Адрес: 105318, г.Москва, ул.Щербаковская д.3, офис 1107

Данный компонент на территории Российской Федерации

Вы можете приобрести в компании MosChip.

Для оперативного оформления запроса Вам необходимо перейти по данной ссылке:

http://moschip.ru/get-element

Вы можете разместить у нас заказ для любого Вашего проекта, будь то серийное производство или разработка единичного прибора.

В нашем ассортименте представлены ведущие мировые производители активных и пассивных электронных компонентов.

Нашей специализацией является поставка электронной компонентной базы двойного назначения, продукции таких производителей как XILINX, Intel (ex.ALTERA), Vicor, Microchip, Texas Instruments, Analog Devices, Mini-Circuits, Amphenol, Glenair.

Сотрудничество с глобальными дистрибьюторами электронных компонентов, предоставляет возможность заказывать и получать с международных складов практически любой перечень компонентов в оптимальные для Вас сроки.

На всех этапах разработки и производства наши партнеры могут получить квалифицированную поддержку опытных инженеров.

Система менеджмента качества компании отвечает требованиям в соответствии с ГОСТ Р ИСО 9001, ГОСТ РВ 0015-002 и ЭС РД 009

Офис по работе с юридическими лицами:

105318, г.Москва, ул.Щербаковская д.3, офис 1107, 1118, ДЦ «Щербаковский»

Телефон: +7 495 668-12-70 (многоканальный)

Факс: +7 495 668-12-70 (доб.304)

E-mail: info@moschip.ru

Skype отдела продаж:
moschip.ru
moschip.ru_4
moschip.ru_6
moschip.ru_9