THIS DRAWING IS UNPUBLISHED. RELEASED FOR PUBLICATION -,- .
© COPYRIGHT – TE Connectivity ALL RIGHTS RESERVED.

REVISIONS					
P	LTR	DESCRIPTION	DATE	DWN	APVD
	2	PRELIMINARY	09OCT2018	J.T	K.K

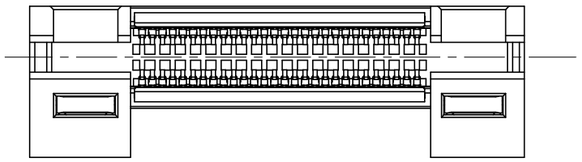

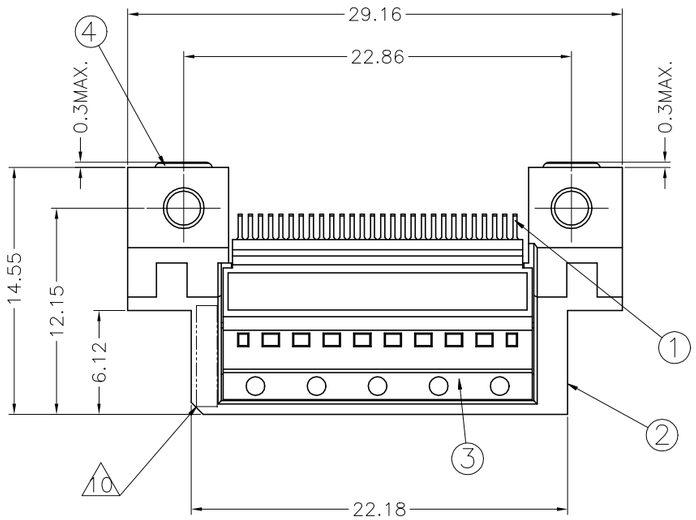

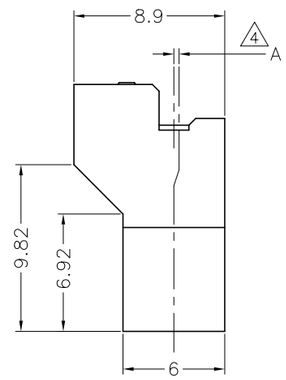

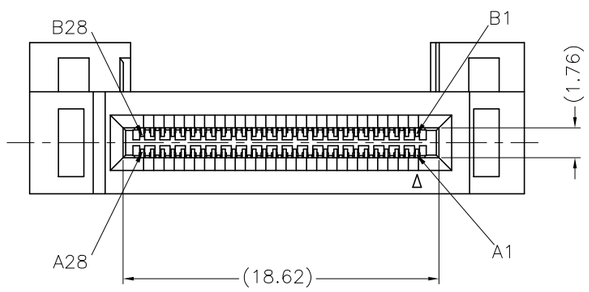

NOTE

1. HOUSING AND COVER: LCP, UL94–V0, BLACK.
   CONTACTS: COPPER ALLOY.
2. GOLD PLATED ON CONTACT AREA.
   TIN PLATE ON SOLDER TAIL AREA.
3. APPLICABLE HOST BOARD THICKNESS
4. OFFSET AMOUNT BETWEEN AIC BOARD AND HOST BOARD CENTER LINE.
5. SEE MSA SPECIFICATION FOR ADDITIONAL PADDLE CARD LAYOUTS COMPATABLE WITH THIS RECEPTACLE AND FOR OPTIONAL SPLIT CONTACT PAD LAYOUTS FOR THE PADDLE CARD. SPECIFICATION PINOUT MAY ALSO DESIGNATE PAD SEQUENCE DIFFERENT FROM ILLUSTRATION.
6. POSITIONS DESIGNATED AS "SIGNAL" ARE RECOMMENDED LOCATIONS FOR HIGH SPEED DIFFERENTIAL PAIR SIGNALING. THESE LOCATIONS MAY ALSO BE USED FOR SUPPORTING SIDEBAND SIGNALS OR OTHER UTILITY PURPOSES.POSITIONS DESIGNATED AS "GROUND" ARE REQUIRED WHEN SUPPORTING HIGH SPEED DIFFERENTIAL SIGNALS. THESE LOCATIONS MAY ALSO BE USED FOR SIDEBAND SIGNALS OR OTHER UTILITY PUPOSES.
7. CONTROLLED ACROSS PADS.
8. THIS LAYOUT IS ADOPTED IN SFF–TA–1002 Rev 1.1
9. SCREW IS ENCLOSED BY SEPARATE PACKING.
   SCREW SIZE: M2
   SCREW LENGTH(REF): 6
   HEAD SIZE(REF): ø3.5, 1.3HEIGHT
10. DATE CODE MARKING.

PLATING	4 DIM A	3 DIM B (HOST BOARD THICKNESS)	PARTS No.
0.76μm Au	0	$1.57^{\pm 0.15}$	2340311–1

AS SHOWN : –1

HVM DESIGN

QTY	NAME	ITEM No.
2	M2 SCREW	
2	M2 NUT PLATE	4
2	COVER HOUSING 28P	3
1	HOUSING	2
56	CONTACT	1

9

PROPOSAL DRAWING

THIS PRINT IS
PRELIMINARY
UNQUALIFIED PRODUCT
THESE SPEC MAY BE CHANGED BASED ON ADDITIONAL INVESTIGATION AND TESTING WITHOUT YOUR PERMISSION.

PRELIMINARY

THIS DRAWING IS A CONTROLLED DOCUMENT.

DIMENSIONS: mm

TOLERANCES UNLESS OTHERWISE SPECIFIED: ±0.3
0 PLC ± –
1 PLC ± –
2 PLC ± –
3 PLC ± –
4 PLC ± –
ANGLES ± –

MATERIAL 1 | FINISH 2

DWN J.TSUJI 01OCT2018
CHK K.KOBAYASHI 01OCT2018
APVD K.KOBAYASHI 01OCT2018
PRODUCT SPEC –
APPLICATION SPEC –
WEIGHT 0

TE Connectivity

NAME 56 POSITION SLIVER 2.0 STRADDLE MOUNT

SIZE A2 | CAGE CODE 00779 | DRAWING NO C–2340331 | RESTRICTED TO –

CUSTOMER DRAWING | SCALE 4:1 | SHEET 1 OF 4 | REV 2

2340331

THIS DRAWING IS UNPUBLISHED. RELEASED FOR PUBLICATION -,- .
© COPYRIGHT – TE Connectivity ALL RIGHTS RESERVED.

REVISIONS

P	LTR	DESCRIPTION	DATE	DWN	APVD
	–	SEE SHEET 1	–	–	–

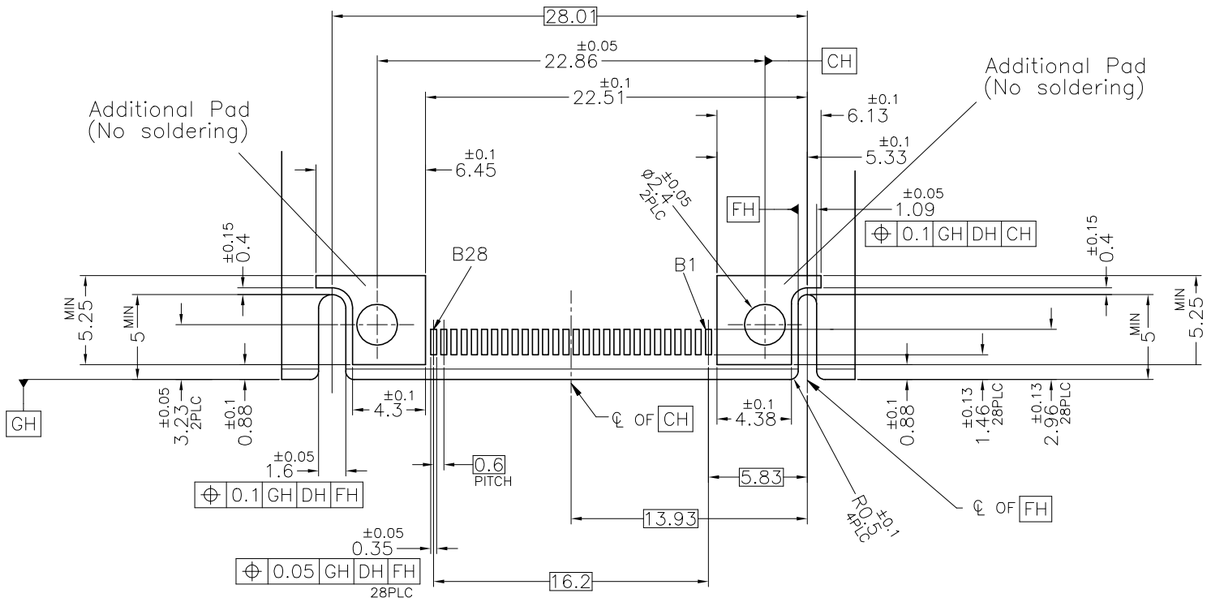

REFERENCE HOST BOARD LAYOUT

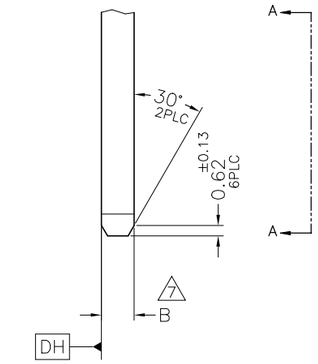

3 APPLICABLE THICKNESS

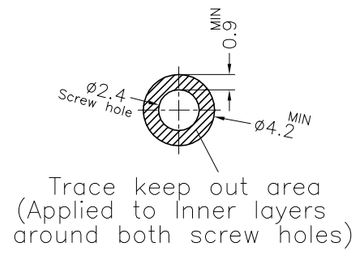

Trace keep out area (Applied to Inner layers around both screw holes)

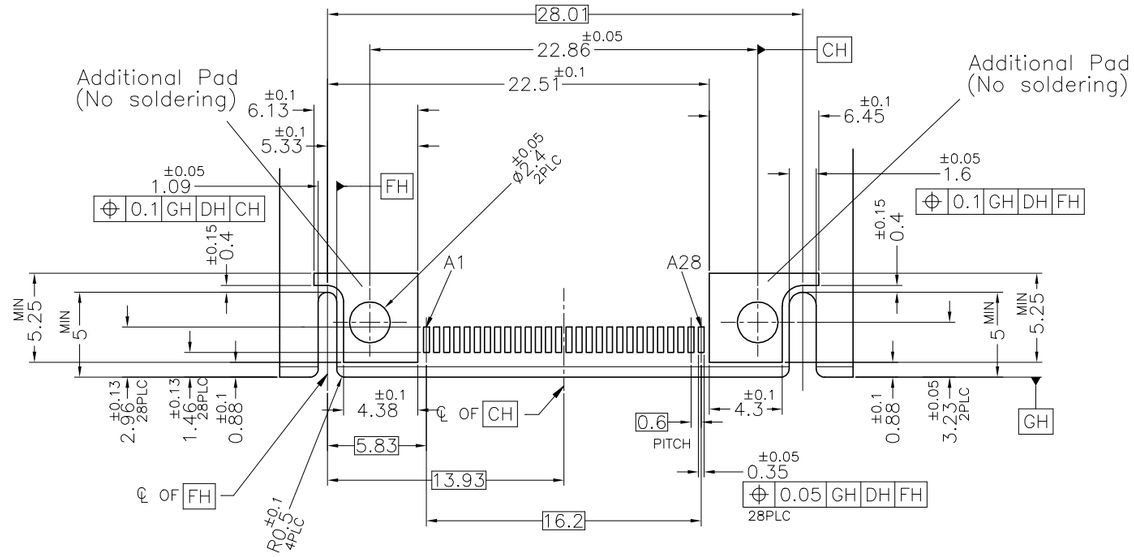

PROPOSAL DRAWING

THIS PRINT IS
PRELIMINARY
UNQUALIFIED PRODUCT
THESE SPEC MAY BE CHANGED BASED ON ADDITIONAL INVESTIGATION AND TESTING WITHOUT YOUR PERMISSION.

THIS DRAWING IS A CONTROLLED DOCUMENT.

DIMENSIONS: mm

TOLERANCES UNLESS OTHERWISE SPECIFIED: ±0.3
0 PLC ± –
1 PLC ± –
2 PLC ± –
3 PLC ± –
4 PLC ± –
ANGLES ± –

MATERIAL
FINISH

DWN –
CHK –
APVD –
PRODUCT SPEC –
APPLICATION SPEC –
WEIGHT 0

TE Connectivity

NAME
56 POSITION
SLIVER 2.0 STRADDLE MOUNT

SIZE	CAGE CODE	DRAWING NO	RESTRICTED TO
A2	00779	C-2340331	–

CUSTOMER DRAWING | SCALE 4:1 | SHEET 2 OF 4 | REV 2

2340331

1471-9 (1/15)

THIS DRAWING IS UNPUBLISHED. RELEASED FOR PUBLICATION -,- .
© COPYRIGHT – TE Connectivity ALL RIGHTS RESERVED.

REVISIONS

P	LTR	DESCRIPTION	DATE	DWN	APVD
	–	SEE SHEET 1	–	–	–

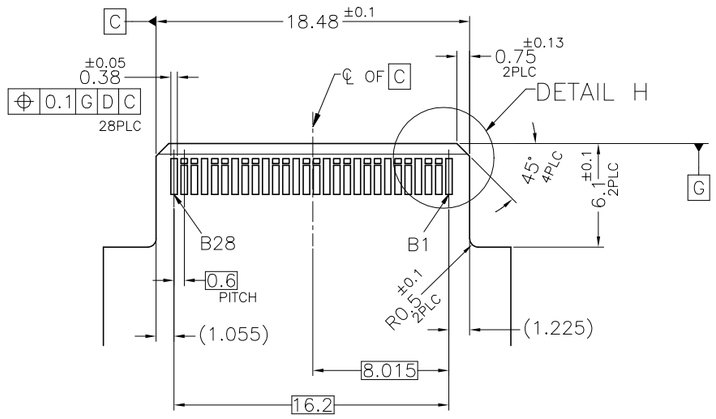

8 REFERENCE AIC BOARD LAYOUT

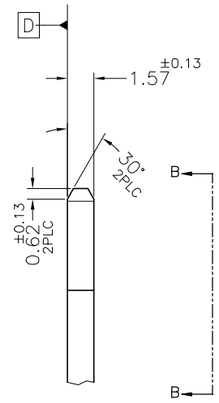

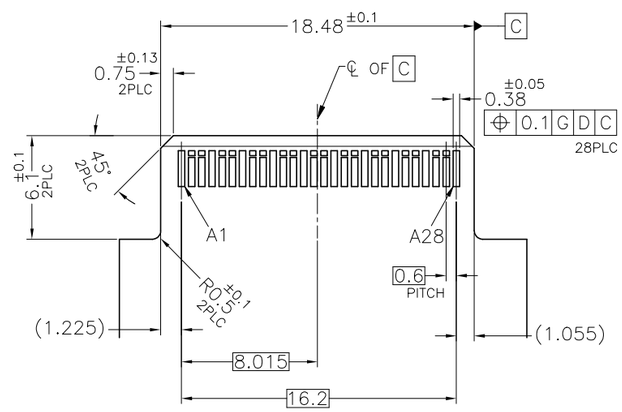

VIEW B–B

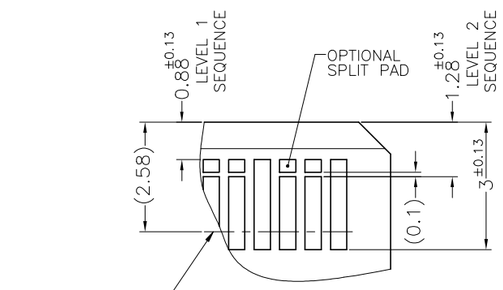

5 DETAIL H
SCALE 10:1

2340331

PROPOSAL DRAWING

THIS PRINT IS
PRELIMINARY
UNQUALIFIED PRODUCT
THESE SPEC MAY BE CHANGED BASED ON ADDITIONAL INVESTIGATION AND TESTING WITHOUT YOUR PERMISSION.

THIS DRAWING IS A CONTROLLED DOCUMENT.

DIMENSIONS: mm

TOLERANCES UNLESS OTHERWISE SPECIFIED: ±0.3
0 PLC ± –
1 PLC ± –
2 PLC ± –
3 PLC ± –
4 PLC ± –
ANGLES ± –

MATERIAL
FINISH

DWN –
CHK –
APVD –
PRODUCT SPEC –
APPLICATION SPEC –
WEIGHT 0

TE Connectivity

NAME
56 POSITION
SLIVER 2.0 STRADDLE MOUNT

SIZE	CAGE CODE	DRAWING NO	RESTRICTED TO
A2	00779	C-2340331	–

CUSTOMER DRAWING | SCALE 4:1 | SHEET 3 OF 4 | REV 2

THIS DRAWING IS UNPUBLISHED. RELEASED FOR PUBLICATION -,- .
© COPYRIGHT - TE Connectivity ALL RIGHTS RESERVED.

REVISIONS					
P	LTR	DESCRIPTION	DATE	DWN	APVD
	-	SEE SHEET 1	-	-	-

CONNECTOR CONTACT IDENTIFICATION 5 6

CONTACT NUMBER	SIDE A	SIDE B
1	GROUND	GROUND
2	SIGNAL	SIGNAL
3	SIGNAL	SIGNAL
4	GROUND	GROUND
5	SIGNAL	SIGNAL
6	SIGNAL	SIGNAL
7	GROUND	GROUND
8	SIGNAL	SIGNAL
9	SIGNAL	SIGNAL
10	GROUND	GROUND
11	SIGNAL	SIGNAL
12	SIGNAL	SIGNAL
13	GROUND	GROUND
14	SIGNAL	SIGNAL
15	SIGNAL	SIGNAL
16	GROUND	GROUND
17	SIGNAL	SIGNAL
18	SIGNAL	SIGNAL
19	GROUND	GROUND
20	SIGNAL	SIGNAL
21	SIGNAL	SIGNAL
22	GROUND	GROUND
23	SIGNAL	SIGNAL
24	SIGNAL	SIGNAL
25	GROUND	GROUND
26	SIGNAL	SIGNAL
27	SIGNAL	SIGNAL
28	GROUND	GROUND

PROPOSAL DRAWING

THIS PRINT IS
PRELIMINARY
UNQUALIFIED PRODUCT
THESE SPEC MAY BE CHANGED BASED ON ADDITIONAL INVESTIGATION AND TESTING WITHOUT YOUR PERMISSION.

THIS DRAWING IS A CONTROLLED DOCUMENT.

DIMENSIONS: mm

TOLERANCES UNLESS OTHERWISE SPECIFIED:
0 PLC ± -
1 PLC ± -
2 PLC ± -
3 PLC ± -
4 PLC ± -
ANGLES ± -

MATERIAL

FINISH

DWN -
CHK -
APVD -
PRODUCT SPEC -
APPLICATION SPEC -
WEIGHT 0

TE Connectivity

NAME
56 POSITION
SLIVER 2.0 STRADDLE MOUNT

SIZE	CAGE CODE	DRAWING NO	RESTRICTED TO
A2	00779	C-2340331	-

CUSTOMER DRAWING | SCALE 1:1 | SHEET 4 OF 4 | REV 2

2340331

1471-9 (1/15)

Общество с ограниченной ответственностью «МосЧип» ИНН 7719860671 / КПП 771901001
Адрес: 105318, г.Москва, ул.Щербаковская д.3, офис 1107

Данный компонент на территории Российской Федерации

Вы можете приобрести в компании MosChip.

Для оперативного оформления запроса Вам необходимо перейти по данной ссылке:

http://moschip.ru/get-element

Вы можете разместить у нас заказ для любого Вашего проекта, будь то серийное производство или разработка единичного прибора.

В нашем ассортименте представлены ведущие мировые производители активных и пассивных электронных компонентов.

Нашей специализацией является поставка электронной компонентной базы двойного назначения, продукции таких производителей как XILINX, Intel (ex.ALTERA), Vicor, Microchip, Texas Instruments, Analog Devices, Mini-Circuits, Amphenol, Glenair.

Сотрудничество с глобальными дистрибьюторами электронных компонентов, предоставляет возможность заказывать и получать с международных складов практически любой перечень компонентов в оптимальные для Вас сроки.

На всех этапах разработки и производства наши партнеры могут получить квалифицированную поддержку опытных инженеров.

Система менеджмента качества компании отвечает требованиям в соответствии с ГОСТ Р ИСО 9001, ГОСТ РВ 0015-002 и ЭС РД 009

Офис по работе с юридическими лицами:

105318, г.Москва, ул.Щербаковская д.3, офис 1107, 1118, ДЦ «Щербаковский»

Телефон: +7 495 668-12-70 (многоканальный)

Факс: +7 495 668-12-70 (доб.304)

E-mail: info@moschip.ru

Skype отдела продаж:
moschip.ru
moschip.ru_4
moschip.ru_6
moschip.ru_9