MPF — Metallized Polypropylene, Oil Filled Motor Run

RoHS

MALLORY

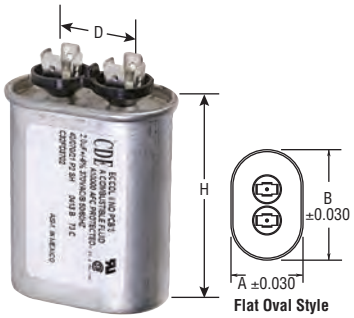

Flat Oval Style

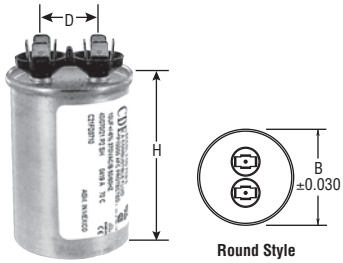

Round Style

Metallized polypropylene film dielectric capacitors offer a new option for AC applications. All devices have metal cases and four prong quick disconnect terminals.* These capacitors pack the same capacitance and voltage capabilities of a conventional paper capacitor into a smaller case of considerably lighter weight. In addition, these parts have extremely low dissipation factors. They offer high reliability and long life and meet EIA Standard RS-456 characteristic "E". Allow 1/2" clearance above the terminals on fluid filled capacitors for interrupter operation.

***Note:** 21 Style round unit has 3 prongs.

Specifications
- Capacitance Range: 1 to 80 µF
- Tolerance: ±10%
- Voltage Range: 330 VAC, 370 VAC, 440 VAC
- Operating Temperature: –40°C to 70°C

Features
- Internal Protector
- Environmentally Safe
- Long Life
- Double Rolled Seams
- Light Weight
- Small Size
- High Reliability

Applications
- Lighting
- Motors
- Power Factor Correction
- Phase Shifting
- Air Conditioning
- Refrigeration*

Flat Oval Style (In.)				
Style	A	B	D	Industry Type
32	1 5/16	2 5/32	13/16	1 1/4 F.O.
37	1 29/32	2 29/32	13/16	1 3/4 F.O.

Round Containers (In.)				
Style	A	B	D	Industry Type
21	1 3/4	1 7/8	13/16	1 3/4 Round
23	2	2 1/8	13/16	2 Round
24	2 1/2	2 5/8	13/16	2 1/2 Round

Flat Oval Style

Stock No.	Mfr.'s Type	Cap. (µF)	VAC	Base Style	H (In.)	EACH 1-9	EACH 10-24
70186170	32FD3702-F	2	370	32	2.13	8.98	8.08
70186105	32FD3703-F	3	370	32	2.13	8.98	8.08
70186157	32FD3704-F	4	370	32	2.13	9.29	8.36
70186159	32FD3705-F	5	370	32	2.38	8.09	7.28
70186114	32FD3706-F	6	370	32	2.38	8.36	7.52
70186169	32FD37075-F	7.5	370	32	2.38	8.65	7.78
70186113	32FD3710-F	10	370	32	2.63	9.71	8.74
70186265	37FD37125-F	12.5	370	37	2.63	15.63	14.07
70186112	37FD3715-F	15	370	37	2.63	12.69	11.42
70186160	37FD3720-F	20	370	37	2.63	13.78	12.40
70186236	37FD3725-F	25	370	37	2.63	14.76	13.29
70186266	32FB4405-F	5	440	32	2.63	8.87	7.98

Round Style

Stock No.	Mfr.'s Type	Cap. (µF)	VAC	Base Style	H (In.)	EACH 1-9	EACH 10-24
70186214	21FD3710-F	10	370	21	2.63	10.51	9.46
70186167	21FD3715-F	15	370	21	2.63	11.61	10.44
70186173	21FD37175-F	17.5	370	21	2.63	11.90	10.71
70186240	21FD3720-F	20	370	21	2.63	13.34	12.00
70186164	21FD3725-F	25	370	21	3.00	14.11	12.71
70186174	21FD3730-F	30	370	21	3.00	14.85	13.36
70186175	21FD3735-F	35	370	21	3.75	16.21	14.59
70186120	21FD3740-F	40	370	21	3.75	17.27	15.55
70186176	23FD3750-F	50	370	23	3.75	21.61	19.45
70186115	23FD3760-F	60	370	23	3.75	23.06	20.96
70186158	24FD3770-F	70	370	24	3.75	26.25	23.86
70186156	24FB4435-F	35	440	24	3.00	18.78	16.90

PSU — AC Motor Start, Aluminum Electrolytic

RoHS

MALLORY

Specifications
- Capacitance Range: 21 to 1280 µF
- Voltage Range: 110 to 330 VAC
- Operating Temperature: –40°C to +65°C
- Operating Frequency: 50 to 60 Hz
- Power Factor: 10% max. (12% ≤30 µF)

Features
- For Motor Starting and Other Intermittent Duty AC Applications
- Dual Quick Connect Terminals
- Rugged Bakelite Case
- Compact Size; Easily Mounted
- Meets EIA RS-463 Type 2

110/125 VAC

Stock No.	Mfr.'s Type	Cap. (µF)	Case Code	Dia. (In.)	Length (In.)	EACH
70186358	PSU8815	88-106	1	1.4375	2.750	4.78
70186359	PSU10815	108-130	1	1.4375	2.750	4.89
70186257	PSU14515	145-174	1	1.4375	2.750	5.14
70186360	PSU16115	161-193	1	1.4375	2.750	5.34
70186361	PSU18915A	189-227	1	1.4375	2.750	5.58
70186052	PSU21615	216-259	2	1.4375	3.375	6.11
70186260	PSU23315A	233-280	2	1.4375	3.375	6.25
70186262	PSU24315A	243-292	2	1.4375	3.375	6.38
70186362	PSU27015A	270-324	2	1.4375	3.375	6.63
70186053	PSU30015	300-360	4	1.8125	3.375	7.30
70190304	PSU32415A	324-389	3	1.4375	4.375	8.00
70186252	PSU34015	340-408	4	1.8125	3.375	7.65
70186363	PSU40015	400-480	4	1.8125	3.375	8.18
70186089	PSU40015A	400-480	2	1.4375	3.375	7.94
70186261	PSU43015A	430-516	2	1.4375	3.375	8.45
70186364	PSU46015A	460-552	4	1.8125	3.375	8.76
70186366	PSU54015A	540-648	4	1.8125	3.375	9.49
70186365	PSU54015B	540-648	5	1.8125	4.375	10.40
70186256	PSU59015A	590-708	5	1.8125	4.375	10.94
70186259	PSU70815	708-850	5	1.8125	4.375	12.03
70186367	PSU100015A	1000-1200	7	2.0625	4.375	15.79

220/250 VAC

Stock No.	Mfr.'s Type	Cap. (µF)	Case Code	Dia. (In.)	Length (In.)	EACH
70186049	PSU2135	21-25	1	1.4370	2.750	7.05
70186050	PSU4735	47-56	2	1.4375	3.375	7.30
70186251	PSU5335	53-64	2	1.4375	3.375	7.54
70186368	PSU6435	64-77	2	1.4375	3.375	7.92
70186253	PSU8835	88-106	4	1.8125	3.375	8.98
70186369	PSU10835A	108-130	4	1.8125	3.375	9.71
70186051	PSU13035A	130-156	4	1.8125	3.375	10.58
70186254	PSU14535	145-174	5	1.8125	4.375	12.07
70186370	PSU16135A	161-193	7	2.0625	4.375	14.90
70226583	PSU18935B	189-227	6	1.0625	3.375	15.05
70186054	PSU21635A	216-259	7	2.0625	4.375	17.05
70186371	PSU23335A	233-280	7	2.0625	4.375	17.72
70186372	PSU27035A	270-324	7	2.0625	4.375	16.98

330 VAC

70186056	PSU2130	21-25	1	1.4375	2.750	7.05
70186373	PSU2530	25-30	2	1.4375	3.375	7.58
70186374	PSU3030	30-36	2	1.4375	3.375	7.94
70186375	PSU3630	36-43	2	1.4375	3.375	8.36
70186090	PSU5330B	53-64	4	1.8125	3.375	9.49
70186376	PSU6430	64-77	4	1.8125	3.375	10.27
70186258	PSU7230B	72-86	5	1.8125	3.375	10.40
70186075	PSU10830B	108-130	7	2.0625	4.375	14.73
70186055	PSU12430A	124-149	7	2.0620	4.375	15.27
70186255	PSU21630	216-259	8	2.9625	4.375	20.37
70190302	PSU27030	270-324	8	2.9625	4.375	15.48

Mounting Accessories

RoHS

MALLORY

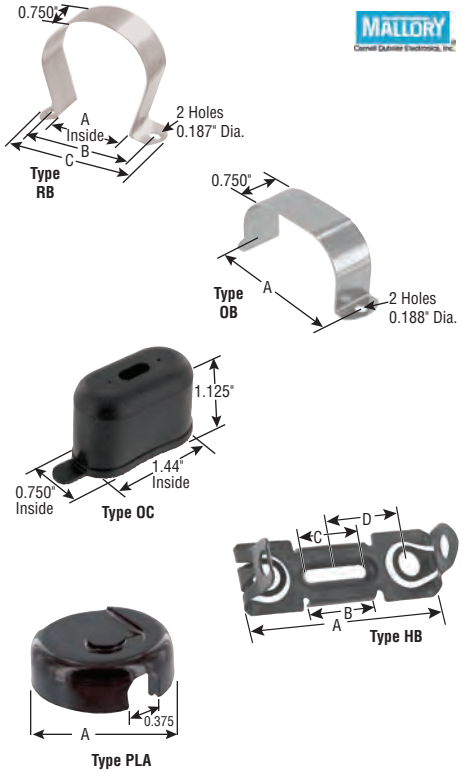

Type RB Cylindrical Mounting Clamp

This clamp has a galvanized finish and is designed for use with the round base style motor run capacitor (MPF). **Material Thickness:** 0.035".

Stock No.	Mfr.'s Type	Base Style	Dimensions (In.) A*	B	C	EACH 1-9	10-24	25-99
70186350	RB175	21	1.75	2.50	2.875	3.85	3.46	3.15
70186351	RB200	23	2.00	2.75	3.125	3.42	3.08	2.80
70186352	RB250	24	2.50	3.25	3.625	3.71	3.34	3.04

*Nom. Diameter.

Type OB Oval Mounting Clamp

This clamp has a galvanized finish and is designed for use with the flat oval base style motor run capacitor (MPF/MSF). **Material Thickness:** 0.036".

Stock No.	Mfr.'s Type	Base Style	Dimensions (In.) Base Size	A	EACH 1-9	10-24	25-99
70186353	OB2	32	1 5/16 × 2 5/32	2 9/16	3.49	3.14	2.86
70186354	OB4	37	1 31/32 × 2 29/32	3 5/16	3.58	3.22	2.93
70186355	OB3	38	1 31/32 × 3 21/32	4 1/16	3.71	3.34	3.04

Type OC Neoprene Terminal Insulator

For use on capacitor types MPF/MSF, this neoprene terminal insulator or "boot", is used to insulate and protect the terminal area of single section units only. Material is classified UL 94 V-1 when tested per UL94.

Stock No.	Mfr.'s Type	EACH
70186357	OC1	6.61

Type HB Horizontal Mounting Bracket

HB brackets are used with PLA end caps. The bracket is assembled to the motor or any suitable surface by two screws in line at any convenient position within the center-to-center dimension (C) shown in the chart. **Material:** 0.042 Spring steel with black parkerized finish.

Stock No.	Mfr.'s Type	Case Code	Dimensions (In.) A	B	C*	D	EACH
70186328	HB2	1	3 3/8	1 11/64	7/8	1.258	8.27
70186349	HB4	2-4-6	4 1/64	1 13/16	1 1/2	1 37/64	7.25

*C dimension=max. mounting hole center. Use 10-32" flat head screws.

PLA End Caps

PLA end caps are usually used with HB type brackets, with wire hole away from bracket. For off motor mounting. **Diameter A:** 1 7/16".

Stock No.	Mfr.'s Type	Case Code	EACH
70186356	PLA3	1-2-3	3.16

Общество с ограниченной ответственностью «МосЧип» ИНН 7719860671 / КПП 771901001
Адрес: 105318, г.Москва, ул.Щербаковская д.3, офис 1107

Данный компонент на территории Российской Федерации

Вы можете приобрести в компании MosChip.

Для оперативного оформления запроса Вам необходимо перейти по данной ссылке:

http://moschip.ru/get-element

Вы можете разместить у нас заказ для любого Вашего проекта, будь то серийное производство или разработка единичного прибора.

В нашем ассортименте представлены ведущие мировые производители активных и пассивных электронных компонентов.

Нашей специализацией является поставка электронной компонентной базы двойного назначения, продукции таких производителей как XILINX, Intel (ex.ALTERA), Vicor, Microchip, Texas Instruments, Analog Devices, Mini-Circuits, Amphenol, Glenair.

Сотрудничество с глобальными дистрибьюторами электронных компонентов, предоставляет возможность заказывать и получать с международных складов практически любой перечень компонентов в оптимальные для Вас сроки.

На всех этапах разработки и производства наши партнеры могут получить квалифицированную поддержку опытных инженеров.

Система менеджмента качества компании отвечает требованиям в соответствии с ГОСТ Р ИСО 9001, ГОСТ РВ 0015-002 и ЭС РД 009

Офис по работе с юридическими лицами:

105318, г.Москва, ул.Щербаковская д.3, офис 1107, 1118, ДЦ «Щербаковский»

Телефон: +7 495 668-12-70 (многоканальный)

Факс: +7 495 668-12-70 (доб.304)

E-mail: info@moschip.ru

Skype отдела продаж:
moschip.ru
moschip.ru_4
moschip.ru_6
moschip.ru_9