BD7682FJ-LB Evaluation Board

-24V1A 24W-
PCB4046 Rev. A

Rohm Co., Ltd
Application Engineering Div.
06, Apr. , 2016

1. Schematic

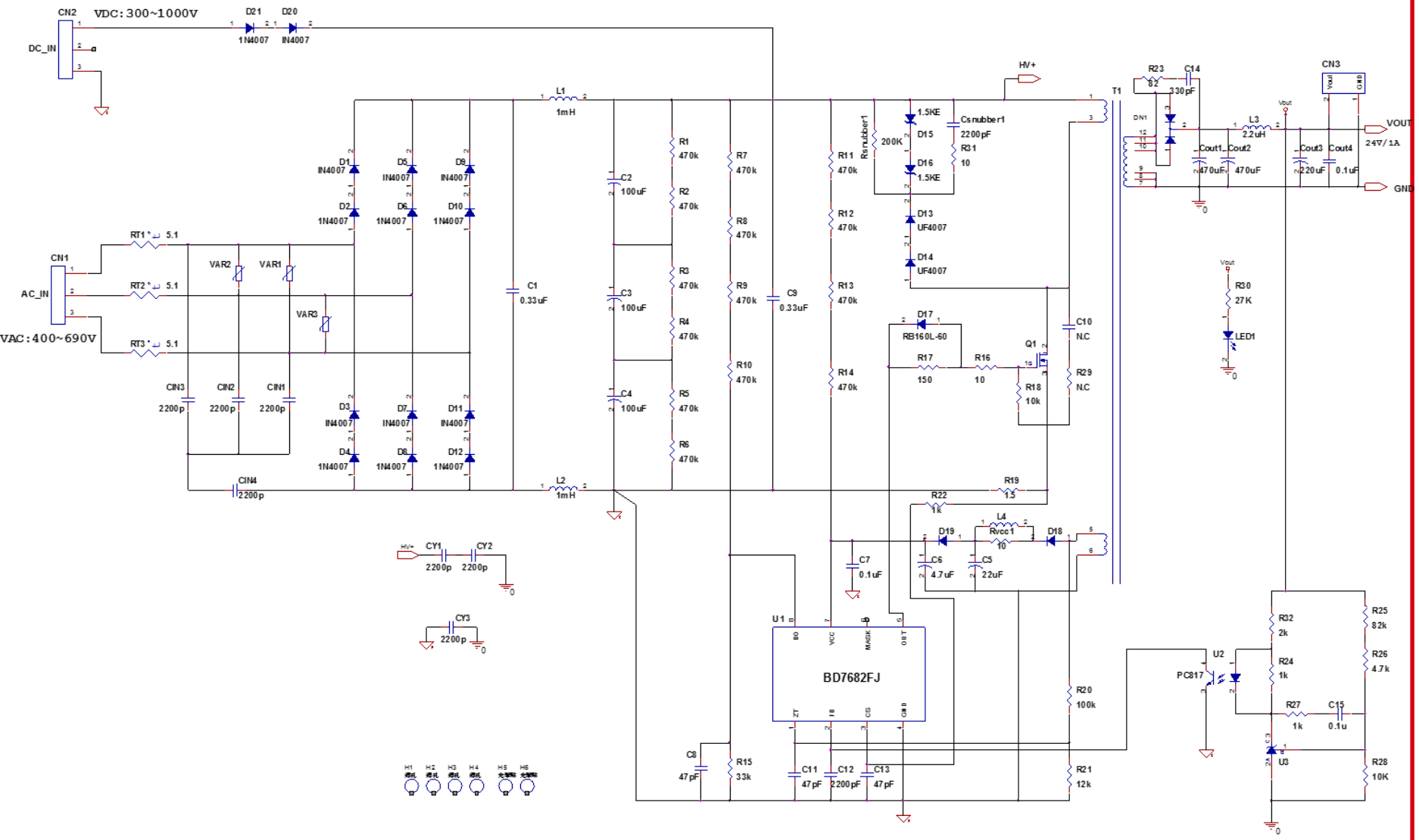

2. Placement

Confidential

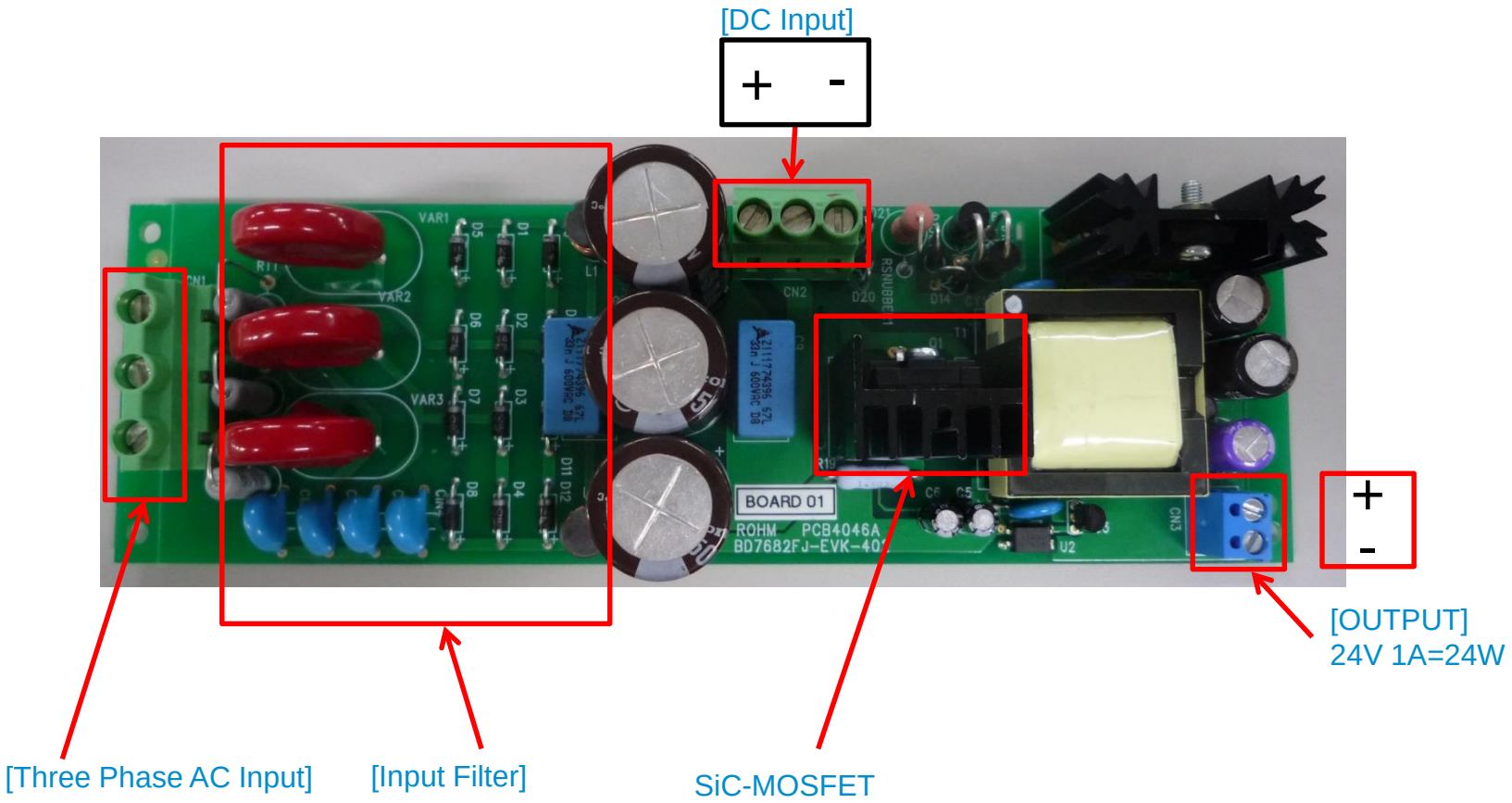

3. Placement

Confidential

[DC Input]

+ -

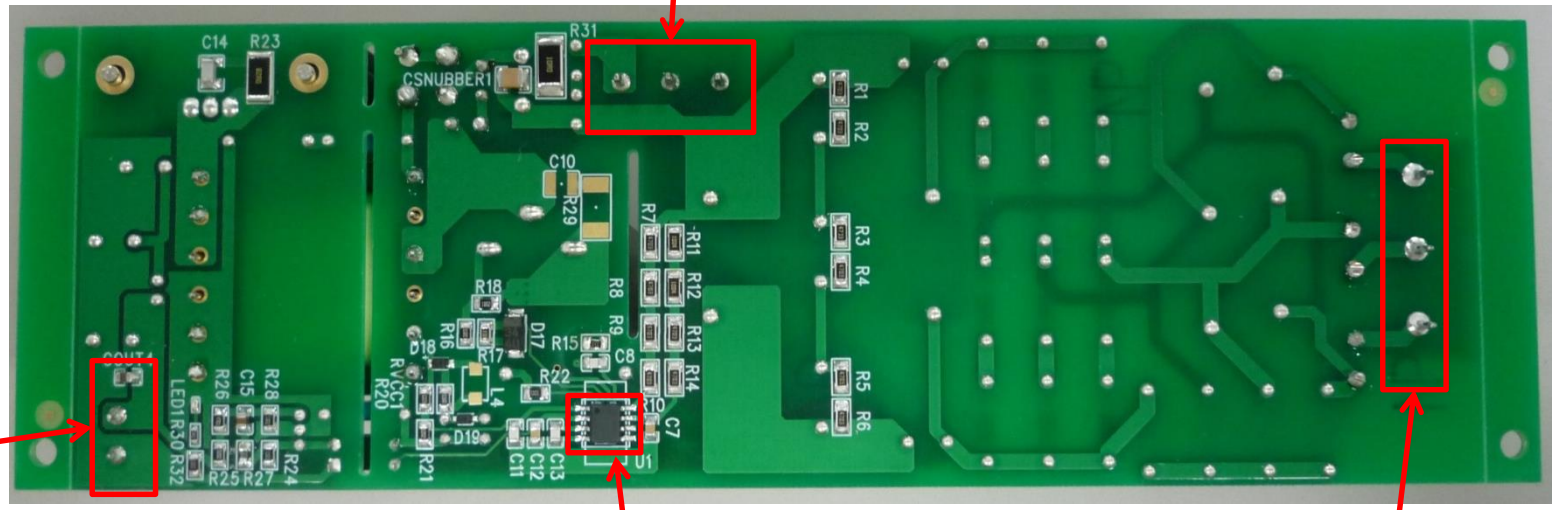

+
-

[OUTPUT]
24V 1A=24W

BD7682FJ-LB

[Three Phase AC Input]

4. Evaluation data

DC300V

Io [A]	Vo [V]	Po [W]	Iin [A]	Vin [V]	Pin [W]	η [%]	FB [V]	Fsw [KHz]
0	24.09	0.00	0.045	300	0.3	0.0%		–
0.01	24.09	0.24	0.005	300	0.6	38.9%	0.49	–
0.02	24.09	0.48	0.005	300	0.9	51.3%	0.49	–
0.05	24.08	1.20	0.008	300	1.9	64.0%	0.53	32
0.1	24.08	2.41	0.012	300	3.2	75.0%	0.63	45
0.2	24.08	4.82	0.021	300	5.8	82.7%	0.80	62
0.3	24.08	7.22	0.031	300	8.5	85.4%	0.88	70
0.4	24.08	9.63	0.040	300	11.1	86.9%	0.93	84
0.5	24.08	12.04	0.049	300	13.7	87.9%	1.04	78
0.6	24.08	14.45	0.058	300	16.3	88.6%	1.10	98
0.7	24.08	16.86	0.067	300	18.9	89.1%	1.17	102
0.8	24.08	19.26	0.076	300	21.5	89.6%	1.18	116
0.9	24.08	21.67	0.084	300	24.1	89.9%	1.23	110
1	24.08	24.08	0.094	300	26.8	90.0%	1.44	99
1.1	24.08	26.49	0.104	300	29.4	90.1%	1.61	92
1.2	24.08	28.90	0.115	300	32.1	90.2%	1.71	87
1.3	24.08	31.30	0.124	300	34.7	90.1%	1.87	81

1.35 OLP

DC600V

Io [A]	Vo [V]	Po [W]	Iin [A]	Vin [V]	Pin [W]	η [%]	FB [V]	Fsw [KHz]
0	24.09	0.00	0.009	600	0.9	0.0%	0.48	–
0.01	24.09	0.24	0.009	600	1.1	21.5%	0.49	–
0.02	24.09	0.48	0.009	600	1.5	32.1%	0.49	–
0.05	24.08	1.20	0.009	600	2.5	48.2%	0.51	–
0.1	24.08	2.41	0.010	600	4.0	59.6%	0.56	40
0.2	24.08	4.82	0.014	600	6.8	70.8%	0.70	51
0.3	24.08	7.22	0.018	600	9.5	75.7%	0.81	64
0.4	24.08	9.63	0.023	600	12.3	78.4%	0.91	74
0.5	24.08	12.04	0.027	600	14.9	80.9%	0.95	72
0.6	24.08	14.45	0.032	600	17.5	82.6%	1.07	84
0.7	24.07	16.85	0.036	600	20.1	83.6%	1.08	98
0.8	24.07	19.26	0.041	600	22.8	84.5%	1.15	101
0.9	24.07	21.66	0.046	600	25.4	85.3%	1.22	100
1	24.07	24.07	0.050	600	28.0	86.0%	1.25	103
1.1	24.07	26.48	0.054	600	30.6	86.4%	1.28	109
1.2	24.07	28.88	0.059	600	33.2	86.9%	1.29	119
1.3	24.07	31.29	0.063	600	35.8	87.4%	1.41	113
1.4	24.07	33.70	0.068	600	38.4	87.7%	1.53	108
1.5	24.07	36.11	0.073	600	41.0	88.0%	1.65	98
1.6	24.07	38.51	0.078	600	43.6	88.3%	1.77	96
1.7	24.07	40.92	0.084	600	46.2	88.5%	1.88	91

1.74 OLP

DC900V

Io [A]	Vo [V]	Po [W]	Iin [A]	Vin [V]	Pin [W]	η [%]	FB [V]	Fsw [KHz]
0	24.08	0.00	0.013	900	1.7	0.0%	0.49	–
0.01	24.08	0.24	0.013	900	2.1	11.7%	0.49	–
0.02	24.08	0.48	0.013	900	2.4	20.1%	0.49	–
0.05	24.08	1.20	0.013	900	3.5	34.4%	0.53	29
0.1	24.08	2.41	0.014	900	5.3	45.4%	0.59	40
0.2	24.07	4.81	0.015	900	8.4	57.4%	0.65	47
0.3	24.07	7.22	0.018	900	11.3	63.7%	0.75	59
0.4	24.06	9.62	0.020	900	14.2	67.8%	0.82	66
0.5	24.06	12.03	0.023	900	17.0	70.7%	0.89	72
0.6	24.06	14.44	0.026	900	19.7	73.5%	0.96	92
0.7	24.06	16.84	0.029	900	22.4	75.2%	1.05	84
0.8	24.06	19.25	0.031	900	25.1	76.7%	1.07	103
0.9	24.06	21.65	0.034	900	27.9	77.6%	1.07	103
1	24.06	24.06	0.038	900	30.5	78.8%	1.20	97
1.1	24.06	26.47	0.041	900	33.2	79.7%	1.20	118
1.2	24.06	28.87	0.044	900	35.9	80.4%	1.23	100
1.3	24.06	31.28	0.047	900	38.7	80.9%	1.26	117
1.4	24.06	33.68	0.050	900	41.4	81.4%	1.26	116
1.5	24.05	36.08	0.052	900	44.1	81.8%	1.38	111
1.6	24.06	38.50	0.055	900	46.5	82.9%	1.53	106
1.7	24.06	40.90	0.058	900	48.8	83.9%	1.67	102
1.8	24.06	43.31	0.062	900	51.2	84.6%	1.82	87
1.9	24.06	45.71	0.065	900	54.0	84.6%	1.85	94

1.97 OLP

- This data is using DCIN
- Tested one hour after switch on. (Thermister hot situation)
- Using ACIN input low voltage situation, Efficiency little bit low down.
  Please see next page.

5. Efficiency Data From each Input Terminal

5

Confidential

Po(W)	300V	600V	900V
0	0%	0%	0%
0	39%	22%	12%
1	51%	32%	20%
1	64%	48%	34%
2	75%	60%	45%
5	83%	71%	57%
7	85%	76%	64%
10	87%	78%	68%
12	88%	81%	71%
14	89%	83%	73%
17	89%	84%	75%
19	90%	84%	77%
21	90%	85%	78%
25	90%	86%	79%
26	90%	86%	80%
29	90%	87%	80%
31	90%	87%	81%
33	88%	88%	81%
36	88%	88%	82%

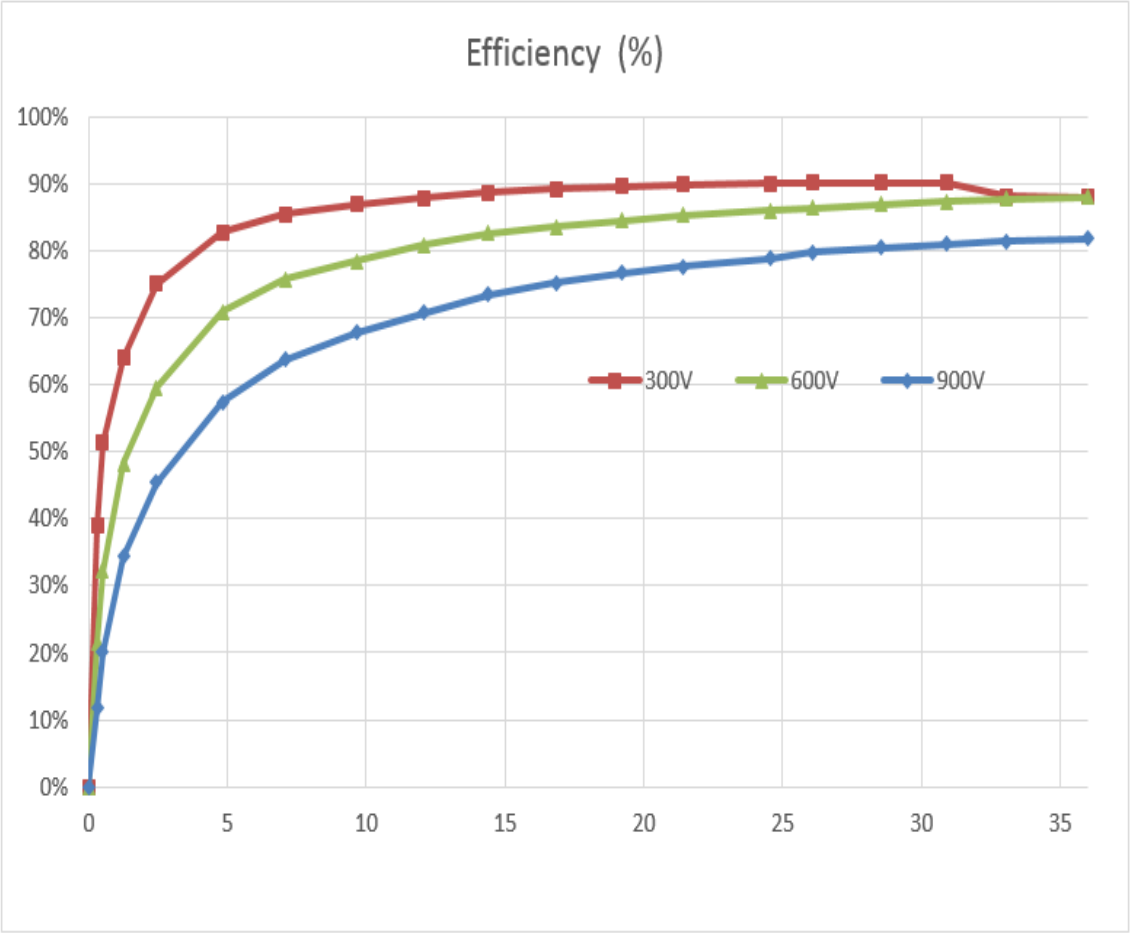

6. Efficiency Data From each Input Terminal

Confidential

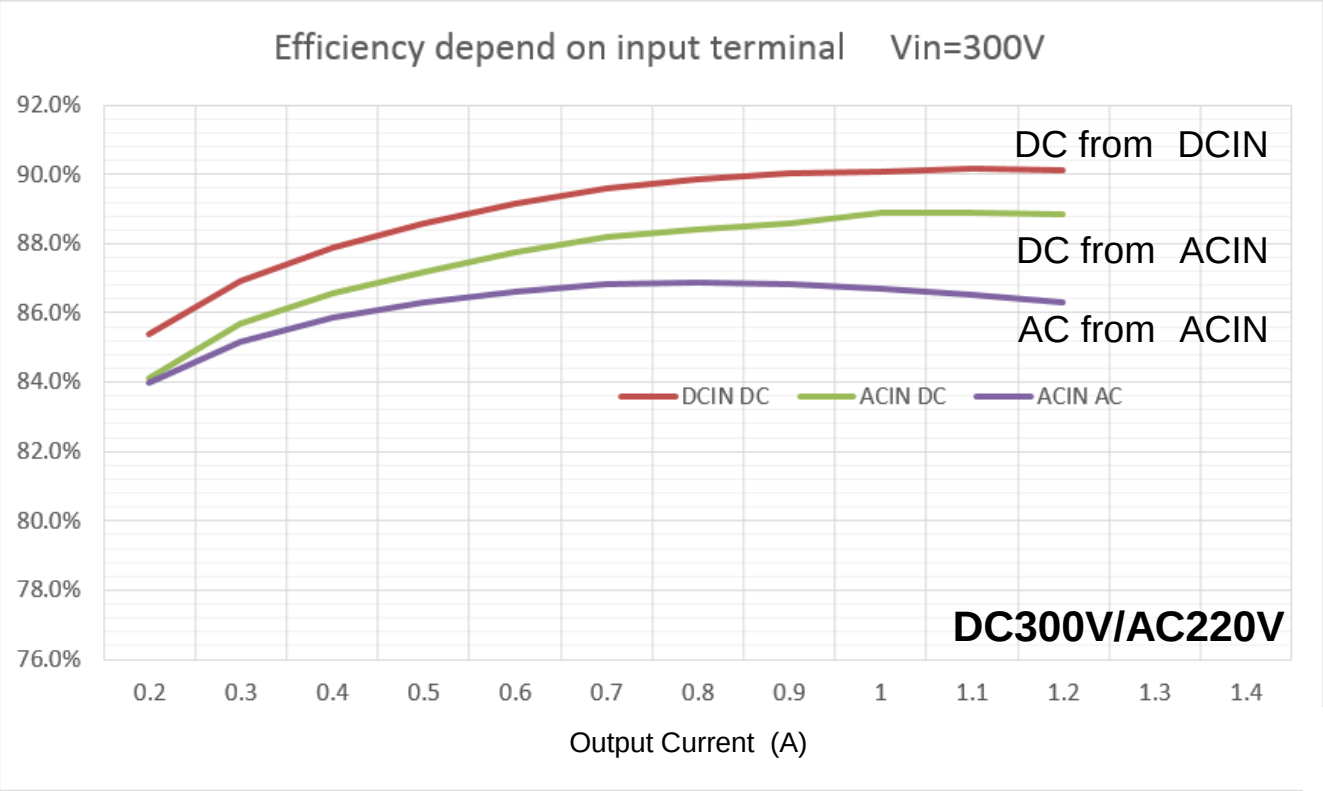

DCIN

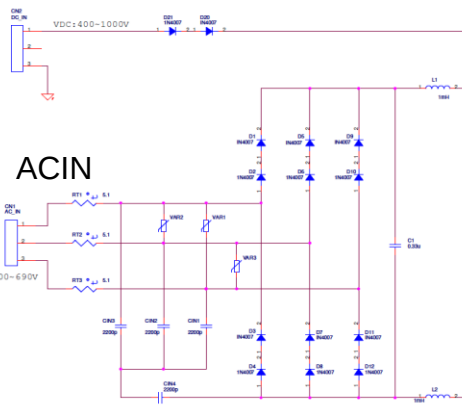

ACIN

- This board has two input terminal. DCIN and ACIN.
- Efficiency depend on input terminal.
  Because of input impedance not same.

7. Parts List

Item	Part Description	Quantity	Manufacturer	Manufacturer part number
CN1	Terminal Block, 3x1, 9.52MM, TH	1	Phoenix Contact	1714984
CN2	Terminal Block, 3x1, 9.52MM, TH	1	Phoenix Contact	1714968
CN3	WR-TBL_5.0mm_Horizontal Serie101_THT	1	WURTH ELECTRONIK	69110171002
VAR1	VARISTOR 1080V 10KA DISC 20MM	1	Littelfuse Inc	TMOV20RP750E
VAR2	VARISTOR 1080V 10KA DISC 20MM	1	Littelfuse Inc	TMOV20RP750E
VAR3	VARISTOR 1080V 10KA DISC 20MM	1	Littelfuse Inc	TMOV20RP750E
RT1,RT2,RT3	Fusible ResistorResistor, 2W, 5%	3	Max-Quality Co., LTD	FKN2W10JTB
C1,C9	Film Cap 0.033UF 1.6KV_DC TH	2	TDK_EPCOS Inc	B32672L1333J
CIN1, CIN2, CIN3,CIN4	CAP, X1Y1, 250VAC	3	Rise Power Corp	WDE222M9HL
C2,C3,C4	AL CAP, 100uF, 450V, +/-20%	3	Nichicon	UPT2W101MHD
CY1,CY2,CY3	CAP, X1Y1, 1KV	3	Shinyspace Co.,Ltd	DY5P222K1K08D
L1,L2	HV Inductor, Shielded , 1mH, TH	2	Wurth Elektronik	768772102
Rsnubber1	RES 200K OHM 3W 1% AXIAL	1	Faithful link corp	CFSJ100K
RVCC1	RES, 11 ohm, 1%, 0.125W, 0805	1	ROHM	MCR10ERTF11R0
R1	RES, 470k ohm, 1%, 0.25W, 1206	1	ROHM	MCR18ERTF4703
R2	RES, 470k ohm, 1%, 0.25W, 1206	1	ROHM	MCR18ERTF4703
R3	RES, 470k ohm, 1%, 0.25W, 1206	1	ROHM	MCR18ERTF4703
R4	RES, 470k ohm, 1%, 0.25W, 1206	1	ROHM	MCR18ERTF4703
R5	RES, 470k ohm, 1%, 0.25W, 1206	1	ROHM	MCR18ERTF4703
R6	RES, 470k ohm, 1%, 0.25W, 1206	1	ROHM	MCR18ERTF4703
R7 R8	RES, 470k ohm, 1%, 0.25W, 1206 RES, 470k ohm, 1%, 0.25W, 1206	1 1	ROHM ROHM	KTR18EZPF4703 KTR18EZPF4703
R9	RES, 470k ohm, 1%, 0.25W, 1206	1	ROHM	KTR18EZPF4703
R10	RES, 470k ohm, 1%, 0.25W, 1206	1	ROHM	KTR18EZPF4703
R11	RES, 1M ohm, 1%, 0.25W, 1206	1	ROHM	KTR18EZPF1004
R12	RES, 1M ohm, 1%, 0.25W, 1206	1	ROHM	KTR18EZPF1004
R13	RES, 470k ohm, 1%, 0.25W, 1206	1	ROHM	KTR18EZPF4703
R14	RES, 470k ohm, 1%, 0.25W, 1206	1	ROHM	KTR18EZPF4703
R15	RES, 15k ohm, 1%, 0.125W, 0805	1	ROHM	MCR10ERTF1502
R16	RES, 10 ohm, 1%, 0.125W, 0805	1	ROHM	MCR10ERTF10R0
R17	RES, 150 ohm, 1%, 0.125W, 0805	1	ROHM	MCR10PZPZF1000
R18	RES, 10k ohm, 1%, 0.125W, 0805	1	ROHM	MCR10ERTF1002
R19	RES, 1.5 ohm, 5%, 2W, DIP	1	Panasonic	ERX-2SJ1R5
R20	RES, 100k ohm, 1%, 0.125W, 0805	1	ROHM	MCR10ERTF1003
R21	RES, 12k ohm, 1%, 0.125W, 0805	1	ROHM	MCR10ERTF1202
R22	RES, 1k ohm, 1%, 0.125W, 0805	1	ROHM	MCR10ERTF1001
R23	RES, 82 ohm, 1%, 0.75W, 1210	1	ROHM	MCR100PZHZF82R0
R24	RES, 1k ohm, 1%, 0.125W, 0805	1	ROHM	MCR10ERTF1001
R25	RES, 82k ohm, 1%, 0.125W, 0805	1	ROHM	MCR10ERTF8202
R26	RES, 4.7k ohm, 1%, 0.125W, 0805	1	ROHM	MCR10ERTF4701
R27	RES, 12k ohm, 1%, 0.125W, 0805	1	ROHM	MCR10ERTF1202
R28	RES, 10k ohm, 1%, 0.125W, 0805	1	ROHM	MCR10ERTF1002
R29	N.C	1	ROHM	
R30	RES, 30k ohm, 1%, 0.1W, 0603	1	ROHM	MCR03ERTF3002
R31	RES, 10 ohm, 1%, 1W, 2512	1	ROHM	MCR100JZHF10R0
R32	RES, 1k ohm, 1%, 0.125W, 0805	1	ROHM	MCR10ERTF1001

Item	Part Description	Qty	Manufacturer	Part number
D1,D2,D3,D4,D5, D6,D7,D8,D9,D10, D11,D12,D20,D21	Diode, P-N, 1000V, 1A, TH	14	Pan Jit Inc	1N4007
D13,D14	DIODE FAST REC 1KV 1A DO41	2	Taiwan Semiconductor	UF4007
D15,D16	TVS DIODE 274VC AXIAL	2	Micro Commercial Components	1.5KE200A
D17	Schottky diode 40V 1A PMDS	1	ROHM	RB160L-40TE25
D18	Super fast diode 200V 0.5A TUMD2M	1	ROHM	RF05VAM2STR
D19	Diode 90V 0.1A UMD2	1	ROHM	1SS355VMTE17
DN1	Schottky Diode 200V 10A ITO-220AB	1	Diodes, Inc	MBR20200CT
Csnubber1	Cerm CAP,2200pF, 2 KV, 10%, X7R, 1210	1	JOHANSON DIELECTRICS	202S41W222KV4E.
C5	AL CAP, 22uF, 35V, +/-20%, TH	1	Nichicon	UVR1V220MDD1TD
C6	AL CAP, 4.7uF, 35V, +/-20%, TH	1	Nichicon	UVR1V4R7MDD1TD
C7	Cerm CAP, 0.1uF, 35V, +/-10%, X7R, 0805	1	Murata	GRM21BR71H104JA01L
C8	Cerm CAP, 47pF, 50V, +/-5%, X7R, 0805	1	Murata	GQM2195C1H470JB01D
C10	N.C			
C11	Cerm CAP, 47pF, 50V, +/-5%, X7R, 0805	1	Murata	GQM2195C1H470JB01D
C12	Cerm CAP, 2200pF, 50V, +/-5%, X7R, 0805	1	AVX	08055C222JAT2A
C13	Cerm CAP, 47pF, 50V, +/-5%, X7R, 0805	1	Murata	GQM2195C1H470JB01D
C14	Cerm CAP, 330pF, 1KV, +/-5%, X7R, 1206	1	Yageo	225000111543
C15	Cerm CAP, 0.1uF, 50V, +/-10%, X5R, 0805	1	Taiyo Yuden	UMK212BJ104KGHT
Cout1	AL CAP 470uF 35V +/-20% RADIAL	1	HERMEI CORP., LTD	LER471M1VG16VR6
Cout2	AL CAP 470uF 35V +/-20% RADIAL	1	HERMEI CORP., LTD	LER471M1VG16VR6
Cout3	AL CAP 220uF 35V +/-20% RADIAL	1	HERMEI CORP., LTD	LER221M1VG16VR6
Cout4	Cerm CAP, 1uF, 50V, +/-10%, X5R, 0805	1	Taiyo Yuden	UMK212BJ105KG-T
U1	IC QR-flyback controller 7SOIC	1	ROHM	BD7682FJ-LB
U2	Photocoupler 5mA DIP4	1	SHARP	PC817
U3	TL431 TO-92	1	UNISONIC CO., LTD	TL431
T1	EFD-30 10pin	1	G-CHAN CO., LTD	GC-1528
L3	Inductor, Shielded core, Metal, 2.2uH 4.3A	1	Wurth Elektronik	7447462022
L4	NC	1	Wurth Elektronik	74476626
HS1	HEATSINK	1	MEICON. CO., LTD.	MI-301G-25.4
LED1	Smart LED RED 569NM	1	ROHM	SML-P11UTT86-RG
Q1	SIC MOSFET N-CH 1700V 4A TO220FP	1	ROHM	SCT2H12NY

8. Operation Wave form

	DC300V	DC600V	DC900V
0.5A	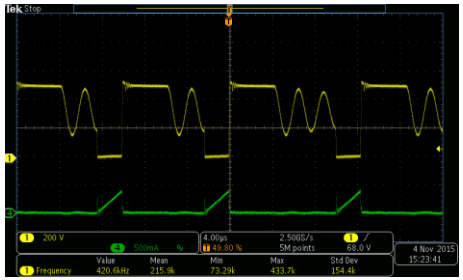	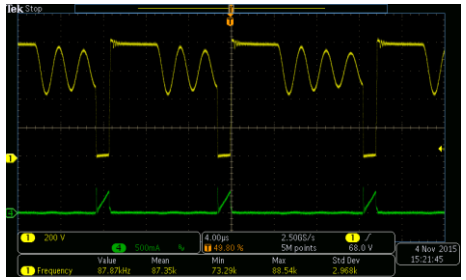	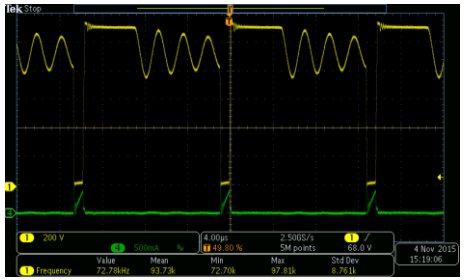
1A	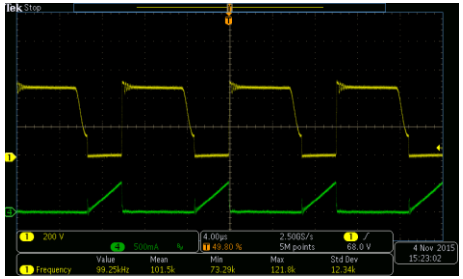	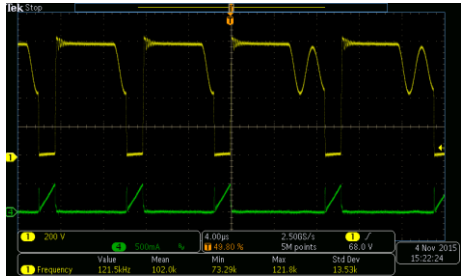	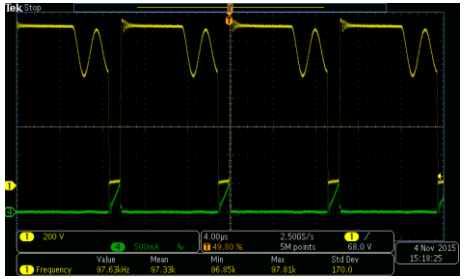

ROHM
SEMICONDUCTOR

Общество с ограниченной ответственностью «МосЧип» ИНН 7719860671 / КПП 771901001
Адрес: 105318, г.Москва, ул.Щербаковская д.3, офис 1107

Данный компонент на территории Российской Федерации

Вы можете приобрести в компании MosChip.

Для оперативного оформления запроса Вам необходимо перейти по данной ссылке:

http://moschip.ru/get-element

Вы можете разместить у нас заказ для любого Вашего проекта, будь то серийное производство или разработка единичного прибора.

В нашем ассортименте представлены ведущие мировые производители активных и пассивных электронных компонентов.

Нашей специализацией является поставка электронной компонентной базы двойного назначения, продукции таких производителей как XILINX, Intel (ex.ALTERA), Vicor, Microchip, Texas Instruments, Analog Devices, Mini-Circuits, Amphenol, Glenair.

Сотрудничество с глобальными дистрибьюторами электронных компонентов, предоставляет возможность заказывать и получать с международных складов практически любой перечень компонентов в оптимальные для Вас сроки.

На всех этапах разработки и производства наши партнеры могут получить квалифицированную поддержку опытных инженеров.

Система менеджмента качества компании отвечает требованиям в соответствии с ГОСТ Р ИСО 9001, ГОСТ РВ 0015-002 и ЭС РД 009

Офис по работе с юридическими лицами:

105318, г.Москва, ул.Щербаковская д.3, офис 1107, 1118, ДЦ «Щербаковский»

Телефон: +7 495 668-12-70 (многоканальный)

Факс: +7 495 668-12-70 (доб.304)

E-mail: info@moschip.ru

Skype отдела продаж:
moschip.ru
moschip.ru_4
moschip.ru_6
moschip.ru_9