Si4710/11-B30 FM RADIO TRANSMITTER

Features

- Integrated receive power measurement
- Worldwide FM band support (76–108 MHz)
- Requires only two external components
- Frequency synthesizer with integrated VCO
- Digital stereo modulator
- Programmable pre-emphasis
- Analog/digital audio interface
- Audio silence detector
- Programmable reference clock
- RDS/RBDS encoder (Si4711 only)
- PCB loop and stub antenna support with self-calibrated capacitor tuning
- Programmable transmit level
- Audio dynamic range control
- Advanced modulation control
- 2.7 to 5.5 V supply voltage
- Integrated LDO regulator
- 3 x 3 x 0.55 mm 20-pin QFN
  - Pb-free and RoHS Compliant
- Designed for compatibility with cellular operation

Applications

- Cellular handsets/hands-free
- MP3 players
- Portable media players
- Wireless speakers/microphone
- Satellite digital audio radios
- Personal computers/notebooks

Description

The Si4710/11 integrates the complete transmit functions for standards-compliant unlicensed FM broadcast stereo transmission. Users must comply with local regulations on radio frequency (RF) transmission.

Functional Block Diagram

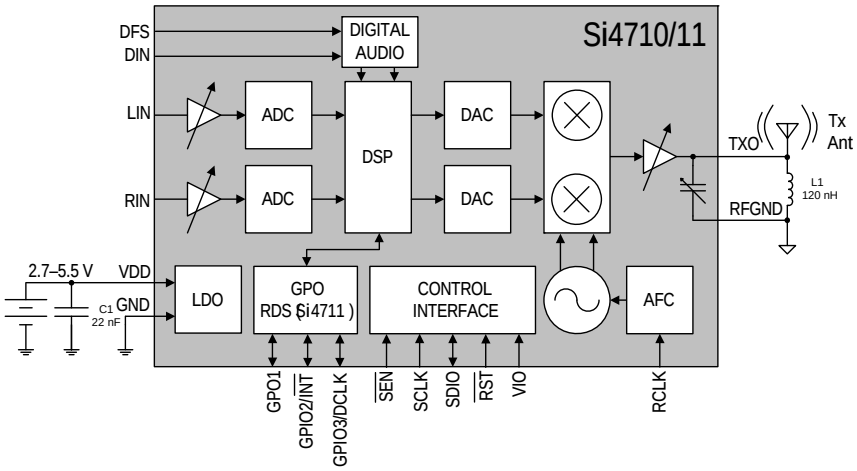

Ordering Information:

See page 32.

Pin Assignments

Si4710/11

(Top View)

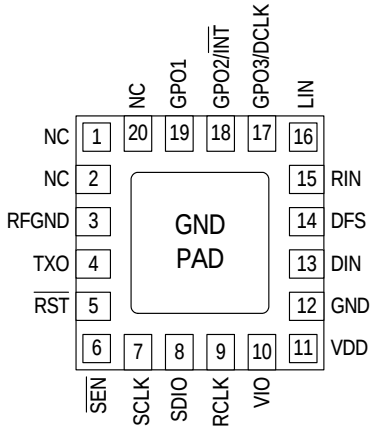

Patents pending

Note: To ensure proper operation and performance, follow the guidelines in "AN383: Universal Antenna Selection and Layout Guidelines." Silicon Laboratories will evaluate schematics and layouts for qualified customers.

Copyright © 2008 by Silicon Laboratories

TABLE OF CONTENTS

Section **Page**

1. Electrical Specifications 4
2. Test Circuit 14
2.1. Test Circuit Schematic 14
2.2. Test Circuit Bill of Materials 14
3. Typical Application Schematics 15
3.1. Analog Audio Inputs 15
3.2. Digital Audio Inputs 16
3.3. Typical Application Schematic Bill of Materials 16
4. Universal AM/FM RX/FM TX Application Schematic 17
4.1. Universal AM/FM RX/FM TX Bill of Materials 18
5. Functional Description 19
5.1. Overview 19
5.2. FM Transmitter 20
5.3. Digital Audio Interface 21
5.4. Line Input 23
5.5. Audio Dynamic Range Control 24
5.6. Audio Limiter 24
5.7. Pre-Emphasis and De-Emphasis 25
5.8. RDS/RBDS Processor (Si4711 Only) 25
5.9. Tuning 25
5.10. Reference Clock 25
5.11. Control Interface 25
5.12. GPO Outputs 27
5.13. Reset, Powerup, and Powerdown 27
5.14. Programming with Commands 27
6. Commands and Properties 28
7. Pin Descriptions: Si4710/11-GM 31
8. Ordering Guide 32
9. Package Markings (Top Marks) 33
9.1. Si4710 Top Mark 33
9.2. Si4711 Top Mark 33
9.3. Top Mark Explanation 33
10. Package Outline: Si4710/11-GM 34
11. PCB Land Pattern: Si4710/11-GM 35
12. Additional Reference Resources 37
Document Change List 39
Contact Information 40

1. Electrical Specifications

Table 1. Recommended Operating Conditions

Parameter	Symbol	Test Condition	Min	Typ	Max	Unit
Supply Voltage	V_{DD}		2.7	—	5.5	V
Interface Supply Voltage	V_{IO}		1.5	—	3.6	V
Power Supply Powerup Rise Time	V_{DDRISE}		10	—	—	µs
Interface Supply Powerup Rise Time	V_{IORISE}		10	—	—	µs
Ambient Temperature	T_A		–20	25	85	°C

Note: All minimum and maximum specifications are guaranteed and apply across the recommended operating conditions. Typical values apply at V_{DD} = 3.3 V and 25 °C unless otherwise stated. Parameters are tested in production unless otherwise stated.

Table 2. Absolute Maximum Ratings[1,2]

Parameter	Symbol	Value	Unit
Supply Voltage	V_{DD}	–0.5 to 5.8	V
Interface Supply Voltage	V_{IO}	–0.5 to 3.9	V
Input Current[3]	I_{IN}	10	mA
Input Voltage[3]	V_{IN}	–0.3 to (V_{IO} + 0.3)	V
Operating Temperature	T_{OP}	–40 to 95	°C
Storage Temperature	T_{STG}	–55 to 150	°C
RF Input Level[4]		0.4	V_{PK}

Notes:
1. Permanent device damage may occur if the absolute maximum ratings are exceeded. Functional operation should be restricted to the conditions as specified in the operational sections of this data sheet. Exposure beyond recommended operating conditions for extended periods may affect device reliability.
2. The Si4710/11 devices are high-performance RF integrated circuits with certain pins having an ESD rating of < 2 kV HBM. Handling and assembly of these devices should only be done at ESD-protected workstations.
3. For input pins SCLK, SEN, SDIO, RST, RCLK, DCLK, DFS, DIN, GPO1, GPO2/$\overline{\text{INT}}$, and GPO3.
4. At RF input pin, TXO.

Table 3. DC Characteristics

Test conditions: V_{RF} = 118 dBµV, stereo, Δf = 68.25 kHz, Δfpilot = 6.75 kHz, REFCLK = 32.768 kHz, unless otherwise specified.
Production test conditions: V_{DD} = 3.3 V, V_{IO} = 3.3 V, T_A = 25 °C, F_{RF} = 98 MHz.
Characterization test conditions: V_{DD} = 2.7 to 5.5 V, V_{IO} = 1.5 to 3.6 V, T_A = –20 to 85 °C, F_{RF} = 76–108 MHz.

Parameter	Symbol	Test Condition	Min	Typ	Max	Unit
FM Transmitter from Line Input						
TX Supply Current	I_{TX}		—	18.8	22.8	mA
TX Interface Supply Current	I_{IO}		—	320	600	µA
FM Transmitter from Digital Audio Input						
TX Supply Current	I_{DTX}	DCLK = 3.072 MHz	—	18.3	—	mA
TX Interface Supply Current	I_{DIO}	DCLK = 3.072 MHz	—	320	—	µA
Supplies and Interface						
V_{DD} Powerdown Current	I_{DD}	Powerdown mode	—	10	20	µA
V_{IO} Interface Powerdown Current	I_{IO}	SCLK, RCLK inactive Powerdown mode	—	3	10	µA
High Level Input Voltage[1]	V_{IH}		0.7 x V_{IO}	—	V_{IO} + 0.3	V
Low Level Input Voltage[1]	V_{IL}		–0.3	—	0.3 x V_{IO}	V
High Level Input Current[1]	I_{IH}	V_{IN} = V_{IO} = 3.6 V	–10	—	10	µA
Low Level Input Current[1]	I_{IL}	V_{IN} = 0 V, V_{IO} = 3.6 V	–10	—	10	µA
High Level Output Voltage[2]	V_{OH}	I_{OUT} = 500 µA	0.8 x V_{IO}	—	—	V
Low Level Output Voltage[2]	V_{OL}	I_{OUT} = –500 µA	—	—	0.2 x V_{IO}	V

Notes:
1. For input pins SCLK, SEN, SDIO, RST, RCLK, DCLK, DFS, DIN, GPO1, GPO2/$\overline{\text{INT}}$, and GPO3.
2. For output pins SDIO, GPO1, GPO2/$\overline{\text{INT}}$, and GPO3.

Table 4. Reset Timing Characteristics[1,2,3]
(V_{DD} = 2.7 to 5.5 V, V_{IO} = 1.5 to 3.6 V, T_A = –20 to 85 °C)

Parameter	Symbol	Min	Typ	Max	Unit
$\overline{RST}$ Pulse Width and GPO1, GPO2/$\overline{INT}$ Setup to $\overline{RST}$↑[4]	t_{SRST}	100	—	—	µs
GPO1, GPO2/$\overline{INT}$ Hold from $\overline{RST}$↑	t_{HRST}	30	—	—	ns

Important Notes:
1. When selecting 2-wire mode, the user must ensure that a 2-wire start condition (falling edge of SDIO while SCLK is high) does not occur within 300 ns before the rising edge of $\overline{RST}$.
2. When selecting 2-wire mode, the user must ensure that SCLK is high during the rising edge of $\overline{RST}$, and stays high until after the 1st start condition.
3. When selecting 3-wire or SPI modes, the user must ensure that a rising edge of SCLK does not occur within 300 ns before the rising edge of $\overline{RST}$.
4. If GPO1 and GPO2 are actively driven by the user, then minimum t_{SRST} is only 30 ns. If GPO1 or GPO2 is hi-Z, then minimum t_{SRST} is 100 µs, to provide time for on-chip 1 MΩ devices (active while $\overline{RST}$ is low) to pull GPO1 high and GPO2 low.

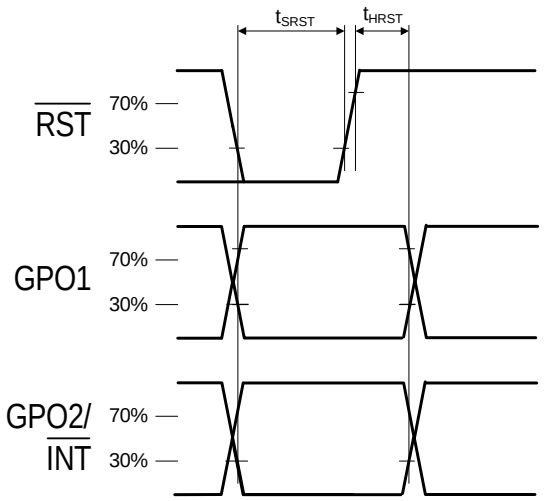

Figure 1. Reset Timing Parameters for Busmode Select

Table 5. 2-Wire Control Interface Characteristics[1,2,3]
(V_{DD} = 2.7 to 5.5 V, V_{IO} = 1.5 to 3.6 V, T_A = –20 to 85 °C)

Parameter	Symbol	Test Condition	Min	Typ	Max	Unit
SCLK Frequency	f_{SCL}		0	—	400	kHz
SCLK Low Time	t_{LOW}		1.3	—	—	µs
SCLK High Time	t_{HIGH}		0.6	—	—	µs
SCLK Input to SDIO↓ Setup (START)	$t_{SU:STA}$		0.6	—	—	µs
SCLK Input to SDIO↓ Hold (START)	$t_{HD:STA}$		0.6	—	—	µs
SDIO Input to SCLK↑ Setup	$t_{SU:DAT}$		100	—	—	ns
SDIO Input to SCLK↓ Hold[4,5]	$t_{HD:DAT}$		0	—	900	ns
SCLK input to SDIO↑ Setup (STOP)	$t_{SU:STO}$		0.6	—	—	µs
STOP to START Time	t_{BUF}		1.3	—	—	µs
SDIO Output Fall Time	$t_{f:OUT}$		$20 + 0.1\frac{C_b}{1\ pF}$	—	250	ns
SDIO Input, SCLK Rise/Fall Time	$t_{f:IN}$ $t_{r:IN}$		$20 + 0.1\frac{C_b}{1\ pF}$	—	300	ns
SCLK, SDIO Capacitive Loading	C_b		—	—	50	pF
Input Filter Pulse Suppression	t_{SP}		—	—	50	ns

Notes:
1. When V_{IO} = 0 V, SCLK and SDIO are low-impedance. 2-wire control interface is I^2C compatible.
2. When selecting 2-wire mode, the user must ensure that a 2-wire start condition (falling edge of SDIO while SCLK is high) does not occur within 300 ns before the rising edge of $\overline{RST}$.
3. When selecting 2-wire mode, the user must ensure that SCLK is high during the rising edge of $\overline{RST}$, and stays high until after the first start condition.
4. The Si4710/11 delays SDIO by a minimum of 300 ns from the V_{IH} threshold of SCLK to comply with the minimum t
5. $_{HD:DAT}$ specification.
6. The maximum $t_{HD:DAT}$ has only to be met when f_{SCL} = 400 kHz. At frequencies below 400 KHz, $t_{HD:DAT}$ may be violated as long as all other timing parameters are met.

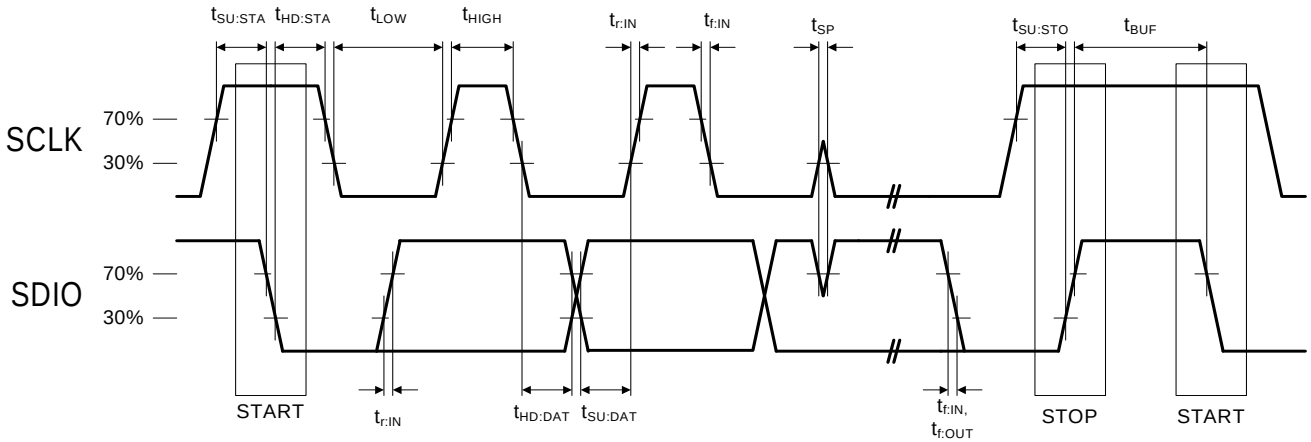

Figure 2. 2-Wire Control Interface Read and Write Timing Parameters

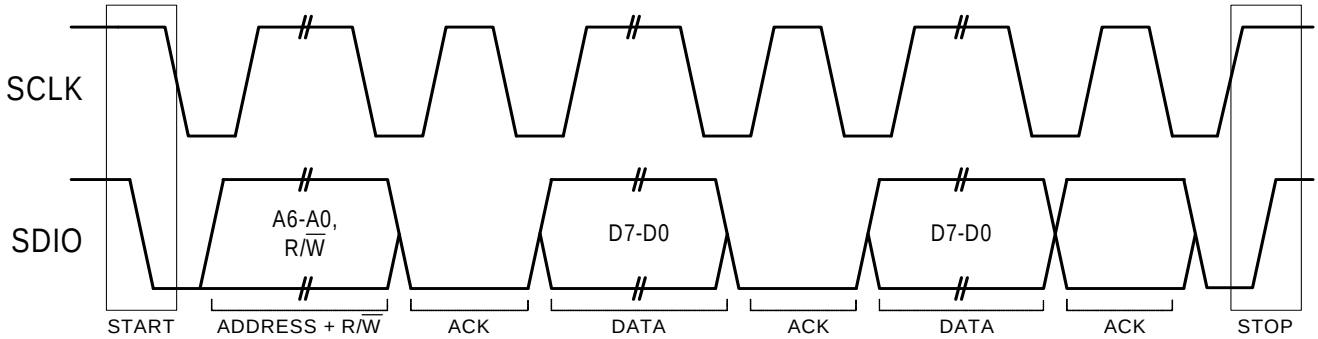

Figure 3. 2-Wire Control Interface Read and Write Timing Diagram

Table 6. 3-Wire Control Interface Characteristics
(V_{DD} = 2.7 to 5.5 V, V_{IO} = 1.5 to 3.6 V, T_A = –20 to 85 °C)

Parameter	Symbol	Test Condition	Min	Typ	Max	Unit
SCLK Frequency	f_{CLK}		0	—	2.5	MHz
SCLK High Time	t_{HIGH}		25	—	—	ns
SCLK Low Time	t_{LOW}		25	—	—	ns
SDIO Input, $\overline{SEN}$ to SCLK↑ Setup	t_S		20	—	—	ns
SDIO Input to SCLK↑ Hold	t_{HSDIO}		10	—	—	ns
$\overline{SEN}$ Input to SCLK↓ Hold	t_{HSEN}		10	—	—	ns
SCLK↑ to SDIO Output Valid	t_{CDV}	Read	2	—	25	ns
SCLK↑ to SDIO Output High Z	t_{CDZ}	Read	2	—	25	ns
SCLK, $\overline{SEN}$, SDIO, Rise/Fall time	t_R t_F		—	—	10	ns
Note: When selecting 3-wire mode, the user must ensure that a rising edge of SCLK does not occur within 300 ns before the rising edge of $\overline{RST}$.						

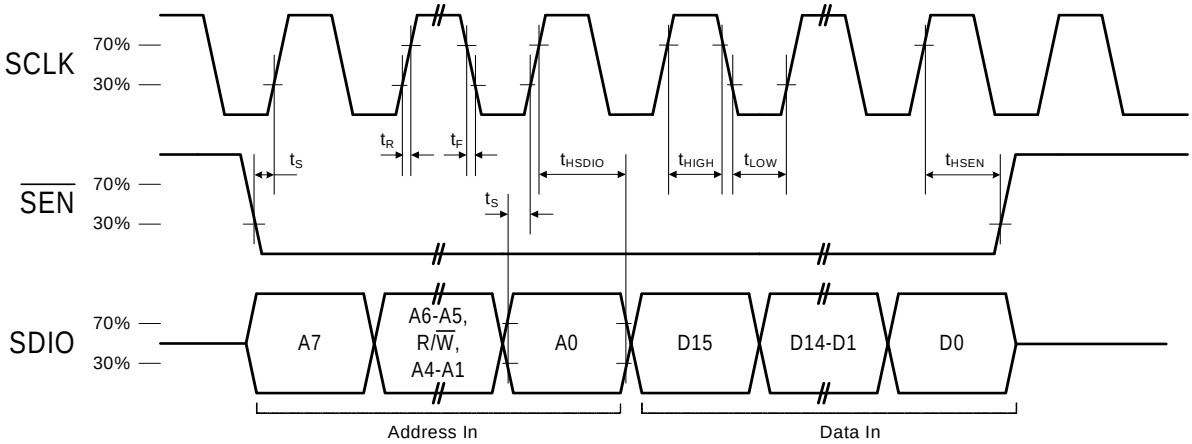

Figure 4. 3-Wire Control Interface Write Timing Parameters

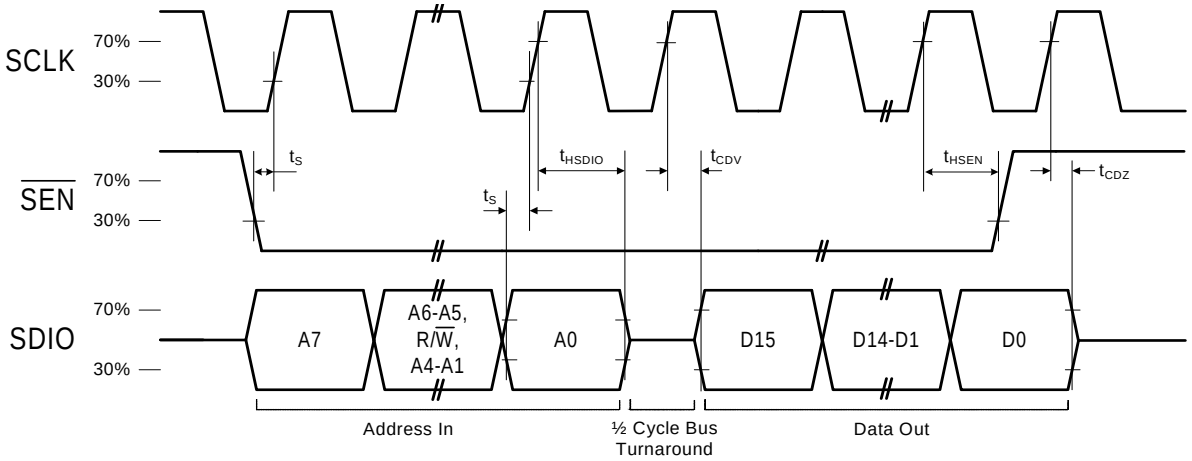

Figure 5. 3-Wire Control Interface Read Timing Parameters

Table 7. SPI Control Interface Characteristics
(V_{DD} = 2.7 to 5.5 V, V_{IO} = 1.5 to 3.6 V, T_A = –20 to 85 °C)

Parameter	Symbol	Test Condition	Min	Typ	Max	Unit
SCLK Frequency	f_{CLK}		0	—	2.5	MHz
SCLK High Time	t_{HIGH}		25	—	—	ns
SCLK Low Time	t_{LOW}		25	—	—	ns
SDIO Input, $\overline{SEN}$ to SCLK↑ Setup	t_S		15	—	—	ns
SDIO Input to SCLK↑ Hold	t_{HSDIO}		10	—	—	ns
$\overline{SEN}$ Input to SCLK↓ Hold	t_{HSEN}		5	—	—	ns
SCLK↓ to SDIO Output Valid	t_{CDV}	Read	2	—	25	ns
SCLK↓ to SDIO Output High Z	t_{CDZ}	Read	2	—	25	ns
SCLK, $\overline{SEN}$, SDIO, Rise/Fall time	t_R, t_F		—	—	10	ns
Note: When selecting SPI mode, the user must ensure that a rising edge of SCLK does not occur within 300 ns before the rising edge of $\overline{RST}$.						

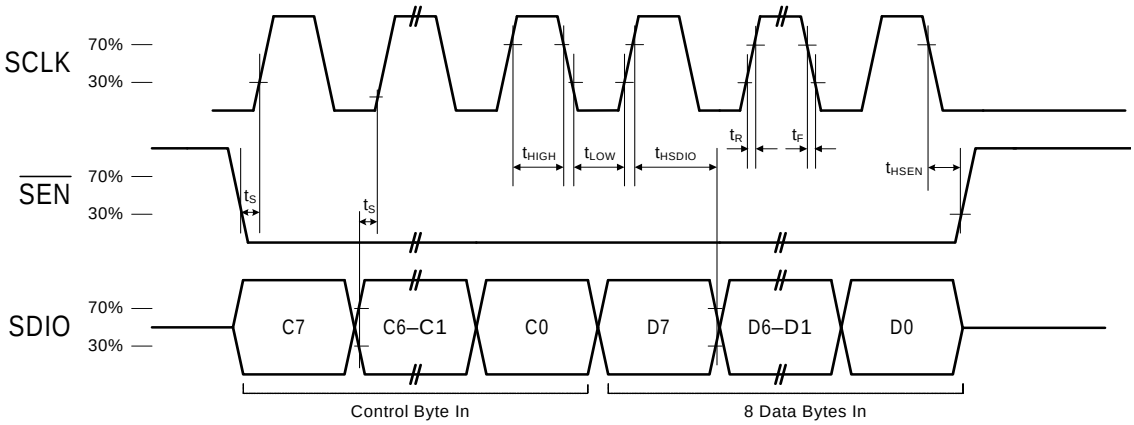

Figure 6. SPI Control Interface Write Timing Parameters

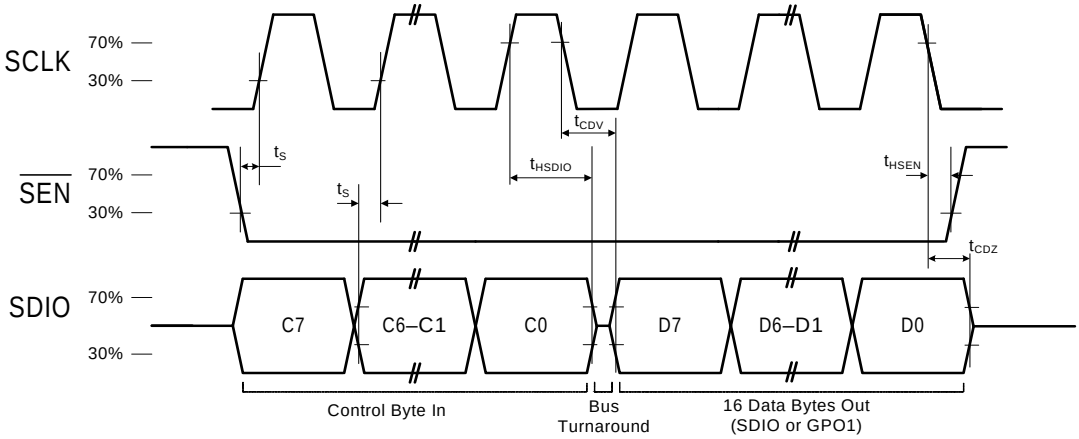

Figure 7. SPI Control Interface Read Timing Parameters

Table 8. Digital Audio Interface Characteristics
(V_{DD} = 2.7 to 5.5 V, V_{IO} = 1.5 to 3.6 V, T_A = –20 to 85 °C)

Parameter	Symbol	Test Condition	Min	Typ	Max	Unit
DCLK pulse width high	t_{DCH}		10	—	—	ns
DCLK pulse width low	t_{DCL}		10	—	—	ns
DFS set-up time to DCLK rising edge	$t_{SU:DFS}$		5	—	—	ns
DFS hold time from DCLK rising edge	$t_{HD:DFS}$		5	—	—	ns
DIN set-up time from DCLK rising edge	$t_{SU:DIN}$		5	—	—	ns
DIN hold time from DCLK rising edge	$t_{HD:DIN}$		5	—	—	ns
DCLK, DFS, DIN, Rise/Fall time	t_R t_F		—	—	10	ns
DCLK Tx Frequency[1,2]			1.0	—	40.0	MHz

Notes:
1. Guaranteed by characterization.
2. The DCLK frequency may be set below the minimum specification if DIGITAL_INPUT_SAMPLE_RATE is first set to 0 (disable).

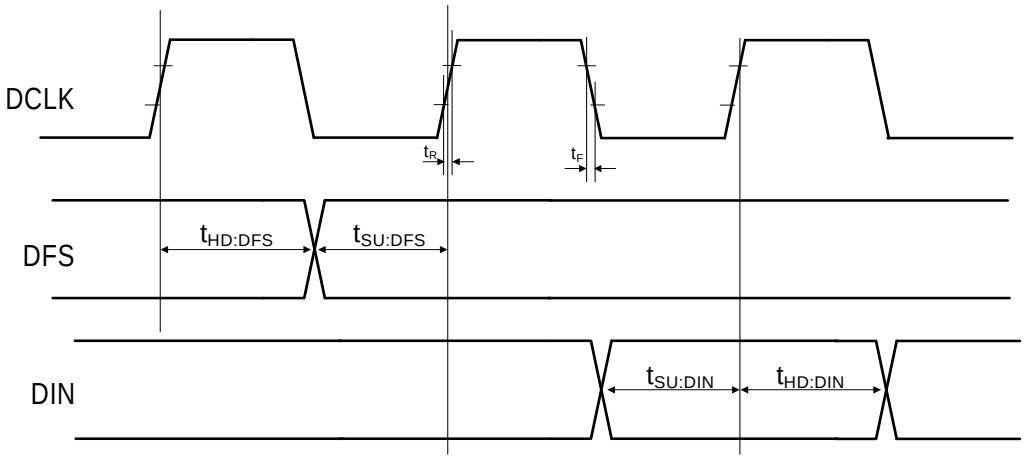

Figure 8. Digital Audio Interface Timing Parameters, I²S Mode

Table 9. FM Transmitter Characteristics[1]

(Test conditions: V_{RF} = 118 dBµV, stereo, Δf = 68.25 kHz, Δfpilot = 6.75 kHz, REFCLK = 32.768 kHz, 75 µs pre-emphasis, unless otherwise specified.
Production test conditions: V_{DD} = 3.3 V, V_{IO} = 3.3 V, T_A = 25 °C, F_{RF} = 98 MHz.
Characterization test conditions: V_{DD} = 2.7 to 5.5 V, V_{IO} = 1.5 to 3.6 V, T_A = –20 to 85 °C, F_{RF} = 76–108 MHz.
All minimum and maximum specifications are guaranteed and apply across the recommended operating conditions.
Typical values apply at V_{DD} = 3.3 V and 25 °C unless otherwise stated.
Parameters are tested in production unless otherwise specified.)

Parameter	Symbol	Test Condition	Min	Typ	Max	Unit
Transmit Frequency Range[2]	f_{RF}		76	—	108	MHz
Transmit Frequency Accuracy and Stability[2,3]			–3.5	—	3.5	kHz
Transmit Voltage Accuracy[2]		V_{RF} = 103–117 dBµV	–2.5	—	2.5	dB
Transmit Voltage Accuracy		V_{RF} = 102, 118 dBµV	–2.5	—	2.5	dB
Transmit Voltage Temperature Coefficient[2]			–0.075	—	–0.025	dB/ºC
Transmit Channel Edge Power		> ±100 kHz, pre-emphasis off	—	—	–20	dBc
Transmit Adjacent Channel Power		> ±200 kHz, pre-emphasis off	—	–30	–26	dBc
Transmit Alternate Channel Power		> ±400 kHz, pre-emphasis off	—	–30	–26	dBc
Transmit Emissions		In-band (76–108 MHz)	—	—	–30	dBc
Output Capacitance Max[2]	C_{tune}		—	53	—	pF
Output Capacitance Min[2]	C_{tune}		—	5	—	pF
Pre-emphasis Time Constant[2]		TX_PREMPHASIS = 75 µs	70	75	80	µs
		TX_PREMPHASIS = 50 µs	45	50	54	µs
Audio SNR Mono[2]		Δf = 22.5 kHz, Mono, limiter off	58	63	—	dB
Audio SNR Stereo		Δf = 22.5 kHz, Δfpilot = 6.75 kHz, Stereo, limiter off	53	58	—	dB
Audio THD Mono		Δf = 75 kHz, Mono, limiter off	—	0.1	0.5	%
Audio THD Stereo[2]		Δf = 22.5 kHz, Δfpilot = 6.75 kHz, Stereo, limiter off	—	0.1	0.5	%
Audio Stereo Separation[2]		left channel only	30	35	—	dB

Notes:
1. FM transmitter performance specifications are subject to adherence to Silicon Laboratories guidelines in "AN383: Universal Antenna Selection and Layout Guidelines." Silicon Laboratories will evaluate schematics and layouts for qualified customers. Tested with test schematic (L = 120 nH, Q ≥ 30) shown in Figure 9 on page 14.
2. Guaranteed by characterization.
3. No measurable $\Delta fRF/\Delta V_{DD}$ at ΔV_{DD} of 500 mVpk-pk at 100 Hz to 10 kHz.

Table 9. FM Transmitter Characteristics[1] (Continued)

(Test conditions: V_{RF} = 118 dBµV, stereo, Δf = 68.25 kHz, Δfpilot = 6.75 kHz, REFCLK = 32.768 kHz, 75 µs pre-emphasis, unless otherwise specified.
Production test conditions: V_{DD} = 3.3 V, V_{IO} = 3.3 V, T_A = 25 °C, F_{RF} = 98 MHz.
Characterization test conditions: V_{DD} = 2.7 to 5.5 V, V_{IO} = 1.5 to 3.6 V, T_A = –20 to 85 °C, F_{RF} = 76–108 MHz.
All minimum and maximum specifications are guaranteed and apply across the recommended operating conditions.
Typical values apply at V_{DD} = 3.3 V and 25 °C unless otherwise stated.
Parameters are tested in production unless otherwise specified.)

Parameter	Symbol	Test Condition	Min	Typ	Max	Unit
Sub Carrier Rejection Ratio	SCR		40	50	—	dB
Powerup Settling Time[2]			—	—	110	ms
Input Signal Level[2]	V_{AI}		—	—	0.636	V_{PK}
Frequency Flatness[2]		Mono, ±1.5 dB, Δf = 75 kHz, 0, 50, 75 µs pre-emphasis, limiter off	30	—	15 k	Hz
High Pass Corner Frequency[2]		Mono, –3 dB, Δf = 75 kHz, 0, 50, 75 µs pre-emphasis, limiter off	5	—	30	Hz
Low Pass Corner Frequency[2]		Mono, –3 dB, Δf = 75 kHz, 0, 50, 75 µs pre-emphasis, limiter off	15 k	—	16 k	Hz
Audio Imbalance		Mono	–1	—	1	dB
Pilot Modulation Rate Accuracy[2]		Δf = 68.25 kHz, Δfpilot = 6.75 kHz, Stereo	–10	—	10	%
Audio Modulation Rate Accuracy[2]		Δf = 68.25 kHz, Δfpilot = 6.75 kHz, Stereo	–10	—	10	%
Input Resistance[2]		LIATTEN[1:0] = 11	50	60	—	kΩ
Input Capacitance[2]			—	10	—	pF

Notes:
1. FM transmitter performance specifications are subject to adherence to Silicon Laboratories guidelines in “AN383: Universal Antenna Selection and Layout Guidelines.” Silicon Laboratories will evaluate schematics and layouts for qualified customers. Tested with test schematic (L = 120 nH, Q ≥ 30) shown in Figure 9 on page 14.
2. Guaranteed by characterization.
3. No measurable $\Delta fRF/\Delta V_{DD}$ at ΔV_{DD} of 500 mVpk-pk at 100 Hz to 10 kHz.

Table 10. Reference Clock Characteristics

(V_{DD} = 2.7 to 5.5 V, V_{IO} = 1.5 to 3.6 V, T_A = –20 to 85 °C, F_{RF} = 76–108 MHz)

Supported Parameter	Symbol	Test Condition	Min	Typ	Max	Unit
RCLK Frequency Range[1,2]			31.130	32.768	40,000	kHz
Frequency Tolerance[1]			–50	—	50	ppm

Notes:
1. Guaranteed by characterization.
2. The RCLK frequency divided by an integer number (the prescaler value) must fall in the range of 31,130 to 34,406 Hz. Therefore, the range of RCLK frequencies is not continuous below frequencies of 311.3 kHz.

2. Test Circuit

2.1. Test Circuit Schematic

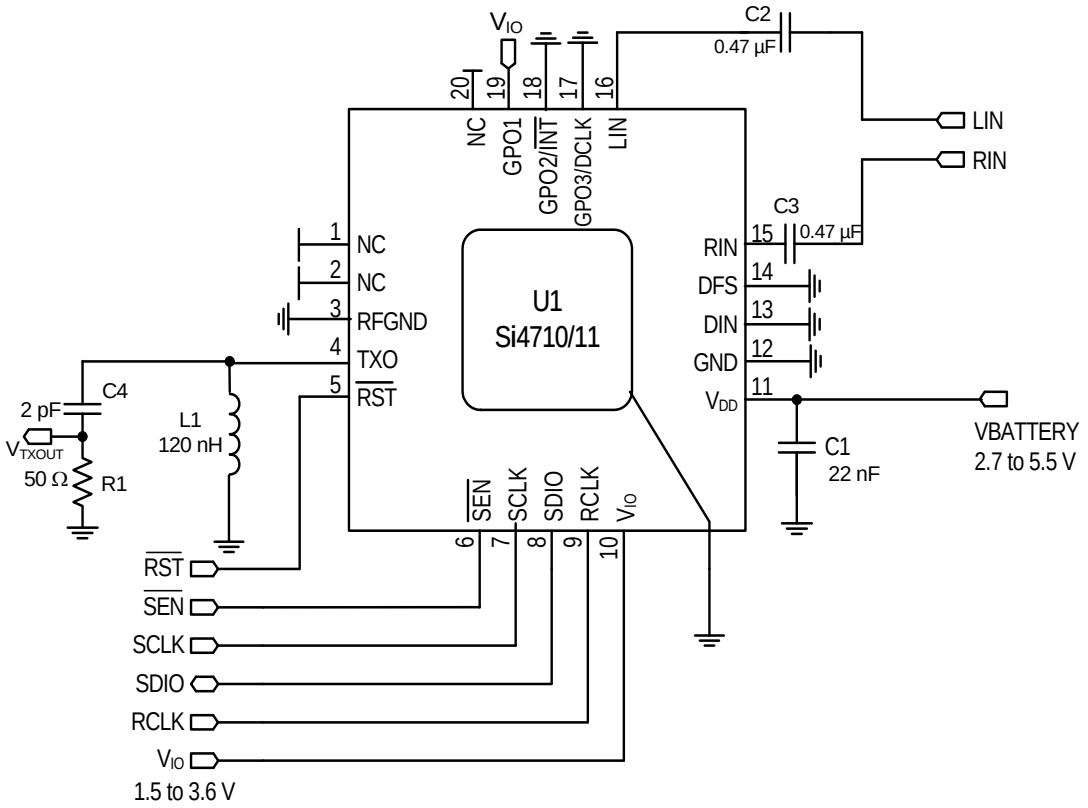

Notes:
1. Si4710/11 is shown configured in I²C compatible bus mode.
2. GPO2/INT can be configured for interrupts with the powerup command.
3. To ensure proper operation and FM transmitter performance, follow the guidelines in "AN383: 3 mm x 3 mm QFN Universal Layout Guide." Silicon Laboratories will evaluate schematics and layouts for qualified customers.
4. LIN, RIN line inputs must be ac-coupled.

Figure 9. Test Circuit Schematic

2.2. Test Circuit Bill of Materials

Table 11. Si4710/11 Test Circuit Bill of Materials

Component(s)	Value/Description	Supplier(s)
C1	Supply bypass capacitor, 22 nF, 20%, Z5U/X7R	Murata
C2, C3	AC Coupling Capacitor, 0.47 µF	Murata
C4	2 pF, ±.05 pF, 06035JZR0AB	AVX
L1	120 nH inductor, Qmin = 30	Murata
R1	49.9 Ω, 5%	Murata
U1	Si4710/11 FM Radio Transmitter	Silicon Laboratories

3. Typical Application Schematics

3.1. Analog Audio Inputs

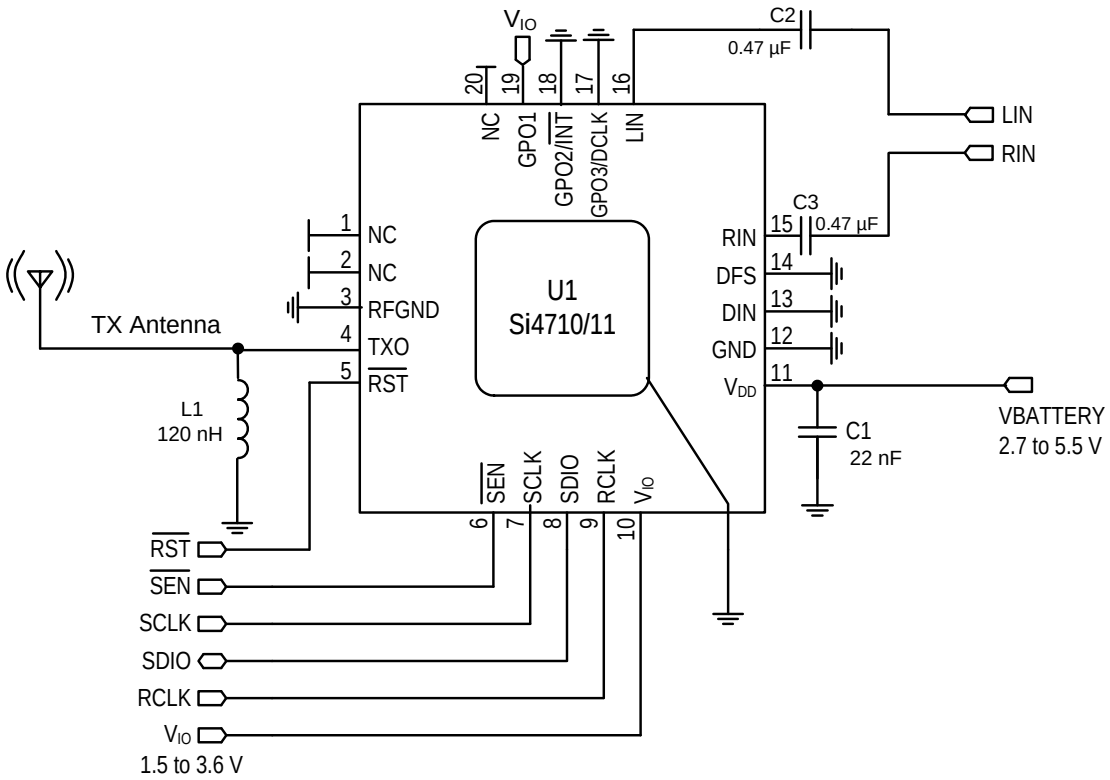

Notes:
1. Si4710/11 is shown configured in I²C compatible bus mode.
2. GPO2/INT can be configured for interrupts with the powerup command.
3. To ensure proper operation and FM transmitter performance, follow the guidelines in "AN383: 3 mm x 3 mm QFN Universal Layout Guide." Silicon Laboratories will evaluate schematics and layouts for qualified customers.
4. LIN, RIN line inputs must be ac-coupled.

Figure 10. Analog Audio Inputs (LIN, RIN)

3.2. Digital Audio Inputs

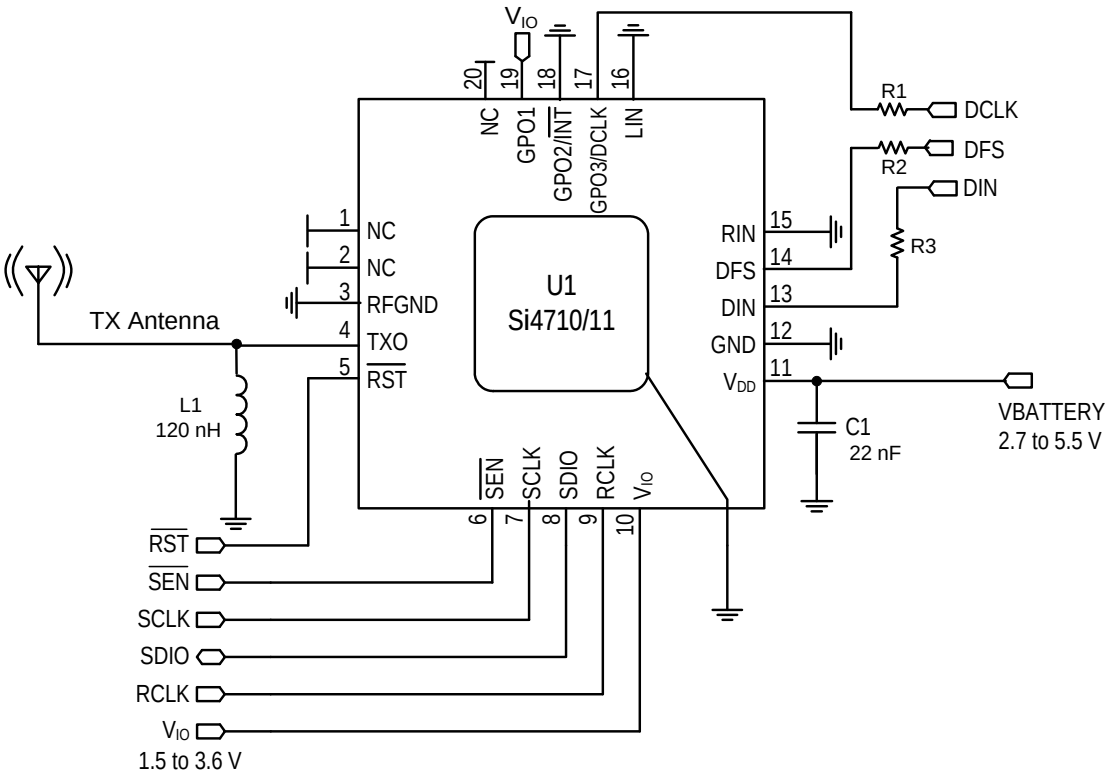

Notes:
1. Si4710/11 is shown configured in I²C compatible bus mode.
2. GPO2/INT can be configured for interrupts with the powerup command.
3. To ensure proper operation and FM transmitter performance, follow the guidelines in "AN383: Si47xx 3 mm x 3 mm QFN Universal Layout Guide." Silicon Laboratories will evaluate schematics and layouts for qualified customers.

Figure 11. Digital Audio Inputs (DIN, DFS, DCLK)

3.3. Typical Application Schematic Bill of Materials

Table 12. Si4710/11 Bill of Materials

Component(s)	Value/Description	Supplier(s)
C1	Supply bypass capacitor, 22 nF, 20%, Z5U/X7R	Murata
C2, C3	AC Coupling Capacitor, 0.47 µF	Murata
L1	120 nH inductor, Qmin = 30	Murata
R1, R2	2 kΩ Resistor	Any
R3	600 Ω Resistor	Any
U1	Si4710/11 FM Radio Transmitter	Silicon Laboratories

4. Universal AM/FM RX/FM TX Application Schematic

Figure 12 shows an application schematic that supports the Si47xx family of 3 mm x 3 mm QFN products, including the Si4702/3/4/5 FM receivers, Si471x FM transmitters, Si472x FM transceivers, and Si473x AM/FM receivers.

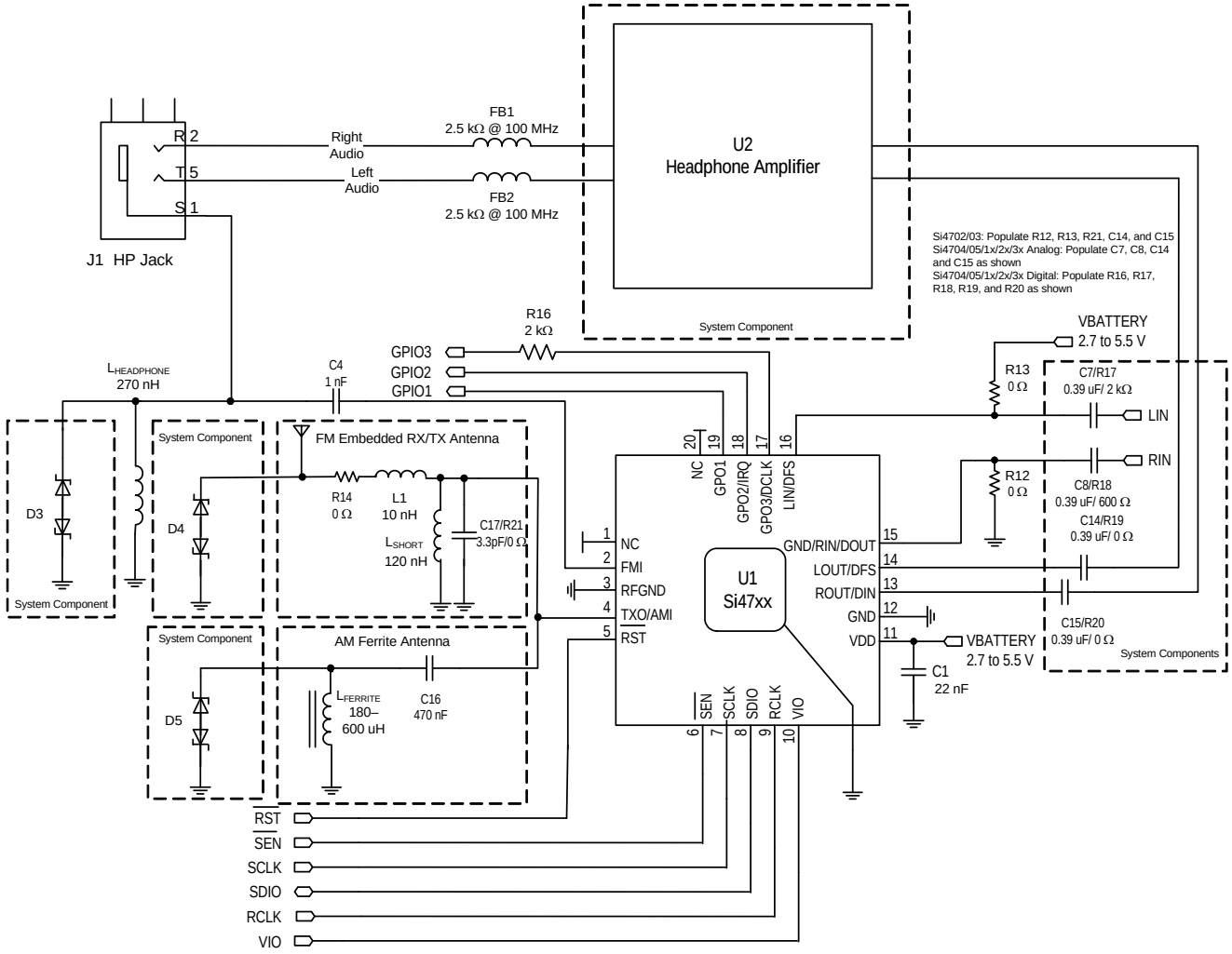

Figure 12. Universal AM/FM RX/FM TX Application Schematic

Following the schematic and layout recommendations detailed in “AN383: Universal Antenna Selection and Layout Guidelines” will result in optimal performance with the minimal application schematic shown in Figure 12. “Universal AM/FM RX/FM TX Application Schematic”. System components are those that are likely to be present for any tuner or transmitter design.

4.1. Universal AM/FM RX/FM TX Bill of Materials

The bill of materials for the expanded application schematic shown in Figure 12 is provided in Table 13. Refer to the individual device layout guides and antenna interface guides for a discussion of the purpose of each component.

Table 13. Bill of Materials

Designator	Description	Note
C1	Supply bypass capacitor, 22 nF, 10%, Z5U/X7R, 0402	
U1	Silicon Laboratories Si47xx, 3 mm x 3 mm, 20 pin, QFN	
R12, R13, R19, R20, R21	0 Ω jumper, 0402	R12, R13, and R21 for Si4702/03 Only
C16	AM antenna ac coupling capacitor, 470 nF, 20%, Z5U/X7R	AM Ferrite Antenna
LFERRITE	AM Ferrite loop stick, 180–600 µH	AM Ferrite Antenna
FB1,FB2	Ferrite bead, 2.5 kΩ @ 100 MHZ, 0603, Murata BLM18BD252SN1D	Headphone Antenna
LHEADPHONE	Headphone antenna matching inductor, 270 nH, 0603, Q>15, Murata LQW18ANR27J00D	Headphone Antenna
LSHORT	Embedded antenna matching inductor, 120 nH, 0603, Q>30, Murata LQW18ANR12J00D	Embedded Antenna
R14	Embedded antenna jumper, 2.2 Ω, 0402	Optional
C2	Supply bypass capacitor, 22 nF, 10%, Z5U/X7R, 0402	Optional
C3	Supply bypass capacitor, 100 nF, 10%, Z5U/X7R, 0402	Optional
C5, C6	Headphone amp output shunt capacitor, 100 pF, 10%, Z5U/X7R, 0402	Optional
R7-R11	Current limiting resistor, 20 Ω–2 kΩ, 0402	Optional
C12, C13	Crystal load capacitor, 22 pF, 5%, COG	Optional
X1	Crystal, Epson FC-135	Optional
C7, C8	Si47xx input ac coupling capacitor, 0.39 µF, X7R/X5R, 0402	System Component
D1-D5	ESD Diode, SOT23-3, California Micro Devices CM1214-01ST	System Component
C11	Supply bypass capacitor, 100 nF, 10%, Z5U/X7R, 0402	Headphone Amplifier
C4	Headphone antenna ac coupling capacitor, 1 nF, 10%, Z5U/X7R, 0402	Headphone Antenna
C9, C10	Headphone amp output ac coupling capacitor, 125 uF, X7R, 0805	Headphone Amplifier
C14, C15	Headphone amp input ac coupling capacitor, 0.39 µF, X7R/X5R, 0402	Headphone Amplifier
R1,R2,R3,R4	Headphone amp feedback/gain resistor, 20 kΩ, 0402	Headphone Amplifier
R5, R6	Headphone amp bleed resistor, 100 kΩ, 0402	Headphone Amplifier
U2	Headphone amplifier, National Semiconductor, LM4910MA	Headphone Amplifier
R16, R17	Current limiting resistor, 2 kΩ, 0402	System Component
R18	Current limiting resistor, 600 Ω, 0402	System Component
L1	VCO filter inductor, 10 nH, 0603, Q>30, Murata, LQW18ANR01J00D	Optional
C17	VCO filter capacitor, 3.3 pF, 0402, COG, Venkel, C0402COG2503R3JN	Optional

5. Functional Description

5.1. Overview

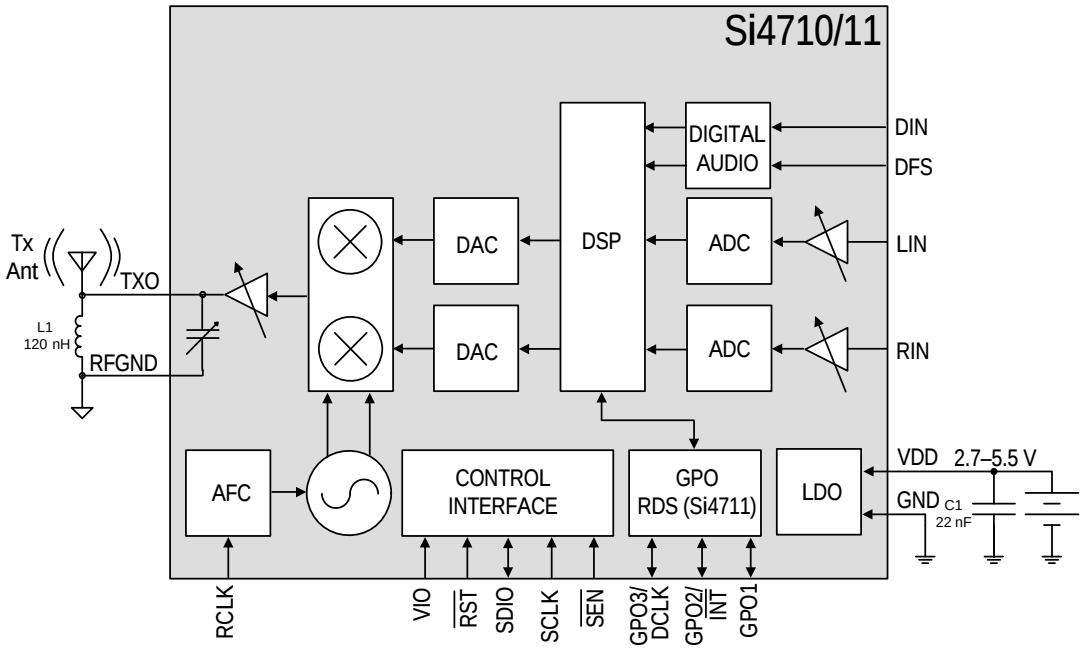

Figure 13. Functional Block Diagram

The Si4710/11 is the first 100% CMOS FM radio transmitter with integrated receive functionality to measure received signal strength. The device leverages Silicon Labs' highly successful and proven Si4700/01 FM receiver patent family and offers unmatched integration and performance, allowing FM transmit to be added to any portable device with a single chip. The Si4710/11 offers industry-leading size, performance, low power consumption, flexibility, and ease of use.

The Si4710/11's digital integration reduces the required external components of traditional offerings, resulting in a solution requiring only an external inductor and bypass capacitor, and PCB space of approximately 15 mm^2. This increases the device reliability and simplifies the design and manufacturing for companies adopting this technology.

The Si4710/11 performs FM modulation in the digital domain to achieve high fidelity, optimal performance versus power consumption, and flexibility of design. The onboard DSP provides modulation adjustment and audio dynamic range control for optimum sound quality.

The Si4711 supports the European Radio Data System (RDS) and the US Radio Broadcast Data System (RBDS) including all the symbol encoding, block synchronization, and error correction functions. Using this feature, the Si4711 enables data such as artist name and song title to be transmitted to an RDS/RBDS receiver.

The transmit output (TXO) connects directly to the transmit antenna with only one external inductor to provide harmonic filtering. The output is programmable over a 10 dB voltage range in 1 dB steps. The TXO output pin can also be configured for loop antenna support. Users are responsible for complying with local regulations on RF transmission (FCC, ETSI, ARIB, etc.).

The digital audio interface operates in slave mode and supports a variety of MSB-first audio data formats including I^2S and left-justified modes. The interface has three pins: digital data input (DIN), digital frame synchronization input (DFS), and a digital bit synchronization input clock (DCLK). The Si4710/11 supports a number of industry-standard sampling rates including 32, 40, 44.1, and 48 kHz. The digital audio interface enables low-power operation by eliminating the need for redundant DACs and ADCs on the audio baseband processor.

The Si4710/11 includes a low-noise stereo line input

(LIN/RIN) with programmable attenuation. To ensure optimal audio performance, the Si4710/11 has a transmit line input property that allows the user to specify the peak amplitude of the analog input required to reach maximum deviation level. The deviation levels of the audio, pilot, and RDS/RBDS signals can be independently programmed to customize FM transmitter designs. The Si4710/11 has a programmable low audio level and high audio level indicators that allows the user to selectively enable and disable the carrier based on the presence of audio content. In addition, the device provides an overmodulation indicator to allow the user to dynamically set the maximum deviation level. The Si4710/11 has a programmable audio dynamic range control that can be used to reduce the dynamic range of the audio input signal and increase the volume at the receiver. These features can dramatically improve the end user's listening experience.

The Si4710/11 is reset by applying a logic low on the RST pin. This causes all register values to be reset to their default values. The digital input/output interface supply (V_{IO}) provides voltage to the RST, SEN, SDIO, RCLK, DIN, DFS, and DCLK pins and can be connected to the audio baseband processor's supply voltage to save power and remove the need for voltage level translators. RCLK is not required for register operation.

The Si4710/11 reference clock is programmable, supporting many RCLK inputs as shown in Table 9.

The Si4710/11 are part of a family of broadcast audio solutions offered in standard, 3 x 3 mm 20-pin QFN packages. All solutions are layout compatible, allowing a single PCB to accommodate various feature offerings.

The Si4710/11 includes line inputs to the on-chip analog-to-digital converters (ADC), a programmable reference clock input, and a configurable digital audio interface. The chip supports I^2C-compliant 2-wire, 8-bit SPI, and a 3-wire control interface.

5.2. FM Transmitter

The transmitter (TX) integrates a stereo audio ADC to convert analog audio signals to high fidelity digital signals. Alternatively, digital audio signals can be applied to the Si4710/11 directly to reduce power consumption by eliminating the need to convert audio baseband signals to analog and back again to digital. Digital signal processing is used to perform the stereo MPX encoding and FM modulation to a low digital IF. Transmit baseband filters suppress out-of-channel noise and images from the digital low-IF signal. A quadrature single-sideband mixer up-converts the digital IF signal to RF, and internal RF filters suppress noise and harmonics to support the harmonic emission requirements of cellular phones, GPS, WLAN, and other wireless standards.

The TXO output has over 10 dB of output level control, programmable in approximately 1 dB steps. This large output range enables a variety of antennas to be used for transmit, such as a monopole stub antenna or a loop antenna. The 1 dB step size provides fine adjustment of the output voltage.

The TXO output requires only one external 120 nH inductor. The inductor is used to resonate the antenna and is automatically calibrated within the integrated circuit to provide the optimum output level and frequency response for supported transmit frequencies. Users are responsible for adjusting their system's radiated power levels to comply with local regulations on RF transmission (FCC, ETSI, ARIB, etc.).

5.3. Digital Audio Interface

The digital audio interface operates in slave mode and supports 3 different audio data formats:

1. I^2S
2. Left-Justified
3. DSP Mode

5.3.1. Audio Data Formats

In I^2S mode, the MSB is captured on the second rising edge of DCLK following each DFS transition. The remaining bits of the word are sent in order, down to the LSB. The Left Channel is transferred first when the DFS is low, and the Right Channel is transferred when the DFS is high.

In Left-Justified mode, the MSB is captured on the first rising edge of DCLK following each DFS transition. The remaining bits of the word are sent in order, down to the LSB. The Left Channel is transferred first when the DFS is high, and the Right Channel is transferred when the DFS is low.

In DSP mode, the DFS becomes a pulse with a width of 1 DCLK period. The Left Channel is transferred first, followed right away by the Right Channel. There are two options in transferring the digital audio data in DSP mode: the MSB of the left channel can be transferred on the first rising edge of DCLK following the DFS pulse or on the second rising edge.

In all audio formats, depending on the word size, DCLK frequency and sample rates, there may be unused DCLK cycles after the LSB of each word before the next DFS transition and MSB of the next word.

The number of audio bits can be configured for 8, 16, 20, or 24 bits.

5.3.2. Audio Sample Rates

The device supports a number of industry-standard sampling rates including 32, 40, 44.1, and 48 kHz. The digital audio interface enables low-power operation by eliminating the need for redundant DACs and ADCs on the audio baseband processor. The sampling rate is selected using the DIGITAL_INPUT_SAMPLE_RATE property.

The device supports DCLK frequencies above 1 MHz. After powerup the DIGITAL_INPUT_SAMPLE_RATE property defaults to 0 (disabled). After DCLK is supplied, the DIGITAL_INPUT_SAMPLE_RATE property should be set to the desired audio sample rate such as 32, 40, 44.1, or 48 kHz. The DIGITAL_INPUT_SAMPLE_RATE property must be set to 0 before DCLK is removed or the DCLK frequency drops below 1 MHz. A device reset is required if this requirement is not followed.

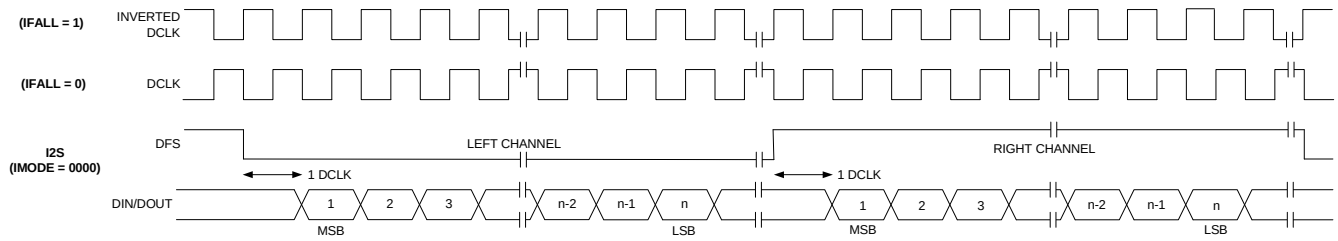

Figure 14. I^{2}S Digital Audio Format

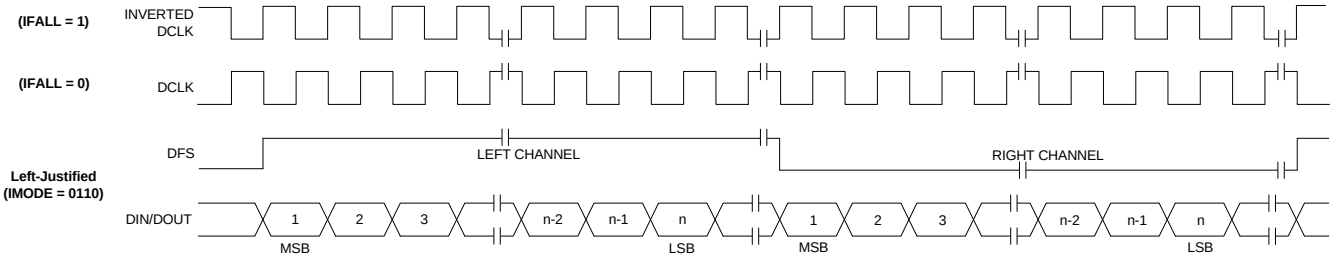

Figure 15. Left-Justified Digital Audio Format

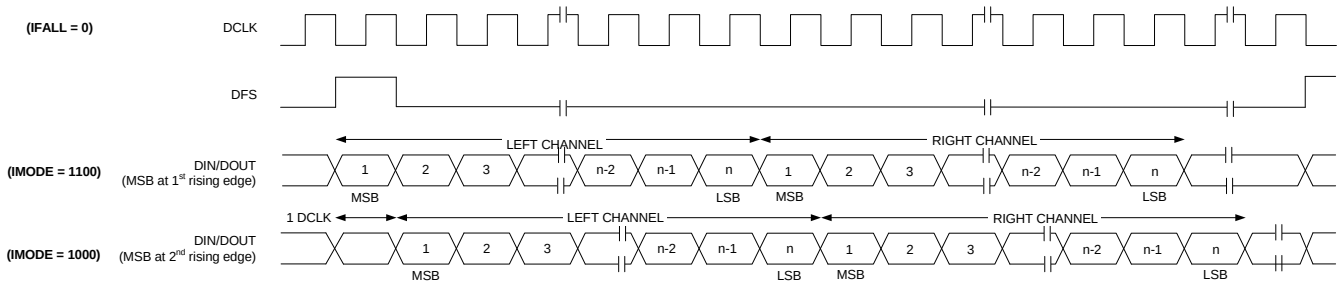

Figure 16. DSP Digital Audio Format

5.4. Line Input

The Si4710/11 provides left and right channel line inputs (LIN and RIN). The inputs are high-impedance and low-capacitance, suited to receiving line level signals from external audio baseband processors. Both line inputs are low-noise inputs with programmable attenuation. Passive and active anti-aliasing filters are incorporated to prevent high frequencies from aliasing into the audio band and degrading performance.

To ensure optimal audio performance, the Si4710/11 has a TX_LINE_INPUT_LEVEL property that allows the user to specify the peak amplitude of the analog input (LILEVEL[9:0]) required to reach the maximum deviation level programmed in the audio deviation property, TX_AUDIO_DEVIATION. A corresponding line input attenuation code, LIATTEN[1:0], is also selected by the expected peak amplitude level. Table 14 shows the line attenuation codes.

Table 14. Line Attenuation Codes

LIATTEN[1:0]	Peak Input Voltage [mV]	RIN/LIN Input Resistance [kΩ]
00	190	396
01	301	100
10	416	74
11	636	60

The line attenuation code is chosen by picking the lowest Peak Input Voltage in Table 14 that is just above the expected peak input voltage coming from the audio baseband processor. For example, if the expected peak input voltage from the audio baseband processor is 400 mV, the user chooses LIATTEN[1:0] = 10 since the Peak Input Voltage of 416 mV associated with LIATTEN[1:0] = 10 is just greater than the expected peak input voltage of 400 mV. The user also enters 400 mV into the LILEVEL[9:0] to associate this input level to the maximum frequency deviation level programmed into the audio deviation property. Note that selecting a particular value of LIATTEN[1:0] changes the input resistance of the LIN and RIN pins. This feature is used for cases where the expected peak input level exceeds the maximum input level of the LIN and RIN pins.

The maximum analog input level is 636 mVpK. If the analog input level from the audio baseband processor exceeds this voltage, series resistors must be inserted in front of the LIN and RIN pins to attenuate the voltage such that it is within the allowable operating range. For example, if the audio baseband's expected peak amplitude is 900 mV and the V_{IO} supply voltage is 1.8 V, the designer can use 30 kΩ series resistors in front of the LIN and RIN pins and select LIATTEN[1:0] = 11. The resulting expected peak input voltage at the LIN/RIN pins is 600 mV, since this is just a voltage divider between the LIN/RIN input resistance (see Table 14, 60 kΩ for this example) and the external resistor. Note that the Peak Input Voltage corresponding to the chosen LIATTEN[1:0] code still needs to satisfy the condition of being just greater than the attenuated voltage. In this example, a line attenuation code of LIATTEN[1:0] = 11 has a Peak Input Voltage of 636 mV, which is just greater than the expected peak attenuated voltage of 600 mV. Also, the expected peak attenuated voltage is entered into the LILEVEL[9:0] parameter. Again, in this example, 600 mV is entered into LILVEVEL[9:0]. This example shows one possible solution, but many other solutions exist. The optimal solution is to apply the largest possible voltage to the LIN and RIN pins for signal-to-noise considerations; however, practical resistor values may limit the choices.

Note that the TX_LINE_INPUT_LEVEL parameter will affect the high-pass filter characteristics of the ac-coupling capacitors and the resistance of the audio inputs.

The Si4710/11 has a programmable low audio level and high audio level indicators that allows the user to selectively enable and disable the carrier based on the presence of audio content. The TX_ASQ_LEVEL_LOW and TX_ASQ_LEVEL_HIGH parameters set the low level and high level thresholds in dBFS, respectively. The time required for the audio level to be below the low threshold is set with the TX_ASQ_DURATION_LOW parameter, and similarly, the time required for the audio level to be above the high threshold is set with the TX_ASQ_DURATION_HIGH parameter.

5.5. Audio Dynamic Range Control

The Si4710/11 includes digital audio dynamic range control with programmable gain, threshold, attack rate, and release rate. The total dynamic range reduction is set by the gain value and the audio output compression above the threshold is equal to Threshold/(Gain + Threshold) in dB. The gain specified cannot be larger than the absolute value of the threshold. This feature can also be disabled if audio compression is not desired.

The audio dynamic range control can be used to reduce the dynamic range of the audio signal, which improves the listening experience on the FM receiver. Audio dynamic range reduction increases the transmit volume by decreasing the peak amplitudes of audio signals and increasing the root mean square content of the audio signal. In other words, it amplifies signals below a threshold by a fixed gain and compresses audio signals above a threshold by the ratio of Threshold/(Gain + Threshold). Figure 17 shows an example transfer function of an audio dynamic range controller with the threshold set at –40 dBFS and a Gain = 20 dB relative to an uncompressed transfer function.

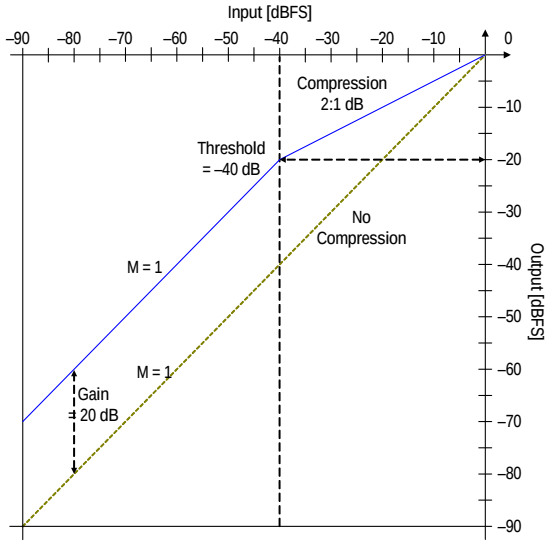

Figure 17. Audio Dynamic Range Transfer Function

For input signals below the threshold of –40 dBFS, the output signal is amplified or gained up by 20 dB relative to an uncompressed signal. Audio inputs above the threshold are compressed by a 2 to 1 dB ratio, meaning that every 2 dB increase in audio input level above the threshold results in an audio output increase of 1 dB. In this example, the input dynamic range of 90 dB is reduced to an output dynamic range of 70 dB.

Figure 18 shows the time domain characteristics of the audio dynamic range controller. The attack rate sets the speed with which the audio dynamic range controller responds to changes in the input level, and the release rate sets the speed with which the audio dynamic range controller returns to no compression once the audio input level drops below the threshold.

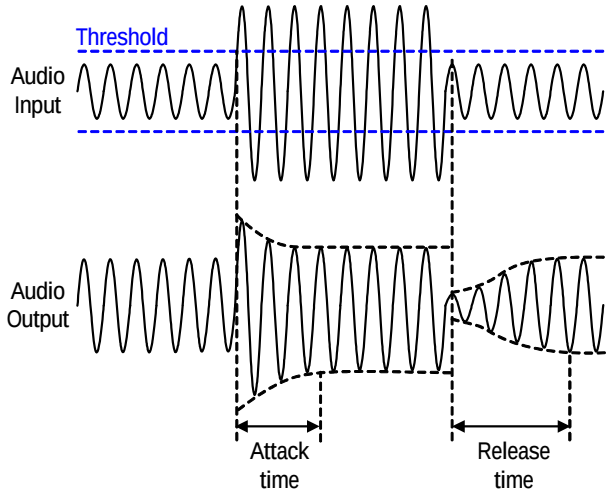

Figure 18. Time Domain Characteristics of the Audio Dynamic Range Controller

5.6. Audio Limiter

The Si4710/11 also includes a digital audio limiter. The audio limiter prevents over-modulation of the FM transmit output by dynamically attenuating peaks in the audio input signal that exceed a programmable threshold. The limiter threshold is set to the programmed audio deviation + ten percent. The threshold ensures that the output signal audio deviation does not exceed the programmed levels, avoiding audible artifacts or distortion in the target FM receiver, and complying with FCC or ETSI regulatory standards.

The limiter performs as a peak detector with an attack rate set to one audio sample, resulting in an almost immediate attenuation of the input peak. The recover rate is programmable to the customer's preference, and is set by default to 5 ms. This is the recommended setting to avoid audible pumping or popping. Please refer to "AN332: Universal Programming Guide."

5.7. Pre-Emphasis and De-Emphasis

Pre-emphasis and de-emphasis is a technique used by FM broadcasters to improve the signal-to-noise ratio of FM receivers by reducing the effects of high-frequency interference and noise. When the FM signal is transmitted, a pre-emphasis filter is applied to accentuate the high audio frequencies. All FM receivers incorporate a de-emphasis filter that attenuates high frequencies to restore a flat frequency response. Two time constants are used in various regions. The pre-emphasis time constant is programmable to 50 or 75 µs and is set by using the TX_PREEMPHASIS property.

5.8. RDS/RBDS Processor (Si4711 Only)

The Si4711 implements an RDS/RBDS* processor for symbol encoding, block synchronization, and error correction. Digital data can be transmitted with the Si4711 RDS/RBDS encoding feature.

RDS transmission is supported with three different modes. The first mode is the simplest mode and requires no additional user support except for pre-loading the desired RDS PI and PTY codes and up to 12 8-byte PS character strings. The Si4711 will transmit the PI code and rotate through the transmission of the PS character strings with no further control required from outside the device. The second mode allows for more complicated transmissions. The PI and PTY codes are written to the device as in mode 1. The remaining blocks (B, C, and D) are written to a 252 byte buffer. This buffer can hold 42 sets of BCD blocks. The Si4711 creates RDS groups by creating block A from the PI code, concatenating blocks BCD from the buffer, and rotating through the buffer. The BCD buffer is circular; so, the pattern is repeated until the buffer is changed. Finally, the third mode allows the outside controller to burst data into the BCD buffer, which emulates a FIFO. The data does not repeat, but, when the buffer is nearly empty, the Si4711 signals the outside device to initiate another data burst. This mode permits the outside device to use any RDS functionality (including open data applications) that it wants.

***Note:** RDS/RBDS is referred to only as RDS throughout the remainder of this document.

5.9. Tuning

The frequency synthesizer uses Silicon Laboratories' proven technology including a completely integrated VCO. The frequency synthesizer generates the quadrature local oscillator signal used to upconvert the low intermediate frequency to RF. The VCO frequency is locked to the reference clock and adjusted with an automatic frequency control (AFC) servo loop during transmission.

The tuning frequency can be directly programmed with commands. For example, to tune to 98.1 MHz, the user writes the TX_TUNE_FREQ command with an argument = 9810.

The Si4710/11 supports channel spacing of 50, 100, or 200 kHz.

5.10. Reference Clock

The Si4710/11 reference clock is programmable, supporting RCLK frequencies from 31.130 kHz to 40 MHz. The RCLK frequency divided by an integer number (the prescaler value) must fall in the range of 31,130 to 34,406 Hz. Therefore, the range of RCLK frequencies is not continuous below frequencies of 311.3 kHz. The default RCLK frequency is 32.768 kHz. Please refer to "AN332: Universal Programming Guide" for using other RCLK frequencies.

5.11. Control Interface

A serial port slave interface is provided; this allows an external controller to send commands to the Si4710/11 and receive responses from the device. The serial port can operate in three bus modes: 2-wire mode, SPI mode, or 3-wire mode. The Si4710/11 selects the bus mode by sampling the state of the GPO1 and GPO2/$\overline{\text{INT}}$ pins on the rising edge of $\overline{\text{RST}}$. The GPO1 pin includes an internal pull-up resistor that is connected while $\overline{\text{RST}}$ is low, and the GPO2/$\overline{\text{INT}}$ pin includes an internal pull-down resistor that is connected while $\overline{\text{RST}}$ is low. Therefore, it is only necessary for the user to actively drive pins that differ from these states.

Table 15. Bus Mode Select on Rising Edge of RST

Bus Mode	GPO1	GPO2/INT
2-Wire	1	0
SPI	1	1 (must drive)
3-Wire	0 (must drive)	0

After the rising edge of RST, the pins, GPO1 and GPO2/INT, are used as general-purpose output (O) pins as described in Section "5.12. GPO Outputs". In any bus mode, commands may only be sent after V_{IO} and V_{DD} supplies are applied.

5.11.1. 2-Wire Control Interface Mode

When selecting 2-wire mode, the user must ensure that SCLK is high during the rising edge of RST, and stays high until after the first start condition. Also, a start condition must not occur within 300 ns before the rising edge of RST.

2-wire bus mode uses only the SCLK and SDIO pins for signaling. A transaction begins with the START condition, which occurs when SDIO falls while SCLK is high. Next, the user drives an 8-bit control word serially on SDIO, which is captured by the device on rising edges of SCLK. The control word consists of a seven bit device address followed by a read/write bit (read = 1, write = 0). The Si4710/11 acknowledges the control word by driving SDIO low on the next falling edge of SCLK.

Although the Si4710/11 responds to only a single device address, this address can be changed with the SEN pin (note that the SEN pin is not used for signaling in 2-wire mode). When SEN = 0, the seven-bit device address is 0010001. When SEN = 1, the address is 1100011.

For write operations, the user then sends an eight bit data byte on SDIO, which is captured by the device on rising edges of SCLK. The Si4710/11 acknowledges each data byte by driving SDIO low for one cycle, on the next falling edge of SCLK. The user may write up to eight data bytes in a single two-wire transaction. The first byte is a command, and the next seven bytes are arguments.

For read operations, after the Si4710/11 has acknowledged the control byte, it drives an eight-bit data byte on SDIO, changing the state of SDIO on the falling edge of SCLK. The user acknowledges each data byte by driving SDIO low for one cycle, on the next falling edge of SCLK. If a data byte is not acknowledged, the transaction ends. The user may read up to 16 data bytes in a single two-wire transaction. These bytes contain the response data from the Si4710/11.

A 2-wire transaction ends with the STOP condition, which occurs when SDIO rises while SCLK is high.

For details on timing specifications and diagrams, refer to Table 5, "2-Wire Control Interface Characteristics[1,2,3]," on page 7, Figure 2, "2-Wire Control Interface Read and Write Timing Parameters," on page 8, and Figure 3, "2-Wire Control Interface Read and Write Timing Diagram," on page 8.

5.11.2. SPI Control Interface Mode

When selecting SPI mode, the user must ensure that a rising edge of SCLK does not occur within 300 ns before the rising edge of RST.

SPI bus mode uses the SCLK, SDIO, and SEN pins for read/write operations. For reads, the user can choose to receive data from the device on either SDIO or GPO1. A transaction begins when the user drives SEN low. The user then pulses SCLK eight times while driving an 8-bit control byte (MSB first) serially on SDIO. The device captures the data on rising edges of SCLK. The control byte must have one of these values:

0x48 = write eight command/argument bytes (user drives write data on SDIO)

0x80 = read status byte (device drives read data on SDIO)

0xA0 = read status byte (device drives read data on GPO1)

0xC0 = read 16 response bytes (device drives read data on SDIO)

0xE0 = read 16 response bytes (device drives read data on GPO1)

When writing a command, after the control byte has been written, the user must drive exactly eight data bytes (a command byte and seven argument bytes) on SDIO. The data will be captured by the device on the rising edges of SCLK. After all eight data bytes have been written, the user raises SEN after the last falling edge of SCLK to end the transaction.

In any bus mode, before sending a command or reading a response, the user must first read the status byte to ensure that the device is ready (CTS bit is high). In SPI mode, this is done by sending control byte 0x80 or 0xA0, followed by reading a single byte on SDIO or GPO1. The Si4710/11 changes the state of SDIO or GPO1 after the falling edges of SCLK. Data should be captured by the user on the rising edges of SCLK. After the status byte has been read, the user raises SEN after the last falling edge of SCLK to end the transaction.

When reading a response, the user must read exactly 16 data bytes after sending the control byte. It is recommended that the user keep SEN low until all bytes

have transferred. However, it will not disrupt the protocol if SEN temporarily goes high at any time, as long as the user does not change the state of SCLK while SEN is high. After 16 bytes have been read, the user raises SEN after the last falling edge of SCLK to end the transaction.

At the end of any SPI transaction, the user must drive SEN high after the final falling edge of SCLK. At any time during a transaction, if SEN is sampled high by the device on a rising edge of SCLK, the transaction will be aborted. When SEN is high, SCLK may toggle without affecting the device.

For details on timing specifications and diagrams, refer to Figure 6 and Figure 7 on page 10.

5.11.3. 3-Wire Control Interface Mode

When selecting 3-wire mode, the user must ensure that a rising edge of SCLK does not occur within 300 ns before the rising edge of RST.

3-wire bus mode uses the SCLK, SDIO and SEN pins. A transaction begins when the system controller drives SEN low. Next, the system controller drives a 9-bit control word on SDIO, which is captured by the device on rising edges of SCLK. The control word is comprised of a three bit chip address (A7:A5 = 101b), a read/write bit (write = 0, read = 1), the chip address (A4 = 0), and a four bit register address (A3:A0).

For write operations, the control word is followed by a 16-bit data word, which is captured by the device on rising edges of SCLK.

For read operations, the control word is followed by a delay of one-half SCLK cycle for bus turnaround. Next, the Si4710/11 drives the 16-bit read data word serially on SDIO, changing the state of SDIO on each rising edge of SCLK.

A transaction ends when the user sets SEN high, then pulses SCLK high and low one final time. SCLK may either stop or continue to toggle while SEN is high.

In 3-wire mode, commands are sent by first writing each argument to register(s) 0xA1–0xA3, then writing the command word to register 0xA0. A response is retrieved by reading registers 0xA8–0xAF.

For details on timing specifications and diagrams, refer to Table 6, “3-Wire Control Interface Characteristics,” on page 9, Figure 4, “3-Wire Control Interface Write Timing Parameters,” on page 9, and Figure 5, “3-Wire Control Interface Read Timing Parameters,” on page 9.

5.12. GPO Outputs

The Si4710/11 provides three general-purpose output pins. The GPO pins can be configured to output a constant low, constant high, or high-Z. The GPO pins are multiplexed with the bus mode pins or DCLK depending on the application schematic of the transmitter. GPO2/INT can be configured to provide interrupts.

5.13. Reset, Powerup, and Powerdown

Setting the RST pin low will disable analog and digital circuitry, reset the registers to their default settings, and disable the bus. Setting the RST pin high will bring the device out of reset and place it in powerdown mode.

A powerdown mode is available to reduce power consumption when the part is idle. Putting the device in powerdown mode will disable analog and digital circuitry and keep the bus active. For more information concerning Reset, Powerup, Powerdown, and Initialization, refer to “AN332: Universal Programming Guide”.

5.14. Programming with Commands

To ease development time and offer maximum customization, the Si4710/11 provides a simple yet powerful software interface to program the transmitter. The device is programmed using commands, arguments, properties, and responses.

To perform an action, the user writes a command byte and associated arguments causing the chip to execute the given command. Commands control actions, such as powering up the device, shutting down the device, or tuning to a station. Arguments are specific to a given command and are used to modify the command. For example, after the TX_TUNE_FREQ command, arguments are required to set the tune frequency. A complete list of commands is available in Table 16, “Si471x Command Summary,” on page 28.

Properties are a special command argument used to modify the default chip operation and are generally configured immediately after powerup. Examples of properties are TX_PREEMPHASIS and GPO_CONFIGURE. A complete list of properties is available in Table 17, “Si471x Property Summary,” on page 29.

Responses provide the user information and are echoed after a command and associated arguments are issued. At a minimum, all commands provide a one-byte status update indicating interrupt and clear-to-send status information. For a detailed description of using the commands and properties of the Si4710/11, see “AN332: Universal Programming Guide.”

6. Commands and Properties

Table 16. Si471x Command Summary

Cmd	Name	Description
0x01	POWER_UP	Power up device and mode selection. Modes include FM transmit and analog/digital audio interface configuration.
0x10	GET_REV	Returns revision information on the device.
0x11	POWER_DOWN	Power down device.
0x12	SET_PROPERTY	Sets the value of a property.
0x13	GET_PROPERTY	Retrieves a property's value.
0x14	GET_INT_STATUS	Read interrupt status bits.
0x15	PATCH_ARGS	Reserved command used for patch file downloads.
0x16	PATCH_DATA	Reserved command used for patch file downloads.
0x30	TX_TUNE_FREQ	Tunes to given transmit frequency.
0x31	TX_TUNE_POWER	Sets the output power level and tunes the antenna capacitor
0x33	TX_TUNE_STATUS	Queries the status of a previously sent TX Tune Freq, TX Tune Power, or TX Tune Measure command.
0x34	TX_ASQ_STATUS	Queries the TX status and input audio signal metrics.
0x35	TX_RDS_BUFF	**Si4711 Only**. Queries the status of the RDS Group Buffer and loads new data into buffer.
0x36	TX_RDS_PS	**Si4711 Only**. Set up default PS strings.
0x80	GPO_CTL	Configures GPO3 as output or Hi-Z.
0x81	GPO_SET	Sets GPO3 output level (low or high).

Table 17. Si471x Property Summary

Prop	Name	Description	Default
0x0001	GPO_IEN	Enables interrupt sources.	0x0000
0x0101	DIGITAL_INPUT _FORMAT	Configures the digital input format.	0x0000
0x0103	DIGITAL_INPUT _SAMPLE_RATE	Configures the digital input sample rate in 10 Hz steps. Default is 0.	0x0000
0x0201	REFCLK_FREQ	Sets frequency of the reference clock in Hz. The range is 31130 to 34406 Hz, or 0 to disable the AFC. Default is 32768 Hz.	0x8000
0x0202	REFCLK_PRESCALE	Sets the prescaler value for the reference clock.	0x0001
0x2100	TX_COMPONENT_ENABLE	Enable transmit multiplex signal components. Default has pilot and L-R enabled.	0x0003
0x2101	TX_AUDIO_DEVIATION	Configures audio frequency deviation level. Units are in 10 Hz increments. Default is 6285 (68.25 kHz).	0x1AA9
0x2102	TX_PILOT_DEVIATION	Configures pilot tone frequency deviation level. Units are in 10 Hz increments. Default is 675 (6.75 kHz)	0x02A3
0x2103	TX_RDS_DEVIATION	**Si4711 Only.** Configures the RDS/RBDS frequency deviation level. Units are in 10 Hz increments. Default is 2 kHz.	0x00C8
0x2104	TX_LINE_INPUT_LEVEL	Configures maximum analog line input level to the LIN/RIN pins to reach the maximum deviation level programmed into the audio deviation property TX Audio Deviation. Default is 636 mV_{PK}.	0x327C
0x2105	TX_LINE_INPUT_MUTE	Sets line input mute. L and R inputs may be independently muted. Default is not muted.	0x0000
0x2106	TX_PREEMPHASIS	Configures pre-emphasis time constant. Default is 0 (75 µS).	0x0000
0x2107	TX_PILOT_FREQUENCY	Configures the frequency of the stereo pilot. Default is 19000 Hz.	0x4A38
0x2200	TX_ACOMP_ENABLE	Enables audio dynamic range control. Default is 0 (disabled).	0x0002
0x2201	TX_ACOMP_THRESHOLD	Sets the threshold level for audio dynamic range control. Default is –40 dB.	0xFFD8
0x2202	TX_ACOMP_ATTACK_TIME	Sets the attack time for audio dynamic range control. Default is 0 (0.5 ms).	0x0000
0x2203	TX_ACOMP_RELEASE_TIME	Sets the release time for audio dynamic range control. Default is 4 (1000 ms).	0x0004
0x2204	TX_ACOMP_GAIN	Sets the gain for audio dynamic range control. Default is 15 dB.	0x000F
0x2205	TX_LIMITER_RELEASE_TIME	Sets the limiter release time. Default is 102 (5.01 ms)	0x0066
0x2300	TX_ASQ_INTERRUPT_SOURCE	Configures measurements related to signal quality metrics. Default is none selected.	0x0000
0x2301	TX_ASQ_LEVEL_LOW	Configures low audio input level detection threshold. This threshold can be used to detect silence on the incoming audio.	0x0000

Table 17. Si471x Property Summary (Continued)

Prop	Name	Description	Default
0x2302	TX_ASQ_DURATION_LOW	Configures the duration which the input audio level must be below the low threshold in order to detect a low audio condition.	0x0000
0x2303	TX_ASQ_LEVEL_HIGH	Configures high audio input level detection threshold. This threshold can be used to detect activity on the incoming audio.	0x0000
0x2304	TX_ASQ_DURATION_HIGH	Configures the duration which the input audio level must be above the high threshold in order to detect a high audio condition.	0x0000
0x2C00	TX_RDS_INTERRUPT_SOURCE	**Si4711 Only.** Configure RDS interrupt sources. Default is none selected.	0x0000
0x2C01	TX_RDS_PI	**Si4711 Only.** Sets transmit RDS program identifier.	0x40A7
0x2C02	TX_RDS_PS_MIX	**Si4711 Only.** Configures mix of RDS PS Group with RDS Group Buffer.	0x0003
0x2C03	TX_RDS_PS_MISC	**Si4711 Only.** Miscellaneous bits to transmit along with RDS_PS Groups.	0x1008
0x2C04	TX_RDS_PS_REPEAT_COUNT	**Si4711 Only.** Number of times to repeat transmission of a PS message before transmitting the next PS message.	0x0003
0x2C05	TX_RDS_PS_MESSAGE_COUNT	**Si4711 Only.** Number of PS messages in use.	0x0001
0x2C06	TX_RDS_PS_AF	**Si4711 Only.** RDS Program Service Alternate Frequency. This provides the ability to inform the receiver of a single alternate frequency using AF Method A coding and is transmitted along with the RDS_PS Groups.	0xE0E0
0x2C07	TX_RDS_FIFO_SIZE	**Si4711 Only.** Number of blocks reserved for the FIFO. Note that the value written must be one larger than the desired FIFO size.	0x0000

7. Pin Descriptions: Si4710/11-GM

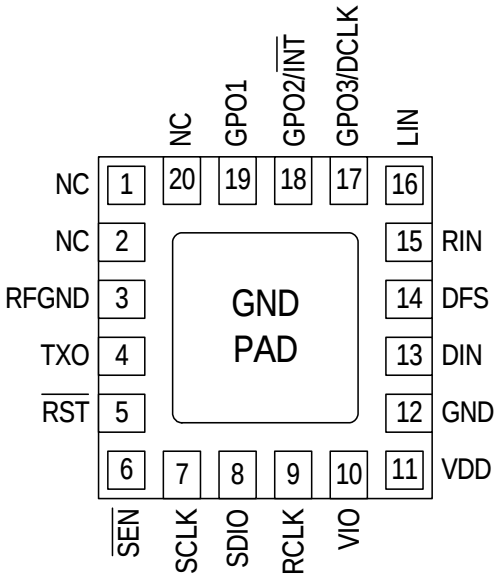

Pin Number(s)	Name	Description
1, 2, 20	NC	No connect. Leave floating.
3	RFGND	RF ground. Connect to ground plane on PCB.
4	TXO	FM transmit output connection to transmit antenna.
5	RST	Device reset (active low) input.
6	SEN	Serial enable input (active low).
7	SCLK	Serial clock input.
8	SDIO	Serial data input/output.
9	RCLK	External reference oscillator input.
10	V_{IO}	I/O supply voltage.
11	V_{DD}	Supply voltage. May be connected directly to battery.
13	DIN	Digital input data.
14	DFS	Digital frame synchronization input.
15	RIN	Right audio line input.
16	LIN	Left audio line input.
17	GPO3/DCLK	General purpose output/digital bit synchronous clock input.
18	GPO2/$\overline{INT}$	General purpose output/interrupt request.
19	GPO1	General purpose output.
12, GND PAD	GND	Ground. Connect to ground plane on PCB.

8. Ordering Guide

Part Number*	Description	Package Type	Operating Temperature
Si4710-B30-GM	Portable broadcast FM transmitter	QFN Pb-free	–20 to 85 °C
Si4711-B30-GM	Portable broadcast FM transmitter with RDS/RBDS encoder	QFN Pb-free	–20 to 85 °C
***Note:** Add an “(R)” at the end of the device part number to denote tape and reel option; 2500 quantity per reel.			

9. Package Markings (Top Marks)

9.1. Si4710 Top Mark

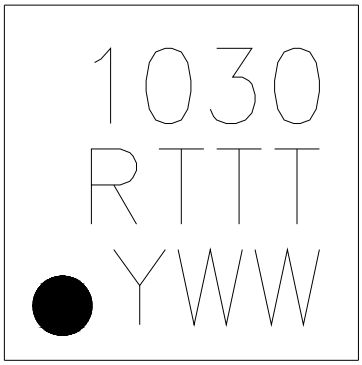

Figure 19. Si4710 Top Mark

9.2. Si4711 Top Mark

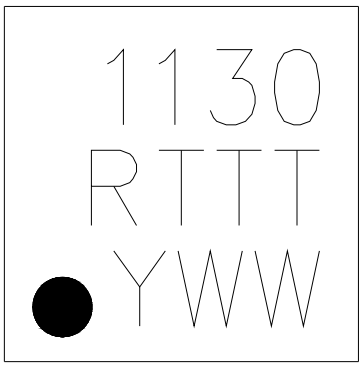

Figure 20. Si4711 Top Mark

9.3. Top Mark Explanation

Mark Method:	YAG Laser	
Line 1 Marking:	Part Number	10 = Si4710 11 = Si4711
	Firmware Revision	30 = Firmware Revision 30
Line 2 Marking:	R = Die Revision	B = Revision B Die
	TTT = Internal Code	Internal tracking code.
Line 3 Marking:	Circle = 0.5 mm Diameter (Bottom-Left Justified)	Pin 1 Identifier
	Y = Year WW = Workweek	Assigned by the Assembly House. Corresponds to the last significant digit of the year and workweek of the mold date.

10. Package Outline: Si4710/11-GM

Figure 21 illustrates the package details for the Si4710/11. Table 18 lists the values for the dimensions shown in the illustration.

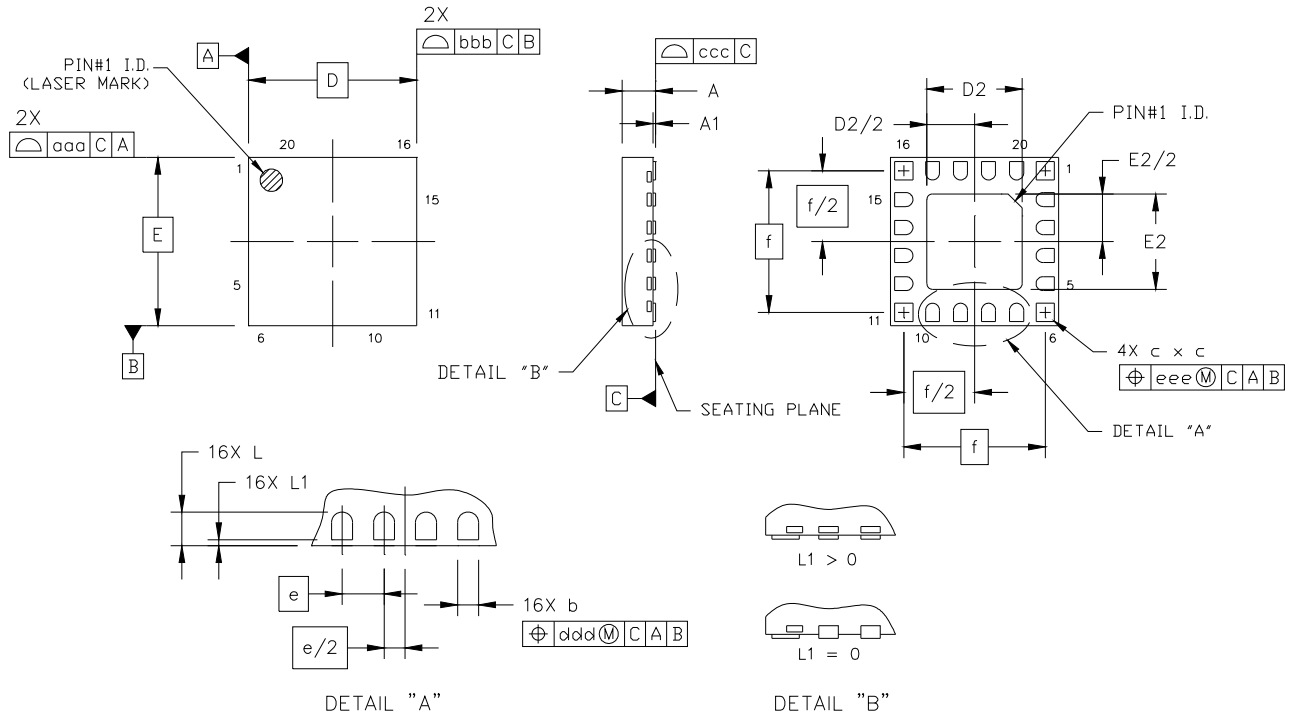

Figure 21. 20-Pin Quad Flat No-Lead (QFN)

Table 18. Package Dimensions

Symbol	Millimeters		
	Min	Nom	Max
A	0.50	0.55	0.60
A1	0.00	0.02	0.05
b	0.20	0.25	0.30
c	0.27	0.32	0.37
D	3.00 BSC		
D2	1.65	1.70	1.75
e	0.50 BSC		
E	3.00 BSC		
E2	1.65	1.70	1.75

Symbol	Millimeters		
	Min	Nom	Max
f	2.53 BSC		
L	0.35	0.40	0.45
L1	0.00	—	0.10
aaa	—	—	0.05
bbb	—	—	0.05
ccc	—	—	0.08
ddd	—	—	0.10
eee	—	—	0.10

Notes:

1. All dimensions are shown in millimeters (mm) unless otherwise noted.
2. Dimensioning and tolerancing per ANSI Y14.5M-1994.

11. PCB Land Pattern: Si4710/11-GM

Figure 22 illustrates the PCB land pattern details for the Si4710/11-GM. Table 19 lists the values for the dimensions shown in the illustration.

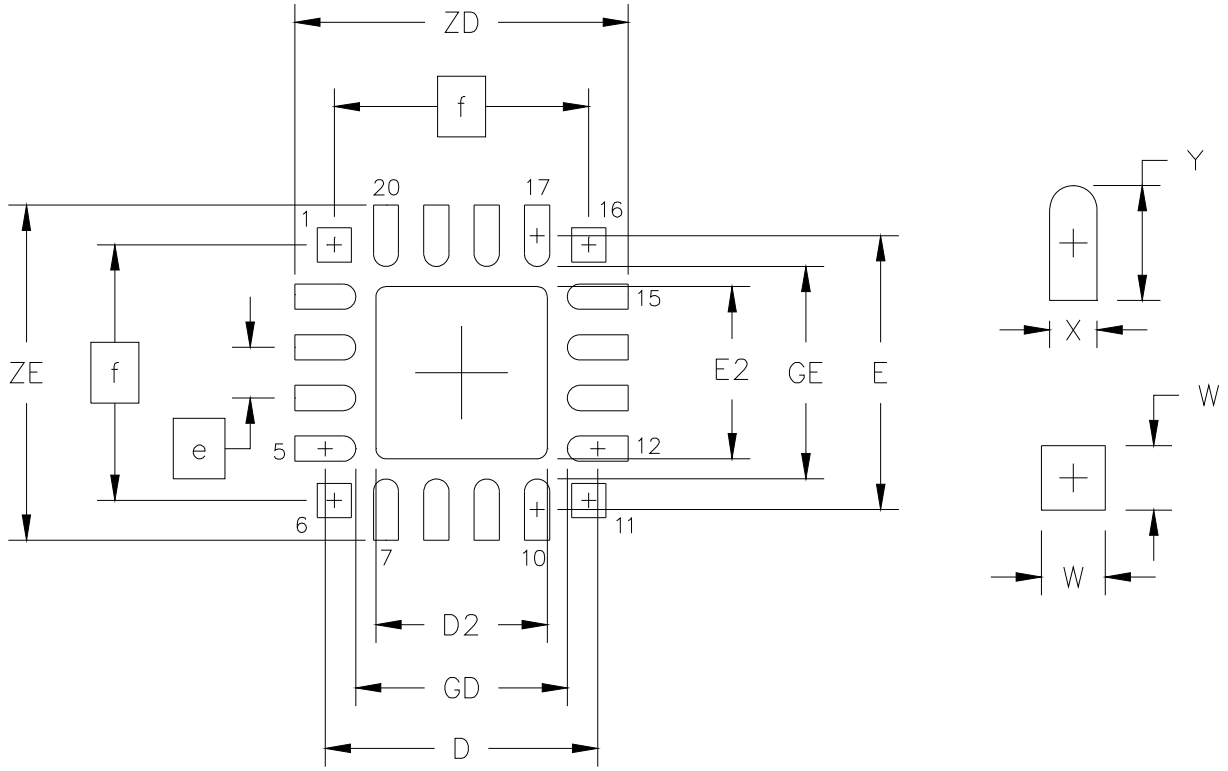

Figure 22. PCB Land Pattern

Table 19. PCB Land Pattern Dimensions

Symbol	Millimeters	
	Min	Max
D	2.71 REF	
D2	1.60	1.80
e	0.50 BSC	
E	2.71 REF	
E2	1.60	1.80
f	2.53 BSC	
GD	2.10	—

Symbol	Millimeters	
	Min	Max
GE	2.10	—
W	—	0.34
X	—	0.28
Y	0.61 REF	
ZE	—	3.31
ZD	—	3.31

Notes: General

1. All dimensions shown are in millimeters (mm) unless otherwise noted.
2. Dimensioning and tolerancing is per the ANSI Y14.5M-1994 specification.
3. This land pattern design is based on IPC-SM-782 guidelines.
4. All dimensions shown are at Maximum Material Condition (MMC). Least Material Condition (LMC) is calculated based on a fabrication allowance of 0.05 mm.

Note: Solder Mask Design

1. All metal pads are to be non-solder-mask-defined (NSMD). Clearance between the solder mask and the metal pad is to be 60 mm minimum, all the way around the pad.

Notes: Stencil Design

1. A stainless steel, laser-cut and electro-polished stencil with trapezoidal walls should be used to assure good solder paste release.
2. The stencil thickness should be 0.125 mm (5 mils).
3. The ratio of stencil aperture to land pad size should be 1:1 for the perimeter pads.
4. A 1.45 x 1.45 mm square aperture should be used for the center pad. This provides approximately 70% solder paste coverage on the pad, which is optimum to assure correct component standoff.

Notes: Card Assembly

1. A No-Clean, Type-3 solder paste is recommended.
2. The recommended card reflow profile is per the JEDEC/IPC J-STD-020C specification for small body components.

12. Additional Reference Resources

- Si47xx-Evaluation Board User's Guide
- AN309: Si4710/11/12/13 Evaluation Board Quick-Start Guide
- AN332: Universal Programming Guide
- AN383: Universal Antenna Selection and Layout Guidelines
- AN388: Universal Evaluation Board Test Procedure
- Si4710/11/12/13 Customer Support Site: http://www.mysilabs.com
  This site contains all application notes, evaluation board schematics and layouts, and evaluation software. NDA is required for access. To request access, send mysilabs user name and request for access to fminfo@silabs.com.

NOTES:

DOCUMENT CHANGE LIST

Revision 0.5 to Revision 1.1

- Updated Table 9 on pages 12 and 13
- Corrected typo in Section 5.3.2 on page 21.
- Updated references to new application notes throughout document.
- Updated Table 3 on page 5.
- Updated production test condition in Table 9 on page 12.

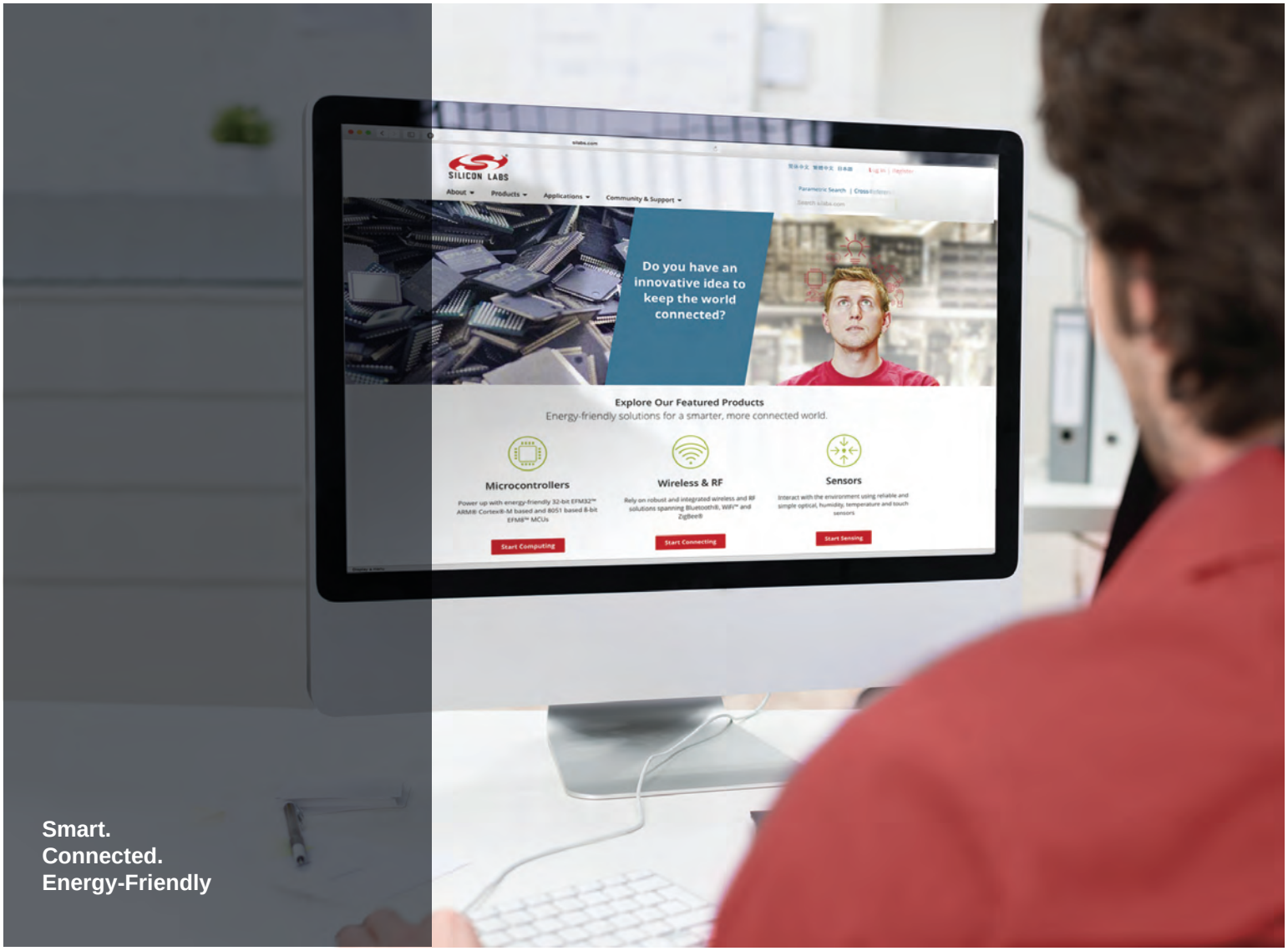

Products
www.silabs.com/products

Quality
www.silabs.com/quality

Support and Community
community.silabs.com

Disclaimer
Silicon Laboratories intends to provide customers with the latest, accurate, and in-depth documentation of all peripherals and modules available for system and software implementers using or intending to use the Silicon Laboratories products. Characterization data, available modules and peripherals, memory sizes and memory addresses refer to each specific device, and "Typical" parameters provided can and do vary in different applications. Application examples described herein are for illustrative purposes only. Silicon Laboratories reserves the right to make changes without further notice and limitation to product information, specifications, and descriptions herein, and does not give warranties as to the accuracy or completeness of the included information. Silicon Laboratories shall have no liability for the consequences of use of the information supplied herein. This document does not imply or express copyright licenses granted hereunder to design or fabricate any integrated circuits. The products must not be used within any Life Support System without the specific written consent of Silicon Laboratories. A "Life Support System" is any product or system intended to support or sustain life and/or health, which, if it fails, can be reasonably expected to result in significant personal injury or death. Silicon Laboratories products are generally not intended for military applications. Silicon Laboratories products shall under no circumstances be used in weapons of mass destruction including (but not limited to) nuclear, biological or chemical weapons, or missiles capable of delivering such weapons.

Trademark Information
Silicon Laboratories Inc., Silicon Laboratories, Silicon Labs, SiLabs and the Silicon Labs logo, CMEMS®, EFM, EFM32, EFR, Energy Micro, Energy Micro logo and combinations thereof, "the world's most energy friendly microcontrollers", Ember®, EZLink®, EZMac®, EZRadio®, EZRadioPRO®, DSPLL®, ISOmodem ®, Precision32®, ProSLIC®, SiPHY®, USBXpress® and others are trademarks or registered trademarks of Silicon Laboratories Inc. ARM, CORTEX, Cortex-M3 and THUMB are trademarks or registered trademarks of ARM Holdings. Keil is a registered trademark of ARM Limited. All other products or brand names mentioned herein are trademarks of their respective holders.

Silicon Laboratories Inc.
400 West Cesar Chavez
Austin, TX 78701
USA

http://www.silabs.com

Общество с ограниченной ответственностью «МосЧип» ИНН 7719860671 / КПП 771901001
Адрес: 105318, г.Москва, ул.Щербаковская д.3, офис 1107

Данный компонент на территории Российской Федерации

Вы можете приобрести в компании MosChip.

Для оперативного оформления запроса Вам необходимо перейти по данной ссылке:

http://moschip.ru/get-element

Вы можете разместить у нас заказ для любого Вашего проекта, будь то серийное производство или разработка единичного прибора.

В нашем ассортименте представлены ведущие мировые производители активных и пассивных электронных компонентов.

Нашей специализацией является поставка электронной компонентной базы двойного назначения, продукции таких производителей как XILINX, Intel (ex.ALTERA), Vicor, Microchip, Texas Instruments, Analog Devices, Mini-Circuits, Amphenol, Glenair.

Сотрудничество с глобальными дистрибьюторами электронных компонентов, предоставляет возможность заказывать и получать с международных складов практически любой перечень компонентов в оптимальные для Вас сроки.

На всех этапах разработки и производства наши партнеры могут получить квалифицированную поддержку опытных инженеров.

Система менеджмента качества компании отвечает требованиям в соответствии с ГОСТ Р ИСО 9001, ГОСТ РВ 0015-002 и ЭС РД 009

Офис по работе с юридическими лицами:

105318, г.Москва, ул.Щербаковская д.3, офис 1107, 1118, ДЦ «Щербаковский»

Телефон: +7 495 668-12-70 (многоканальный)

Факс: +7 495 668-12-70 (доб.304)

E-mail: info@moschip.ru

Skype отдела продаж:
moschip.ru
moschip.ru_4
moschip.ru_6
moschip.ru_9