RoHS

Lxx08xx & Qxx08xx & Qxx08xHx Series

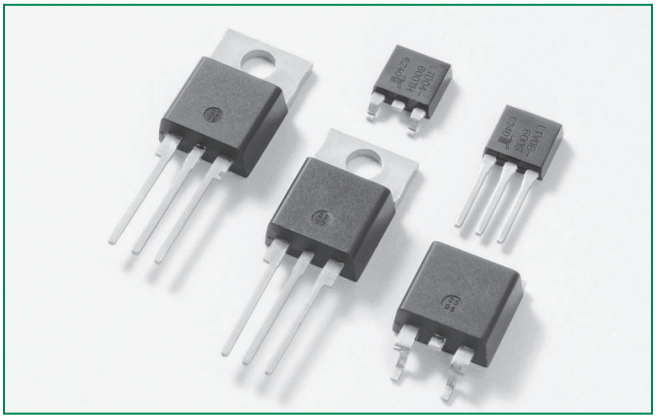

Description

8 Amp bi-directional solid state switch series is designed for AC switching and phase control applications such as motor speed and temperature modulation controls, lighting controls, and static switching relays.

Sensitive type devices guarantee gate control in Quadrants I & IV needed for digital control circuitry.

Standard type devices normally operate in Quadrants I & III triggered from AC line.

Alternistor type devices only operate in quadrants I, II, & III and are used in circuits requiring high dv/dt capability.

Agency Approval

Agency	Agency File Number
	L Package: E71639

Main Features

Symbol	Value	Unit
$I_{T(RMS)}$	8	A
V_{DRM}/V_{RRM}	400 to 1000	V
$I_{GT\ (Q1)}$	5 to 50	mA

Features & Benefits

- RoHS compliant
- Glass – passivated junctions
- Voltage capability up to 1000 V
- Surge capability up to 100 A
- Electrically isolated "L-Package" is UL recognized for 2500Vrms
- Solid-state switching eliminates arcing or contact bounce that create voltage transients
- No contacts to wear out from reaction of switching events
- Restricted (or limited) RFI generation, depending on activation point of sine wave
- Requires only a small gate activation pulse in each half-cycle

Schematic Symbol

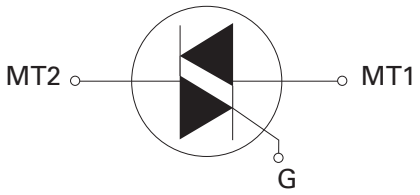

Applications

Excellent for AC switching and phase control applications such as heating, lighting, and motor speed controls.

Typical applications are AC solid-state switches, light dimmers, power tools, home/brown goods and white goods appliances.

Alternistor Triacs (no snubber required) are used in applications with extremely inductive loads requiring highest commutation performance.

Internally constructed isolated packages are offered for ease of heat sinking with highest isolation voltage.

©2011 Littelfuse, Inc
Specifications are subject to change without notice.
Please refer to http://www.littelfuse.com for current information.

Absolute Maximum Ratings — Sensitive Triac (4 Quadrants)

Symbol	Parameter			Value	Unit
$I_{T(RMS)}$	RMS on-state current (full sine wave)	Lxx08Ly	T_C = 80°C	8	A
		Lxx08Ry / Lxx08Vy / Lxx08Dy	T_C = 85°C		
I_{TSM}	Non repetitive surge peak on-state current (full cycle, T_J initial = 25°C)	f = 50 Hz	t = 20 ms	65	A
		f = 60 Hz	t = 16.7 ms	85	
I^2t	I^2t Value for fusing	t_p = 8.3 ms		26.5	A^2s
di/dt	Critical rate of rise of on-state current I_G = 50mA with 0.1µs rise time	f = 120 Hz	T_J = 110°C	70	A/µs
I_{GTM}	Peak gate trigger current	$t_p \leq$ 10 µs	T_J = 110°C	1.6	A
$P_{G(AV)}$	Average gate power dissipation		T_J = 110°C	0.4	W
T_{stg}	Storage temperature range			-40 to 150	°C
T_J	Operating junction temperature range			-40 to 110	°C

Note: xx = voltage, y = sensitivity

Absolute Maximum Ratings — Standard Triac

Symbol	Parameter			Value	Unit
$I_{T(RMS)}$	RMS on-state current (full sine wave)	Qxx08Ry / Qxx08Ny	T_C = 95°C	8	A
		Qxx08Ly	T_C = 90°C		
I_{TSM}	Non repetitive surge peak on-state current (full cycle, T_J initial = 25°C)	f = 50 Hz	t = 20 ms	83	A
		f = 60 Hz	t = 16.7 ms	100	
I^2t	I^2t Value for fusing	t_p = 8.3 ms		41	A^2s
di/dt	Critical rate of rise of on-state current I_G = 200mA with ≤ 0.1µs rise time	f = 120 Hz	T_J = 125°C	70	A/µs
I_{GTM}	Peak gate trigger current	$t_p \leq$ 10 µs; $I_{GT} \leq T_{GTM}$	T_J = 125°C	1.8	A
$P_{G(AV)}$	Average gate power dissipation		T_J = 125°C	0.5	W
T_{stg}	Storage temperature range			-40 to 150	°C
T_J	Operating junction temperature range			-40 to 125	°C

Note: xx = voltage, y = sensitivity

©2011 Littelfuse, Inc
Specifications are subject to change without notice.
Please refer to http://www.littelfuse.com for current information.

Absolute Maximum Ratings — Alternistor (3 Quadrants)

Symbol	Parameter				Value	Unit
$I_{T(RMS)}$	RMS on-state current (full sine wave)	Qxx08LHy		T_C = 90°C	8	A
		Qxx08RHy / Qxx08NHy Qxx08VHy / Qxx08DHy		T_C = 95°C		
I_{TSM}	Non repetitive surge peak on-state current (full cycle, T_J initial = 25°C)	f = 50 Hz	t = 20 ms	Qxx08VHy / Qxx08DHy	80	A
				Qxx08LHy / Qxx08RHy / Qxx08NHy	83	
		f = 60 Hz	t = 16.7 ms	Qxx08VHy / Qxx08DHy	85	
				Qxx08LHy / Qxx08RHy / Qxx08NHy	100	
I^2t	I^2t Value for fusing	t_p = 8.3 ms		Qxx08VHy / Qxx08DHy	30	A^2s
				Qxx08LHy / Qxx08RHy / Qxx08NHy	41	
di/dt	Critical rate of rise of on-state current	f = 120 Hz		T_J = 125°C	70	A/µs
I_{GTM}	Peak gate trigger current	$t_P \leq 10$ µs; $I_{GT} \leq I_{GTM}$	T_J = 125°C	Qxx08VHy / Qxx08DHy	1.6	A
				Qxx08LHy / Qxx08RHy / Qxx08NHy	2.0	
$P_{G(AV)}$	Average gate power dissipation	T_J = 125°C	I_{GT} = 10mA	Qxx08VHy / Qxx08DHy	0.4	W
			I_{GT} = 35mA	Qxx08LHy / Qxx08RHy / Qxx08NHy	0.5	
T_{stg}	Storage temperature range				-40 to 150	°C
T_J	Operating junction temperature range				-40 to 125	°C

Note: xx = voltage, y = sensitivity

Electrical Characteristics (T_J = 25°C, unless otherwise specified) — Sensitive Triac (4 Quadrants)

Symbol	Test Conditions	Quadrant		Lxx08x6	Lxx08x8	Unit
I_{GT}	V_D = 12V R_L = 60 Ω	I – II – III IV	MAX.	5 10	10 20	mA
V_{GT}		ALL	MAX.	1.3		V
V_{GD}	$V_D = V_{DRM}$ R_L = 3.3 kΩ T_J = 110°C	ALL	MIN.	0.2		V
I_H	I_T = 100mA		MAX.	10	20	mA
dv/dt	$V_D = V_{DRM}$ Gate Open T_J = 100°C	400V	TYP.	30	40	V/µs
		600V		20	30	
(dv/dt)c	(di/dt)c = 4.3 A/ms T_J = 110°C		TYP.	2	2	V/µs
t_{gt}	I_G = 100mA PW = 15µs I_T = 11.3 A(pk)		TYP.	3.0	3.2	µs

Note: xx = voltage, x = package, y = sensitivity

©2011 Littelfuse, Inc
Specifications are subject to change without notice.
Please refer to http://www.littelfuse.com for current information.

Electrical Characteristics (T_J = 25°C, unless otherwise specified) — Standard Triac

Symbol	Test Conditions	Quadrant		Qxx08x4	Qxx08x5	Unit
I_{GT}	V_D = 12V R_L = 60 Ω	I – II – III IV	MAX. TYP.	25 50	50 75	mA
V_{GT}		I – II – III	MAX.	1.3		V
V_{GD}	$V_D = V_{DRM}$ R_L = 3.3 kΩ T_J = 125°C	ALL	MIN.	0.2		V
I_H	I_T = 200mA		MAX.	50	50	mA
dv/dt	$V_D = V_{DRM}$ Gate Open T_J = 125°C	400V	MIN.	150		V/µs
		600V			125	
		800V			100	
		1000V			80	
(dv/dt)c	(di/dt)c = 4.3 A/ms T_J = 125°C		TYP.	4	4	V/µs
t_{gt}	I_G = 100mA PW = 15µs I_T = 11.3 A(pk)		TYP.	3.0	3.0	µs

Electrical Characteristics (T_J = 25°C, unless otherwise specified) — Alternistor Triac (3 Quadrants)

Symbol	Test Conditions	Quadrant			Qxx08xH3	Qxx08xH4	Unit
I_{GT}	V_D = 12V R_L = 60 Ω	I – II – III	MAX.		10	35	mA
V_{GT}		I – II – III	MAX.		1.3		V
V_{GD}	$V_D = V_{DRM}$ R_L = 3.3 kΩ T_J = 125°C	I – II – III	MIN.		0.2		V
I_H	I_T = 100mA		MAX.		15	35	mA
dv/dt	$V_D = V_{DRM}$ Gate Open T_J = 125°C	Qxx08LHy / Qxx08RHy / Qxx08NHy	MIN.	400V	75	400	V/µs
				600V	50	300	
				800V		200	
				1000V		100	
		Qxx08VHy / Qxx08DHy		400V	75	450	
				600V	50	350	
				800V		250	
				1000V		150	
(dv/dt)c	(di/dt)c = 4.3 A/ms T_J = 125°C		MIN.		20	25	V/µs
t_{gt}	I_G = 100mA PW = 15µs I_T = 11.3 A(pk)		TYP.		4.0	4.0	µs

Note : xx = voltage, x = package, y = sensitivity

©2011 Littelfuse, Inc
Specifications are subject to change without notice.
Please refer to http://www.littelfuse.com for current information.

Static Characteristics

Symbol	Test Conditions					Value	Unit
V_{TM}	I_{TM} = 11.3A t_p = 380 µs				MAX.	1.60	V
I_{DRM} I_{RRM}	$V_{DRM} = V_{RRM}$	Lxx08xy	T_J = 25°C	400 - 600V	MAX.	20	µA
			T_J = 110°C	400 - 600V		0.5	mA
		Qxx08xy	T_J = 25°C	400 - 1000V		50	µA
			T_J = 125°C	400 - 800V		2	mA
			T_J = 100°C	1000V		3	
		Qxx08xHy	T_J = 25°C	400 - 800V		10	µA
				1000V		20	
			T_J = 125°C	400 - 800V		2	mA
			T_J = 100°C	1000V		3	

Thermal Resistances

Symbol	Parameter		Value	Unit
$R_{\theta(J-C)}$	Junction to case (AC)	L/Qxx08Ryy / L/Qxx08Nyy	1.5	°C/W
		L/Qxx08Lyy	2.8	
		L/Qxx08Vyy	2.1	
$R_{\theta(J-A)}$	Junction to ambient	L/Qxx08Ryy	45	°C/W
		L/Qxx08Lyy	50	
		L/Qxx08Vyy	64	

Note: xx = voltage, x = package, y = sensitivity, yy = type & sensitivity

Figure 1: Definition of Quadrants

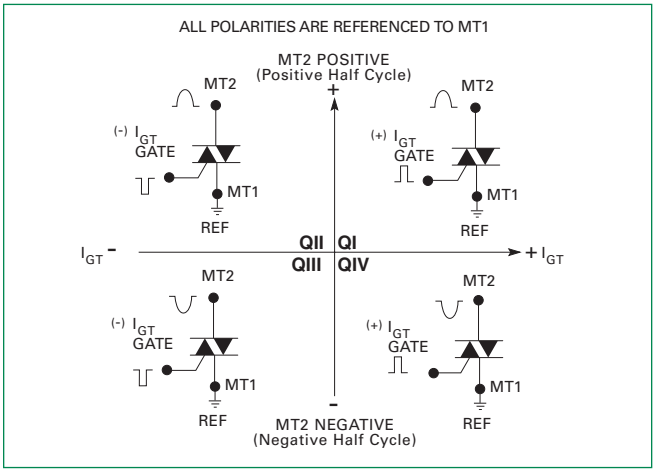

Note: Alternistors will not operate in QIV

Figure 2: Normalized DC Gate Trigger Current for All Quadrants vs. Junction Temperature

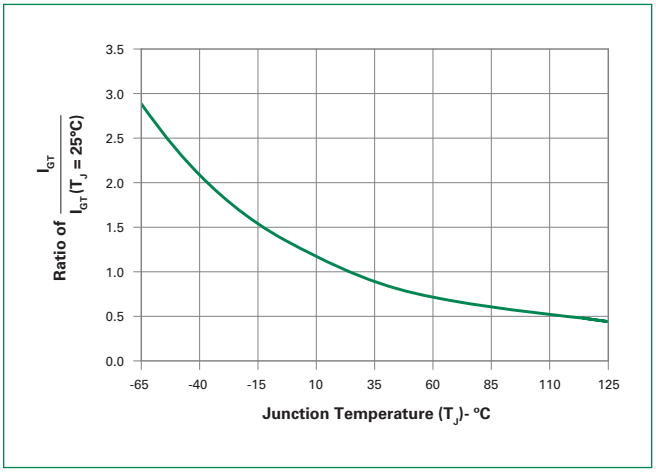

©2011 Littelfuse, Inc
Specifications are subject to change without notice.
Please refer to http://www.littelfuse.com for current information.

Figure 3: Normalized DC Holding Current vs. Junction Temperature

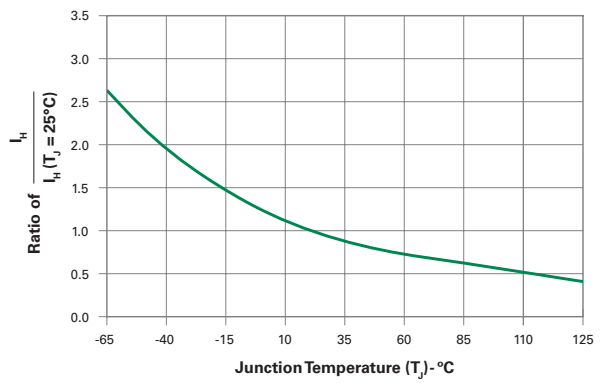

Figure 4: Normalized DC Gate Trigger Voltage for All Quadrants vs. Junction Temperature

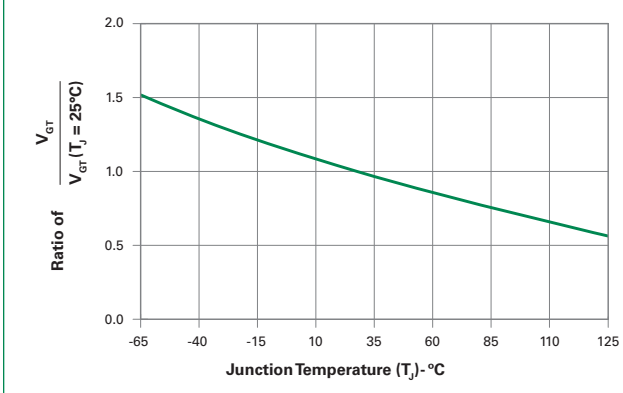

Figure 5: Power Dissipation (Typical) vs. RMS On-State Current

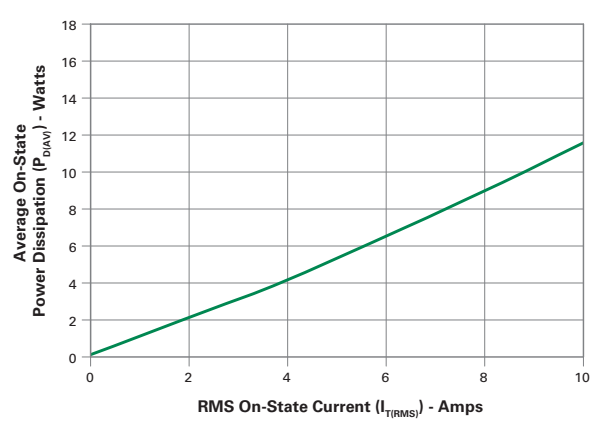

Figure 6: Maximum Allowable Case Temperature vs. On-State Current (Sensitive Triac)

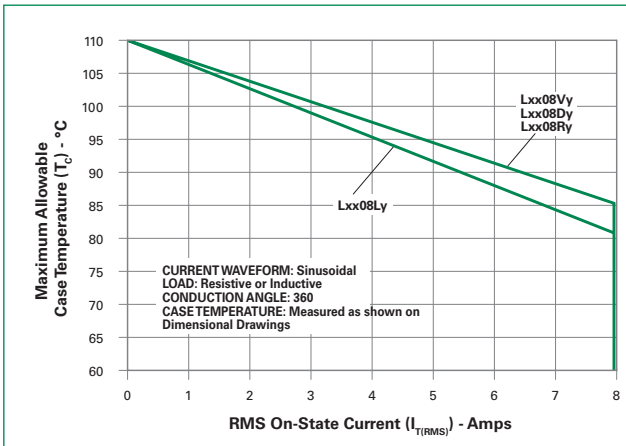

Figure 7: Maximum Allowable Case Temperature vs. On-State Current (Standard / Alternistor Triac)

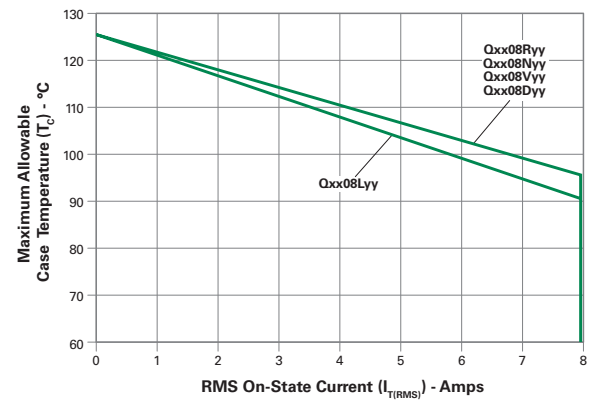

Figure 8: On-State Current vs. On-State Voltage (Typical)

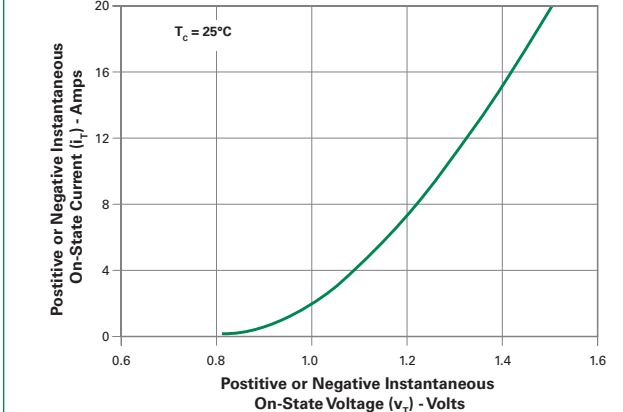

Note: xx = voltage, x = package, y = sensitivity, yy = type & sensitivity

©2011 Littelfuse, Inc
Specifications are subject to change without notice.
Please refer to http://www.littelfuse.com for current information.

Figure 9: Maximum Allowable Ambient Temperature vs. On-State Current

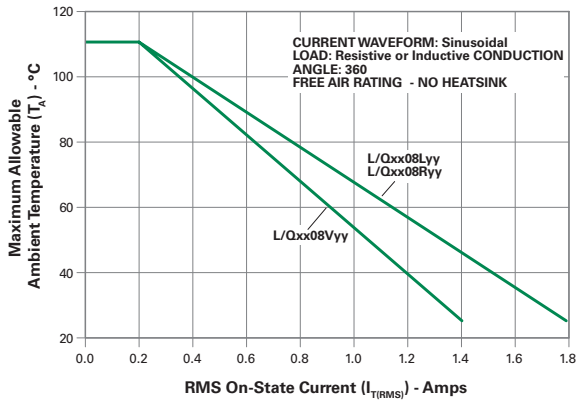

Figure 10: Surge Peak On-State Current vs. Number of Cycles

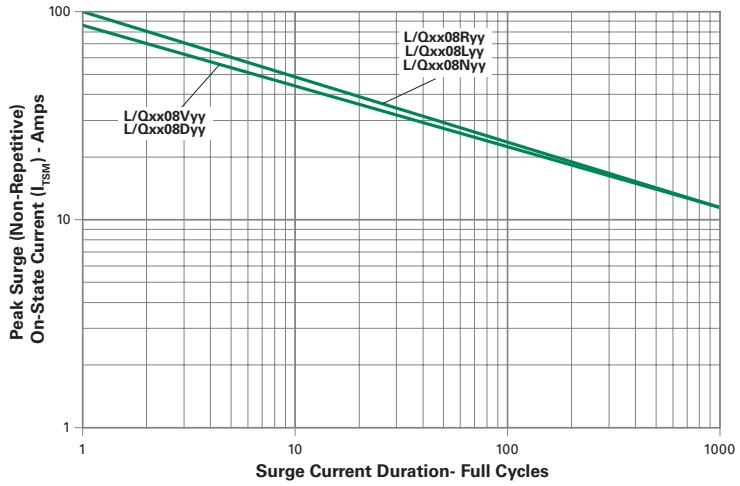

SUPPLY FREQUENCY: 60 Hz Sinusoidal
LOAD: Resistive
RMS On-State Current: [$I_{T(RMS)}$]: Maximum Rated Value at Specified Case Temperature

Notes:
1. Gate control may be lost during and immediately following surge current interval.
2. Overload may not be repeated until junction temperature has returned to steady-state rated value.

Note: xx = voltage, x = package, y = sensitivity, yy = type & sensitivity

©2011 Littelfuse, Inc
Specifications are subject to change without notice.
Please refer to http://www.littelfuse.com for current information.

Soldering Parameters

Reflow Condition		Pb – Free assembly
Pre Heat	-Temperature Min ($T_{s(min)}$)	150°C
	-Temperature Max ($T_{s(max)}$)	200°C
	-Time (min to max) (t_s)	60 – 180 secs
Average ramp up rate (Liquidus Temp) (T_L) to peak		5°C/second max
$T_{S(max)}$ to T_L - Ramp-up Rate		5°C/second max
Reflow	-Temperature (T_L) (Liquidus)	217°C
	-Temperature (t_L)	60 – 150 seconds
Peak Temperature (T_P)		$260^{+0/-5}$ °C
Time within 5°C of actual peak Temperature (t_p)		20 – 40 seconds
Ramp-down Rate		5°C/second max
Time 25°C to peak Temperature (T_P)		8 minutes Max.
Do not exceed		280°C

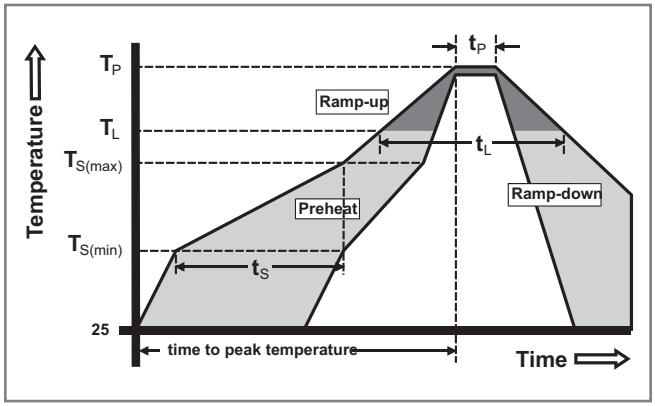

Physical Specifications

Terminal Finish	100% Matte Tin-plated
Body Material	UL recognized epoxy meeting flammability classification 94V-0
Terminal Material	Copper Alloy

Design Considerations

Careful selection of the correct device for the application's operating parameters and environment will go a long way toward extending the operating life of the Thyristor. Good design practice should limit the maximum continuous current through the main terminals to 75% of the device rating. Other ways to ensure long life for a power discrete semiconductor are proper heat sinking and selection of voltage ratings for worst case conditions. Overheating, overvoltage (including dv/dt), and surge currents are the main killers of semiconductors. Correct mounting, soldering, and forming of the leads also help protect against component damage.

Environmental Specifications

Test	Specifications and Conditions
AC Blocking (V_{DRM})	MIL-STD-750, M-1040, Cond A Applied Peak AC voltage @ 125°C for 1008 hours
Temperature Cycling	MIL-STD-750, M-1051, 100 cycles; -40°C to +150°C; 15-min dwell-time
Temperature/ Humidity	EIA / JEDEC, JESD22-A101 1008 hours; 320V - DC: 85°C; 85% rel humidity
High Temp Storage	MIL-STD-750, M-1031, 1008 hours; 150°C
Low-Temp Storage	1008 hours; -40°C
Thermal Shock	MIL-STD-750, M-1056 10 cycles; 0°C to 100°C; 5-min dwell-time at each temperature; 10 sec (max) transfer time between temperature
Autoclave	EIA / JEDEC, JESD22-A102 168 hours (121°C at 2 ATMs) and 100% R/H
Resistance to Solder Heat	MIL-STD-750 Method 2031
Solderability	ANSI/J-STD-002, category 3, Test A
Lead Bend	MIL-STD-750, M-2036 Cond E

©2011 Littelfuse, Inc
Specifications are subject to change without notice.
Please refer to http://www.littelfuse.com for current information.

Dimensions — TO-220AB (R-Package) — Non-Isolated Mounting Tab Common with Center Lead

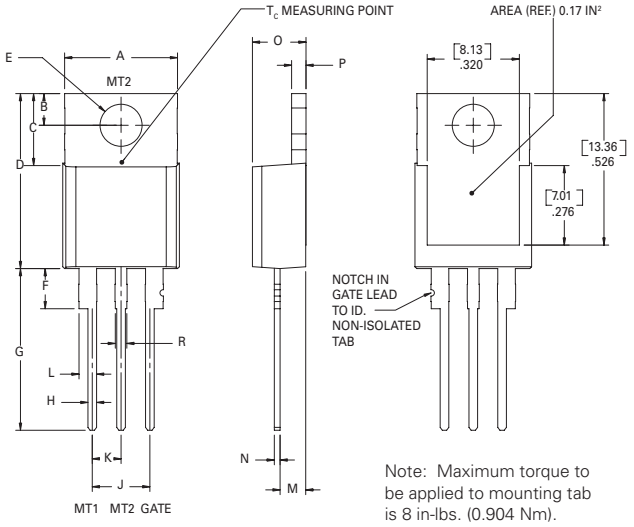

Note: Maximum torque to be applied to mounting tab is 8 in-lbs. (0.904 Nm).

Dimension	Inches		Millimeters	
	Min	Max	Min	Max
A	0.380	0.420	9.65	10.67
B	0.105	0.115	2.67	2.92
C	0.230	0.250	5.84	6.35
D	0.590	0.620	14.99	15.75
E	0.142	0.147	3.61	3.73
F	0.110	0.130	2.79	3.30
G	0.540	0.575	13.72	14.61
H	0.025	0.035	0.64	0.89
J	0.195	0.205	4.95	5.21
K	0.095	0.105	2.41	2.67
L	0.060	0.075	1.52	1.91
M	0.085	0.095	2.16	2.41
N	0.018	0.024	0.46	0.61
O	0.178	0.188	4.52	4.78
P	0.045	0.060	1.14	1.52
R	0.038	0.048	0.97	1.22

Dimensions — TO-220AB (L-Package) — Isolated Mounting Tab

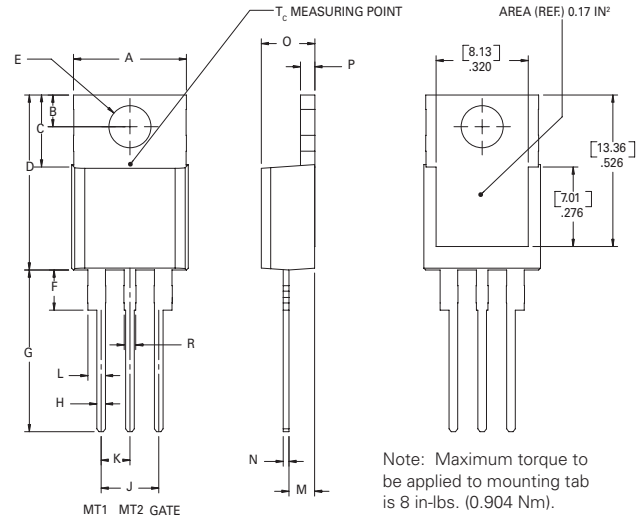

Note: Maximum torque to be applied to mounting tab is 8 in-lbs. (0.904 Nm).

Dimension	Inches		Millimeters	
	Min	Max	Min	Max
A	0.380	0.420	9.65	10.67
B	0.105	0.115	2.67	2.92
C	0.230	0.250	5.84	6.35
D	0.590	0.620	14.99	15.75
E	0.142	0.147	3.61	3.73
F	0.110	0.130	2.79	3.30
G	0.540	0.575	13.72	14.61
H	0.025	0.035	0.64	0.89
J	0.195	0.205	4.95	5.21
K	0.095	0.105	2.41	2.67
L	0.060	0.075	1.52	1.91
M	0.085	0.095	2.16	2.41
N	0.018	0.024	0.46	0.61
O	0.178	0.188	4.52	4.78
P	0.045	0.060	1.14	1.52
R	0.038	0.048	0.97	1.22

©2011 Littelfuse, Inc
Specifications are subject to change without notice.
Please refer to http://www.littelfuse.com for current information.

Dimensions — TO-263AB (N-Package) — D²-PAK Surface Mount

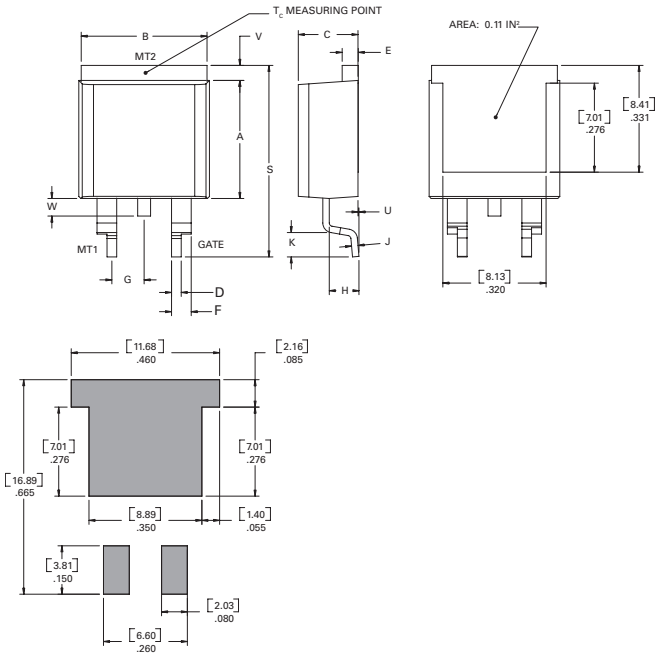

Dimension	Inches		Millimeters	
	Min	Max	Min	Max
A	0.360	0.370	9.14	9.40
B	0.380	0.420	9.65	10.67
C	0.178	0.188	4.52	4.78
D	0.025	0.035	0.64	0.89
E	0.045	0.060	1.14	1.52
F	0.060	0.075	1.52	1.91
G	0.095	0.105	2.41	2.67
H	0.092	0.102	2.34	2.59
J	0.018	0.024	0.46	0.61
K	0.090	0.110	2.29	2.79
S	0.590	0.625	14.99	15.88
V	0.035	0.045	0.89	1.14
U	0.002	0.010	0.05	0.25
W	0.040	0.070	1.02	1.78

Dimensions — TO-251AA (V-Package) — V-PAK Through Hole

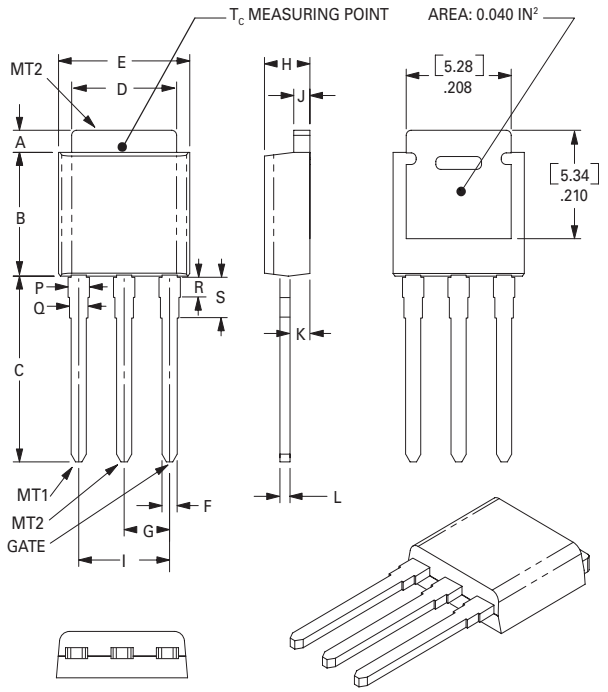

Dimension	Inches			Millimeters		
	Min	Typ	Max	Min	Typ	Max
A	0.040	0.044	0.050	1.02	1.11	1.27
B	0.235	0.242	0.245	5.97	6.15	6.22
C	0.350	0.361	0.375	8.89	9.18	9.53
D	0.205	0.208	0.213	5.21	5.29	5.41
E	0.255	0.262	0.265	6.48	6.66	6.73
F	0.027	0.031	0.033	0.69	0.80	0.84
G	0.087	0.090	0.093	2.21	2.28	2.36
H	0.085	0.092	0.095	2.16	2.34	2.41
I	0.176	0.180	0.184	4.47	4.57	4.67
J	0.018	0.020	0.023	0.46	0.51	0.58
K	0.038	0.040	0.044	0.97	1.01	1.12
L	0.018	0.020	0.023	0.46	0.52	0.58
P	0.042	0.047	0.052	1.06	1.20	1.32
Q	0.034	0.039	0.044	0.86	1.00	1.11
R	0.034	0.039	0.044	0.86	1.00	1.11
S	0.074	0.079	0.084	1.86	2.00	2.11

©2011 Littelfuse, Inc
Specifications are subject to change without notice.
Please refer to http://www.littelfuse.com for current information.

Dimensions — TO-252AA (D-Package) — D-PAK Surface Mount

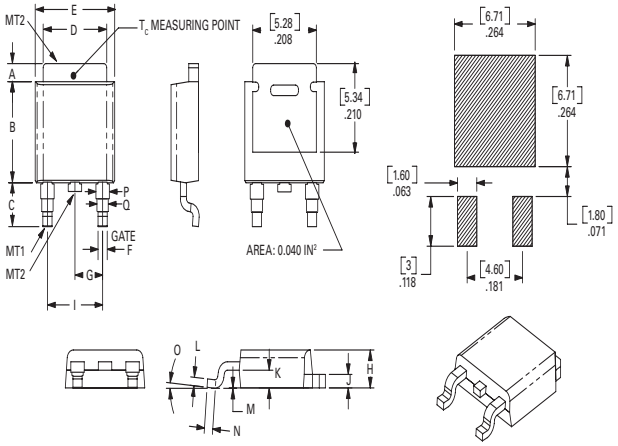

Dimension	Inches			Millimeters		
	Min	Typ	Max	Min	Typ	Max
A	0.040	0.043	0.050	1.02	1.09	1.27
B	0.235	0.243	0.245	5.97	6.16	6.22
C	0.106	0.108	0.113	2.69	2.74	2.87
D	0.205	0.208	0.213	5.21	5.29	5.41
E	0.255	0.262	0.265	6.48	6.65	6.73
F	0.027	0.031	0.033	0.69	0.80	0.84
G	0.087	0.090	0.093	2.21	2.28	2.36
H	0.085	0.092	0.095	2.16	2.33	2.41
I	0.176	0.179	0.184	4.47	4.55	4.67
J	0.018	0.020	0.023	0.46	0.51	0.58
K	0.038	0.040	0.044	0.97	1.02	1.12
L	0.018	0.020	0.023	0.46	0.51	0.58
M	0.000	0.000	0.004	0.00	0.00	0.10
N	0.021	0.026	0.027	0.53	0.67	0.69
O	0°	0°	5°	0°	0°	5°
P	0.042	0.047	0.052	1.06	1.20	1.32
Q	0.034	0.039	0.044	0.86	1.00	1.11

©2011 Littelfuse, Inc
Specifications are subject to change without notice.
Please refer to http://www.littelfuse.com for current information.

Product Selector

Part Number	Voltage (xx)				Gate Sensitivity Quadrants		Type	Package
	400V	600V	800V	1000V	I – II – III	IV		
Lxx08L6	X	X			5 mA	10 mA	Sensitive Triac	TO-220L
Lxx08D6	X	X			5 mA	10 mA	Sensitive Triac	TO-252 D-PAK
Lxx08R6	X	X			5mA	10mA	Sensitive Triac	TO-220R
Lxx08V6	X	X			5 mA	10 mA	Sensitive Triac	TO-251 V-PAK
Lxx08L8	X	X			10 mA	20 mA	Sensitive Triac	TO-220L
Lxx08D8	X	X			10 mA	20 mA	Sensitive Triac	TO-252 D-PAK
Lxx08R8	X	X			10mA	20mA	Sensitive Triac	TO-220R
Lxx08V8	X	X			10 mA	20 mA	Sensitive Triac	TO-251 V-PAK
Qxx08RH3	X	X			10 mA		Alternistor Triac	TO-220R
Qxx08VH3	X	X			10 mA		Alternistor Triac	TO-251 V-PAK
Qxx08DH3	X	X			10 mA		Alternistor Triac	TO-252 D-PAK
Qxx08L4	X				25 mA		Triac	TO-220L
Qxx08R4	X				25 mA		Triac	TO-220R
Qxx08N4	X				25 mA		Triac	TO-263 D^2-PAK
Qxx08LH4	X	X	X	X	35 mA		Alternistor Triac	TO-220L
Qxx08RH4	X	X	X	X	35 mA		Alternistor Triac	TO-220R
Qxx08VH4	X	X	X	X	35 mA		Alternistor Triac	TO-251 V-PAK
Qxx08DH4	X	X	X	X	35 mA		Alternistor Triac	TO-252 D-PAK
Qxx08NH4	X	X	X	X	35 mA		Alternistor Triac	TO-263 D^2-PAK
Qxx08L5		X	X	X	50 mA		Triac	TO-220L
Qxx08R5		X	X	X	50 mA		Triac	TO-220R
Qxx08N5		X	X	X	50 mA		Triac	TO-263 D^2-PAK

Packing Options

Part Number	Marking	Weight	Packing Mode	Base Quantity
L/Qxx08L/Ryy	L/Qxx08L/Ryy	2.2 g	Bulk	500
L/Qxx08L/RyyTP	L/Qxx08L/Ryy	2.2 g	Tube Pack	500 (50 per tube)
Qxx08NyyTP	Qxx08Nyy	1.6 g	Tube	500 (50 per tube)
Qxx08NyyRP	Qxx08Nyy	1.6 g	Embossed Carrier	500
L/Qxx08DyyTP	L/Qxx08Dyy	0.3 g	Tube	750 (75 per tube)
L/Qxx08DyyRP	L/Qxx08Dyy	0.3 g	Embossed Carrier	2500
L/Qxx08VyyTP	L/Qxx08Vyy	0.4 g	Tube	750 (75 per tube)

Note: xx = voltage, x = package, y = sensitivity, yy = type & sensitivity

©2011 Littelfuse, Inc
Specifications are subject to change without notice.
Please refer to http://www.littelfuse.com for current information.

TO-252 Embossed Carrier Reel Pack (RP) Specifications

Meets all EIA-481-2 Standards

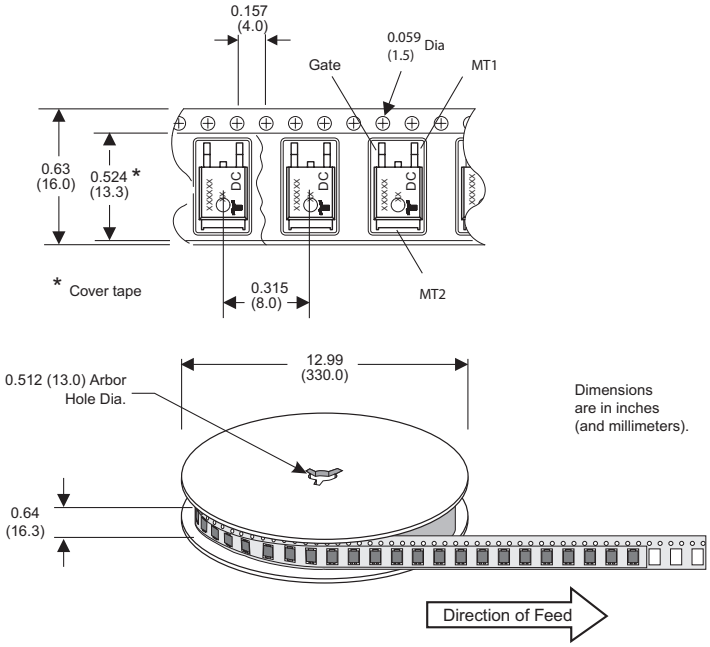

TO-263 Embossed Carrier Reel Pack (RP) Specifications

Meets all EIA-481-2 Standards

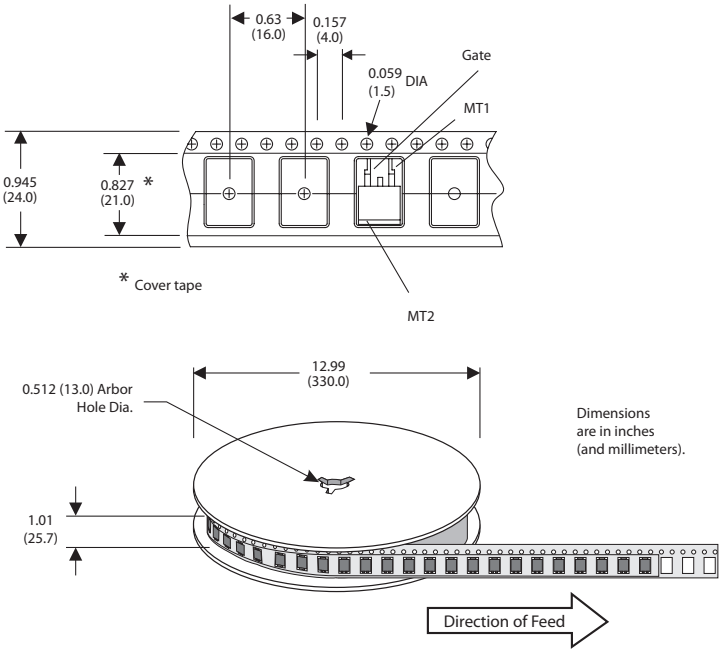

©2011 Littelfuse, Inc
Specifications are subject to change without notice.
Please refer to http://www.littelfuse.com for current information.

Part Numbering System

Q 60 08 L 5 56

DEVICE TYPE
L : Sensitive Triac
Q : Triac or Alternistor

VOLTAGE RATING
40 : 400V
60 : 600V
80 : 800V
K0 : 1000V

CURRENT
08: 8A

PACKAGE TYPE
L : TO-220 Isolated
R : TO-220 Non-Isolated
N : TO-263 (D^2PAK)
V : TO-251 (VPAK)
D : TO-252 (DPAK)

SENSITIVITY & TYPE
Sensitive Triac:
6 : 5 mA (QI, II, III)
10 mA (QIV)
8 : 10 mA (QI, II, III)
20 mA (QIV)
Standard Triac:
4 : 25 mA (QI, II, III)
5 : 50 mA (QI, II, III)
Alternistor Triac:
H3 : 10 mA (QI, II, III)
H4 : 35 mA (QI, II, III)

LEAD FORM DIMENSIONS
xx : Lead Form Option

Part Marking System

TO-220 AB – (R Package)
TO-263 AB – (N Package)

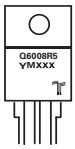

TO-252AA – (D Package)
TO-251AA – (V Package)

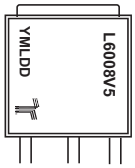

TO-220 AB – (L Package)

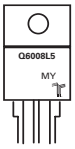

©2011 Littelfuse, Inc
Specifications are subject to change without notice.
Please refer to http://www.littelfuse.com for current information.

Общество с ограниченной ответственностью «МосЧип» ИНН 7719860671 / КПП 771901001
Адрес: 105318, г.Москва, ул.Щербаковская д.3, офис 1107

Данный компонент на территории Российской Федерации

Вы можете приобрести в компании MosChip.

Для оперативного оформления запроса Вам необходимо перейти по данной ссылке:

http://moschip.ru/get-element

Вы можете разместить у нас заказ для любого Вашего проекта, будь то серийное производство или разработка единичного прибора.

В нашем ассортименте представлены ведущие мировые производители активных и пассивных электронных компонентов.

Нашей специализацией является поставка электронной компонентной базы двойного назначения, продукции таких производителей как XILINX, Intel (ex.ALTERA), Vicor, Microchip, Texas Instruments, Analog Devices, Mini-Circuits, Amphenol, Glenair.

Сотрудничество с глобальными дистрибьюторами электронных компонентов, предоставляет возможность заказывать и получать с международных складов практически любой перечень компонентов в оптимальные для Вас сроки.

На всех этапах разработки и производства наши партнеры могут получить квалифицированную поддержку опытных инженеров.

Система менеджмента качества компании отвечает требованиям в соответствии с ГОСТ Р ИСО 9001, ГОСТ РВ 0015-002 и ЭС РД 009

Офис по работе с юридическими лицами:

105318, г.Москва, ул.Щербаковская д.3, офис 1107, 1118, ДЦ «Щербаковский»

Телефон: +7 495 668-12-70 (многоканальный)

Факс: +7 495 668-12-70 (доб.304)

E-mail: info@moschip.ru

Skype отдела продаж:
moschip.ru
moschip.ru_4
moschip.ru_6
moschip.ru_9