BTA08, BTB08
T810, T835

Snubberless™, logic level and standard 8 A Triacs

Features

- On-state rms current, $I_{T(RMS)}$ 8 A
- Repetitive peak off-state voltage, V_{DRM}/V_{RRM} 600 to 800 V
- Triggering gate current, $I_{GT\ (Q1)}$ 5 to 50 mA

Description

Available either in through-hole or surface-mount packages, the **BTA08, BTB08** and **T8** triac series is suitable for general purpose AC switching. They can be used as an ON/OFF function in applications such as static relays, heating regulation, induction motor starting circuits... or for phase control operation in light dimmers, motor speed controllers,...

The snubberless versions (BTA/BTB...W and T8 series) are specially recommended for use on inductive loads, thanks to their high commutation performances.

Logic level versions are designed to interface directly with low power drivers such as microcontrollers.

By using an internal ceramic pad, the BTA series provides voltage insulated tab (rated at 2500 V_{RMS}) complying with UL standards (file ref.: E81734).

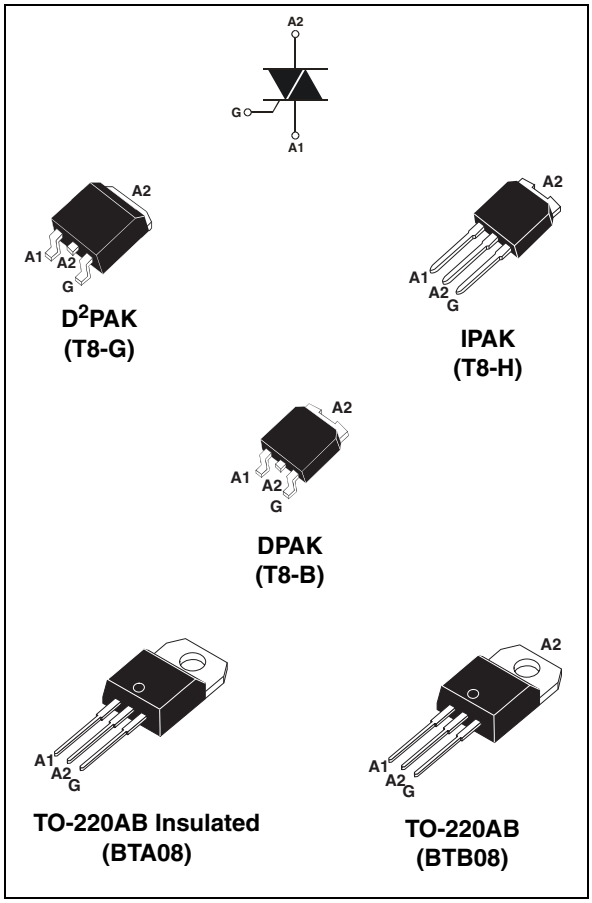

1 Characteristics

Table 1. Absolute maximum ratings

Symbol	Parameter			Value	Unit
$I_{T(RMS)}$	On-state rms current (full sine wave)	IPAK/D^{2}PAK/DPAK/ TO-220AB	T_c = 110 °C	8	A
		TO-220AB Ins.	T_c = 100 °C		
I_{TSM}	Non repetitive surge peak on-state current (full cycle, T_j initial = 25 °C)	F = 50 Hz	t = 20 ms	80	A
		F = 60 Hz	t = 16.7 ms	84	
I^2t	I^2t value for fusing	t_p = 10 ms		36	A^2s
dI/dt	Critical rate of rise of on-state current I_G = 2 x I_{GT} , $t_r \leq$ 100 ns	F = 120 Hz	T_j = 125 °C	50	A/µs
I_{GM}	Peak gate current	t_p = 20 µs	T_j = 125 °C	4	A
$P_{G(AV)}$	Average gate power dissipation		T_j = 125 °C	1	W
T_{stg} T_j	Storage junction temperature range Operating junction temperature range			- 40 to + 150 - 40 to + 125	°C

Table 2. Electrical characteristics (T_j = 25 °C, unless otherwise specified) Snubberless and logic level (3 quadrants)

Symbol	Test conditions	Quadrant		T8		BTA08 / BTB08				Unit
				T810	T835	TW	SW	CW	BW	
I_{GT} (1)	V_D = 12 V R_L = 30 Ω	I - II - III	MAX.	10	35	5	10	35	50	mA
V_{GT}		I - II - III	MAX.	1.3						V
V_{GD}	V_D = V_{DRM} R_L = 3.3 kΩ T_j = 125 °C	I - II - III	MIN.	0.2						V
I_H (2)	I_T = 100 mA		MAX.	15	35	10	15	35	50	mA
I_L	I_G = 1.2 I_{GT}	I - III	MAX.	25	50	10	25	50	70	mA
		II		30	60	15	30	60	80	
dV/dt (2)	V_D = 67 %V_{DRM} gate open T_j = 125 °C		MIN.	40	400	20	40	400	1000	V/µs
(dI/dt)c (2)	(dV/dt)c = 0.1 V/µs T_j = 125 °C		MIN.	5.4	-	3.5	5.4	-	-	A/ms
	(dV/dt)c = 10 V/µs T_j = 125 °C			2.8	-	1.5	2.98	-	-	
	Without snubber T_j = 125 °C			-	4.5	-	-	4.5	7	

Table 3. Standard (4 quadrants)

Symbol	Test conditions	Quadrant		BTA08 / BTB08		Unit
				C	B	
I_{GT} (1)	V_D = 12 V, R_L = 33 Ω	I - II - III IV	MAX.	25 50	50 100	mA
V_{GT}		ALL	MAX.	1.3		V
V_{GD}	$V_D = V_{DRM}$, R_L = 3.3 kΩ, T_j = 125 °C	ALL	MIN.	0.2		V
I_H (2)	I_T = 500 mA		MAX.	25	50	mA
I_L	$I_G = 1.2\ I_{GT}$	I - III - IV	MAX.	40	50	mA
		II		80	100	
dV/dt (2)	V_D = 67 %V_{DRM} gate open	T_j = 125 °C	MIN.	200	400	V/µs
(dV/dt)c (2)	(dI/dt)c = 5.3 A/ms	T_j = 125 °C	MIN.	5	10	V/µs

Table 4. Static characteristics

Symbol	Test conditions			Value	Unit
V_{TM} (1)	I_{TM} = 11 A, t_p = 380 µs	T_j = 25 °C	MAX.	1.55	V
V_{t0} (2)	Threshold voltage	T_j = 125 °C	MAX.	0.85	V
R_d (2)	Dynamic resistance	T_j = 125 °C	MAX.	50	mΩ
I_{DRM} I_{RRM}	$V_{DRM} = V_{RRM}$	T_j = 25 °C	MAX.	5	µA
		T_j = 125 °C		1	mA

1. minimum I_{GT} is guaranted at 5% of I_{GT} max.
2. for both polarities of A2 referenced to A1.

Table 5. Thermal resistance

Symbol	Parameter			Value	Unit
$R_{th(j-c)}$	Junction to case (AC)		IPAK / D^2PAK / DPAK / TO-220AB	1.6	°C/W
			TO-220AB Insulated	2.5	
$R_{th(j-a)}$	Junction to ambient	S = 1 cm^2	D^2PAK	45	°C/W
		S = 0.5 cm^2	DPAK	70	
			TO-220AB / TO-220AB Insulated	60	
			IPAK	100	

S = Copper surface under tab.

Figure 1. Maximum power dissipation versus rms on-state current (full cycle)

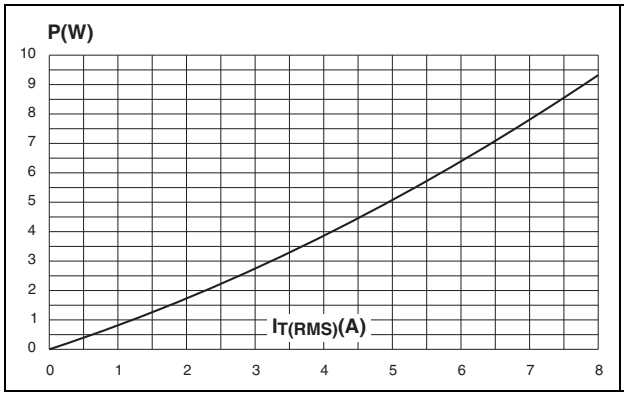

Figure 2. On-state rms current versus case temperature (full cycle)

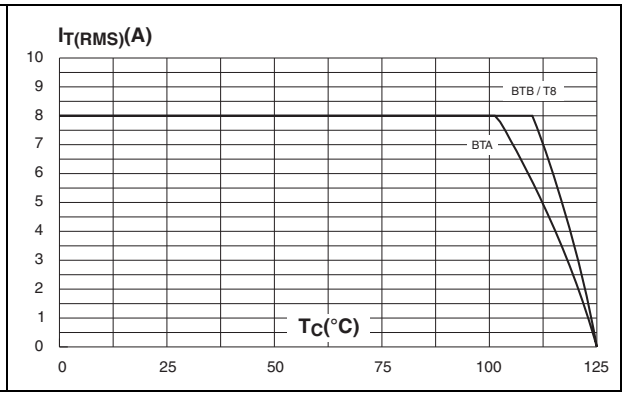

Figure 3. On-state rms current versus ambient temperature (full cycle)

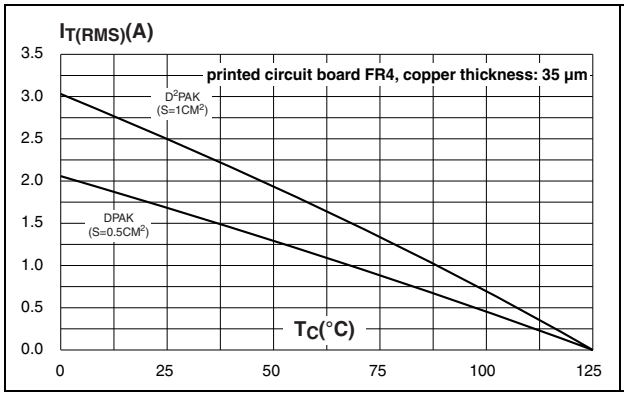

Figure 4. Relative variation of thermal impedance versus pulse duration

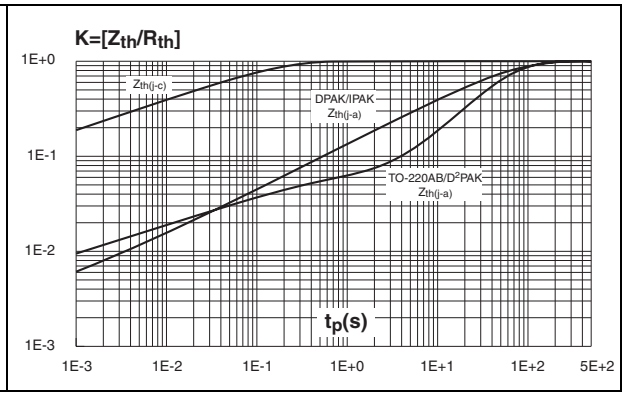

Figure 5. On-state characteristics (maximum values)

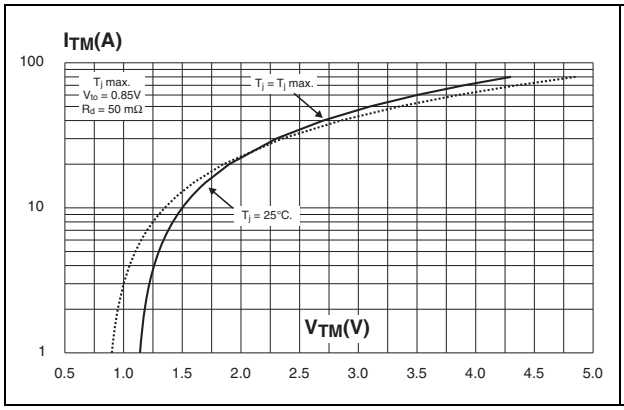

Figure 6. Surge peak on-state current versus number of cycles

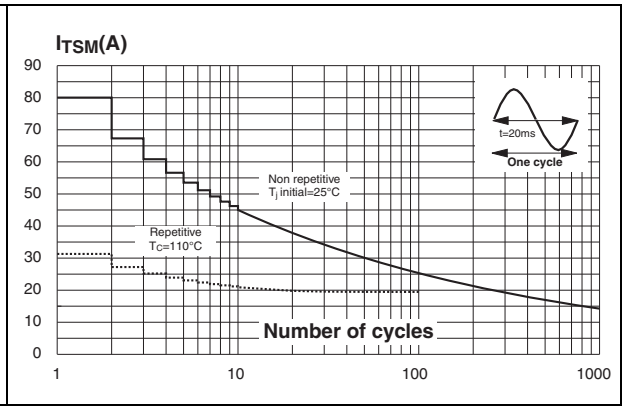

Figure 7. Non-repetitive surge peak on-state current for a sinusoidal

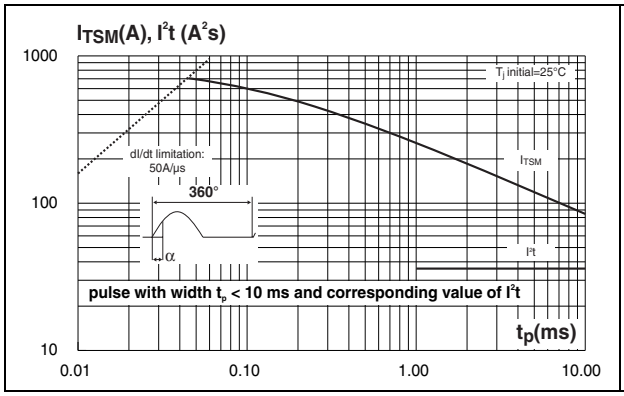

Figure 8. Relative variation of gate trigger current

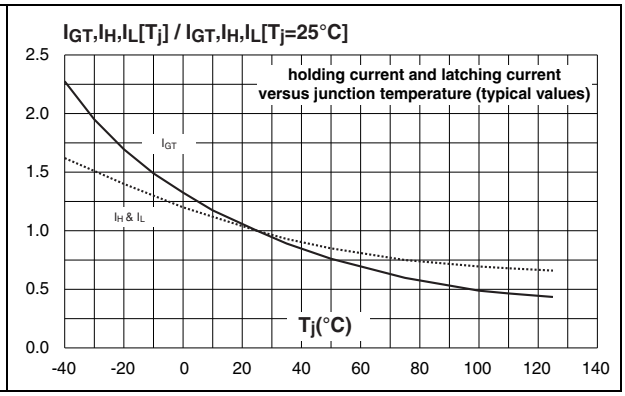

Figure 9. Relative variation of critical rate of decrease of main current versus (dV/dt)c (typical values)

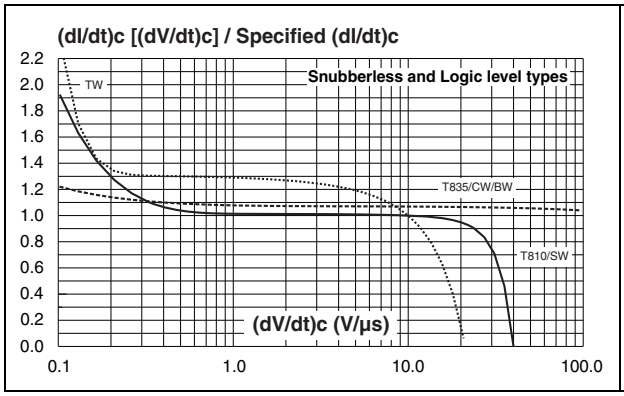

Figure 10. Relative variation of critical rate of decrease of main current versus (dV/dt)c (typical values)

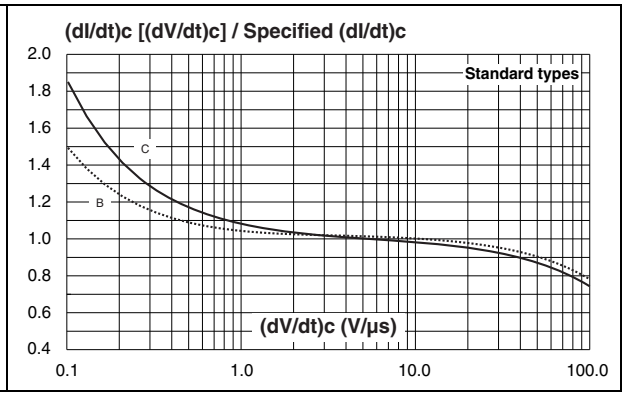

Figure 11. Relative variation of critical rate of decrease of main current versus junction temperature

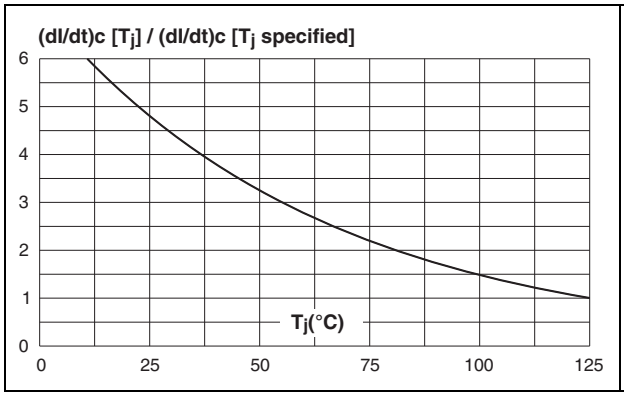

Figure 12. DPAK and D²PAK thermal resistance junction to ambient versus copper surface under tab

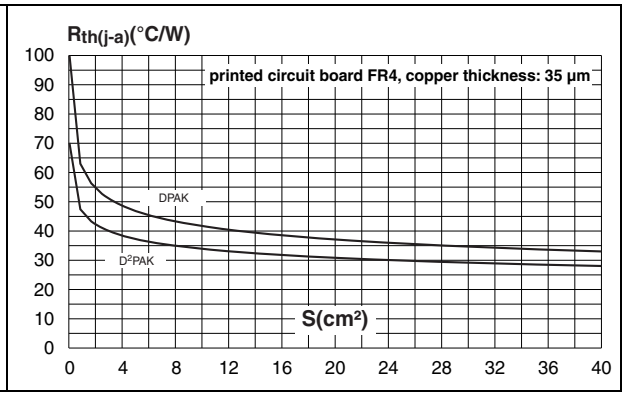

2 Package information

- Epoxy meets UL94, V0
- Lead-free packages

In order to meet environmental requirements, ST offers these devices in different grades of ECOPACK® packages, depending on their level of environmental compliance. ECOPACK® specifications, grade definitions and product status are available at: www.st.com. ECOPACK® is an ST trademark.

Table 6. D²PAK dimensions

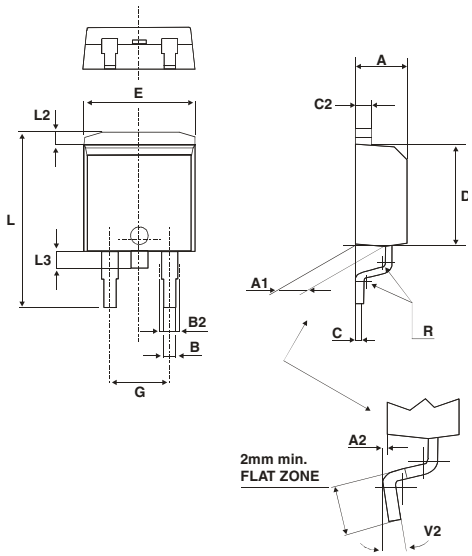

Ref.	Dimensions					
	Millimeters			Inches		
	Min.	Typ.	Max.	Min.	Typ.	Max.
A	4.30		4.60	0.169		0.181
A1	2.49		2.69	0.098		0.106
A2	0.03		0.23	0.001		0.009
B	0.70		0.93	0.027		0.037
B2	1.25	1.40		0.048	0.055	
C	0.45		0.60	0.017		0.024
C2	1.21		1.36	0.047		0.054
D	8.95		9.35	0.352		0.368
E	10.00		10.28	0.393		0.405
G	4.88		5.28	0.192		0.208
L	15.00		15.85	0.590		0.624
L2	1.27		1.40	0.050		0.055
L3	1.40		1.75	0.055		0.069
R	0.40			0.016		
V2	0°		8°	0°		8°

Figure 13. Footprint (dimensions in mm)

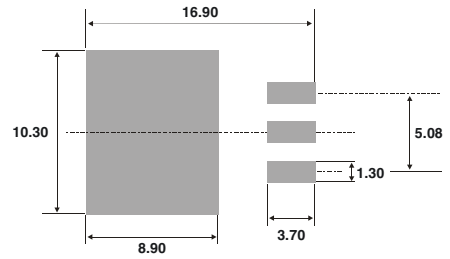

Table 7. DPAK dimensions

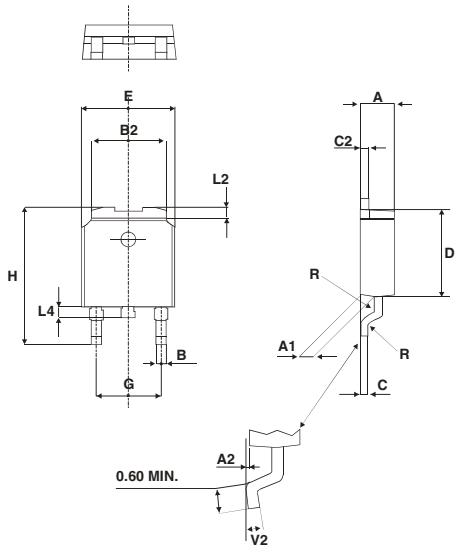

Ref.	Dimensions			
	Millimeters		Inches	
	Min.	Max.	Min.	Max.
A	2.20	2.40	0.086	0.094
A1	0.90	1.10	0.035	0.043
A2	0.03	0.23	0.001	0.009
B	0.64	0.90	0.025	0.035
B2	5.20	5.40	0.204	0.212
C	0.45	0.60	0.017	0.023
C2	0.48	0.60	0.018	0.023
D	6.00	6.20	0.236	0.244
E	6.40	6.60	0.251	0.259
G	4.40	4.60	0.173	0.181
H	9.35	10.10	0.368	0.397
L2	0.80 typ.		0.031 typ.	
L4	0.60	1.00	0.023	0.039
V2	0°	8°	0°	8°

Figure 14. Footprint (dimensions in mm)

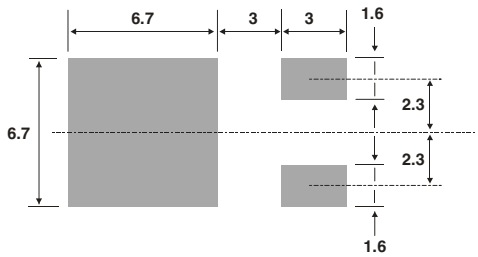

Table 8. IPAK dimensions

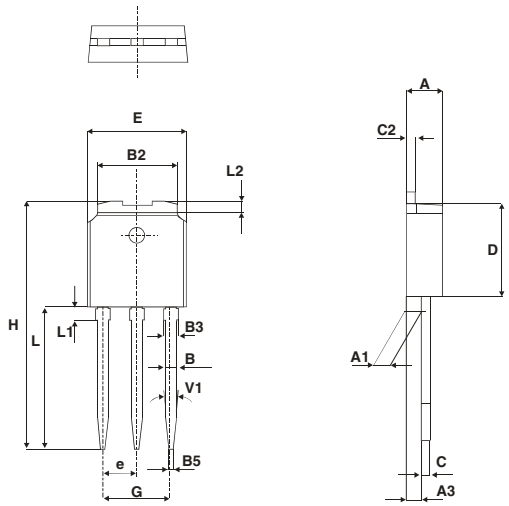

Ref.	Dimensions					
	Millimeters			Inches		
	Min.	Typ.	Max.	Min.	Typ.	Max.
A	2.20		2.40	0.086		0.094
A1	0.90		1.10	0.035		0.043
A3	0.70		1.30	0.027		0.051
B	0.64		0.90	0.025		0.035
B2	5.20		5.40	0.204		0.212
B3			0.95			0.037
B5		0.30			0.035	
C	0.45		0.60	0.017		0.023
C2	0.48		0.60	0.019		0.023
D	6		6.20	0.236		0.244
E	6.40		6.60	0.252		0.260
e		2.28			0.090	
G	4.40		4.60	0.173		0.181
H		16.10			0.634	
L	9		9.40	0.354		0.370
L1	0.8		1.20	0.031		0.047
L2		0.80	1		0.031	0.039
V1		10°			10°	

TO-220AB (NIns. and Ins. 20-up) dimensions

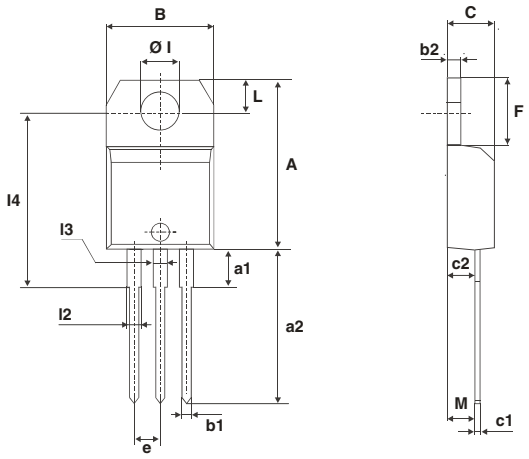

Ref.	Dimensions					
	Millimeters			Inches		
	Min.	Typ.	Max.	Min.	Typ.	Max.
A	15.20		15.90	0.598		0.625
a1		3.75			0.147	
a2	13.00		14.00	0.511		0.551
B	10.00		10.40	0.393		0.409
b1	0.61		0.88	0.024		0.034
b2	1.23		1.32	0.048		0.051
C	4.40		4.60	0.173		0.181
c1	0.49		0.70	0.019		0.027
c2	2.40		2.72	0.094		0.107
e	2.40		2.70	0.094		0.106
F	6.20		6.60	0.244		0.259
ØI	3.75		3.85	0.147		0.151
l4	15.80	16.40	16.80	0.622	0.646	0.661
L	2.65		2.95	0.104		0.116
l2	1.14		1.70	0.044		0.066
l3	1.14		1.70	0.044		0.066
M		2.60			0.102	

3 Ordering information

Figure 15. Ordering information scheme (BTA08 and BTB08 series)

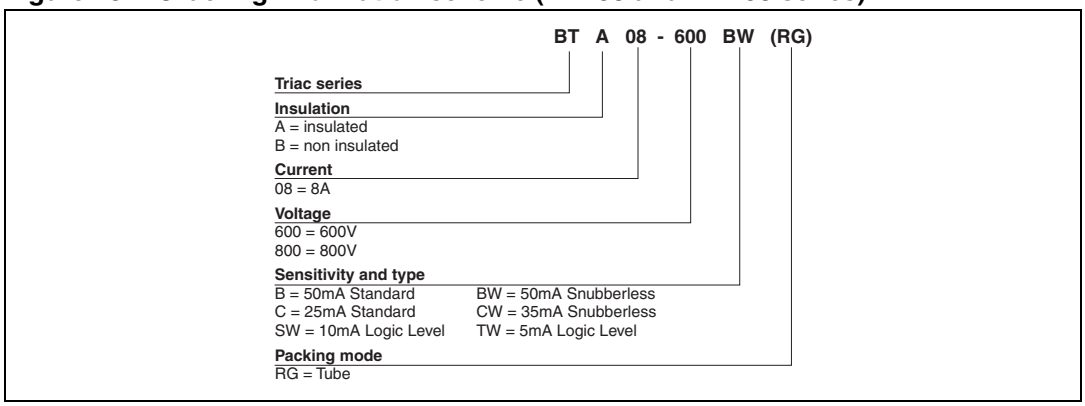

Figure 16. Ordering information scheme (T8 series)

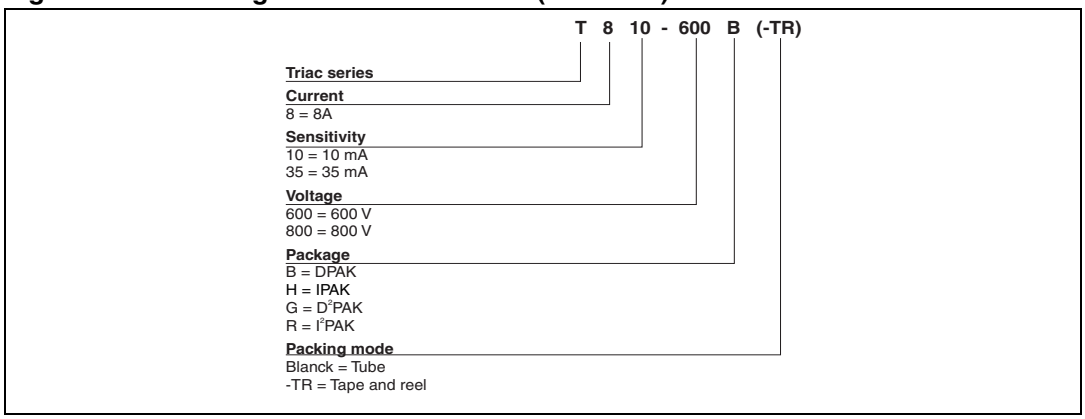

Table 9. Product Selector

Part Number	Voltage (xxx)		Sensitivity	Type	Package
	600 V	800 V			
BTA/BTB08-xxxB	X	X	50 mA	Standard	TO-220AB
BTA/BTB08-xxxBW	X	X	50 mA	Snubberless	TO-220AB
BTA/BTB08-xxxC	X	X	25 mA	Standard	TO-220AB
BTA/BTB08-xxxCW	X	X	35 mA	Snubberless	TO-220AB
BTA/BTB08-xxxSW	X	X	10 mA	Logic level	TO-220AB
BTA/BTB08-xxxTW	X	X	5 mA	Logic Level	TO-220AB
T810-xxxG	X	X	10 mA	Logic Level	D^2PAK
T810-xxxH	X	X	10 mA	Logic Level	IPAK
T835-xxxB	X	X	35 mA	Snubberless	DPAK
T835-xxxG	X	X	35 mA	Snubberless	D^2PAK
T835-xxxH	X	X	35 mA	Snubberless	IPAK

BTB: non insulated TO-220AB package

4 Ordering information

Table 10. Ordering information

Order code	Marking	Package	Weight	Base qty	Delivery mode
BTA/BTB08-xxxyzRG	BTA/BTB08-xxxyz	TO-220AB	2.3 g	50	Tube
T8yy-xxxG	T8yyxx	D^2PAK	1.5 g	50	Tube
T8yy-xxxG-TR	T8yyxx			1000	Tape and reel
T8yy-xxxB	T8yyxx	DPAK	0.3 g	75	Tube
T8yy-xxxB-TR	T8yyxx			2500	Tape and reel
T8yy-xxxH	T8yyxx	IPAK	0.4 g	75	Tube

xxx = voltage, yy = sensitivity, z = type

5 Revision history

Table 11. Document revision history

Date	Revision	Changes
Apr-2002	5A	Last update.
13-Feb-2006	6	TO-220AB delivery mode changed from bulk to tube. ECOPACK statement added.
10-Mar-2010	7	Updated ECOPACK statement and *Figure 16.*

Please Read Carefully:

Information in this document is provided solely in connection with ST products. STMicroelectronics NV and its subsidiaries (“ST”) reserve the right to make changes, corrections, modifications or improvements, to this document, and the products and services described herein at any time, without notice.

All ST products are sold pursuant to ST’s terms and conditions of sale.

Purchasers are solely responsible for the choice, selection and use of the ST products and services described herein, and ST assumes no liability whatsoever relating to the choice, selection or use of the ST products and services described herein.

No license, express or implied, by estoppel or otherwise, to any intellectual property rights is granted under this document. If any part of this document refers to any third party products or services it shall not be deemed a license grant by ST for the use of such third party products or services, or any intellectual property contained therein or considered as a warranty covering the use in any manner whatsoever of such third party products or services or any intellectual property contained therein.

UNLESS OTHERWISE SET FORTH IN ST’S TERMS AND CONDITIONS OF SALE ST DISCLAIMS ANY EXPRESS OR IMPLIED WARRANTY WITH RESPECT TO THE USE AND/OR SALE OF ST PRODUCTS INCLUDING WITHOUT LIMITATION IMPLIED WARRANTIES OF MERCHANTABILITY, FITNESS FOR A PARTICULAR PURPOSE (AND THEIR EQUIVALENTS UNDER THE LAWS OF ANY JURISDICTION), OR INFRINGEMENT OF ANY PATENT, COPYRIGHT OR OTHER INTELLECTUAL PROPERTY RIGHT.

UNLESS EXPRESSLY APPROVED IN WRITING BY AN AUTHORIZED ST REPRESENTATIVE, ST PRODUCTS ARE NOT RECOMMENDED, AUTHORIZED OR WARRANTED FOR USE IN MILITARY, AIR CRAFT, SPACE, LIFE SAVING, OR LIFE SUSTAINING APPLICATIONS, NOR IN PRODUCTS OR SYSTEMS WHERE FAILURE OR MALFUNCTION MAY RESULT IN PERSONAL INJURY, DEATH, OR SEVERE PROPERTY OR ENVIRONMENTAL DAMAGE. ST PRODUCTS WHICH ARE NOT SPECIFIED AS "AUTOMOTIVE GRADE" MAY ONLY BE USED IN AUTOMOTIVE APPLICATIONS AT USER’S OWN RISK.

Resale of ST products with provisions different from the statements and/or technical features set forth in this document shall immediately void any warranty granted by ST for the ST product or service described herein and shall not create or extend in any manner whatsoever, any liability of ST.

ST and the ST logo are trademarks or registered trademarks of ST in various countries.

Information in this document supersedes and replaces all information previously supplied.

The ST logo is a registered trademark of STMicroelectronics. All other names are the property of their respective owners.

© 2010 STMicroelectronics - All rights reserved

STMicroelectronics group of companies

Australia - Belgium - Brazil - Canada - China - Czech Republic - Finland - France - Germany - Hong Kong - India - Israel - Italy - Japan - Malaysia - Malta - Morocco - Philippines - Singapore - Spain - Sweden - Switzerland - United Kingdom - United States of America

www.st.com

Общество с ограниченной ответственностью «МосЧип» ИНН 7719860671 / КПП 771901001
Адрес: 105318, г.Москва, ул.Щербаковская д.3, офис 1107

Данный компонент на территории Российской Федерации

Вы можете приобрести в компании MosChip.

Для оперативного оформления запроса Вам необходимо перейти по данной ссылке:

http://moschip.ru/get-element

Вы можете разместить у нас заказ для любого Вашего проекта, будь то серийное производство или разработка единичного прибора.

В нашем ассортименте представлены ведущие мировые производители активных и пассивных электронных компонентов.

Нашей специализацией является поставка электронной компонентной базы двойного назначения, продукции таких производителей как XILINX, Intel (ex.ALTERA), Vicor, Microchip, Texas Instruments, Analog Devices, Mini-Circuits, Amphenol, Glenair.

Сотрудничество с глобальными дистрибьюторами электронных компонентов, предоставляет возможность заказывать и получать с международных складов практически любой перечень компонентов в оптимальные для Вас сроки.

На всех этапах разработки и производства наши партнеры могут получить квалифицированную поддержку опытных инженеров.

Система менеджмента качества компании отвечает требованиям в соответствии с ГОСТ Р ИСО 9001, ГОСТ РВ 0015-002 и ЭС РД 009

Офис по работе с юридическими лицами:

105318, г.Москва, ул.Щербаковская д.3, офис 1107, 1118, ДЦ «Щербаковский»

Телефон: +7 495 668-12-70 (многоканальный)

Факс: +7 495 668-12-70 (доб.304)

E-mail: info@moschip.ru

Skype отдела продаж:
moschip.ru
moschip.ru_4
moschip.ru_6
moschip.ru_9