MegaMod™ & MegaMod Jr.™ Family

25 to 600 Watts DC-DC Converters Single, Dual, Triple Output Chassis Mount

Features & Benefits

- RoHS compliant (VE versions)
- Inputs: 10 to 400V_{DC}
- Any output, 1 to 95V_{DC}
- cULus, cTÜVus, CE Marked
- 80 – 90% Efficiency (Typical)
- Up to 27 W/In^3
- 1 Up:
  2.58" x 2.5" x 0.62" (Junior)
  4.9" x 2.5" x 0.62" (Full Size)
- 2 Up:
  2.58" x 4.9" x 0.62" (Junior)
  4.9" x 4.9" x 0.62" (Full Size)
- 3 Up:
  2.58" x 7.3" x 0.62" (Junior)
  4.9" x 7.3" x 0.62" (Full Size)
- Low noise ZCS power architecture
- Booster versions available for expanded output power – full size only (add B to part number Example: VI-LBxx-xx)

Product Highlights

Vicor's MegaMod and MegaMod Jr. Families of single, dual and triple output DC-DC converters provide power system designers with cost effective, high performance, off-the-shelf solutions to applications that might otherwise require a custom supply.

Incorporating standard VI-200 or VI-J00 Family converters in rugged, chassis mount packages, MegaMod and MegaMod Jr.'s can be ordered with single, dual or triple outputs, having a combined output power of up to 600W. Totally isolated outputs eliminate efficiency penalties and output interaction problems.

For on-line product configuration visit:

MegaMod / MI-MegaMod DC-DC Converters Configurator

Configuration Chart

Substitute VE– for VI– for RoHS compliant versions

Full-Size Modules – MegaMod			Junior-Size Modules – MegaMod Jr		
Configuration	Output Power	# of Modules	Configuration	Output Power	# of Modules
Single Output			**Single Output**		
VI-L ▪ ▪ - ▪ ▪	50 – 200W	1	VI-LJ ▪ ▪ - ▪ ▪	25 – 100W	1
VI-M ▪ ▪ - ▪ ▪	100 – 400W	2			
VI-N ▪ ▪ - ▪ ▪	300 – 600W	3			
Dual Output			**Dual Output**		
VI-P ▪ ▪ ▪ - ▪ ▪ ▪	100 – 400W	2	VI-PJ ▪ ▪ ▪ - ▪ ▪ ▪	50 – 200W	2
VI-Q ▪ ▪ ▪ - ▪ ▪ ▪	150 – 600W	3			
Triple Output			**Triple Output**		
VI-R ▪ ▪ ▪ ▪ - ▪ ▪ ▪ ▪	150 – 600W	3	VI-RJ ▪ ▪ ▪ ▪ - ▪ ▪ ▪ ▪	75 – 300W	3

Input Voltage

Nominal	Input Range Full Power	Maximum Power (see chart below) MegaMod	MegaMod Jr.	Low Line 75% Max Power	Transient[a]
0 = 12V[b][c]	10 – 20V	(4)	(1)	n/a	22
V = 24V[b][c]	10 – 36V	(2)	(11)	n/a	n/a
1 = 24V[d]	21 – 32V	(8)	(6)	18V	36
W = 24V[d]	18 – 36V	(8)	(6)	n/a	n/a
2 = 36V	21 – 56V	(6)	(1)	18V	60
3 = 48V	42 – 60V	(10)	(6)	36V	72
N = 48V	36 – 76V	(10)	(5)	n/a	n/a
4 = 72V	55 – 100V	(9)	(6)	45V	110
T = 110V	66 – 160V	(8)	(5)	n/a	n/a
5 = 150V	100 – 200V	(9)	(6)	85V	215
6 = 300V	200 – 400V	(10)	(6)	170V	425
7 = 150/300V	100 – 375V	(5)	(1)	90V	n/a

Max. Output Per Module	5 – 7.5V Outputs	>7.5V Outputs	<5V Outputs
(1)	50W	75W	10A
(2)	50W[e]	75W	15A
(4)	75W	75W	15A
(5)	75W	100W	20A
(6)	100W[f]	100W	20A
(7)	100W	150W	30A
(8)	150W	150W	30A
(9)	150W	200W	40A
(10)	200W	200W	40A
(11)	50W	50W	10A

Output Voltage

Z =	2V
Y =	3.3V
0 =	5V
X =	5.2V
W =	5.5V
V =	5.8V
T =	6.5V
R =	7.5V
M =	10V
1 =	12V
P =	13.8V
2 =	15V
N =	18.5V
3 =	24V
L =	28V
J =	36V
K =	40V
4 =	48V
H =	52V
F =	72V
D =	85V
B =	95V

[a] Transient voltage for 1 second.
[b] Single output configurations of 225W are limited to +55°C ambient and are available by special order.
[c] Dual and triple output configurations totaling 225W are limited to +55°C ambient.
[d] Single, dual, and triple output configurations totaling 450W are limited to +55°C.
[e] 7.5V output is 75W
[f] 6.5V and 7.5V output is 75W

Product Grade Temperature (°C)

MegaMod	MegaMod Jr.
E = –10 to +85	–10 to +100
C = –25 to +85	–25 to +100
I = –40 to +85	–40 to +100
M = –55 to +85	–55 to +100

Refers to Baseplate Temperature

Output Power/Current

MegaMod		MegaMod Jr.	
$V_{OUT} \geq 5V$	$V_{OUT} < 5V$	$V_{OUT} \geq 5V$	$V_{OUT} < 5V$
Y = 50W	Y = 10A	Z = 25W	Z = 5A
X = 75W	X = 15A	Y = 50W	Y = 10A
W = 100W	W = 20A	X = 75W	X = 15A
V = 150W	V = 30A	W = 100W	W = 20A
U = 200W	U = 40A		

Output Power/Current

$V_{OUT} \geq 5V$	$V_{OUT} < 5V$
W = 100W	W = 20A
V = 150W	V = 30A
U = 200W	U = 40A
S = 300W	S = 60A
Q = 400W	Q = 80A

Output Power/Current

$V_{OUT} \geq 5V$	$V_{OUT} < 5V$
S = 300W	S = 60A
P = 450W	P = 90A
M = 600W	M = 120A

MegaMod Specifications

(typical at T_{BP} = 25°C, nominal line, 75% load, unless otherwise specified)

INPUT SPECIFICATIONS

	MegaMod (E-Grade)			MegaMod (C-, I-, M-Grade)				
Parameter	**Min**	**Typ**	**Max**	**Min**	**Typ**	**Max**	**Unit**	**Test Conditions**
Inrush charge		$120x10^{-6}$			$120x10^{-6}$	$200x10^{-6}$	Coulombs	Nom. line, per module
Input reflected ripple current – pp		10%			10%		I_{IN}	Nom. line, full load
Input ripple rejection		$25+20\text{Log}\left(\frac{V_{IN}}{V_{OUT}}\right)$			$30+20\text{Log}\left(\frac{V_{IN}}{V_{OUT}}\right)$		dB	120Hz, nom. line
					$20+20\text{Log}\left(\frac{V_{IN}}{V_{OUT}}\right)$		dB	2400Hz, nom. line
No load power dissipation		1.35	2		1.35	2	Watts	Per module

OUTPUT SPECIFICATIONS

	MegaMod (E-Grade)			MegaMod (C-, I-, M-Grade)				
Parameter	**Min**	**Typ**	**Max**	**Min**	**Typ**	**Max**	**Units**	**Test Conditions**
Setpoint accuracy		1%	2%		0.5%	1%	V_{NOM}	
Load / line regulation			0.5%		0.05%	0.2%	V_{NOM}	LL to HL, 10% to FL
			1%		0.2%	0.5%	V_{NOM}	LL to HL, NL to 10%
Output temperature drift		0.02			0.01	0.02	% / °C	Over rated temp.
Long term drift		0.02			0.02		%/1K hours	
Output ripple - pp								
2V, 3.3V			150		60	100	mV	20MHz bandwidth
5V			5%		2%	3%	V_{NOM}	20MHz bandwidth
10 – 95V			3%		0.75%	1.5%	V_{NOM}	20MHz bandwidth
Output voltage trimming[a]	50%		110%	50%		110%	V_{NOM}	
Total remote sense compensation	0.5			0.5			Volts	0.25V max. neg. leg
OVP setpoint[b]		125%		115%	125%	135%	V_{NOM}	Recycle power
Current limit	105%		135%	105%		125%	I_{NOM}	Automatic restart
Short circuit current[c]	20%		140%	20%		130%	I_{NOM}	

[a] 10V to 15V outputs, or "V" input range have standard trim range ±10%. Consult factory for wider trim range. 95V output -50 + 0% trim range.
[b] 131% typical for booster modules.
[c] Output voltages of 5V or less incorporate foldback current limiting; outputs of 10V and above contain straight-line limiting.

CONTROL PIN SPECIFICATIONS

	MegaMod (E-Grade)			MegaMod (C-, I-, M-Grade)				
Parameter	**Min**	**Typ**	**Max**	**Min**	**Typ**	**Max**	**Units**	**Test Conditions**
Gate out impedance		50			50		Ohms	
Gate in impedance		10^3			10^3		Ohms	
Gate in open circuit voltage		6			6		Volts	Use open collector
Gate in low threshold	0.65			0.65			Volts	
Gate in low current			6			6	mA	
Power sharing accuracy	0.95		1.05	0.95		1.05		

MegaMod Specifications (Cont.)

DIELECTRIC WITHSTAND CHARACTERISTICS

	MegaMod (E-Grade)			MegaMod (C-, I-, M-Grade)				
Parameter	**Min**	**Typ**	**Max**	**Min**	**Typ**	**Max**	**Unit**	**Test Conditions**
Input to output	3,000			3,000			V_{RMS}	Baseplate earthed
Output to baseplate	500			500			V_{RMS}	
Input to baseplate	1,500			1,500			V_{RMS}	

THERMAL CHARACTERISTICS

	MegaMod (E-Grade)			MegaMod (C-, I-, M-Grade)				
Parameter	**Min**	**Typ**	**Max**	**Min**	**Typ**	**Max**	**Units**	**Test Conditions**
Efficiency		78-88%			80 – 90%			
Baseplate to chassis		0.1			0.1		°C/Watt	
Thermal Shutdown (drivers only)	90	95	105	90	95	105	°C	Baseplate (Cool and recycle power to restart

MECHANICAL SPECIFICATIONS

	MegaMod (E-Grade)			MegaMod (C-, I-, M-Grade)				
Parameter	**Min**	**Typ**	**Max**	**Min**	**Typ**	**Max**	**Units**	**Test Conditions**
Weight								
1 Up		9.0 (255)			9.0 (255)		Ounces (Grams)	
2 Up		1.2 (545)			1.2 (545)		Lbs. (Grams)	
3 Up		1.7 (772)			1.7 (772)		Lbs. (Grams)	

MegaMod Jr. Specifications

(typical at T_{BP} = 25°C, nominal line, 75% load, unless otherwise specified)

INPUT SPECIFICATIONS

	MegaMod Jr. (E-Grade)			MegaMod Jr. (C-, I-, M-Grade)				
Parameter	**Min**	**Typ**	**Max**	**Min**	**Typ**	**Max**	**Unit**	**Test Conditions**
Inrush charge		$60x10^{-6}$	$100x10^{-6}$		$60x10^{-6}$	$100x10^{-6}$	Coulombs	Nom. line, per module
Input reflected ripple current — pp		10%			10%		I_{IN}	Nom. line, full load
Input ripple rejection		$25+20\text{Log}\left(\frac{V_{IN}}{V_{OUT}}\right)$			$30+20\text{Log}\left(\frac{V_{IN}}{V_{OUT}}\right)$		dB	120Hz, nom. line
					$20+20\text{Log}\left(\frac{V_{IN}}{V_{OUT}}\right)$		dB	2400Hz, nom. line
No load power dissipation		1.35	2		1.35	2	Watts	Per module

OUTPUT SPECIFICATIONS

	MegaMod Jr. (E-Grade)			MegaMod Jr. (C-, I-, M-Grade)				
Parameter	**Min**	**Typ**	**Max**	**Min**	**Typ**	**Max**	**Units**	**Test Conditions**
Setpoint accuracy		1.0%	2.0%		0.5%	1%	V_{NOM}	
Load/line regulation			0.5%		0.05%	0.2%	V_{NOM}	LL to HL, 10% to FL
			1.0%		0.2%	0.5%	V_{NOM}	LL to HL, NL to 10%
Output temperature drift		0.02			0.01		%/°C	Over rated temp.
Long term drift		0.02			0.02		%/1K hours	
Output ripple, pp								
2V, 3.3V		200			100	150	mV	20MHz bandwidth
5V		5%			2%	3%	V_{NOM}	20MHz bandwidth
10V – 95V		3%			0.75%	1.5%	V_{NOM}	20MHz bandwidth
Output voltage trimming[a]	50%		110%	50%		110%	V_{NOM}	
Total remote sense compensation	0.5			0.5			Volts	0.25V max. neg. leg
OVP setpoint		N/A			N/A			
Current limit	105%		135%	105%		125%	I_{NOM}	Automatic restart
Short circuit current	105%		140%	105%		130%	I_{NOM}	

[a] 10V to 15V outputs, standard trim range ±10%. Consult factory for wider trim range. 95 Vout cannot be trimmed up.

CONTROL PIN SPECIFICATIONS

	MegaMod Jr. (E-Grade)			MegaMod Jr. (C-, I-, M-Grade)				
Parameter	**Min**	**Typ**	**Max**	**Min**	**Typ**	**Max**	**Units**	**Test Conditions**
Gate out impedance		50			50		Ohms	
Gate in impedance		1,000			1,000		Ohms	
Gate in high threshold		6			6		Volts	Use open collector
Gate in low threshold	0.65			0.65			Volts	
Gate in low current			6			6	mA	

MegaMod Jr. Specifications (Cont.)

DIELECTRIC WITHSTAND CHARACTERISTICS

	MegaMod Jr. (E-Grade)			MegaMod Jr. (C-, I-, M-Grade)				
Parameter	**Min**	**Typ**	**Max**	**Min**	**Typ**	**Max**	**Unit**	**Test Conditions**
Input to output	3,000			3,000			V_{RMS}	Baseplate earthed
Output to baseplate	500			500			V_{RMS}	
Input to baseplate	1,500			1,500			V_{RMS}	

THERMAL CHARACTERISTICS

	MegaMod Jr. (E-Grade)			MegaMod Jr. (C-, I-, M-Grade)				
Parameter	**Min**	**Typ**	**Max**	**Min**	**Typ**	**Max**	**Units**	**Test Conditions**
Efficiency		78 – 88%			80 – 90%			
Baseplate to chassis		0.2			0.2		°C/Watt	

MECHANICAL SPECIFICATIONS

	MegaMod Jr. (E-Grade)			MegaMod Jr. (C-, I-, M-Grade)				
Parameter	**Min**	**Typ**	**Max**	**Min**	**Typ**	**Max**	**Units**	**Test Conditions**
Weight								
1 Up		4.5 (127)			4.5 (127)		Ounces (Grams)	
2 Up		8.8 (250)			8.8 (250)		Ounces (Grams)	
3 Up		13.3 (377)			13.3 (377)		Ounces (Grams)	

MegaMod Mechanical Specifications

Inputs	
1 –Input	5 Gate Out #2
2 Gate Out #1	6 Gate In #2
3 Gate In #1	7 Gate Out #3
4 +Input	8 Gate In #3

Outputs		
Output #1	Output #2	Output #3
A –Output	F –Output	L –Output
B –Sense*	G –Sense	M –Sense
C Trim*	H Trim	N Trim
D +Sense*	J +Sense	P +Sense
E +Output	K +Output	Q +Output

*For Units with BatMod
B-I_{MON}
C-I_{TRIM}
D-V_{TRIM}

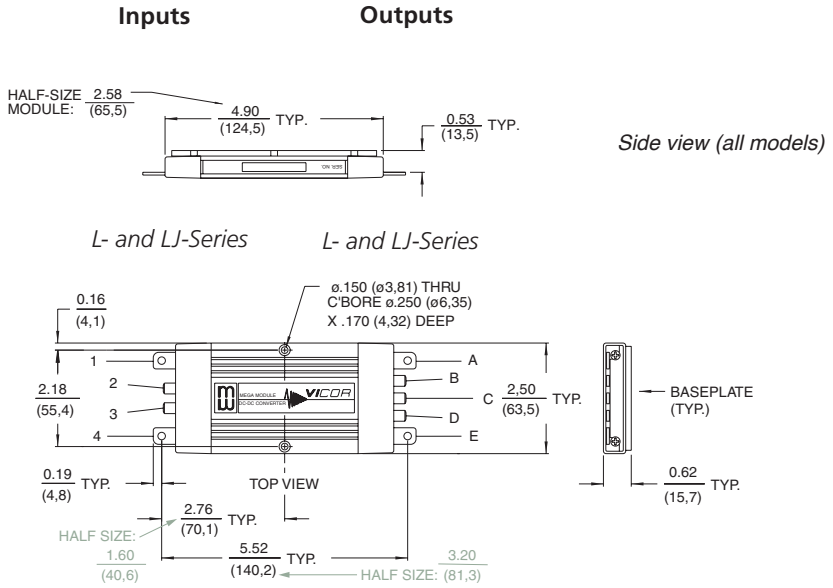

Mounting Information

Use #6 machine hardware torqued to 5-7 in-lbs.

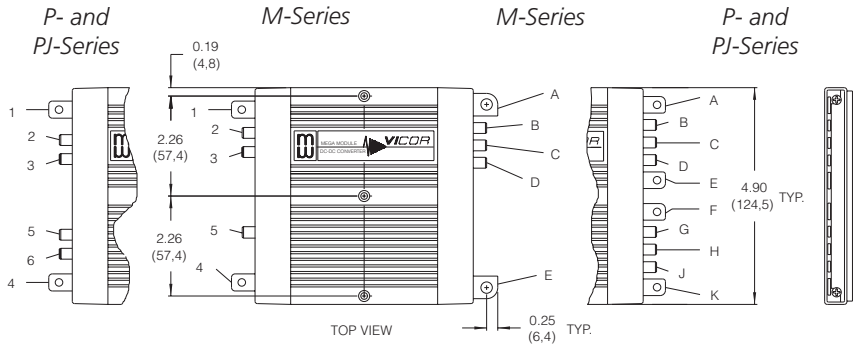

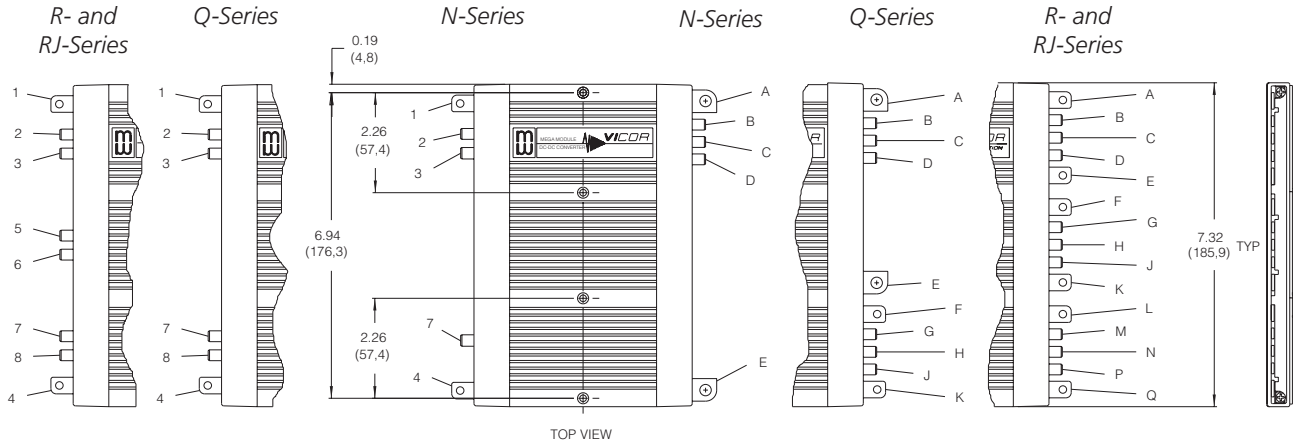

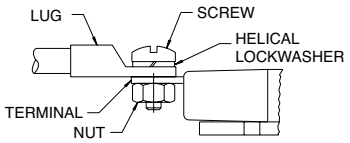

Terminal and Product Model	Terminal Style	Screw Size	Recommended Torque
–Input, +Input			
All models	PCB	8-32 UNC	10 in-lb (1.1 N-m)
–Output, +Output			
L-, P-, R-, LJ-, PJ- & RJ-Series	PCB	8-32 UNC	10 in-lb (1.1 N-m)
M- & N-Series	Metal	1/4-20 UNC	65 in-lb (7.2 N-m)
Q-Series	PCB	8-32 UNC	10 in-lb (1.1 N-m)
	Metal	1/4-20 UNC	65 in-lb (7.2 N-m)
Supervisory All models	Sized to accept AMP Faston® insulated receptacle #2-520184-2		

Vicor's comprehensive line of power solutions includes high density AC-DC and DC-DC modules and accessory components, fully configurable AC-DC and DC-DC power supplies, and complete custom power systems.

Information furnished by Vicor is believed to be accurate and reliable. However, no responsibility is assumed by Vicor for its use. Vicor makes no representations or warranties with respect to the accuracy or completeness of the contents of this publication. Vicor reserves the right to make changes to any products, specifications, and product descriptions at any time without notice. Information published by Vicor has been checked and is believed to be accurate at the time it was printed; however, Vicor assumes no responsibility for inaccuracies. Testing and other quality controls are used to the extent Vicor deems necessary to support Vicor's product warranty. Except where mandated by government requirements, testing of all parameters of each product is not necessarily performed.
Specifications are subject to change without notice.

Vicor's Standard Terms and Conditions

All sales are subject to Vicor's Standard Terms and Conditions of Sale, which are available on Vicor's webpage or upon request.

Product Warranty

In Vicor's standard terms and conditions of sale, Vicor warrants that its products are free from non-conformity to its Standard Specifications (the "Express Limited Warranty"). This warranty is extended only to the original Buyer for the period expiring two (2) years after the date of shipment and is not transferable.
UNLESS OTHERWISE EXPRESSLY STATED IN A WRITTEN SALES AGREEMENT SIGNED BY A DULY AUTHORIZED VICOR SIGNATORY, VICOR DISCLAIMS ALL REPRESENTATIONS, LIABILITIES, AND WARRANTIES OF ANY KIND (WHETHER ARISING BY IMPLICATION OR BY OPERATION OF LAW) WITH RESPECT TO THE PRODUCTS, INCLUDING, WITHOUT LIMITATION, ANY WARRANTIES OR REPRESENTATIONS AS TO MERCHANTABILITY, FITNESS FOR PARTICULAR PURPOSE, INFRINGEMENT OF ANY PATENT, COPYRIGHT, OR OTHER INTELLECTUAL PROPERTY RIGHT, OR ANY OTHER MATTER.

This warranty does not extend to products subjected to misuse, accident, or improper application, maintenance, or storage. Vicor shall not be liable for collateral or consequential damage. Vicor disclaims any and all liability arising out of the application or use of any product or circuit and assumes no liability for applications assistance or buyer product design. Buyers are responsible for their products and applications using Vicor products and components. Prior to using or distributing any products that include Vicor components, buyers should provide adequate design, testing and operating safeguards.

Vicor will repair or replace defective products in accordance with its own best judgment. For service under this warranty, the buyer must contact Vicor to obtain a Return Material Authorization (RMA) number and shipping instructions. Products returned without prior authorization will be returned to the buyer. The buyer will pay all charges incurred in returning the product to the factory. Vicor will pay all reshipment charges if the product was defective within the terms of this warranty.

Life Support Policy

VICOR'S PRODUCTS ARE NOT AUTHORIZED FOR USE AS CRITICAL COMPONENTS IN LIFE SUPPORT DEVICES OR SYSTEMS WITHOUT THE EXPRESS PRIOR WRITTEN APPROVAL OF THE CHIEF EXECUTIVE OFFICER AND GENERAL COUNSEL OF VICOR CORPORATION. As used herein, life support devices or systems are devices which (a) are intended for surgical implant into the body, or (b) support or sustain life and whose failure to perform when properly used in accordance with instructions for use provided in the labeling can be reasonably expected to result in a significant injury to the user. A critical component is any component in a life support device or system whose failure to perform can be reasonably expected to cause the failure of the life support device or system or to affect its safety or effectiveness. Per Vicor Terms and Conditions of Sale, the user of Vicor products and components in life support applications assumes all risks of such use and indemnifies Vicor against all liability and damages.

Intellectual Property Notice

Vicor and its subsidiaries own Intellectual Property (including issued U.S. and pending patent applications) relating to the products described in this data sheet. No license, whether express, implied, or arising by estoppel or otherwise, to any intellectual property rights is granted by this document. Interested parties should contact Vicor's Intellectual Property Department.

Vicor Corporation
25 Frontage Road
Andover, MA, USA 01810
Tel: 800-735-6200
Fax: 978-475-6715

email
Customer Service: custserv@vicorpower.com
Technical Support: apps@vicorpower.com

Mouser Electronics

Authorized Distributor

Click to View Pricing, Inventory, Delivery & Lifecycle Information:

Vicor:

VI-PJ30M-EZZ VI-PJ30M-IYX VI-PJ30Y-CYY VI-PJ30Y-EZZ VI-PJ310-EWZ VI-PJ310-EYZ VI-PJ310-EZY VI-PJ310-EZZ VI-PJ311-CWW VI-PJ311-CXX VI-PJ311-CXY VI-PJ311-CYY VI-PJ311-CZX VI-PJ311-CZZ VI-PJ311-EWY VI-PJ311-EXX VI-PJ311-EYZ VI-PJ311-EZZ VI-RJ0011-IYZZ VI-RJ0011-IZYY VI-RJ0011-IZZZ VI-RJ0011-MZZZ VI-RJ0012-CZZZ VI-RJ0012-EYYY VI-R5013-CYYW VI-R5014-CYYU VI-R5022-CVVW VI-R5022-CVVX VI-R5022-CVYY VI-R5022-CWWW VI-R5022-CYYY VI-R5022-EWXX VI-R5022-EYYY VI-R5022-IWXX VI-R5022-IWXY VI-R5022-IWYY VI-R5022-IYYY VI-RJ0000-EYZZ VI-RJ0000-EZZZ VI-RJ0000-IYYZ VI-RJ0001-CYYZ VI-RJ0001-CYZZ VI-RJ0001-CZZY VI-RJ0001-CZZZ VI-RJ0001-EYYY VI-RJ0001-EYZZ VI-RJ0001-EZZZ VI-RJ0001-IYYZ VI-RJ0001-IYZZ VI-RJ0002-CYYY VI-PJ111-CYZ VI-PJ111-CZZ VI-PJ111-EWW VI-PJ111-EXX VI-PJ111-EYY VI-PJ111-EYZ VI-PJ111-EZZ VI-PJ111-IYY VI-PJ111-IZZ VI-PJ111-MZZ VI-PJ112-EXX VI-PJ113-CYY VI-PJ113-CZY VI-PJ113-CZZ VI-PJ113-EYY VI-PJ113-EZZ VI-PJ113-IYY VI-PJ114-CYY VI-PJ114-CZZ VI-PJ11L-CZW VI-PJ11Y-CZY VI-PJ120-CWX VI-PJ120-CWZ VI-PJ120-CXZ VI-PJ120-CYY VI-PJ120-EWZ VI-R6333-CUUU VI-R633M-CVVW VI-R63R2-EVWV VI-R63R2-EVWW VI-R6440-EUUY VI-R6444-CUUU VI-R6444-CVVV VI-R6444-EUUU VI-R6444-EVVV VI-R644L-CWWW VI-RJ0022-EZYZ VI-RJ0022-EZZZ VI-RJ0022-IZZZ VI-RJ0023-EYYY VI-RJ0023-EZYY VI-RJ0023-EZZX VI-RJ0023-EZZY VI-RJ0023-EZZZ VI-RJ002L-EYYY VI-RJ002L-IYYY VI-RJ0031-CZZZ VI-RJ0033-CZYY VI-RJ00M2-CZZZ VI-RJ00MN-EZZY

Общество с ограниченной ответственностью «МосЧип» ИНН 7719860671 / КПП 771901001
Адрес: 105318, г.Москва, ул.Щербаковская д.3, офис 1107

Данный компонент на территории Российской Федерации

Вы можете приобрести в компании MosChip.

Для оперативного оформления запроса Вам необходимо перейти по данной ссылке:

http://moschip.ru/get-element

Вы можете разместить у нас заказ для любого Вашего проекта, будь то серийное производство или разработка единичного прибора.

В нашем ассортименте представлены ведущие мировые производители активных и пассивных электронных компонентов.

Нашей специализацией является поставка электронной компонентной базы двойного назначения, продукции таких производителей как XILINX, Intel (ex.ALTERA), Vicor, Microchip, Texas Instruments, Analog Devices, Mini-Circuits, Amphenol, Glenair.

Сотрудничество с глобальными дистрибьюторами электронных компонентов, предоставляет возможность заказывать и получать с международных складов практически любой перечень компонентов в оптимальные для Вас сроки.

На всех этапах разработки и производства наши партнеры могут получить квалифицированную поддержку опытных инженеров.

Система менеджмента качества компании отвечает требованиям в соответствии с ГОСТ Р ИСО 9001, ГОСТ РВ 0015-002 и ЭС РД 009

Офис по работе с юридическими лицами:

105318, г.Москва, ул.Щербаковская д.3, офис 1107, 1118, ДЦ «Щербаковский»

Телефон: +7 495 668-12-70 (многоканальный)

Факс: +7 495 668-12-70 (доб.304)

E-mail: info@moschip.ru

Skype отдела продаж:
moschip.ru
moschip.ru_4
moschip.ru_6
moschip.ru_9