Lock All Fields

THIS DRAWING IS UNPUBLISHED. RELEASED FOR PUBLICATION
© COPYRIGHT ALL RIGHTS RESERVED.

LOC	DIST

REVISIONS

P	LTR	DESCRIPTION	DATE	DWN	APVD
	D1	ECR-13-017201	6NOV13	RS	LZ

REPLACED BY OCEAN STYLE APPLICATOR PART NUMBER 2150076-2

FOR REPLACEMENT PARTS FOR APPLICATOR 1239043
REFER TO ADDITIONAL PAGE(S). SPARE PARTS KIT (IF LISTED)
WILL REMAIN AVAILABLE.

THE REPLACEMENT OCEAN STYLE APPLICATOR HAS THE
SAME TERMINATOR/PRESS INTERFACE AS APPLICATOR
1239043

THIS DRAWING IS A CONTROLLED DOCUMENT.

DIMENSIONS:

TOLERANCES UNLESS OTHERWISE SPECIFIED:
0 PLC ±
1 PLC ±
2 PLC ±
3 PLC ±
4 PLC ±
ANGLES ±

MATERIAL

FINISH

DWN R.SHEN
CHK LJ.ZHANG
APVD U.GUO
PRODUCT SPEC
APPLICATION SPEC
WEIGHT

TE Connectivity

NAME END FEED HDI APPLICATOR

SIZE	CAGE CODE	DRAWING NO	RESTRICTED TO
A3		C- 1239043	

CUSTOMER ACCESSIBLE PRODUCTION DRAWING | SCALE | SHEET 1 OF 2 | REV D1

1470-19 (3/11)

Pro/ENGINEER DRAWING

DRAWING MADE IN THIRD ANGLE PROJECTION

1239043 ⇔ 1239043

PART NUMBER	REV	FIRST USED	TERMINATOR	FEED TYPE	DESCRIPTION
1239043-1	D	–	BENCH & LEADMAKER	MECH POST FEED	HD-I APPLICATOR
7-1239043-1	D	–	BENCH & LEADMAKER	MECH POST FEED	-1 AND SPARE PARTS
7-1239043-7	A	–	–	–	SPARE PARTS KIT

CRIMP DATA (AMP TERMINAL)

TERMINAL NAME: TAB WITH LANCE M.I.C.

CRIMP	SIZE	TYPE	RANGE
WIRE	1.78 [.070 IN]	F	0.35-1mm²
INSUL	2.8 [.110 IN]	F	1.2-2.1 [.047-.083 IN]

WIRE STRIP LENGTH 5.00-6.00 (.197-.236 IN)

APPL INSTRUCTION 408-8323

TERMINAL 114-15034 A –
APPL SPEC 114-15004 B –

FEED 28.4 [1.120 IN]

TERMINALS APPLIED

142754 A	–	–	–	–
142184 B	–	–	–	–
142649 A	–	–	–	–
–	–	–	–	–
–	–	–	–	–
–	–	–	–	–
–	–	–	–	–
–	–	–	–	–

WIRE SIZE mm² AWG	CRIMP HEIGHT	PIN PN & LENGTH [IN]
1.0mm²	1.48 ±0.05 [.058 ±.002 IN]	354779-6 [.3020]
0.75mm²	1.41 ±0.05 [.056 ±.002 IN]	1-354779-2 [.3050]
0.6mm²	1.32 ±0.05 [.052 ±.002 IN]	2-354779-0 [.3090]
0.5mm²	1.27 ±0.05 [.050 ±.002 IN]	2-354779-4 [.3110]
0.35mm²	1.21 ±0.05 [.048 ±.002 IN]	2-354779-8 [.3130]
–	–	–
–	–	–
–	–	–
–	–	–
–	–	–
–	–	–
–	–	–
–	–	–
–	–	–
–	–	–

1. RECOMMENDED SPARE PARTS.
2. GREASE RAM, CAM, CAM FOLLOWER AND FEED ROD LIGHTLY.
3. CERTAIN TERMINALS REQUIRE LUBRICATION. REFER TO THE APPLICATOR INSTRUCTION SHEET FOR MORE INFORMATION.
4. LUBRICATE DAILY PER THE APPLICATOR INSTRUCTION SHEET SUPPLIED WITH THE APPLICATOR.
5. CUT TO LENGTH AT ASSEMBLY.

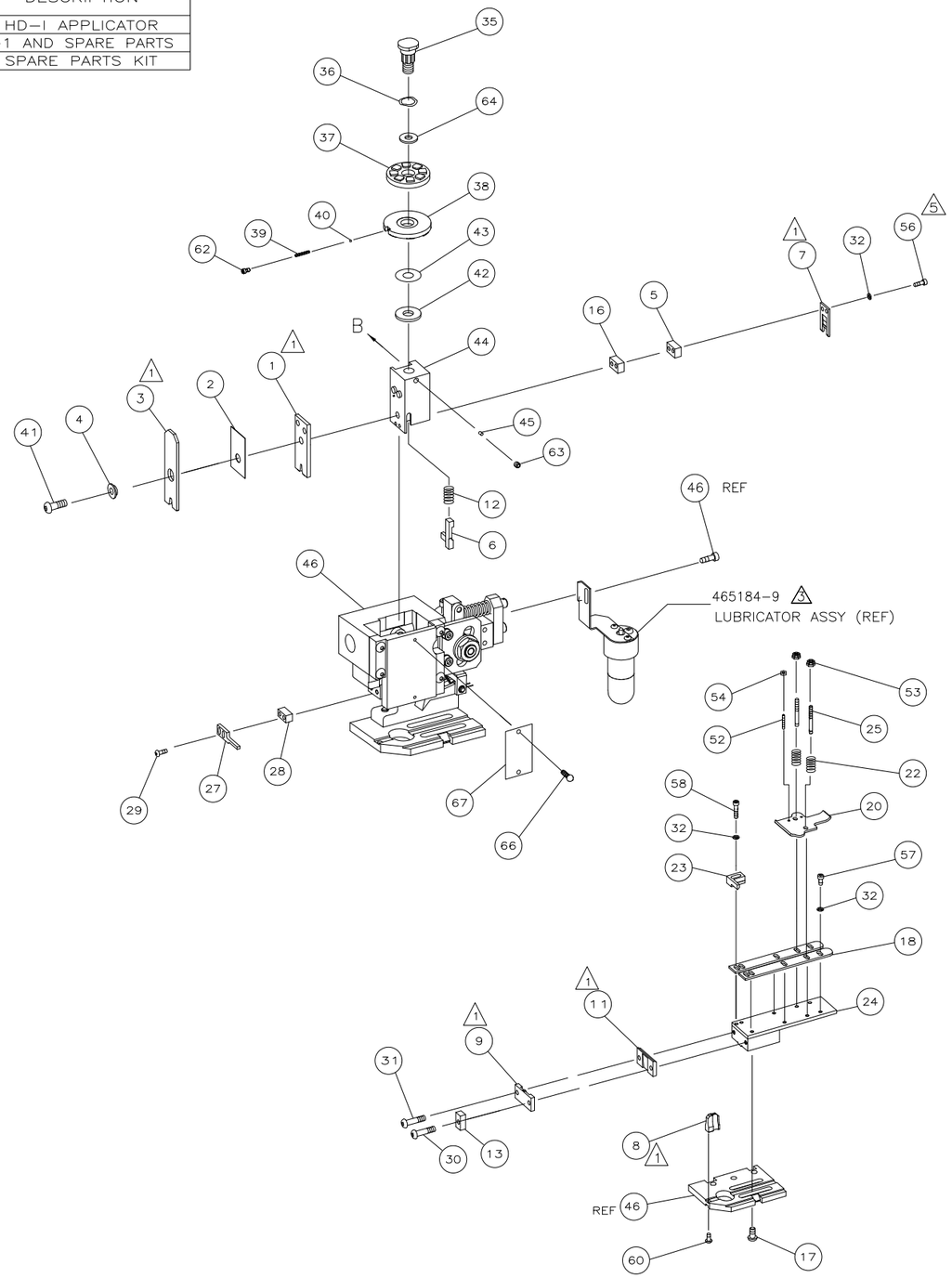

					73
–	1	1	1239043	PRINT, APPLICATOR LOG SHEET	72
–	1	1	1338705-2	DOCUMENTATION PACKAGE	71
					70
					69
					68
–	1	1	461264-1	PLATE, IDENTIFICATION	67
–	2	2	21017-2	SCR,DRIVE(#2X.19)ID PLATE	66
					65
–	1	1	986950-1	WASHER, FLAT PRECISION	64
–	1	1	3-18031-0	SCR,SKT SET(M6X6)RAM	63
–	1	1	18023-9	SCR,SKT CAP(M4X6)CP DSC	62
					61
–	1	1	18024-7	SCR,BHC(M4X10)ANVIL	60
					59
–	2	2	1-18023-3	SCR,BHC(M4X16)HOLD DOWN	58
–	5	5	18023-9	SCR,SHC(M4X6)STRIP GUIDE	57
5 –	2	2	1-18023-5	SCR,SHC(M4X25)SLUG BLADE	56
					55
–	2	2	18029-1	NUT,HEX(M3)DRAG	54
–	2	2	986965-1	NUT,HEX SL(M4)DRAG STUD	53
–	2	2	2-18032-2	SCR,SKT SET(M3X10)DRAG	52
					51
					50
–	1	1	18024-3	SCR,BHC(M3X10)CAM	49
					48
–	1	1	1338676-1	CAM, POST-FEED 30 & 40 mm ST	47
–	1	1	1338662-1	APPLICATOR, BASIC (SUBASSY)	46
–	1	1	690191-1	PLUG, NYLON	45
–	1	1	1320998-1	RAM	44
–	1	1	690125-1	WASHER, LAMINATED	43
–	1	1	690124-1	WASHER, RAM	42
–	1	1	2-18024-6	SCREW,BHC(M8X25)CRIMPER	41
–	1	1	23241-1	BALL, STEEL	40
–	1	1	2-22278-7	SPRING, COMPRESSION	39
–	1	1	1320922-1	DISC, INSULATION	38
–	1	1	354777-1	WIRE DISC, PLASTIC	37
–	1	1	22480-5	WASHER, SPRING	36
–	1	1	690212-1	POST, RAM	35
					34
					33
–	9	9	18025-2	WASHER,LOCK(M4)SHEAR BL	32
–	1	1	1-18024-0	SCR,BHC(M4X20)SHEAR PL	31
–	1	1	4-18024-7	SCR,BHC(M4X25)SHEAR PL	30
–	2	2	18024-8	SCR,BHC(M4X12)STRIPPER	29
–	1	1	1-690451-5	SPACER, STRIPPER	28
–	1	1	240639-4	STRIPPER	27
					26
–	2	2	1320906-1	DRAG, STUD	25
–	1	1	1320995-8	STRIP GUIDE	24
–	1	1	240825-1	PLATE, STRIP HOLD DOWN	23
–	2	2	4-22281-1	SPRING, DRAG	22
					21
–	1	1	1338665-1	DRAG, STOCK	20
					19
–	2	2	1338663-4	GUIDE, LOWER STRIP	18
–	4	4	1-18024-8	SCR,BHC(M6X12)STRIP GD PL	17
–	1	1	1338708-1	SPACER, SLUG BLADE	16
					15
					14
–	1	1	1-690481-0	SPACER, HOLD DOWN	13
–	1	1	23846-1	SPRING, HOLD DOWN	12
1 –	1	1	240833-7	PLATE, REAR SHEAR	11
					10
1 –	1	1	690482-5	PLATE, FRONT SHEAR	9
1 1	2	1	1338686-1	ANVIL	8
1 –	1	1	690474-5	BLADE, SLUG	7
–	1	1	6-455892-9	HOLD DOWN, TERMINAL	6
–	1	1	2-240641-6	SPACER, SLUG BLADE	5
–	1	1	2-238009-3	SPACER, BLOCK CRIMPER	4
1 1	2	1	8-456134-7	CRIMPER, INSULATION	3
–	1	1	455888-5	SPACER, CRIMPER	2
1 1	2	1	3-456404-9	CRIMPER, WIRE	1
	-77	-71	-1	PART NO	DESCRIPTION	ITEM NO

← REVISION OF EACH ASSY NO (WHEN BLANK, USE DWG REVISION)

QTY REQD PER ASSY — PARTS LIST

VIEW B ROTATED 180°

POST-FEED 40 mm STROKE

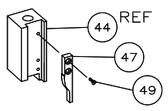

LEADMAKER OR BENCH G

POST-FEED 30 mm STROKE

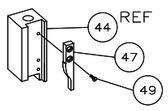

K TERMINATOR BENCH MACHINE

LOC A
DIST 66

P	F	LTR	REVISION RECORD	APP	DATE
		D	SEE ECR-07-023250	LL	OCT07
		C	0150-1031-02	BH	DEC02
		B	0150-0292-02	GB	MAR02
		A	SEE ECN 015A-0452-00	LL	OCT00

DIMENSIONS: mm [INCHES]
DO NOT SCALE PRINT.
TOLERANCES UNLESS OTHERWISE SPECIFIED:
2 PLC DEC ±-
3 PLC DEC ±-
4 PLC DEC ±-
ANGLES ± -
SURF TEXTURE: √
REMOVE BURRS, BREAK SHARP EDGES R0.38 MAX

MATL – – | HT TR – – | FIN – –

DR T.KINT 31MAY00 | APP 31MAY00 T.ELBIN | CHK – – | REL 05OCT00 L.LOFTHOUSE

AMP Incorporated Harrisburg, PA 17105-3608

NAME END FEED HD-I APPLICATOR | MACHINE REF HD-I APPL

SCALE – | D | DWG NO 1239043 | SHEET 1 OF 1 | REV D

CAGE CODE 00779 — CUSTOMER AND ASSEMBLY DRAWING — RESTRICTED TO –

AMP 1756 REV 3-92 Translated 07/0409,222949 (YYMMDD.HHMMSS) from Computervision, Inc., Medusa Revision 12.2.5T

THIS DRAWING IS A CONTROLLED DOCUMENT.
LAYOUT L2393
SET UP GAGE 458638-3
THIS DRAWING IS UNPUBLISHED. © COPYRIGHT 2000 BY AMP INCORPORATED. ALL RIGHTS RESERVED. RELEASED FOR PUBLICATION 2000

Общество с ограниченной ответственностью «МосЧип» ИНН 7719860671 / КПП 771901001
Адрес: 105318, г.Москва, ул.Щербаковская д.3, офис 1107

Данный компонент на территории Российской Федерации

Вы можете приобрести в компании MosChip.

Для оперативного оформления запроса Вам необходимо перейти по данной ссылке:

http://moschip.ru/get-element

Вы можете разместить у нас заказ для любого Вашего проекта, будь то серийное производство или разработка единичного прибора.

В нашем ассортименте представлены ведущие мировые производители активных и пассивных электронных компонентов.

Нашей специализацией является поставка электронной компонентной базы двойного назначения, продукции таких производителей как XILINX, Intel (ex.ALTERA), Vicor, Microchip, Texas Instruments, Analog Devices, Mini-Circuits, Amphenol, Glenair.

Сотрудничество с глобальными дистрибьюторами электронных компонентов, предоставляет возможность заказывать и получать с международных складов практически любой перечень компонентов в оптимальные для Вас сроки.

На всех этапах разработки и производства наши партнеры могут получить квалифицированную поддержку опытных инженеров.

Система менеджмента качества компании отвечает требованиям в соответствии с ГОСТ Р ИСО 9001, ГОСТ РВ 0015-002 и ЭС РД 009

Офис по работе с юридическими лицами:

105318, г.Москва, ул.Щербаковская д.3, офис 1107, 1118, ДЦ «Щербаковский»

Телефон: +7 495 668-12-70 (многоканальный)

Факс: +7 495 668-12-70 (доб.304)

E-mail: info@moschip.ru

Skype отдела продаж:
moschip.ru
moschip.ru_4
moschip.ru_6
moschip.ru_9