“ZNR” Transient/Surge Absorbers
Type: D
Series: E-S1

“ZNR” Transient/Surge Absorber, Series E-S1, improves E series products with high capability for absorbing transient overvoltage in a compact size, suitable for surge protection at high temperature.

Features

- Large withstanding surge current capability in compact sizes
- Withstanding surge current at max. 125 °C
- Large “Energy Handling Capability” absorbing transient overvoltages in compact sizes
- Wide range of varistor voltages
- RoHS compliant

Recommended Applications

- Transistor, diode, IC, thyristor or triac semiconductor protection
- Surge protection in consumer electronic equipment
- Surge protection in communication, measuring or controller electronics
- Surge protection in electronic home appliances, gas or petroleum appliances

Applicable Standards

- UL1449 (VZCA2/UL, VZCA8/C-UL)
- VDE IEC61051-1, -2, -2-2, IEC60950-1 Annex.Q, IEC62368-1 G8.2
- CQC (GB/T10193, GB/T10194, GB4943.1, GB8898)

Refer to "Standard Products" , and "Application Note for Safety Standards" , for the details.

■ As for Handling Precautions and Minimum Quantity / Packing Unit

Please see Related Information

Explanation of Part Numbers

1	2	3	4	5	6	7	8	9	10	11	12
E	R	Z	E			A				S	1

Product Code

Series	
E14	Series E14-S1

Lead Configuration		
Symbol	Configuration	Packaging
A	Straight Lead	Bulk

Norminal Varistor Voltage
The first two digits are significant figures and the third one denotes the number of zeros following.

Design No.	
S1	Long lead type
SC	Lead cut type

Reference Guide to Standard Products

Part No.	Applicable Standards		Varistor Voltage at 1 mA	Maximum Allowable Voltage		Clamping Voltage at 8/20 μs		Maximum Peak Current at 8/20 μs (A)			Recommended Applications
	Type Name	Approvals	(V)	ACrms (V)	DC (V)	max. (V)	Ip (A)	85℃ 1 time	125℃ 1 time	125℃ 2 times	
ERZE14A201S1	E14201	○☆★◇◆	200 (185 to 225)	130	170	340	100	10000	7500	6500	AC 100 V Line–Line Applications
ERZE14A221S1	E14221	○☆★◇◆	220 (198 to 242)	140	180	360	100	10000	7500	6500	
ERZE14A241S1	E14241	○☆★◇◆	240 (216 to 264)	150	200	395	100	10000	7500	6500	AC 100 V to 120 V Line–Line Applications
ERZE14A271S1	E14271	○☆★◇◆	270 (247 to 303)	175	225	455	100	10000	7500	6500	
ERZE14A331S1	E14331	○☆★◇◆	330 (297 to 363)	210	270	545	100	10000	7500	6500	AC 100 V to 120 V Line–Line Applications Telephone Line Applications, (For DC 250 V Insulation Resistance Test)
ERZE14A361S1	E14361	○☆★◇◆	360 (324 to 396)	230	300	595	100	10000	7500	6500	
ERZE14A391S1	E14391	○☆★◇◆	390 (351 to 429)	250	320	650	100	10000	7500	6500	
ERZE14A431S1	E14431	○☆★◇◆	430 (387 to 473)	275	350	710	100	10000	7500	6500	AC 100 V to 220 V Line–Line and Line–Ground Applications
ERZE14A471S1	E14471	○☆★◇◆	470 (423 to 517)	300	385	775	100	10000	7500	6500	
ERZE14A511S1	E14511	○☆★◇◆	510 (459 to 561)	320	410	845	100	10000	7500	6500	AC 100 V to 240 V Line–Line and Line–Ground Applications
ERZE14A561S1	E14561	○☆★◇◆	560 (504 to 616)	350	450	930	100	10000	7500	6500	
ERZE14A621S1	E14621	○☆★◇◆	620 (558 to 682)	385	505	1025	100	7500	7500	6500	
ERZE14A681S1	E14681	○☆★◇◆	680 (612 to 748)	420	560	1120	100	7500	7500	6500	
ERZE14A751S1	E14751	○☆★◇◆	750 (675 to 825)	460	615	1240	100	7500	7500	6500	AC 380 V, Line–Line and Line–Ground Applications (For DC 500 V Insulation Resistance Test)
ERZE14A821S1	E14821	○☆★◇◆	820 (738 to 902)	510	670	1355	100	7500	7500	6500	
ERZE14A911S1	E14911	○☆★◇◆	910 (819 to 1001)	550	745	1500	100	7500	7500	6500	AC 415 V, Line–Line and Line–Ground Applications (For DC 500 V Insulation Resistance Test)
ERZE14A102S1	E14102	○☆★◇◆	1000 (900 to 1100)	625	825	1650	100	7500	7500	6500	AC 480 V, Line–Line and Line–Ground Applications (For DC 500 V Insulation Resistance Test)
ERZE14A112S1	E14112	○☆★◇◆	1100 (990 to 1210)	680	895	1815	100	7500	7500	6500	

Maximum Allowable Voltage and Maximum Peak Current at 8/20 μs(A) at 125 °C

○ : UL1449 (VZCA2/UL, VZC A8/C-UL), ☆ : VDE (IEC61051-1, -2, -2-2), ★ : VDE (IEC60950-1 Annex.Q, IEC62368-1 G8.2),

◇ : CQC (GB/T10193, GB/T10194), ◆ : CQC (GB4943.1, GB8898)

※Approval number (File No.) of safety regulations are subject to revision without notice. Ask factory for a copy of the latest file No.

Series E14-S1

Ratings and Characteristics

●Operating Temperature Range : -40 to 125 ℃ ●Storage Temperature Range : -40 to 125 ℃

Part No.	Varistor Voltage	Maximum Allowable Voltage		Clamping Voltage (max.) *Ip	Rated Power	Maximum Energy		Maximum Peak Current at 8/20 μs			Capacitance (max.) at 1 kHz
						10/1000 μs	2 ms	85 ℃ 1 time	125 ℃ 1 time	125 ℃ 2 times	
	V_{1mA}(V)	ACrms (V)	DC (V)	(V)	(W)	(J)	(J)	(A)	(A)	(A)	(pF)
ERZE14A201S1	200(185 to 225)	130	170	340	1.0	140	100	10000	7500	6500	1300
ERZE14A221S1	220(198 to 242)	140	180	360	1.0	155	110	10000	7500	6500	1200
ERZE14A241S1	240(216 to 264)	150	200	395	1.0	168	120	10000	7500	6500	1100
ERZE14A271S1	270(247 to 303)	175	225	455	1.0	190	135	10000	7500	6500	1000
ERZE14A331S1	330(297 to 363)	210	270	545	1.0	228	160	10000	7500	6500	900
ERZE14A361S1	360(324 to 396)	230	300	595	1.0	255	180	10000	7500	6500	900
ERZE14A391S1	390(351 to 429)	250	320	650	1.0	275	195	10000	7500	6500	800
ERZE14A431S1	430(387 to 473)	275	350	710	1.0	303	215	10000	7500	6500	800
ERZE14A471S1	470(423 to 517)	300	385	775	1.0	350	250	10000	7500	6500	750
ERZE14A511S1	510(459 to 561)	320	410	845	1.0	382	273	10000	7500	6500	700
ERZE14A561S1	560(504 to 616)	350	450	930	1.0	382	273	10000	7500	6500	700
ERZE14A621S1	620(558 to 682)	385	505	1025	1.0	382	273	7500	7500	6500	650
ERZE14A681S1	680(612 to 748)	420	560	1120	1.0	382	273	7500	7500	6500	600
ERZE14A751S1	750(675 to 825)	460	615	1240	1.0	420	300	7500	7500	6500	530
ERZE14A821S1	820(738 to 902)	510	670	1355	1.0	460	325	7500	7500	6500	500
ERZE14A911S1	910(819 to 1001)	550	745	1500	1.0	510	360	7500	7500	6500	400
ERZE14A102S1	1000(900 to 1100)	625	825	1650	1.0	565	400	7500	7500	6500	400
ERZE14A112S1	1100(990 to 1210)	680	895	1815	1.0	620	440	7500	7500	6500	350

*Ip Measuring current of clamping voltage : 100 A

Dimensions in mm (not to scale)

Part No.	D max.	T max.	W±1.0	H max.	L±1.0
ERZE14A201S1	16.5	5.2	10.0	20.0	2.1
ERZE14A221S1	16.5	5.3	10.0	20.0	2.2
ERZE14A241S1	16.5	5.4	10.0	20.0	2.3
ERZE14A271S1	16.5	5.6	10.0	20.0	2.5
ERZE14A331S1	16.5	5.9	10.0	20.0	2.8
ERZE14A361S1	16.5	6.1	10.0	20.0	3.0
ERZE14A391S1	16.5	6.2	10.0	20.0	3.1
ERZE14A431S1	16.5	6.4	10.0	20.0	3.3
ERZE14A471S1	16.5	6.6	10.0	20.0	3.5
ERZE14A511S1	16.5	6.8	10.0	20.0	3.7
ERZE14A561S1	16.5	7.2	10.0	20.0	4.0
ERZE14A621S1	17.5	7.5	10.0	20.5	4.4
ERZE14A681S1	17.5	7.8	10.0	20.5	4.7
ERZE14A751S1	17.5	8.2	10.0	20.5	5.1
ERZE14A821S1	17.5	8.5	10.0	20.5	5.4
ERZE14A911S1	17.5	9.0	10.0	20.5	5.9
ERZE14A102S1	17.5	9.5	10.0	20.5	6.4
ERZE14A112S1	17.5	10.1	10.0	20.5	7.2

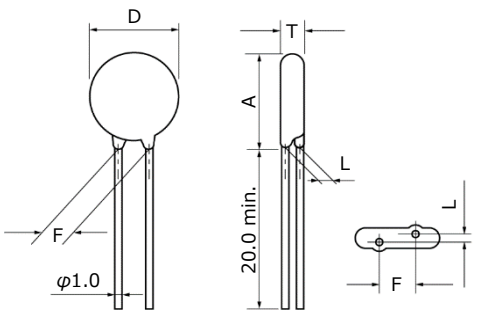

Typical Characteristics

Voltage vs. Current

ERZE14A201S1 to ERZE14A511S1

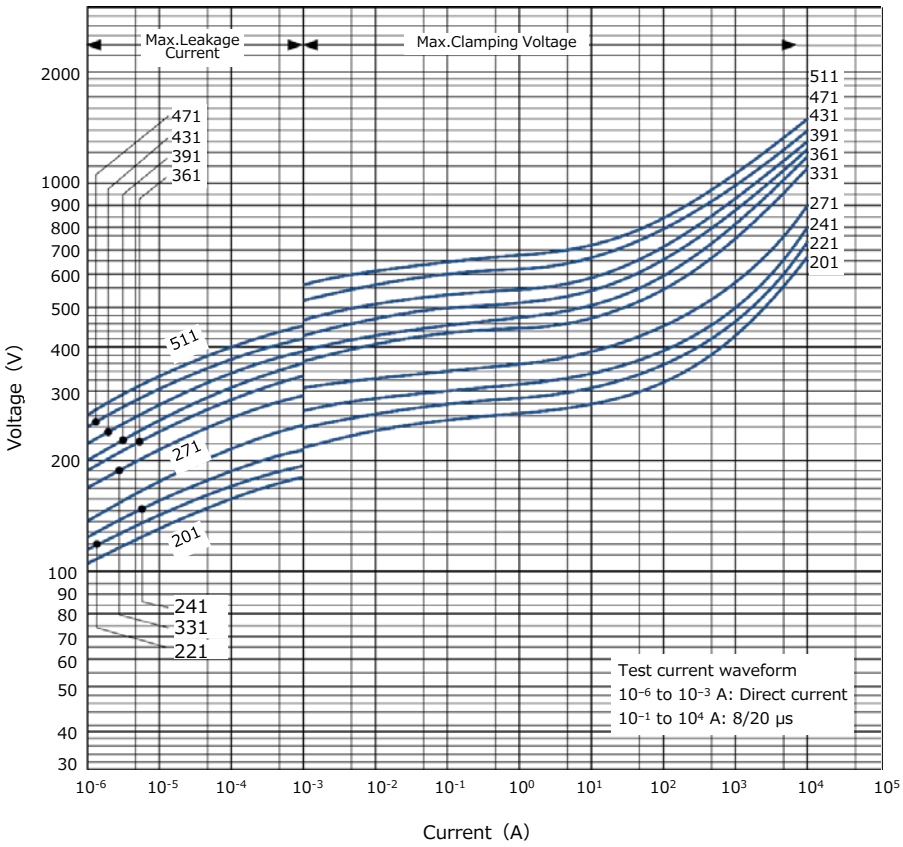

Impulse Derating (Relation between impulse width and impulse current multiple)

ERZE14A201S1 to ERZE14A511S1

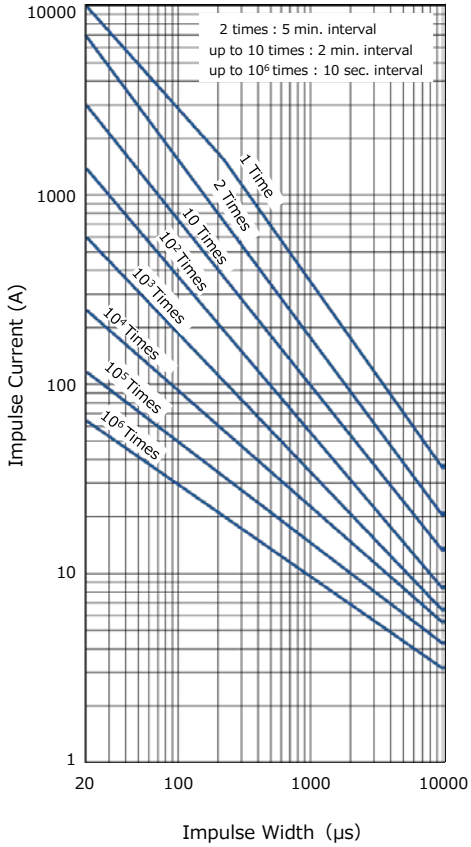

ERZE14A561S1 to ERZE14A112S1

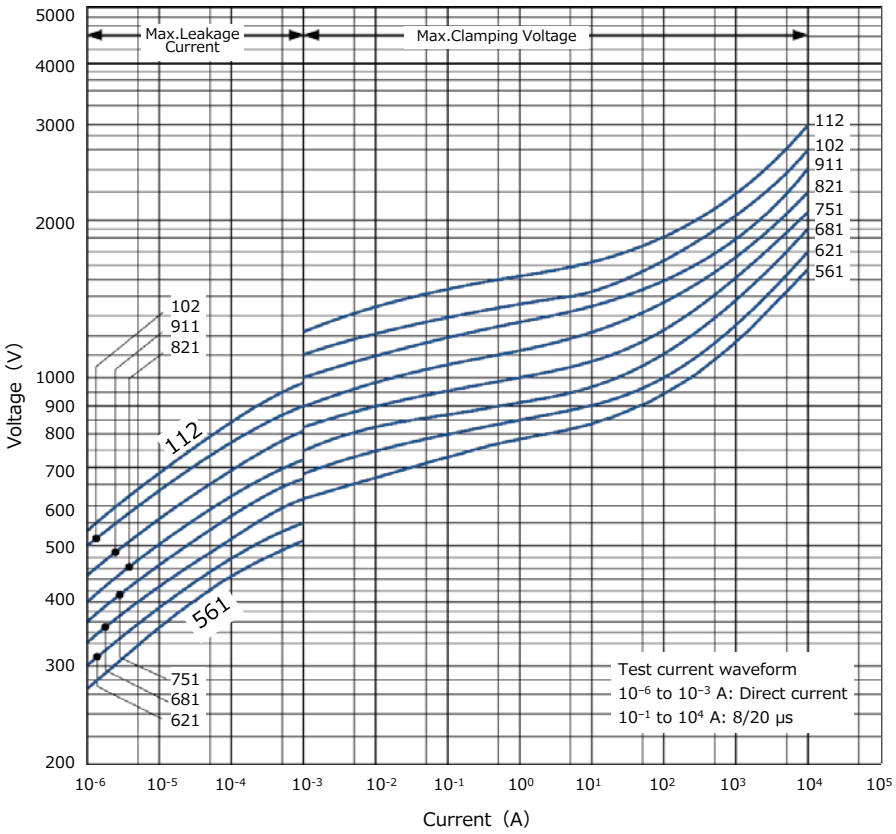

ERZE14A561S1 to ERZE14A112S1

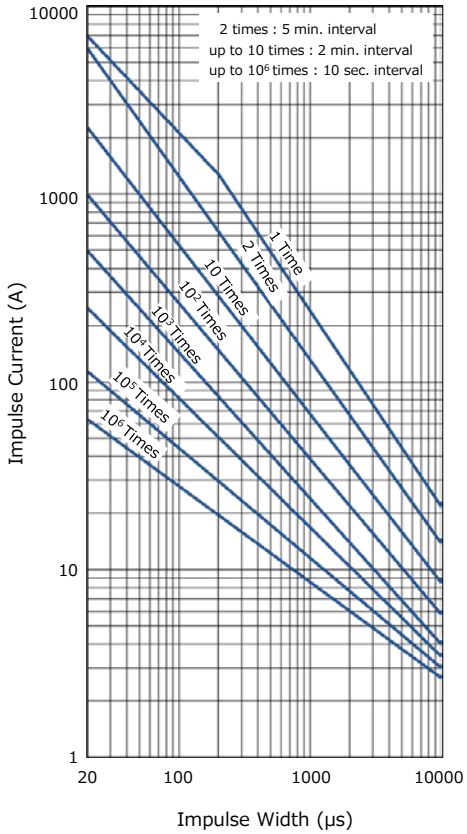

Straight Leads Cut Type (Bulk Type)

Ratings and Characteristics

※Refer to bulk standard type.

Dimensions in mm (not to scale)

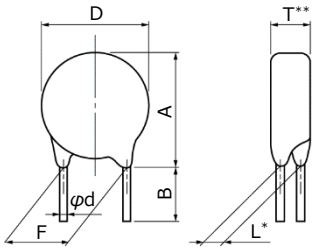

notes ✻ Dimension "L": Conforms to each individtual specification.
✻✻ Dimension "T": Conforms to each individual specification.

Series / Varister Voltage / Symbol	E14-S1	
	201 to 561	621 to 112
D	16.5 max	17.5 max
A	20.0 max	20.5 max
F	10.0±1.0	10.0±1.0
φ d	$1.00^{+1.00}_{-0.05}$	$1.00^{+1.00}_{-0.05}$
B	4.0±1.5	4.0±1.5
Standard Products Part No.	ERZE14A□□□SC	

Application Note for Safety Standards (For Series E-S1)

- Approvals products lists in "Reference Guide to Standard Products."
- UL, VDE and CSA : Registered in "Type name", it isn't registered in "Panasonic Part No."
- CQC : Registered in "Panasonic Part No."
- "Rated Voltages" are specified for UL recognized components in list shown below.

The AC Rated Voltage and Maximum Allowable Voltage

Type Name	Maximum Allowable Voltage		Rated Voltage (Vrms)
	ACrms (V)	DC (V)	UL1449
E✻201	130	170	118
E✻221	140	180	127
E✻241	150	200	136
E✻271	175	225	159
E✻331	210	270	189
E✻361	230	300	209
E✻391	250	320	227
E✻431	275	350	250
E✻471	300	385	272
E✻511	320	410	291
E✻561	350	450	320
E✻621	385	505	350
E✻681	420	560	381
E✻751	460	615	418
E✻821	510	670	463
E✻911	550	745	500
E✻102	625	825	568
E✻112	680	895	600

✻ : 14 series is 14

Guidelines and precautions regarding the technical information and use of our products described in this online catalog.

- If you want to use our products described in this online catalog for applications requiring special qualities or reliability, or for applications where the failure or malfunction of the products may directly jeopardize human life or potentially cause personal injury (e.g. aircraft and aerospace equipment, traffic and transportation equipment, combustion equipment, medical equipment, accident prevention, anti-crime equipment, and/or safety equipment), it is necessary to verify whether the specifications of our products fit to such applications. Please ensure that you will ask and check with our inquiry desk as to whether the specifications of our products fit to such applications use before you use our products.

- The quality and performance of our products as described in this online catalog only apply to our products when used in isolation. Therefore, please ensure you evaluate and verify our products under the specific circumstances in which our products are assembled in your own products and in which our products will actually be used.

- If you use our products in equipment that requires a high degree of reliability, regardless of the application, it is recommended that you set up protection circuits and redundancy circuits in order to ensure safety of your equipment.

- The products and product specifications described in this online catalog are subject to change for improvement without prior notice. Therefore, please be sure to request and confirm the latest product specifications which explain the specifications of our products in detail, before you finalize the design of your applications, purchase, or use our products.

- The technical information in this online catalog provides examples of our products' typical operations and application circuits. We do not guarantee the non-infringement of third party's intellectual property rights and we do not grant any license, right, or interest in our intellectual property.

- If any of our products, product specifications and/or technical information in this online catalog is to be exported or provided to non-residents, the laws and regulations of the exporting country, especially with regard to security and export control, shall be observed.

<Regarding the Certificate of Compliance with the EU RoHS Directive/REACH Regulations>

- The switchover date for compliance with the RoHS Directive/REACH Regulations varies depending on the part number or series of our products.

- When you use the inventory of our products for which it is unclear whether those products are compliant with the RoHS Directive/REACH Regulation, please select "Sales Inquiry" in the website inquiry form and contact us.

We do not take any responsibility for the use of our products outside the scope of the specifications, descriptions, guidelines and precautions described in this online catalog.

"ZNR" Transient/Surge Absorbers, Type D, Series E, E-S1

Handling Precautions

⚠ Safety Precautions

In case that a ZNR Surge Absorber (hereafter referred to as the ZNR, or product name) is used, if an abnormality takes place because of peripheral conditions of the ZNR(material, environments, power source conditions, circuit conditions, etc. in equipment design), fire, electric shock, burn, or product failure may be occur. The precautions for this product are described below, understand the content thoroughly before usage. For more questions, contact us.
If there's any uncertainty/doubt/products safety items, please contact us. When a dogma shall be occurred about safety for this products, be sure to inform us rapidly, operate your technical examination.

1.⚠ Precautions to be strictly observed

1.1 Confirmation of performance ratings

Use the ZNR within its rated range of performance such as the Max. allowable voltage, withstanding surge current, withstanding energy, impulse life(surge life), average pulse power, and operating temperature range. If used outside the range, the ZNR can be degrade and have element fracture, which may result in smoking and ignition.

1.2 To avoid accidents due to unexpected phenomena, take the following measures

1) In the event of fracture of the ZNR, its pieces may scatter ; hence, put the case or cover of the set product in place.
2) Do not install the ZNR near combustible substances(polyvinyl chloride wires, resin moldings, etc.). If it is difficult to do, install a nonflammable cover.
3) Across-the-line use
When the ZNR is used across a line, put a current fuse in series with the ZNR(Refer to Item 2.1.1). (4) .
4) Use between line to ground
(1) If the case that the ZNR is used between a line to the ground, the short-circuit of the ZNR may not blow the current fuse because of grounding resistance, which may cause smoking and ignition of the ZNR's exterior resin.
As the measure against it, install an earth leakage breaker on the power supply side of the ZNR position. If no earth leakage breaker is installed, use a thermal fuse together wth a current fuse in series. (Refer to Table 1.)
(2) If the case that the ZNR is used between a live part to metal case, an electric shock may develop at a shortcircuit of the ZNR ; hence, ground the metal case to the ground or keep it from the human body.

1.3 If ZNR is shorted out and happen smoke or ignition, please cut provided current to ZNR immediately.

2. Application notes

2.1 Pay attention to the following items to avoid the shortened life and failure of the ZNR

1) Circuit conditions
(1) Select a ZNR of which the maximum voltage including fluctuations in source voltage allows for the maximum permissible circuit voltage. (Refer to Table 1.)
(2) In cases that surges are intermittently applied at short intervals(for example, in case that the voltage of the noise simulator test is implemented etc.), do not let them exceed the ZNR's rated power.
(3) Select a ZNR recommended in Table 1.
<1> Across-the-line use
If possible, use a Part No. marked with * in case of voltage temporarily rises load unbalance of separately-wired loads, short between hot and neutral-line, open of neutral line in single-phase-three-wired system, and due to resonance at switching for a capacitive, inductive load.

<2> Used between line to ground

Use a different Part No. from “Across-the-line use” as table 1, because of raising voltage in case of “Line to Ground Fault”.

Use a Part No. marked with **in table 1, in case of the insulation resistance test(500 VDC) for equipment. When using a Part of the varistor voltage that the insulation efficiency examination can not be cleared, there is a case where the surge absorber can be done by removing it from the circuit depending on the circuit condition(Refer examination of Japan Domestic Safety Regulations).

Use a Part No. marked with *** in table 1, in case of the withstanding voltage test (1000 VAC or 1200 VAC) for equipment.

(4) Concerning current fuse

<1> We recommend selecting a ZNR and the rated current of a current fuse as follows.

Finally, please be sure that there is no danger if the ZNR mounted on the equipment breaks.

●Type D, Series E, E-S1

Standard Part No.	ERZE05A□□□	ERZE07A□□□	ERZE08A□□□	ERZE10A□□□	ERZE11A□□□	ERZE14A□□□
Fuse rated current	5 A max.	7 A max.	7 A max.	10 A max.	10 A max.	10 A max.

◆ Fuses shall use rated voltages ap pro pri ate for circuits.

<2> The recommended fuse position is shown in table 1, “Example of ZNR application”, however, if the load current of protected equipment is larger than that of the above recommended fuse rated current, install a current fuse at the position shown below.

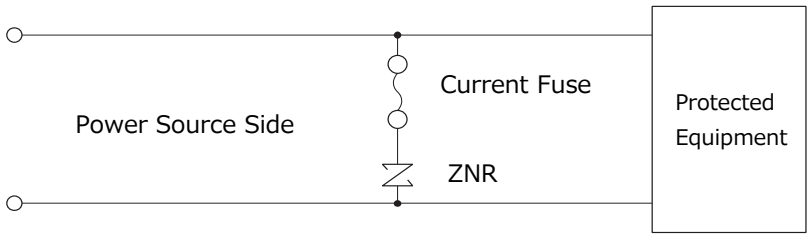

(5) Concerning thermal fuse

Set a thermal fuse to get high thermal

Table 1 Example of ZNR application

Connections example

Across-the-Line use

DC/AC
Single-phase

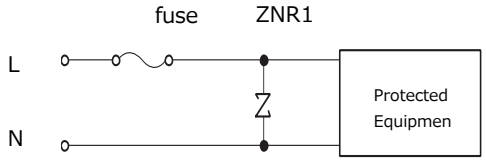

AC 3-phase

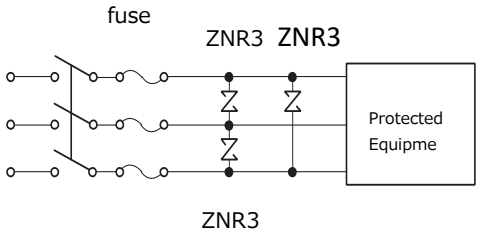

Use between Line to ground

DC/AC
Single-phase

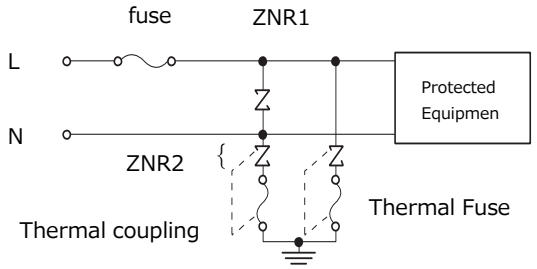

AC 3-phase

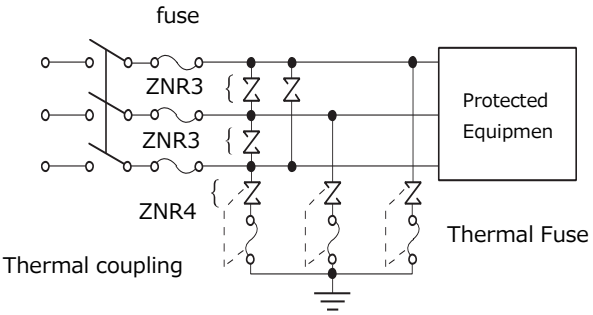

Example of varistor voltage

ZNR	Source Voltage	Nominai varistor voltage
ZNR 1 ZNR 3	AC 100 V	201 to 361*
	AC 120 V	241 to 431*
	AC 200 V	471 to 621*
	AC 220 V	471 to 621*
	AC 380 V	751, 821*

ZNR	Source Voltage	Nominai varistor voltage	
ZNR 2 ZNR 4	AC 100 V AC 220 V	471	471
		511	-
		621*	-
		821 and more**	-
	AC 230 V AC 240 V	511	-
		621*	-
		821 and more**	-
	AC 380 V	112**	-

Note : Element size is selected by impulse Condition.

(6) On use for equipment
The catalog guarantees the quality as individual component.
Before you use the products, please make sure to check and evaluate the products in the circumstance where they are installed in your product.

2) Operating environments
(1) The ZNR is designed to be used indoors. Do not use it exposed outdoors.
(2) Do not use the ZNR in places exposed to temperatures beyond the operating temperature range, such as places exposed to sunlight and vicinities of heating equipment.
(3) Do not use the ZNR in places exposed to high temperatures and high humidity, such as places exposed directly to rain, wind, dew condensation, and vapor.
(4) Do not use the ZNR in dusty and salinity environment and atmospheres polluted by corrosive gases, in liquids such as water, oil, chemical, organic solvent.

3) Processing conditions
(1) Do not wash the ZNR by such solvents(thinner, acetone, etc.) as its exterior resin deteriorates.
(2) Do not apply a strong vibration or shock (by falling, etc.) to the ZNR, cracking to its exterior resin and element may occur.
(3) When coating the ZNR with resin(including molding), do not use such resin.
(4) Do not bend the ZNR type D lead wires at the position close to its ZNR type D exterior resin, or apply external force to the position.
(5) When soldering the ZNR lead wires, follow the recommended conditions and do not melt the solder and insulating materials constituting the ZNR.
(6) When designing lead-wire-terminal land-hole of circuit board, please check actual ZNR by reference specification about center value of lead-wire terminal pitch.

	Soldering Method	Recommended Condition	Attention Item
Type D	Flow soldering	260 °C, within 10 seconds.	Type D is not Refl ow soldering object part.

* 1 Soldering iron temperature should not exceed 400 °C and should not be applied for mor than 5 seconds.
* 2 Profile be careful because there is a margin of error in the way of measuring.
* 3 The temperature depend on the size and the package density of the substrate.
  Therefore, confirm every kind of the substrate.

● Soldering temperature-time profile to recommend

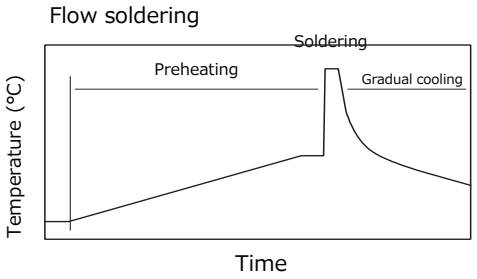

Preheating	The normal to 130 °C	max. 120 s
Soldering	max. 260 °C	max. 10 s
Gradual cooling	Gradual cooling	

4) Long-term storage
(1) Do not store the ZNR under high temperature and high humidity. Store it indoor environment at a temperature up to 40 °C and at humidity below 75 %RH, and use it within two years.
Before using the ZNR that has been stored for a long period(two years or longer), confirm the solderability.
(2) Avoid atmospheres full of corrosive gases (hydrogen sulfide, sulfurous acid, chlorine, ammonia, etc.).
(3) Avoid direct sunlight and dew condensation.

5) Rated Voltage for UL or other safety certifications
Our ZNR define " Max. Allowable Voltage" and "Rated Voltage " to keep leakage current specification and others. If you getting certificate of safety approval about your equipment with our ZNR, please follow our "Rated Voltage".

6) Dropped product
Do not drop this product on the floor. If this product is dropped, it can be damaged mechanically or electrically. Avoid using the dropped product.

3. Notices

3.1 Our ZNR was designed and manufactured for standard applications such as general electronics devices, office equipment, information and communications equipment, measuring instruments, household appliances and audio-video equipment.For applications in which special quality and reliability are required, or if the failure or malfunction of the products may directly jeopardize life or cause threat of personal injury (such as for aircraft and aerospace equipment, traffic and transport equipment, combustion equipment, medical equipment, accident prevention and anti-theft devices, and safety equipment), please be sure to consult with our sales representative in advance and to exchange product specifications which conform to such applications. applications in which special quality and reliability are required, or if the failure or malfunction of the products may.

3.2 Note that we do not take any responsibility for faults and abnormalities resulting from the use not in conformity with the contents of entries in the delivery specification.

3.3 There is a possibility that the ZNR will unexpectedly cause smoke or ignite because of an abnormal rise of the circuit voltage and invasion of excessive surge. To prevent that accident from spreading over the equipment and not to expand the damage, use multiplex protection such as the adoption of frame-retardant materials for housing parts and structural parts.

4. Applicable laws and regulations , others

4.1 This product not been manufactured with any ozone depleting chemical controlled under the Montreal Protocol.

4.2 This product comply with RoHS(Restriction of the use of certain Hazardous Substance in electrical and electronic equipment) (DIRECTIVE 2011/65/EU and (EU)2015/863).

4.3 All the materials used in this part are registered material under the Law Concerning the Examination and Regulationof Manufacture, etc. of Chemical Substance.

4.4 If you need the notice by letter of "A preliminary judgement on the Laws of Japan foreign exchange and Foreign Trade Control", be sure to let us know.

4.5 These products are not dangerous goods on the transportation as identified by UN(United nations) numbers or UN classification.

5. Others

5.1 As to the disposal of ZNR, check the method of disposal in each country or origin where the ZNR are incorporated in your products to be used.

5.2 The technical information in this specification provides example of our products' typical operations and application circuit. We do not guarantee the non-infringement of third party's intellectual property rights and we do not grant any license, right or interest in our intellectual property.

Mouser Electronics

Authorized Distributor

Click to View Pricing, Inventory, Delivery & Lifecycle Information:

Panasonic:
ERZ-E14A681SC ERZ-E14A271SC ERZ-E14A331SC ERZ-E14A681S1 ERZ-E14A751S1 ERZ-E14A221S1 ERZ-E14A201SC ERZ-E14A221SC ERZ-E14A511SC ERZ-E14A561SC ERZ-E14A821S1 ERZ-E14A361SC ERZ-E14A112SC ERZ-E14A201S1 ERZ-E14A431SC ERZ-E14A471S1 ERZ-E14A471SC ERZ-E14A511S1 ERZ-E14A102S1 ERZ-E14A241S1 ERZ-E14A561S1 ERZ-E14A911S1 ERZ-E14A241SC ERZ-E14A391S1 ERZ-E14A431S1 ERZ-E14A271S1 ERZ-E14A331S1 ERZ-E14A361S1 ERZ-E14A621SC ERZ-E14A102SC ERZ-E14A391SC ERZ-E14A621S1 ERZ-E14A751SC ERZ-E14A821SC ERZ-E14A112S1 ERZ-E14A911SC

Общество с ограниченной ответственностью «МосЧип» ИНН 7719860671 / КПП 771901001
Адрес: 105318, г.Москва, ул.Щербаковская д.3, офис 1107

Данный компонент на территории Российской Федерации

Вы можете приобрести в компании MosChip.

Для оперативного оформления запроса Вам необходимо перейти по данной ссылке:

http://moschip.ru/get-element

Вы можете разместить у нас заказ для любого Вашего проекта, будь то серийное производство или разработка единичного прибора.

В нашем ассортименте представлены ведущие мировые производители активных и пассивных электронных компонентов.

Нашей специализацией является поставка электронной компонентной базы двойного назначения, продукции таких производителей как XILINX, Intel (ex.ALTERA), Vicor, Microchip, Texas Instruments, Analog Devices, Mini-Circuits, Amphenol, Glenair.

Сотрудничество с глобальными дистрибьюторами электронных компонентов, предоставляет возможность заказывать и получать с международных складов практически любой перечень компонентов в оптимальные для Вас сроки.

На всех этапах разработки и производства наши партнеры могут получить квалифицированную поддержку опытных инженеров.

Система менеджмента качества компании отвечает требованиям в соответствии с ГОСТ Р ИСО 9001, ГОСТ РВ 0015-002 и ЭС РД 009

Офис по работе с юридическими лицами:

105318, г.Москва, ул.Щербаковская д.3, офис 1107, 1118, ДЦ «Щербаковский»

Телефон: +7 495 668-12-70 (многоканальный)

Факс: +7 495 668-12-70 (доб.304)

E-mail: info@moschip.ru

Skype отдела продаж:
moschip.ru
moschip.ru_4
moschip.ru_6
moschip.ru_9