THE INFORMATION CONTAINED HEREIN IS CONSIDERED "PROPRIETARY" TO BEL FUSE INC. AND SHALL NOT BE COPIED, REPRODUCED OR DISCLOSED WITHOUT THE WRITTEN APPROVAL OF BEL FUSE INC.

LED1 POLARITY			LED2 POLARITY		
PIN 13	PIN 14	COLOR	PIN 15	PIN 16	COLOR
-	+	YELLOW	-	+	GREEN

PRELIMINARY

RoHS HF

ELECTRICAL CHARACTERISTICS @ 25°C

TURNS RATIO
- TX 1CT : 1
- RX 1CT : 1

OCL @ 100kHz/100mVRMS (0-70°C)
- 8mA DC BIAS 350µH MIN.

INS. LOSS
- 0.1MHz TO 1MHz -1.1 dB MAX
- 1MHz TO 65MHz -0.5 dB MAX
- 65MHz TO 100MHz -0.8 dB MAX
- 100MHz TO 125MHz -1.2 dB MAX

RET. LOSS (MIN) @ 100 OHMS +/- 15%
- 0.5MHz-40MHz -18 dB
- 40MHz-100MHz -12+20LOG(f/80MHz) dB

CM TO CM REJ
- 100kHz - 100MHz -30 dB MIN

CM TO DM REJ
- 100kHz - 100MHz -35 dB MIN

HIPOT (Isolation Voltage): 1500 Vrms or 2250 VDC
- 100% OF PRODUCT TESTED IN PRODUCTION

LED 1
- VF (FORWARD VOLTAGE) IF=20mA YELLOW 2.1V TYP.
- λD (DOMINANT WAVELENGTH) IF=20mA YELLOW 590nm TYP.

LED 2
- VF (FORWARD VOLTAGE) IF=20mA GREEN 2.2V TYP.
- λD (DOMINANT WAVELENGTH) IF=20mA GREEN 570nm TYP.

OPERATING TEMPERATURE: -40 TO +100°C

SCHEMATIC

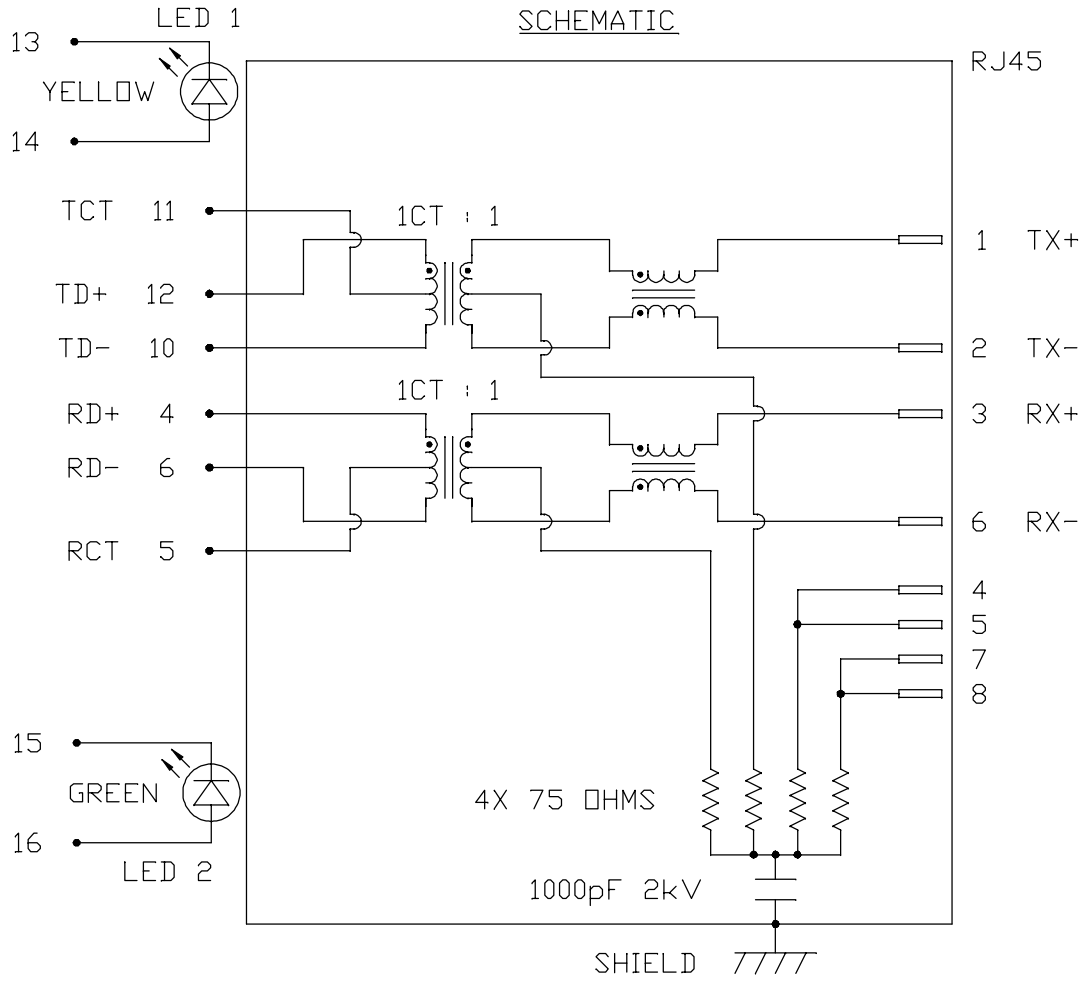

REV. : PA | PAGE : 2

ORIGINATED BY CHOW WANCHUNG DATE 2018-10-09	TITLE 10/100 MagJack® (Ultra Low Profile) Automotive temperature A829-1A1T-91B PATENTED	PART NO. / DRAWING NO. A829-1A1T91B	STANDARD DIM. TOL. IN INCH	[ ] METRIC DIM. AS REF.
DRAWN BY XIE YIMING DATE 2018-10-09		FILE NAME A829-1A1T91B_PA.DWG	.X / .XX / .XXX	UNIT : INCH [mm]
				SCALE : N/A
				SIZE : A4

bel MAGNETIC SOLUTIONS a bel group

This document is electronically generated. This is a controlled copy if used internally

THE INFORMATION CONTAINED HEREIN IS CONSIDERED "PROPRIETARY" TO BEL FUSE INC. AND SHALL NOT BE COPIED, REPRODUCED OR DISCLOSED WITHOUT THE WRITTEN APPROVAL OF BEL FUSE INC.

PRELIMINARY

RoHS HF

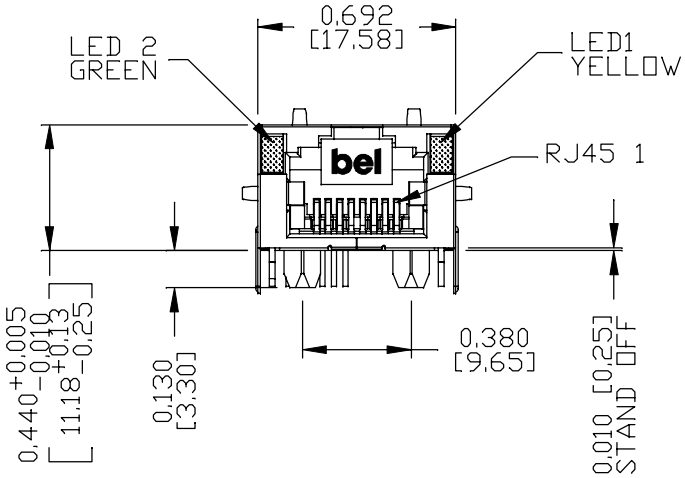

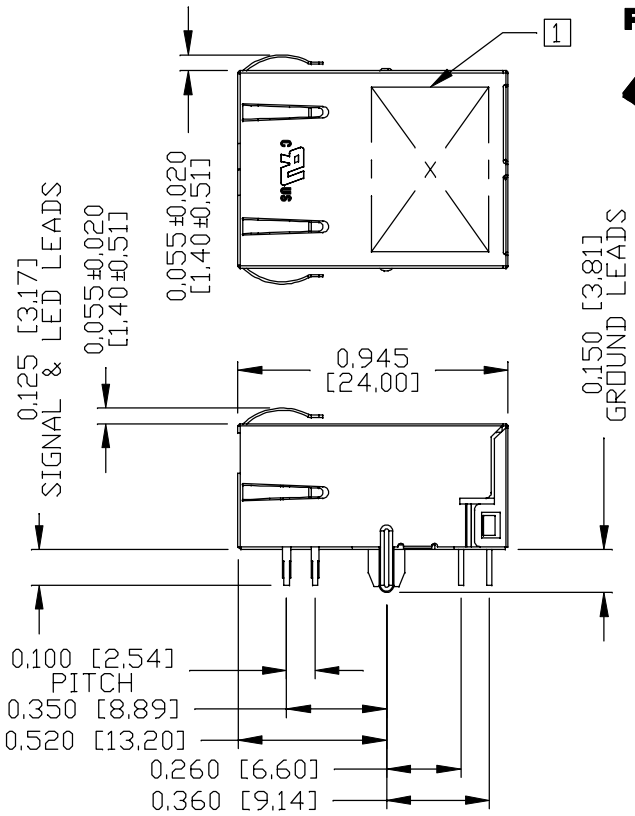

NOTES:

PLASTIC HOUSING: THERMOPLASTIC PA, BLACK
FLAMMABILITY RATING UL 94V-0

CONTACTS: 50 MICRO-INCH HARD GOLD PLATING OR EQUIVALENT.

OUTPUT PINS: TIN-COATED COPPER WIRE, DIA 0.018 INCH.
100 MICRO-INCH MIN MATTE TIN.
PINS ARE SOLDER DIPPED.

METAL SHIELD: NICKEL PLATED ON COPPER ALLOY.
(ALL GROUND LEADS ARE SOLDER DIPPED)

1. MARK PART WITH MFG. LOGO, MFG. NAME, PART NUMBER, DATE CODE AND PATENTED.
2. THE PRODUCT IS RoHS COMPLIANT WITH NO EXEMPTION AND HALOGEN FREE.

c UL us UL RECOGNIZED - FILE #E196366 AND E169987.

3. JACK CAVITY CONFORMS TO FCC RULES AND REGULATIONS, PART 68 SUBPART F.
4. THE PRODUCT IS PATENTED. THE PATENT NUMBER IS U.S PAT. 6,840,817.
5. THE PART IS RECOMMENDED FOR WAVE SOLDERING. THE SUGGESTED PEAK WAVE SOLDERING CONDITION IS 260°C MAX AND 10 SECONDS MAX.
6. THE PRODUCT IS DESIGNED TO BE COMPATIBLE WITH THE SAE/USCAR2-6 STANDARD, TEMPERATURE CLASS T2, SEALING CLASS S1 AND VIBRATION CLASS V1.

REV. : PA				PAGE : 3	
ORIGINATED BY ANTON LIAO DATE 2018-10-09	TITLE 10/100 MagJack® (Ultra Low Profile) Automotive temperature A829-1A1T-91B PATENTED	PART NO. / DRAWING NO. A829-1A1T91B	STANDARD DIM. TOL. IN INCH	[ ] METRIC DIM. AS REF.	bel MAGNETIC SOLUTIONS a bel group
DRAWN BY LI QUANKUN DATE 2018-10-09		FILE NAME A829-1A1T91B_PA.DWG	.X / .XX / .XXX ±0.010	UNIT : INCH [mm] SCALE : N/A SIZE : A4	

This document is electronically generated. This is a controlled copy if used internally

THE INFORMATION CONTAINED HEREIN IS CONSIDERED "PROPRIETARY" TO BEL FUSE INC. AND SHALL NOT BE COPIED, REPRODUCED OR DISCLOSED WITHOUT THE WRITTEN APPROVAL OF BEL FUSE INC.

PRELIMINARY

RoHS HF

RECOMMENDED PCB FOOTPRINT

COMPONENT SIDE VIEW

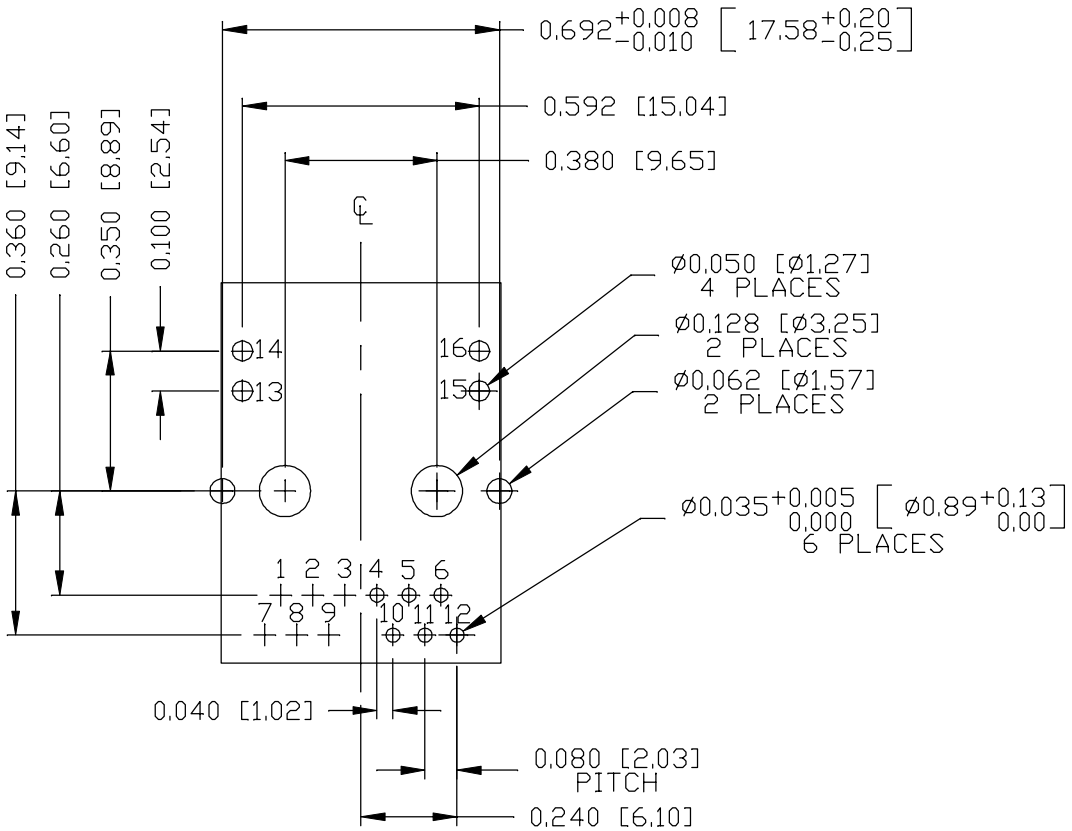

REV. : PA	PAGE : 4				
ORIGINATED BY ANTON LIAO DATE 2018-10-09	TITLE 10/100 MagJack® (Ultra Low Profile) Automotive temperature A829-1A1T-91B PATENTED	PART NO. / DRAWING NO. A829-1A1T91B	STANDARD DIM. TOL. IN INCH	[ ] METRIC DIM. AS REF.	bel MAGNETIC SOLUTIONS a bel group
DRAWN BY LI QUANKUN DATE 2018-10-09		FILE NAME A829-1A1T91B_PA.DWG	.X / .XX / .XXX ±0.004	UNIT : INCH [mm] SCALE : N/A SIZE : A4	

This document is electronically generated. This is a controlled copy if used internally

THE INFORMATION CONTAINED HEREIN IS CONSIDERED "PROPRIETARY" TO BEL FUSE INC. AND SHALL NOT BE COPIED, REPRODUCED OR DISCLOSED WITHOUT THE WRITTEN APPROVAL OF BEL FUSE INC.

SUGGESTED PANEL OPENING

PRELIMINARY

RoHS HF

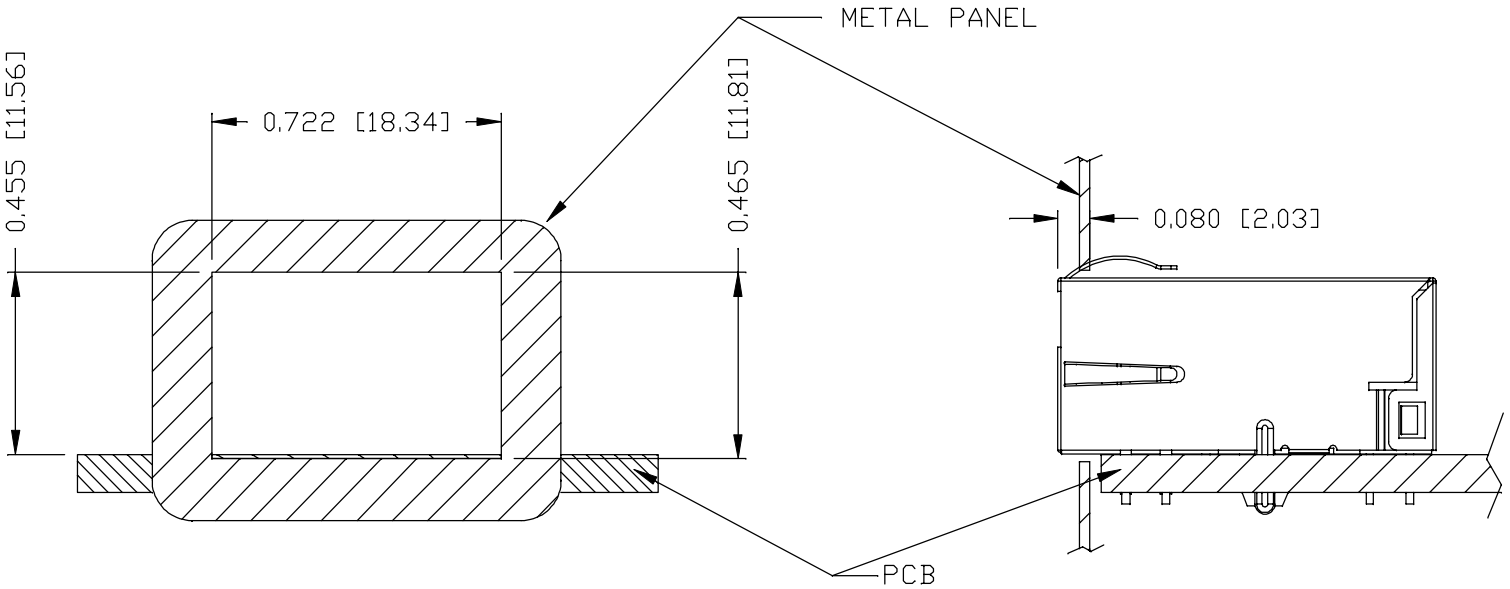

NOTE:

THE DISTANCE OF PANEL INSIDE SURFACE RELATIVE TO FRONT SURFACE OF PART IS ONLY A SUGGESTION. IN CASE THIS DISTANCE IS DIFFERENT, THE REQUIRED PANEL OPENING DIMENSIONS CHANGE ACCORDINGLY.

TRAY PACKING INFORMATION

PACKING TRAY : 0200-9999-E4 (TOP)
0200-9999-E5 (BOTTOM)

PACKING QUANTITY : 60 PCS FINISHED GOODS PER TRAY
11 TRAYS (660 PCS FINISHED GOODS) PER CARTON BOX

NOTE : CARDBOARDS ARE PLACED BETWEEN LAYERS OF PACKING TRAY INSIDE CARTON BOX (INCLUDE THE UPPERMOST AND LOWERMOST TRAY)

REV. : PA					PAGE : 5
ORIGINATED BY ANTON LIAO DATE 2018-10-09	TITLE 10/100 MagJack® (Ultra Low Profile) Automotive temperature A829-1A1T-91B PATENTED	PART NO. / DRAWING NO. A829-1A1T91B	STANDARD DIM. TOL. IN INCH	[ ] METRIC DIM. AS REF.	bel MAGNETIC SOLUTIONS a bel group
DRAWN BY LI QUANKUN DATE 2018-10-09		FILE NAME A829-1A1T91B_PA.DWG	.X / .XX / .XXX ±0.005	UNIT : INCH [mm] SCALE : N/A SIZE : A4	

This document is electronically generated. This is a controlled copy if used internally

Общество с ограниченной ответственностью «МосЧип» ИНН 7719860671 / КПП 771901001
Адрес: 105318, г.Москва, ул.Щербаковская д.3, офис 1107

Данный компонент на территории Российской Федерации

Вы можете приобрести в компании MosChip.

Для оперативного оформления запроса Вам необходимо перейти по данной ссылке:

http://moschip.ru/get-element

Вы можете разместить у нас заказ для любого Вашего проекта, будь то серийное производство или разработка единичного прибора.

В нашем ассортименте представлены ведущие мировые производители активных и пассивных электронных компонентов.

Нашей специализацией является поставка электронной компонентной базы двойного назначения, продукции таких производителей как XILINX, Intel (ex.ALTERA), Vicor, Microchip, Texas Instruments, Analog Devices, Mini-Circuits, Amphenol, Glenair.

Сотрудничество с глобальными дистрибьюторами электронных компонентов, предоставляет возможность заказывать и получать с международных складов практически любой перечень компонентов в оптимальные для Вас сроки.

На всех этапах разработки и производства наши партнеры могут получить квалифицированную поддержку опытных инженеров.

Система менеджмента качества компании отвечает требованиям в соответствии с ГОСТ Р ИСО 9001, ГОСТ РВ 0015-002 и ЭС РД 009

Офис по работе с юридическими лицами:

105318, г.Москва, ул.Щербаковская д.3, офис 1107, 1118, ДЦ «Щербаковский»

Телефон: +7 495 668-12-70 (многоканальный)

Факс: +7 495 668-12-70 (доб.304)

E-mail: info@moschip.ru

Skype отдела продаж:
moschip.ru
moschip.ru_4
moschip.ru_6
moschip.ru_9