Photologic® Slotted Optical Switch
OPB960, OPB970, OPB980, OPB990 Series

TT electronics
OPTEK Technology

Features:

- Choice of logic and output driver circuits
- Choice of aperture size, covered or open
- Wire or PCB leads
- Choice of mounting features
- Direct TTL, LSTTL, CMOS Interface

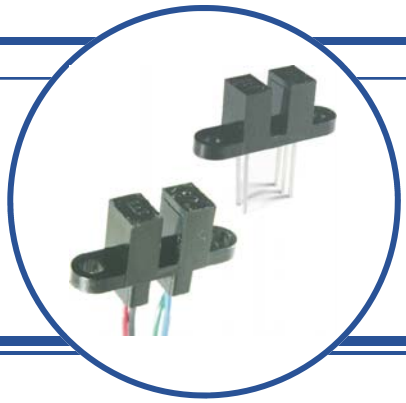

Description:

The OPB960/ 970/ 980/ 990 series of non-contact Photologic® slotted optical switches provides flexibility in meeting application specific requirements for the design engineer.

Building from a standard housing with a 0.125" (3.18mm) wide slot, the user can specify output logic state, output driver circuit, aperture width, aperture surface and mounting tab locations. Furthermore, an option of wire or PCB leads allows electrical interface flexibility.

The device body is an opaque plastic which minimizes sensitivity to both visible and near-infrared external light sources which may impact operation. Aperture width choices provide different optical resolution for motion sensing. A covered aperture provides dust protection, while an open aperture provides maximum protection against external light sources.

Electrical operation is over a wide supply voltage range. LED emissions are near-infrared (850—940nm).
Detector digital output logic choices of buffer or inverter with totem-pole or open-collector driver circuit simplify interface for various electrical requirements.

Custom electrical, wire and cabling services are available.
Contact your local representative or OPTEK for more information. Compliant to EU RoHS Directive 2002/95/EC .

Applications:

For more information see Application notes 201, 213

- Speed and direction indication
- Rotary encoders
- Mechanical switch replacement
- Mechanical limit indication
- Printers - Top of form, End of travel, Home position.
- Sliding Door Automotive and Lift gate applications

Part Number Guide

OPB 9XX X XX X

OPTEK Assembly

Photologic® Sensor Family

Slot Aperture Surface and Lead Options:
6 — Covered (apertures not visible), PCB leads
7 — Open (apertures visible), PCB leads
8 — Covered (apertures not visible), Wires
9 — Open (apertures visible), Wires

Logic and Output Driver Types:
0 — Buffer Totem-Pole
1 — Buffer Open-Collector
2 — Inverter Totem-Pole
3 — Inverter Open-Collector

Z = Wires only, None for PCB leads

Aperture Width Guide Options:
55, 51, 11 (See Aperture Width Guide)

Mounting Tab Location:
L — Emitter
N — None
P — Sensor
T — Both (two mounting tabs)

Logic Type	Input LED	Output Logic State
Buffer	OFF	LOW = 0
Inverter	OFF	HIGH = 1

RoHS

OPTEK reserves the right to make any changes at any time in order to improve design and to supply the best product possible.

PACKAGE OUTLINE for OPB960 and OPB970 Series

TABLE 1

Lead No.	Function
1	Anode
2	Cathode
3	Vcc
4	Output
5	Ground

APERTURE WIDTH GUIDE		
CODE	LED	SENSOR
55	.050” [1.27mm]	.050” [1.27mm]
51	.050” [1.27mm]	.010” [0.25mm]
11	.010” [0.25mm]	.010” [0.25mm]
Lengths are .050” [1.27mm]		

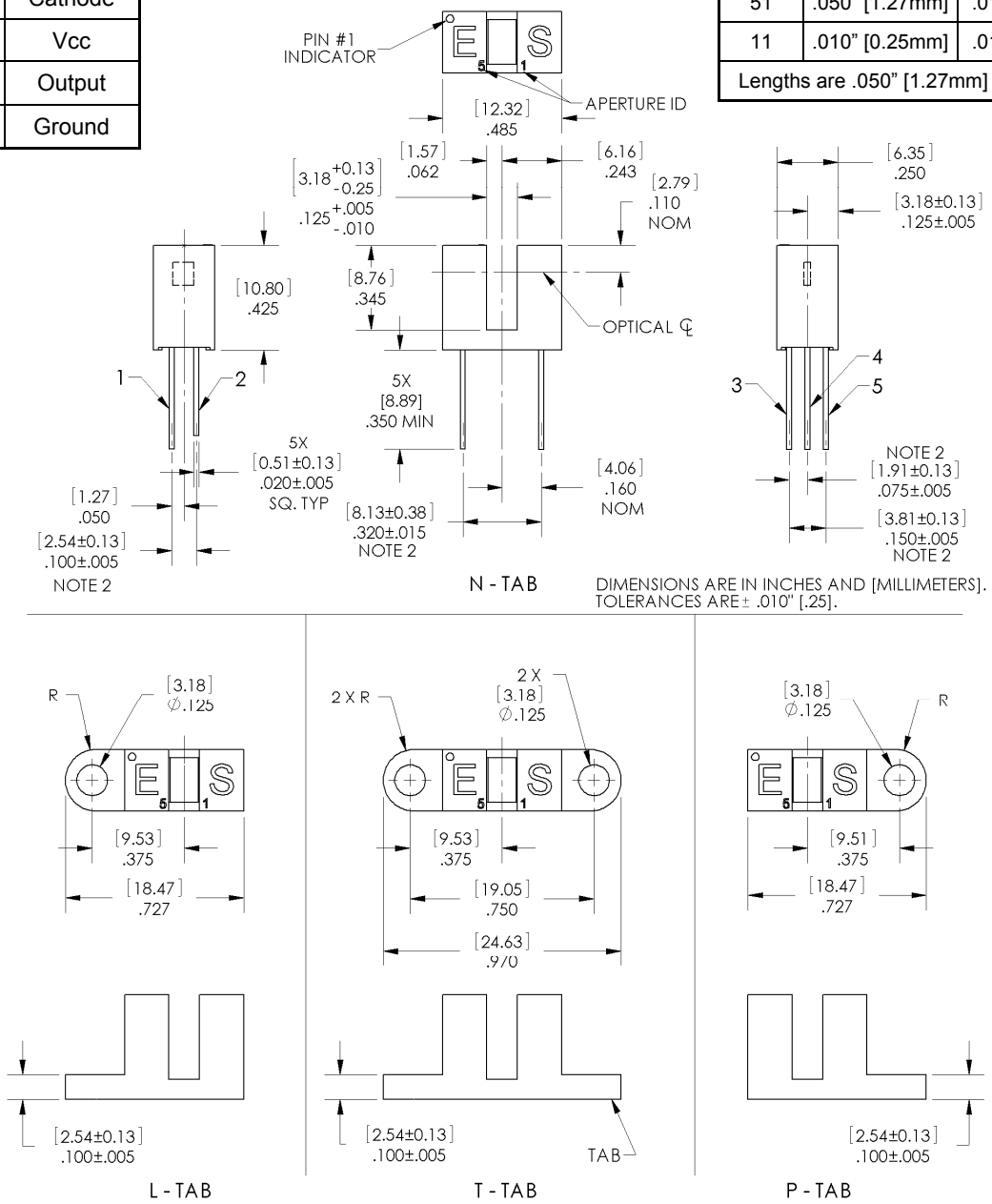

Notes:
(1) RMA flux recommended. Duration can be extended to 10 seconds max.
(2) Feature controlled at body.
(3) Highly activated water soluble fluxes may attack plastic. Recommend trial to verify application.
(4) Maximum lead soldering temperature [1.6mm from case for 5 seconds with soldering iron] 260° C.
(5) Cathode lead may be shorter.
(6) Part number marking may be on any side.

OPTEK reserves the right to make any changes at any time in order to improve design and to supply the best product possible.

OPTEK Technology Inc. — 1645 Wallace Drive, Carrollton, Texas 75006
Phone: (972) 323-2200 or (800) 341-4747 FAX: (972) 323-2396 sensors@optekinc.com www.optekinc.com

PACKAGE OUTLINE for OPB980 and OPB990 Series

TABLE 2

Wire Color	Function
Red	Anode
Black	Cathode
White	Vcc
Blue	Output
Green	Ground

APERTURE WIDTH GUIDE		
CODE	LED	SENSOR
55	.050" [1.27mm]	.050" [1.27mm]
51	.050" [1.27mm]	.010" [0.25mm]
11	.010" [0.25mm]	.010" [0.25mm]
Lengths are .050" [1.27mm]		

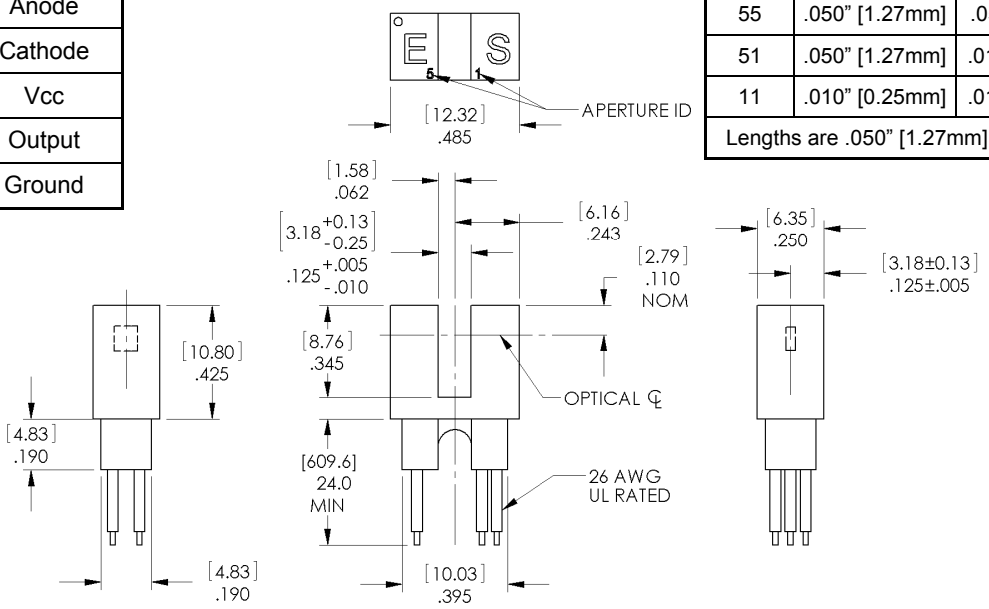

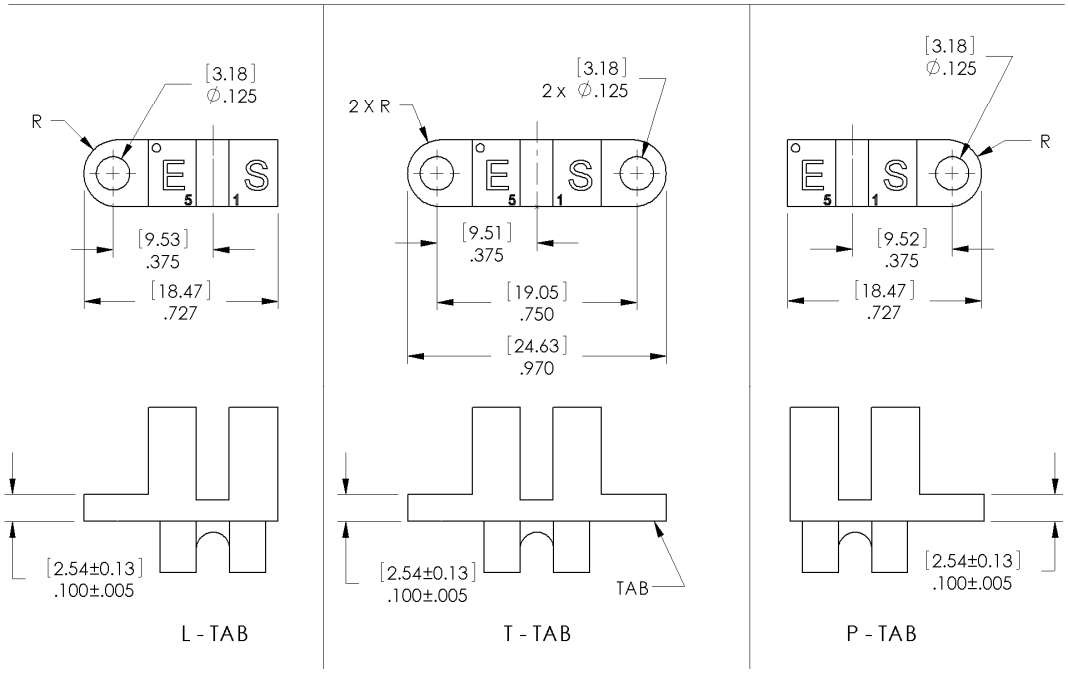

Notes:

(7) Wire is 26AWG, UL Rated PVC insulation.
(8) Ideal torque for bolt or screw 0,45 to 0,68 Nm (4 to 6 Lb-in).
(9) When using a thread lock compound, ND Industries "ND Vibra-Tite® Formula 3" will avoid stress cracking plastic.
(10) Plastic is soluble in chlorinated hydrocarbons and ketones. Methanol or isopropanol are recommended as cleaning agents.

OPTEK reserves the right to make any changes at any time in order to improve design and to supply the best product possible.

Absolute Maximum Ratings

Storage Temperature Range	-40°C to +85° C
Operating Temperature Range	-40°C to +70° C
Input Diode (E)	
Input Diode Power Dissipation	100 mW (11)
Input Diode Forward D.C. Current, T_A = 25°C	40 mA(14)
Input Diode Reverse D.C. Voltage, T_A = 25°C	2 V
Sensor (S)	
Supply Voltage (V_{CC} to Ground)	18 V (13)
Output Photologic® Power Dissipation	200 mW (12)
Voltage at Output Lead (Open-Collector Output), T_A = 25°C	35V
Short Circuit Output Current to Ground (I_{OS}) 1 sec Max.	30 mA

Notes:
(11) Derate linearly 2.22 mW / °C above 25° C.
(12) Derate linearly 4.44 mW / °C above 25° C.
(13) Prior to 2004 Vcc was limited to 5.5V maximum.
(14) Do not connect input diode directly to a voltage source without an external current limiting resistor.

Block Diagram

Buffer Totem-Pole
OPB960/ OPB970/ OPB980/ OPB990

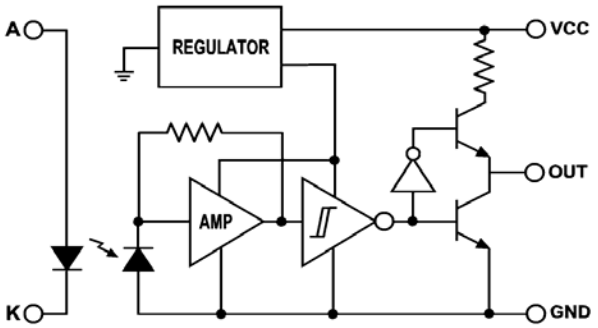

Buffer Open-Collector
OPB961/ OPB971/ OPB981/ OPB991

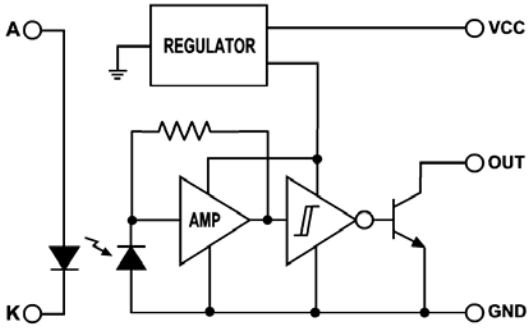

Inverter Totem-Pole
OPB962/ OPB972/ OPB982/ OPB992

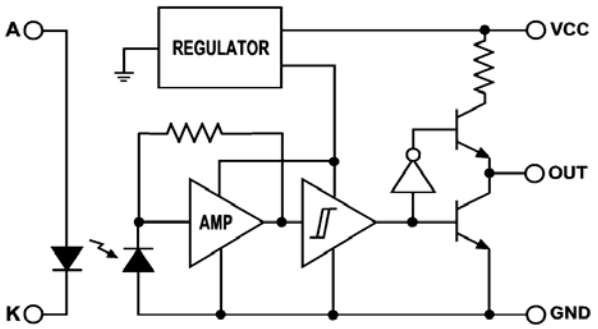

Inverter Open-Collector
OPB963/ OPB973/ OPB983/ OPB993

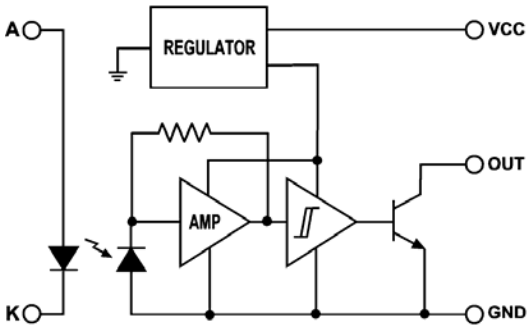

OPTEK reserves the right to make any changes at any time in order to improve design and to supply the best product possible.

OPTEK Technology Inc. — 1645 Wallace Drive, Carrollton, Texas 75006
Phone: (972) 323-2200 or (800) 341-4747 FAX: (972) 323-2396 sensors@optekinc.com www.optekinc.com

Electrical Characteristics (T_A = -40° C to +70° C unless otherwise noted)

SYMBOL	PARAMETER	MIN	TYP	MAX	UNITS	TEST CONDITIONS
Input Diode (See OP140 / OP240 LED for additional information)						
V_F	Forward Voltage	-	-	1.70	V	I_F = 20 mA, T_A = 25° C
I_R	Reverse Current	-	-	100	µA	V_R = 2.0 V, T_A = 25° C
Coupled (See OPL560 Detector for additional information)						
V_{CC}	Operating D.C. Supply Voltage	4.5	-	16	V	
I_{CC}	Supply Current	-	-	12	mA	V_{CC} = 4.5V to 16V
V_{OL}	Low Level Output Voltage: Buffer Totem-Pole OPB960,OPB970 OPB980,OPB990 Buffer Open-Collector OPB961,OPB971 OPB981,OPB991	-	-	0.4	V	V_{CC} = 4.5V, I_{OL} = 12.8mA I_F = 0 mA (14)
	Inverter Totem-Pole OPB962,OPB972 OPB982,OPB992 Inverter Open-Collector OPB963,OPB973 OPB983,OPB993					V_{CC} = 4.5V, I_{OL} = 12.8mA I_F = 15 mA
V_{OH}	High Level Output Voltage: Buffer Totem-Pole OPB960,OPB970 OPB980,OPB990	V_{CC} -2.1	-	-	V	V_{CC} = 4.5V to 16V, I_{OH} = -800µA I_F = 15 mA
	Inverter Totem-Pole OPB962,OPB972 OPB982,OPB992					V_{CC} = 4.5V to 16V, I_{OH} = -800µA I_F = 0 mA (14)
I_{OH}	High Level Output Current: Buffer Open-Collector OPB961,OPB971 OPB981,OPB991	-	-	100	µA	V_{CC} = 4.5V to 16V, V_{OH} = 30V I_F = 15 mA
	Inverter Open-Collector OPB963,OPB973 OPB981,OPB991					V_{CC} = 4.5V to 16V, V_{OH} = 30V I_F = 0 mA (14)
$I_F(+)$	LED Positive-Going Threshold Current(16)	-	-	15	mA	V_{CC} = 5.0V, T_A = 25° C
$I_F(+)$ / $I_F(-)$	Hysteresis Ratio	-	1.5	-	-	V_{CC} = 5.0V
t_R, t_F	Output Rise Time, Output Fall Time	-	70	-	ns	V_{CC} = 5.0V, $I_{F\ peak}$= 15 mA, T_A = 25° C 100 kHz square wave, C = 10pF max. R_L = 360 Ω to GND (Totem-Pole) R_L = 1KΩ pull-up (Open-Collector)
t_{PLH}, t_{PHL}	Propagation Delay Time Low to High, High to Low	-	5.0	-	µs	

Notes:
14) Normal application would be with light source blocked, simulated by I_F = 0 mA.
15) All parameters are tested using pulse techniques.
16) An increasing current applied to the LED which causes the output logic state to change. For proper application IF(+), LED current, should be more than the stated maximum.

OPTEK reserves the right to make any changes at any time in order to improve design and to supply the best product possible.

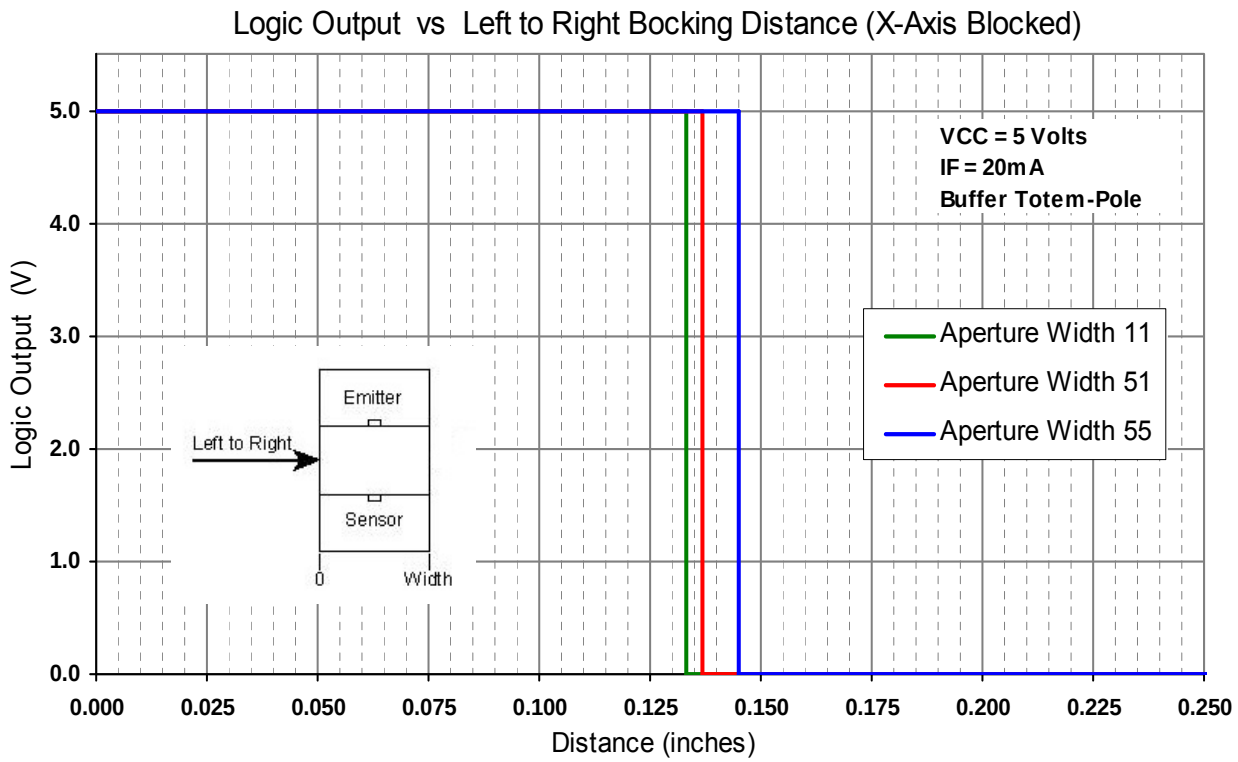

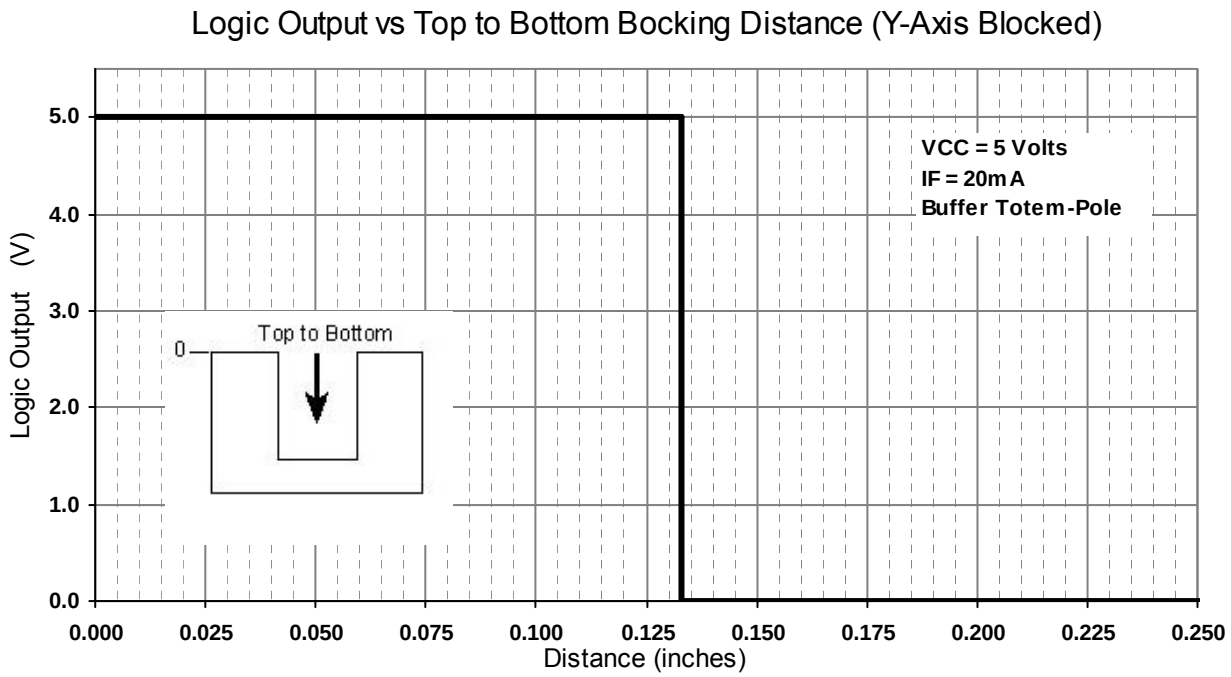

OPTEK reserves the right to make any changes at any time in order to improve design and to supply the best product possible.

OPTEK Technology Inc. — 1645 Wallace Drive, Carrollton, Texas 75006
Phone: (972) 323-2200 or (800) 341-4747 FAX: (972) 323-2396 sensors@optekinc.com www.optekinc.com

Общество с ограниченной ответственностью «МосЧип» ИНН 7719860671 / КПП 771901001
Адрес: 105318, г.Москва, ул.Щербаковская д.3, офис 1107

Данный компонент на территории Российской Федерации

Вы можете приобрести в компании MosChip.

Для оперативного оформления запроса Вам необходимо перейти по данной ссылке:

http://moschip.ru/get-element

Вы можете разместить у нас заказ для любого Вашего проекта, будь то серийное производство или разработка единичного прибора.

В нашем ассортименте представлены ведущие мировые производители активных и пассивных электронных компонентов.

Нашей специализацией является поставка электронной компонентной базы двойного назначения, продукции таких производителей как XILINX, Intel (ex.ALTERA), Vicor, Microchip, Texas Instruments, Analog Devices, Mini-Circuits, Amphenol, Glenair.

Сотрудничество с глобальными дистрибьюторами электронных компонентов, предоставляет возможность заказывать и получать с международных складов практически любой перечень компонентов в оптимальные для Вас сроки.

На всех этапах разработки и производства наши партнеры могут получить квалифицированную поддержку опытных инженеров.

Система менеджмента качества компании отвечает требованиям в соответствии с ГОСТ Р ИСО 9001, ГОСТ РВ 0015-002 и ЭС РД 009

Офис по работе с юридическими лицами:

105318, г.Москва, ул.Щербаковская д.3, офис 1107, 1118, ДЦ «Щербаковский»

Телефон: +7 495 668-12-70 (многоканальный)

Факс: +7 495 668-12-70 (доб.304)

E-mail: info@moschip.ru

Skype отдела продаж:
moschip.ru
moschip.ru_4
moschip.ru_6
moschip.ru_9