dsPIC33EPXXGS50X FAMILY

16-Bit Digital Signal Controllers for Digital Power Applications with Interconnected High-Speed PWM, ADC, PGA and Comparators

Operating Conditions

- 3.0V to 3.6V, -40°C to +85°C, DC to 70 MIPS
- 3.0V to 3.6V, -40°C to +125°C, DC to 60 MIPS

Flash Architecture

- Dual Partition Flash Program Memory with Live Update (64-Kbyte devices):
  - Supports programming while operating
  - Supports partition soft swap

Core: 16-Bit dsPIC33E CPU

- Code-Efficient (C and Assembly) Architecture
- Two 40-Bit Wide Accumulators
- Single-Cycle (MAC/MPY) with Dual Data Fetch
- Single-Cycle Mixed-Sign MUL Plus Hardware Divide
- 32-Bit Multiply Support
- Two Additional Working Register Sets (reduces context switching)

Clock Management

- ±0.9% Internal Oscillator
- Programmable PLLs and Oscillator Clock Sources
- Fail-Safe Clock Monitor (FSCM)
- Independent Watchdog Timer (WDT)
- Fast Wake-up and Start-up

Power Management

- Low-Power Management modes (Sleep, Idle, Doze)
- Integrated Power-on Reset and Brown-out Reset
- 0.5 mA/MHz Dynamic Current (typical)
- 10 µA I_{PD} Current (typical)

High-Speed PWM

- Five PWM Generators (two outputs per generator)
- Individual Time Base and Duty Cycle for each PWM
- 1.04 ns PWM Resolution (frequency, duty cycle, dead time and phase)
- Supports Center-Aligned, Redundant, Complementary and True Independent Output modes
- Independent Fault and Current-Limit Inputs
- Output Override Control
- PWM Support for AC/DC, DC/DC, Inverters, PFC and Lighting

Advanced Analog Features

- High-Speed ADC module:
  - 12-bit with 4 dedicated SAR ADC cores and one shared SAR ADC core
  - Configurable resolution (up to 12-bit) for each ADC core
  - Up to 3.25 Msps conversion rate per channel at 12-bit resolution
  - 12 to 22 single-ended inputs
  - Dedicated result buffer for each analog channel
  - Flexible and independent ADC trigger sources
  - Two digital comparators
  - Two oversampling filters for increased resolution
- Four Rail-to-Rail Comparators with Hysteresis:
  - Dedicated 12-bit Digital-to-Analog Converter (DAC) for each analog comparator
  - Up to two DAC reference outputs
  - Up to two external reference inputs
- Two Programmable Gain Amplifiers:
  - Single-ended or independent ground reference
  - Five selectable gains (4x, 8x, 16x, 32x and 64x)
  - 40 MHz gain bandwidth

Interconnected SMPS Peripherals

- Reduces CPU Interaction to Improve Performance
- Flexible PWM Trigger Options for ADC Conversions
- High-Speed Comparator Truncates PWM (15 ns typical):
  - Supports Cycle-by-Cycle Current mode control
  - Current Reset mode (variable frequency)

Timers/Output Compare/Input Capture

- Five 16-Bit and up to Two 32-Bit Timers/Counters
- Four Output Compare (OC) modules, Configurable as Timers/Counters
- Four Input Capture (IC) modules

© 2013-2015 Microchip Technology Inc.

Communication Interfaces

- Two UART modules (15 Mbps):
  - Supports LIN/J2602 protocols and IrDA®
- Two 4-Wire SPI modules (15 Mbps)
- Two I²C™ modules (up to 1 Mbaud) with SMBus Support

Input/Output

- Constant-Current Source (10 µA nominal)
- Sink/Source up to 12mA/15mA, respectively; Pin-Specific for Standard VOH/VOL
- 5V Tolerant Pins
- Selectable, Open-Drain Pull-ups and Pull-Downs
- External Interrupts on All I/O Pins
- Peripheral Pin Select (PPS) to allow Function Remap with Six Virtual I/Os

Qualification and Class B Support

- AEC-Q100 REVG (Grade 1, -40°C to +125°C) Planned
- Class B Safety Library, IEC 60730
- The 6x6x0.5 mm UQFN Package is Designed and Optimized to ease IPC9592B 2nd Level Temperature Cycle Qualification

Debugger Development Support

- In-Circuit and In-Application Programming
- Five Program and Three Complex Data Breakpoints
- IEEE 1149.2 Compatible (JTAG) Boundary Scan
- Trace and Run-Time Watch

Device	Pins	Program Memory Bytes	RAM (Bytes)	General Purpose I/O (GPIO)	Remappable Peripherals								I²C™	12-Bit ADC		PGA	Analog Comparator	DAC Output	Constant-Current Source	Packages
					Timers(1)	Input Capture	Output Compare	UART	SPI	PWM(2)	External Interrupts(3)	Reference Clock		Analog Inputs	S&H Circuits					
dsPIC33EP16GS502	28	16K	2K	21	5	4	4	2	2	5x2	3	1	2	12	5	2	4	1	1	SOIC, QFN-S, UQFN
dsPIC33EP32GS502	28	32K	4K	21	5	4	4	2	2	5x2	3	1	2	12	5	2	4	1	1	
dsPIC33EP64GS502	28	64K	8K	21	5	4	4	2	2	5x2	3	1	2	12	5	2	4	1	1	
dsPIC33EP16GS504	44	16K	2K	35	5	4	4	2	2	5x2	3	1	2	19	5	2	4	1	1	QFN, TQFP
dsPIC33EP32GS504	44	32K	4K	35	5	4	4	2	2	5x2	3	1	2	19	5	2	4	1	1	
dsPIC33EP64GS504	44	64K	8K	35	5	4	4	2	2	5x2	3	1	2	19	5	2	4	1	1	
dsPIC33EP16GS505	48	16K	2K	35	5	4	4	2	2	5x2	3	1	2	19	5	2	4	1	1	TQFP
dsPIC33EP32GS505	48	32K	4K	35	5	4	4	2	2	5x2	3	1	2	19	5	2	4	1	1	
dsPIC33EP64GS505	48	64K	8K	35	5	4	4	2	2	5x2	3	1	2	19	5	2	4	1	1	
dsPIC33EP16GS506	64	16K	2K	53	5	4	4	2	2	5x2	4	1	2	22	5	2	4	2	1	TQFP
dsPIC33EP32GS506	64	32K	4K	53	5	4	4	2	2	5x2	4	1	2	22	5	2	4	2	1	
dsPIC33EP64GS506	64	64K	8K	53	5	4	4	2	2	5x2	4	1	2	22	5	2	4	2	1	

Note 1: The external clock for Timer1, Timer2 and Timer3 is remappable.
2: PWM4 and PWM5 are remappable.
3: External interrupts, INT0 and INT4, are not remappable.

© 2013-2015 Microchip Technology Inc.

Pin Diagrams

28-Pin SOIC

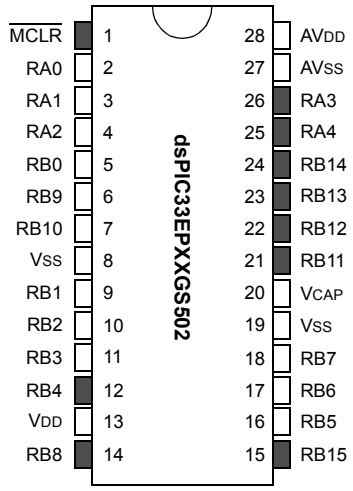

Pin	Pin Function	Pin	Pin Function
1	$\overline{\text{MCLR}}$	15	PGEC3/SCL2/**RP47**/RB15
2	AN0/PGA1P1/CMP1A/RA0	16	TDO/AN19/PGA2N2/**RP37**/RB5
3	AN1/PGA1P2/PGA2P1/CMP1B/RA1	17	PGED1/TDI/AN20/SCL1/**RP38**/RB6
4	AN2/PGA1P3/PGA2P2/CMP1C/CMP2A/RA2	18	PGEC1/AN21/SDA1/**RP39**/RB7
5	AN3/PGA2P3/CMP1D/CMP2B/**RP32**/RB0	19	VSS
6	AN4/CMP2C/CMP3A/ISRC4/**RP41**/RB9	20	VCAP
7	AN5/CMP2D/CMP3B/ISRC3/**RP42**/RB10	21	TMS/PWM3H/**RP43**/RB11
8	Vss	22	TCK/PWM3L/**RP44**/**R**B12
9	OSC1/CLKI/AN6/CMP3C/CMP4A/ISRC2/**RP33**/RB1	23	PWM2H/**RP45**/RB13
10	OSC2/CLKO/AN7/PGA1N2/CMP3D/CMP4B/**RP34**/RB2	24	PWM2L/**RP46**/RB14
11	PGED2/AN18/DACOUT1/INT0/**RP35**/RB3	25	PWM1H/RA4
12	PGEC2/ADTRG31/EXTREF1/RP36/RB4	26	PWM1L/RA3
13	VDD	27	AVSS
14	PGED3/SDA2/RP40/RB8	28	AVDD

Legend: **Shaded pins** are up to 5 VDC tolerant.
RPn represents remappable peripheral functions. See Table 10-1 and Table 10-2 for the complete list of remappable sources.

Pin Diagrams (Continued)

28-Pin QFN-S, UQFN

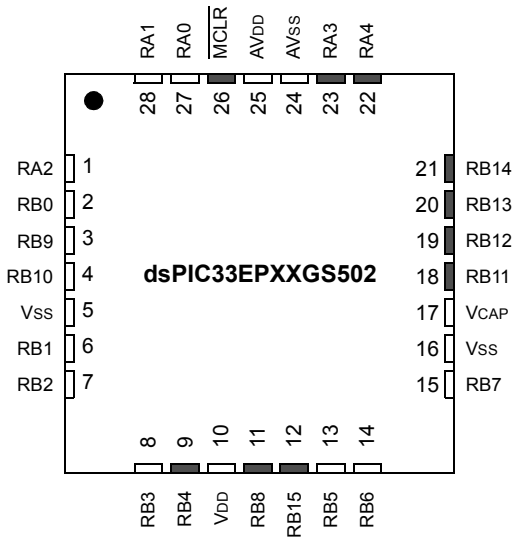

Pin	Pin Function	Pin	Pin Function
1	AN2/PGA1P3/PGA2P2/CMP1C/CMP2A/RA2	15	PGEC1/AN21/SDA1/**RP39**/RB7
2	AN3/PGA2P3/CMP1D/CMP2B/**RP32**/RB0	16	VSS
3	AN4/CMP2C/CMP3A/ISRC4/**RP41**/RB9	17	VCAP
4	AN5/CMP2D/CMP3B/ISRC3/**RP42**/RB10	18	TMS/PWM3H/**RP43**/RB11
5	Vss	19	TCK/PWM3L/**RP44**/**R**B12
6	OSC1/CLKI/AN6/CMP3C/CMP4A/ISRC2/**RP33**/RB1	20	PWM2H/**RP45**/RB13
7	OSC2/CLKO/AN7/PGA1N2/CMP3D/CMP4B/**RP34**/RB2	21	PWM2L/**RP46**/RB14
8	PGED2/AN18/DACOUT1/INT0/**RP35**/RB3	22	PWM1H/RA4
9	PGEC2/ADTRG31/EXTREF1/RP36/RB4	23	PWM1L/RA3
10	VDD	24	AVSS
11	PGED3/SDA2/RP40/RB8	25	AVDD
12	PGEC3/SCL2/**RP47**/RB15	26	$\overline{\text{MCLR}}$
13	TDO/AN19/PGA2N2/**RP37**/RB5	27	AN0/PGA1P1/CMP1A/RA0
14	PGED1/TDI/AN20/SCL1/**RP38**/RB6	28	AN1/PGA1P2/PGA2P1/CMP1B/RA1

Legend: **Shaded pins** are up to 5 VDC tolerant.
RPn represents remappable peripheral functions. See Table 10-1 and Table 10-2 for the complete list of remappable sources.

© 2013-2015 Microchip Technology Inc.

Pin Diagrams (Continued)

44-Pin QFN

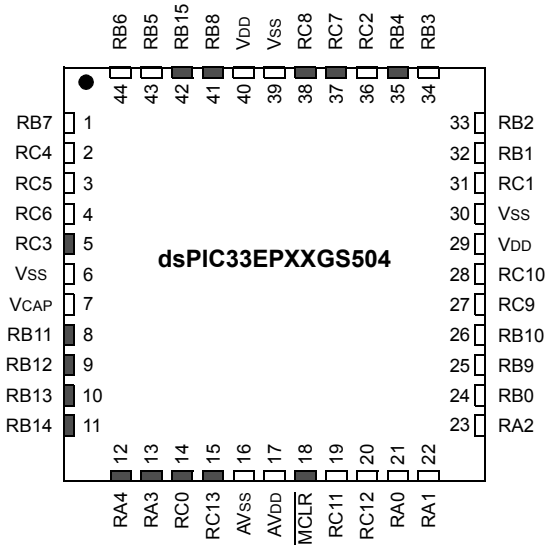

Pin	Pin Function	Pin	Pin Function
1	PGEC1/AN21/SDA1/**RP39**/RB7	23	AN2/PGA1P3/PGA2P2/CMP1C/CMP2A/RA2
2	AN1ALT/**RP52**/RC4	24	AN3/PGA2P3/CMP1D/CMP2B/**RP32**/RB0
3	AN0ALT/**RP53**/RC5	25	AN4/CMP2C/CMP3A/ISRC4/**RP41**/RB9
4	AN17/**RP54**/RC6	26	AN5/CMP2D/CMP3B/ISRC3/**RP42**/RB10
5	**RP51**/RC3	27	AN11/PGA1N3/**RP57**/RC9
6	VSS	28	AN10/PGA1P4/EXTREF2/**RP58**/RC10
7	VCAP	29	VDD
8	TMS/PWM3H/**RP43**/RB11	30	VSS
9	TCK/PWM3L/**RP44**/RB12	31	AN8/PGA2P4/CMP4C/**RP49**/RC1
10	PWM2H/**RP45**/RB13	32	OSC1/CLKI/AN6/CMP3C/CMP4A/ISRC2/**RP33**/RB1
11	PWM2L/**RP46**/RB14	33	OSC2/CLKO/AN7/PGA1N2/CMP3D/CMP4B/**RP34**/RB2
12	PWM1H/RA4	34	PGED2/AN18/DACOUT1/INT0/**RP35**/RB3
13	PWM1L/RA3	35	PGEC2/ADTRG31/**RP36**/RB4
14	FLT12/**RP48**/RC0	36	AN9/CMP4D/EXTREF1/**RP50** /RC2
15	FLT11/**RP61**/RC13	37	ASDA1/**RP55**/RC7
16	AVSS	38	ASCL1/**RP56**/RC8
17	AVDD	39	VSS
18	$\overline{\text{MCLR}}$	40	VDD
19	AN12/ISRC1/**RP59**/RC11	41	PGED3/SDA2/**RP40**/RB8
20	AN14/PGA2N3/**RP60**/RC12	42	PGEC3/SCL2/**RP47**/RB15
21	AN0/PGA1P1/CMP1A/RA0	43	TDO/AN19/PGA2N2/**RP37**/RB5
22	AN1/PGA1P2/PGA2P1/CMP1B/RA1	44	PGED1/TDI/AN20/SCL1/**RP38**/RB6

Legend: **Shaded pins** are up to 5 VDC tolerant.
RPn represents remappable peripheral functions. See Table 10-1 and Table 10-2 for the complete list of remappable sources.

Pin Diagrams (Continued)

44-Pin TQFP

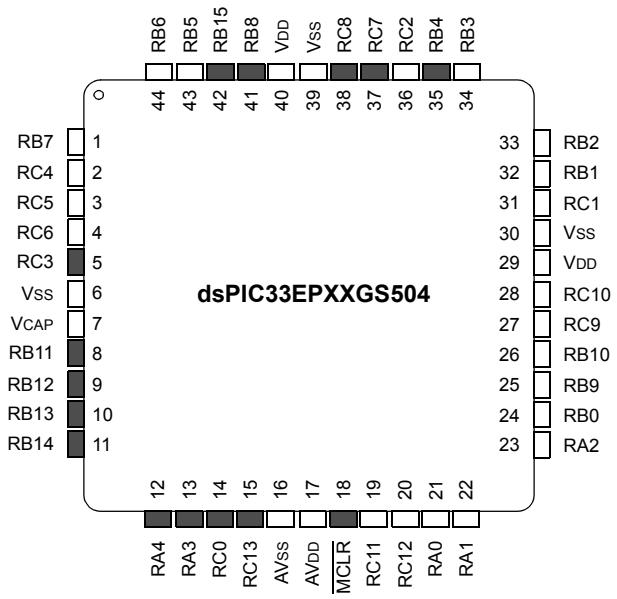

Pin	Pin Function	Pin	Pin Function
1	PGEC1/AN21/SDA1/**RP39**/RB7	23	AN2/PGA1P3/PGA2P2/CMP1C/CMP2A/RA2
2	AN1ALT/**RP52**/RC4	24	AN3/PGA2P3/CMP1D/CMP2B/**RP32**/RB0
3	AN0ALT/**RP53**/RC5	25	AN4/CMP2C/CMP3A/ISRC4/**RP41**/RB9
4	AN17/**RP54**/RC6	26	AN5/CMP2D/CMP3B/ISRC3/**RP42**/RB10
5	**RP51**/RC3	27	AN11/PGA1N3/**RP57**/RC9
6	VSS	28	AN10/PGA1P4/EXTREF2/**RP58**/RC10
7	VCAP	29	VDD
8	TMS/PWM3H/**RP43**/RB11	30	VSS
9	TCK/PWM3L/**RP44**/RB12	31	AN8/PGA2P4/CMP4C/**RP49**/RC1
10	PWM2H/**RP45**/RB13	32	OSC1/CLKI/AN6/CMP3C/CMP4A/ISRC2/**RP33**/RB1
11	PWM2L/**RP46**/RB14	33	OSC2/CLKO/AN7/PGA1N2/CMP3D/CMP4B/**RP34**/RB2
12	PWM1H/RA4	34	PGED2/AN18/DACOUT1/INT0/**RP35**/RB3
13	PWM1L/RA3	35	PGEC2/ADTRG31/**RP36**/RB4
14	FLT12/**RP48**/RC0	36	AN9/CMP4D/EXTREF1/**RP50** /RC2
15	FLT11/**RP61**/RC13	37	ASDA1/**RP55**/RC7
16	AVSS	38	ASCL1/**RP56**/RC8
17	AVDD	39	VSS
18	$\overline{\text{MCLR}}$	40	VDD
19	AN12/ISRC1/**RP59**/RC11	41	PGED3/SDA2/**RP40**/RB8
20	AN14/PGA2N3/**RP60**/RC12	42	PGEC3/SCL2/**RP47**/RB15
21	AN0/PGA1P1/CMP1A/RA0	43	TDO/AN19/PGA2N2/**RP37**/RB5
22	AN1/PGA1P2/PGA2P1/CMP1B/RA1	44	PGED1/TDI/AN20/SCL1/**RP38**/RB6

Legend: **Shaded pins** are up to 5 VDC tolerant.
RPn represents remappable peripheral functions. See Table 10-1 and Table 10-2 for the complete list of remappable sources.

© 2013-2015 Microchip Technology Inc.

Pin Diagrams (Continued)

48-Pin TQFP

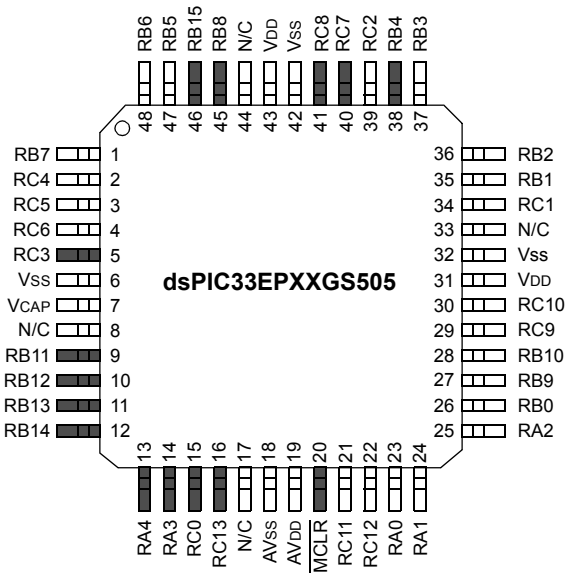

Pin	Pin Function	Pin	Pin Function
1	PGEC1/AN21/SDA1/**RP39**/RB7	25	AN2/PGA1P3/PGA2P2/CMP1C/CMP2A/RA2
2	AN1ALT/**RP52**/RC4	26	AN3/PGA2P3/CMP1D/CMP2B/**RP32**/RB0
3	AN0ALT/**RP53**/RC5	27	AN4/CMP2C/CMP3A/ISRC4/**RP41**/RB9
4	AN17/**RP54**/RC6	28	AN5/CMP2D/CMP3B/ISRC3/**RP42**/RB10
5	**RP51**/RC3	29	AN11/PGA1N3/**RP57**/RC9
6	VSS	30	AN10/PGA1P4/EXTREF2/**RP58**/RC10
7	VCAP	31	VDD
8	N/C	32	VSS
9	TMS/PWM3H/**RP43**/RB11	33	N/C
10	TCK/PWM3L/**RP44**/RB12	34	AN8/PGA2P4/CMP4C/**RP49**/RC1
11	PWM2H/**RP45**/RB13	35	OSC1/CLKI/AN6/CMP3C/CMP4A/ISRC2/**RP33**/RB1
12	PWM2L/**RP46**/RB14	36	OSC2/CLKO/AN7/PGA1N2/CMP3D/CMP4B/**RP34**/RB2
13	PWM1H/RA4	37	PGED2/AN18/DACOUT1/INT0/**RP35**/RB3
14	PWM1L/RA3	38	PGEC2/ADTRG31/**RP36**/RB4
15	FLT12/**RP48**/RC0	39	AN9/CMP4D/EXTREF1/**RP50** /RC2
16	FLT11/**RP61**/RC13	40	ASDA1/**RP55**/RC7
17	N/C	41	ASCL1/**RP56**/RC8
18	AVSS	42	VSS
19	AVDD	43	VDD
20	$\overline{\text{MCLR}}$	44	N/C
21	AN12/ISRC1/**RP59**/RC11	45	PGED3/SDA2/**RP40**/RB8
22	AN14/PGA2N3/**RP60**/RC12	46	PGEC3/SCL2/**RP47**/RB15
23	AN0/PGA1P1/CMP1A/RA0	47	TDO/AN19/PGA2N2/**RP37**/RB5
24	AN1/PGA1P2/PGA2P1/CMP1B/RA1	48	PGED1/TDI/AN20/SCL1/**RP38**/RB6

Legend: **Shaded pins** are up to 5 VDC tolerant.
RPn represents remappable peripheral functions. See Table 10-1 and Table 10-2 for the complete list of remappable sources.

Pin Diagrams (Continued)

64-Pin TQFP

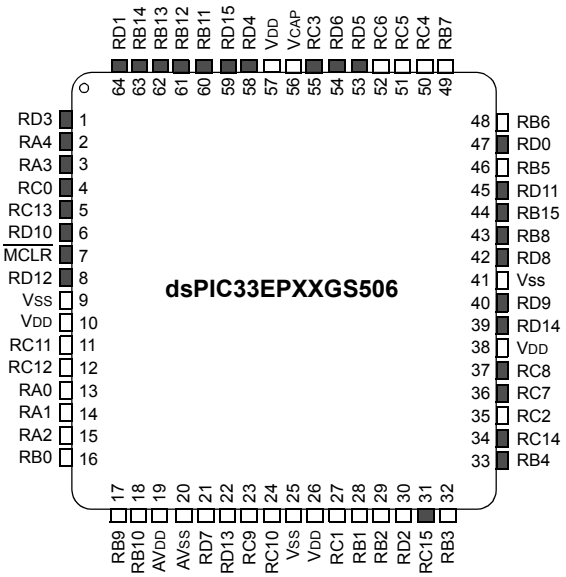

Pin	Pin Function	Pin	Pin Function
1	PWM4L/RD3	33	PGEC2/ADTRG31/**RP36**/RB4
2	PWM1H/RA4	34	**RP62**/RC14
3	PWM1L/RA3	35	AN9/CMP4D/EXTREF1/**RP50**/RC2
4	FLT12/**RP48**/RC0	36	ASDA1/**RP55**/RC7
5	FLT11/**RP61**/RC13	37	ASCL1/**RP56**/RC8
6	FLT10/RD10	38	VDD
7	$\overline{\text{MCLR}}$	39	RD14
8	FLT9/T5CK/RD12	40	RD9
9	VSS	41	VSS
10	VDD	42	RD8
11	AN12/ISRC1/**RP59**/RC11	43	PGED3/SDA2/**RP40**/RB8
12	AN14/PGA2N3/**RP60**/RC12	44	PGEC3/SCL2/**RP47**/RB15
13	AN0/PGA1P1/CMP1A/RA0	45	INT4/RD11
14	AN1/PGA1P2/PGA2P1/CMP1B/RA1	46	TDO/AN19/PGA2N2/**RP37**/RB5
15	AN2/PGA1P3/PGA2P2/CMP1C/CMP2A/RA2	47	T4CK/RD0
16	AN3/PGA2P3/CMP1D/CMP2B/**RP32**/RB0	48	PGED1/TDI/AN20/SCL1/**RP38**/RB6
17	AN4/CMP2C/CMP3A/ISRC4/**RP41**/RB9	49	PGEC1/AN21/SDA1/**RP39**/RB7
18	AN5/CMP2D/CMP3B/ISRC3/**RP42**/RB10	50	AN1ALT/**RP52**/RC4
19	AVDD	51	AN0ALT/**RP53**/RC5
20	AVSS	52	AN17/**RP54**/RC6
21	AN15/RD7	53	RD5
22	AN13/DACOUT2/RD13	54	PWM5H/RD6
23	AN11/PGA1N3/**RP57**/RC9	55	PWM5L/**RP51**/RC3
24	AN10/PGA1P4/EXTREF2/**RP58**/RC10	56	VCAP
25	VSS	57	VDD
26	VDD	58	RD4
27	AN8/PGA2P4/CMP4C/**RP49**/RC1	59	RD15
28	OSC1/CLKI/AN6/CMP3C/CMP4A/ISRC2/**RP33**/RB1	60	TMS/PWM3H/**RP43**/RB11
29	OSC2/CLKO/AN7/PGA1N2/CMP3D/CMP4B/**RP34**/RB2	61	TCK/PWM3L/**RP44**/RB12
30	AN16/RD2	62	PWM2H/**RP45**/RB13
31	ASDA2/**RP63**/RC15	63	PWM2L/**RP46**/RB14
32	PGED2/AN18/DACOUT1/ASCL2/INT0/RP35/RB3	64	PWM4H/RD1

Legend: **Shaded pins** are up to 5 VDC tolerant.
RPn represents remappable peripheral functions. See Table 10-1 and Table 10-2 for the complete list of remappable sources.

© 2013-2015 Microchip Technology Inc.

Table of Contents

1.0 Device Overview 11
2.0 Guidelines for Getting Started with 16-Bit Digital Signal Controllers 15
3.0 CPU 21
4.0 Memory Organization 31
5.0 Flash Program Memory 77
6.0 Resets 85
7.0 Interrupt Controller 89
8.0 Oscillator Configuration 103
9.0 Power-Saving Features 115
10.0 I/O Ports 125
11.0 Timer1 163
12.0 Timer2/3 and Timer4/5 167
13.0 Input Capture 171
14.0 Output Compare 175
15.0 High-Speed PWM 181
16.0 Serial Peripheral Interface (SPI) 207
17.0 Inter-Integrated Circuit™ (I^2C™) 215
18.0 Universal Asynchronous Receiver Transmitter (UART) 223
19.0 High-Speed, 12-Bit Analog-to-Digital Converter (ADC) 229
20.0 High-Speed Analog Comparator 261
21.0 Programmable Gain Amplifier (PGA) 269
22.0 Constant-Current Source 273
23.0 Special Features 275
24.0 Instruction Set Summary 287
25.0 Development Support 297
26.0 Electrical Characteristics 301
27.0 DC and AC Device Characteristics Graphs 347
28.0 Packaging Information 351
Appendix A: Revision History 375
Index 377
The Microchip Web Site 383
Customer Change Notification Service 383
Customer Support 383
Product Identification System 385

TO OUR VALUED CUSTOMERS

It is our intention to provide our valued customers with the best documentation possible to ensure successful use of your Microchip products. To this end, we will continue to improve our publications to better suit your needs. Our publications will be refined and enhanced as new volumes and updates are introduced.

If you have any questions or comments regarding this publication, please contact the Marketing Communications Department via E-mail at **docerrors@microchip.com**. We welcome your feedback.

Most Current Data Sheet

To obtain the most up-to-date version of this data sheet, please register at our Worldwide Web site at:

http://www.microchip.com

You can determine the version of a data sheet by examining its literature number found on the bottom outside corner of any page. The last character of the literature number is the version number, (e.g., DS30000000A is version A of document DS30000000).

Errata

An errata sheet, describing minor operational differences from the data sheet and recommended workarounds, may exist for current devices. As device/documentation issues become known to us, we will publish an errata sheet. The errata will specify the revision of silicon and revision of document to which it applies.

To determine if an errata sheet exists for a particular device, please check with one of the following:

- Microchip's Worldwide Web site; **http://www.microchip.com**
- Your local Microchip sales office (see last page)

When contacting a sales office, please specify which device, revision of silicon and data sheet (include literature number) you are using.

Customer Notification System

Register on our web site at **www.microchip.com** to receive the most current information on all of our products.

© 2013-2015 Microchip Technology Inc.

1.0 DEVICE OVERVIEW

Note 1: This data sheet summarizes the features of the dsPIC33EPXXGS50X family of devices. It is not intended to be a comprehensive resource. To complement the information in this data sheet, refer to the related section of the *"dsPIC33/PIC24 Family Reference Manual"*, which is available from the Microchip web site (www.microchip.com).

2: Some registers and associated bits described in this section may not be available on all devices. Refer to **Section 4.0 "Memory Organization"** in this data sheet for device-specific register and bit information.

This document contains device-specific information for the dsPIC33EPXXGS50X Digital Signal Controller (DSC) devices.

dsPIC33EPXXGS50X devices contain extensive Digital Signal Processor (DSP) functionality with a high-performance, 16-bit MCU architecture.

Figure 1-1 shows a general block diagram of the core and peripheral modules. Table 1-1 lists the functions of the various pins shown in the pinout diagrams.

FIGURE 1-1: dsPIC33EPXXGS50X FAMILY BLOCK DIAGRAM

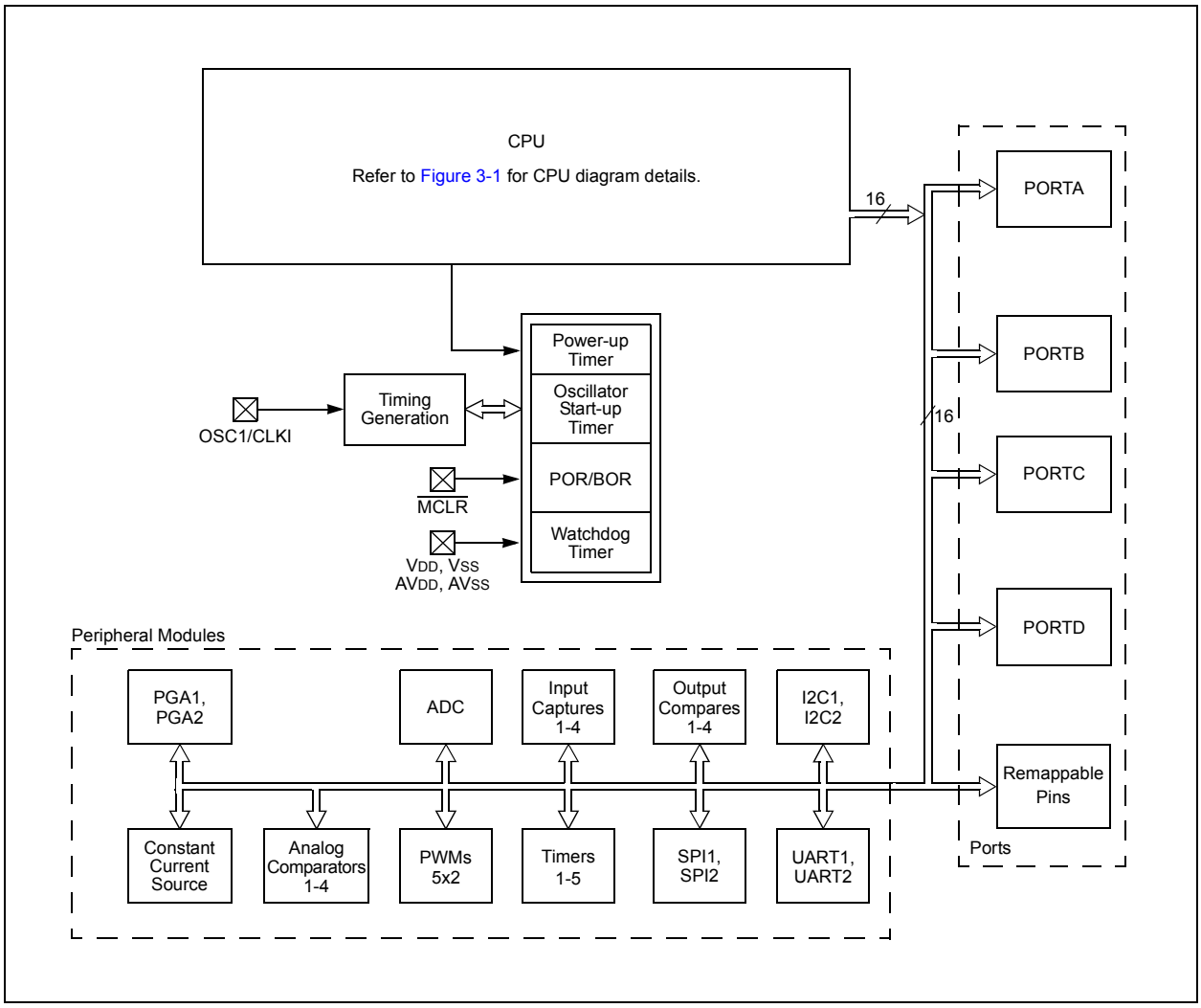

TABLE 1-1: PINOUT I/O DESCRIPTIONS

Pin Name(1)	Pin Type	Buffer Type	PPS	Description
AN0-AN21	I	Analog	No	Analog input channels.
AN0ALT-AN1ALT	I	Analog	No	Alternate analog input channels.
CLKI	I	ST/ CMOS	No	External clock source input. Always associated with OSC1 pin function.
CLKO	O	—	No	Oscillator crystal output. Connects to crystal or resonator in Crystal Oscillator mode. Optionally functions as CLKO in RC and EC modes. Always associated with OSC2 pin function.
OSC1	I	ST/ CMOS	No	Oscillator crystal input. ST buffer when configured in RC mode; CMOS otherwise.
OSC2	I/O	—	No	Oscillator crystal output. Connects to crystal or resonator in Crystal Oscillator mode. Optionally functions as CLKO in RC and EC modes.
REFCLKO	O	—	Yes	Reference clock output.
IC1-IC4	I	ST	Yes	Capture Inputs 1 through 4.
OCFA	I	ST	Yes	Compare Fault A input (for compare channels).
OC1-OC4	O	—	Yes	Compare Outputs 1 through 4.
INT0	I	ST	No	External Interrupt 0.
INT1	I	ST	Yes	External Interrupt 1.
INT2	I	ST	Yes	External Interrupt 2.
INT4	I	ST	No	External Interrupt 4.
RA0-RA4	I/O	ST	No	PORTA is a bidirectional I/O port.
RB0-RB15	I/O	ST	No	PORTB is a bidirectional I/O port.
RC0-RC15	I/O	ST	No	PORTC is a bidirectional I/O port.
RD0-RD15	I/O	ST	No	PORTD is a bidirectional I/O port.
T1CK	I	ST	Yes	Timer1 external clock input.
T2CK	I	ST	Yes	Timer2 external clock input.
T3CK	I	ST	Yes	Timer3 external clock input.
T4CK	I	ST	No	Timer4 external clock input.
T5CK	I	ST	No	Timer5 external clock input.
$\overline{\text{U1CTS}}$	I	ST	Yes	UART1 Clear-to-Send.
$\overline{\text{U1RTS}}$	O	—	Yes	UART1 Request-to-Send.
U1RX	I	ST	Yes	UART1 receive.
U1TX	O	—	Yes	UART1 transmit.
BCLK1	O	ST	Yes	UART1 IrDA® baud clock output.
$\overline{\text{U2CTS}}$	I	ST	Yes	UART2 Clear-to-Send.
$\overline{\text{U2RTS}}$	O	—	Yes	UART2 Request-to-Send.
U2RX	I	ST	Yes	UART2 receive.
U2TX	O	—	Yes	UART2 transmit.
BCLK2	O	ST	Yes	UART2 IrDA baud clock output.
SCK1	I/O	ST	Yes	Synchronous serial clock input/output for SPI1.
SDI1	I	ST	Yes	SPI1 data in.
SDO1	O	—	Yes	SPI1 data out.
$\overline{\text{SS1}}$	I/O	ST	Yes	SPI1 slave synchronization or frame pulse I/O.
SCK2	I/O	ST	Yes	Synchronous serial clock input/output for SPI2.
SDI2	I	ST	Yes	SPI2 data in.
SDO2	O	—	Yes	SPI2 data out.
$\overline{\text{SS2}}$	I/O	ST	Yes	SPI2 slave synchronization or frame pulse I/O.

Legend: CMOS = CMOS compatible input or output; Analog = Analog input; P = Power; ST = Schmitt Trigger input with CMOS levels; O = Output; I = Input; PPS = Peripheral Pin Select; TTL = TTL input buffer

1: Not all pins are available in all packages variants. See the **"Pin Diagrams"** section for pin availability.

2: These pins are remappable as well as dedicated on 64-pin devices.

© 2013-2015 Microchip Technology Inc.

TABLE 1-1: PINOUT I/O DESCRIPTIONS (CONTINUED)

Pin Name[1]	Pin Type	Buffer Type	PPS	Description
SCL1	I/O	ST	No	Synchronous serial clock input/output for I2C1.
SDA1	I/O	ST	No	Synchronous serial data input/output for I2C1.
ASCL1	I/O	ST	No	Alternate synchronous serial clock input/output for I2C1.
ASDA1	I/O	ST	No	Alternate synchronous serial data input/output for I2C1.
SCL2	I/O	ST	No	Synchronous serial clock input/output for I2C2.
SDA2	I/O	ST	No	Synchronous serial data input/output for I2C2.
ASCL2	I/O	ST	No	Alternate synchronous serial clock input/output for I2C2.
ASDA2	I/O	ST	No	Alternate synchronous serial data input/output for I2C2.
TMS	I	ST	No	JTAG Test mode select pin.
TCK	I	ST	No	JTAG test clock input pin.
TDI	I	ST	No	JTAG test data input pin.
TDO	O	—	No	JTAG test data output pin.
FLT1-FLT8	I	ST	Yes	PWM Fault Inputs 1 through 8.
FLT9-FLT12	I	ST	No	PWM Fault Inputs 9 through 12.
PWM1L-PWM3L	O	—	No	PWM Low Outputs 1 through 3.
PWM1H-PWM3H	O	—	No	PWM High Outputs 1 through 3.
PWM4L-PWM5L[2]	O	—	Yes	PWM Low Outputs 4 and 5.
PWM4H-PWM5H[2]	O	—	Yes	PWM High Outputs 4 and 5.
SYNCI1, SYNCI2	I	ST	Yes	PWM Synchronization Inputs 1 and 2.
SYNCO1, SYNCO2	O	—	Yes	PWM Synchronization Outputs 1 and 2.
CMP1A-CMP4A	I	Analog	No	Comparator Channels 1 through 4 A input.
CMP1B-CMP4B	I	Analog	No	Comparator Channels 1 through 4 B input.
CMP1C-CMP4C	I	Analog	No	Comparator Channels 1 through 4 C input.
CMP1D-CMP4D	I	Analog	No	Comparator Channels 1 through 4 D input.
DACOUT1, DACOUT2	O	—	No	DAC Output Voltages 1 and 2.
EXTREF1, EXTREF2	I	Analog	No	External Voltage Reference Inputs 1 and 2 for the reference DACs.
ISRC1-ISRC4	O	Analog	No	Constant-Current Outputs 1 through 4.
PGA1P1-PGA1P4	I	Analog	No	PGA1 Positive Inputs 1 through 4.
PGA1N1-PGA1N3	I	Analog	No	PGA1 Negative Inputs 1 through 3.
PGA2P1-PGA2P4	I	Analog	No	PGA2 Positive Inputs 1 through 4.
PGA2N1-PGA2N3	I	Analog	No	PGA2 Negative Inputs 1 through 3.
ADTRG31	I	ST	No	External ADC trigger source.
PGED1	I/O	ST	No	Data I/O pin for Programming/Debugging Communication Channel 1.
PGEC1	I	ST	No	Clock input pin for Programming/Debugging Communication Channel 1.
PGED2	I/O	ST	No	Data I/O pin for Programming/Debugging Communication Channel 2.
PGEC2	I	ST	No	Clock input pin for Programming/Debugging Communication Channel 2.
PGED3	I/O	ST	No	Data I/O pin for Programming/Debugging Communication Channel 3.
PGEC3	I	ST	No	Clock input pin for Programming/Debugging Communication Channel 3.

Legend: CMOS = CMOS compatible input or output; Analog = Analog input; P = Power
ST = Schmitt Trigger input with CMOS levels; O = Output; I = Input
PPS = Peripheral Pin Select; TTL = TTL input buffer

1: Not all pins are available in all packages variants. See the **"Pin Diagrams"** section for pin availability.

2: These pins are remappable as well as dedicated on 64-pin devices.

TABLE 1-1: PINOUT I/O DESCRIPTIONS (CONTINUED)

Pin Name(1)	Pin Type	Buffer Type	PPS	Description
$\overline{MCLR}$	I/P	ST	No	Master Clear (Reset) input. This pin is an active-low Reset to the device.
AVDD	P	P	No	Positive supply for analog modules. This pin must be connected at all times.
AVSS	P	P	No	Ground reference for analog modules. This pin must be connected at all times.
VDD	P	—	No	Positive supply for peripheral logic and I/O pins.
VCAP	P	—	No	CPU logic filter capacitor connection.
VSS	P	—	No	Ground reference for logic and I/O pins.

Legend: CMOS = CMOS compatible input or output; Analog = Analog input; P = Power; ST = Schmitt Trigger input with CMOS levels; O = Output; I = Input; PPS = Peripheral Pin Select; TTL = TTL input buffer

1: Not all pins are available in all packages variants. See the **"Pin Diagrams"** section for pin availability.

2: These pins are remappable as well as dedicated on 64-pin devices.

© 2013-2015 Microchip Technology Inc.

2.0 GUIDELINES FOR GETTING STARTED WITH 16-BIT DIGITAL SIGNAL CONTROLLERS

Note 1: This data sheet summarizes the features of the dsPIC33EPXXGS50X family of devices. It is not intended to be a comprehensive reference source. To complement the information in this data sheet, refer to the related section of the *"dsPIC33/PIC24 Family Reference Manual"*, which is available from the Microchip web site (www.microchip.com).

2: Some registers and associated bits described in this section may not be available on all devices. Refer to **Section 4.0 "Memory Organization"** in this data sheet for device-specific register and bit information.

2.1 Basic Connection Requirements

Getting started with the dsPIC33EPXXGS50X family requires attention to a minimal set of device pin connections before proceeding with development. The following is a list of pin names which must always be connected:

- All VDD and VSS pins
  (see **Section 2.2 "Decoupling Capacitors"**)
- All AVDD and AVSS pins
  regardless if ADC module is not used (see **Section 2.2 "Decoupling Capacitors"**)
- VCAP
  (see **Section 2.3 "CPU Logic Filter Capacitor Connection (VCAP)"**)
- $\overline{\text{MCLR}}$ pin
  (see **Section 2.4 "Master Clear (MCLR) Pin"**)
- PGECx/PGEDx pins
  used for In-Circuit Serial Programming™ (ICSP™) and debugging purposes (see **Section 2.5 "ICSP Pins"**)
- OSC1 and OSC2 pins
  when external oscillator source is used (see **Section 2.6 "External Oscillator Pins"**)

2.2 Decoupling Capacitors

The use of decoupling capacitors on every pair of power supply pins, such as VDD, VSS, AVDD and AVSS is required.

Consider the following criteria when using decoupling capacitors:

- **Value and type of capacitor:** Recommendation of 0.1 µF (100 nF), 10-20V. This capacitor should be a low-ESR and have resonance frequency in the range of 20 MHz and higher. It is recommended to use ceramic capacitors.
- **Placement on the printed circuit board:** The decoupling capacitors should be placed as close to the pins as possible. It is recommended to place the capacitors on the same side of the board as the device. If space is constricted, the capacitor can be placed on another layer on the PCB using a via; however, ensure that the trace length from the pin to the capacitor is within one-quarter inch (6 mm) in length.
- **Handling high-frequency noise:** If the board is experiencing high-frequency noise, above tens of MHz, add a second ceramic-type capacitor in parallel to the above described decoupling capacitor. The value of the second capacitor can be in the range of 0.01 µF to 0.001 µF. Place this second capacitor next to the primary decoupling capacitor. In high-speed circuit designs, consider implementing a decade pair of capacitances as close to the power and ground pins as possible. For example, 0.1 µF in parallel with 0.001 µF.
- **Maximizing performance:** On the board layout from the power supply circuit, run the power and return traces to the decoupling capacitors first, and then to the device pins. This ensures that the decoupling capacitors are first in the power chain. Equally important is to keep the trace length between the capacitor and the power pins to a minimum, thereby reducing PCB track inductance.

FIGURE 2-1: RECOMMENDED MINIMUM CONNECTION

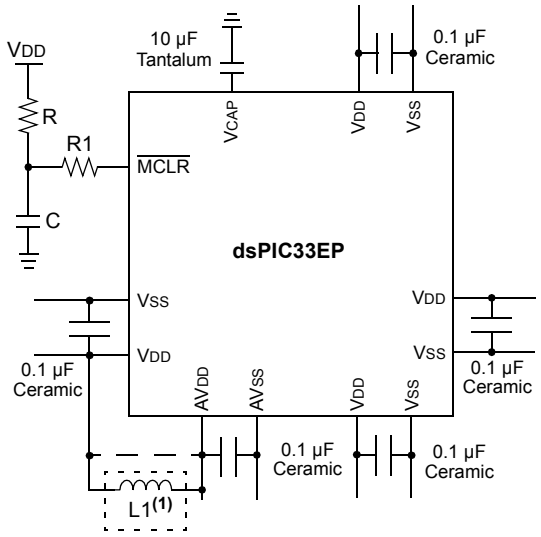

Note 1: As an option, instead of a hard-wired connection, an inductor (L1) can be substituted between VDD and AVDD to improve ADC noise rejection. The inductor impedance should be less than 1Ω and the inductor capacity greater than 10 mA.

Where:

$$f = \frac{F_{CNV}}{2} \quad \text{(i.e., ADC Conversion Rate/2)}$$

$$f = \frac{1}{(2\pi\sqrt{LC})}$$

$$L = \left(\frac{1}{(2\pi f\sqrt{C})}\right)^2$$

2.2.1 TANK CAPACITORS

On boards with power traces running longer than six inches in length, it is suggested to use a tank capacitor for integrated circuits including DSCs to supply a local power source. The value of the tank capacitor should be determined based on the trace resistance that connects the power supply source to the device and the maximum current drawn by the device in the application. In other words, select the tank capacitor so that it meets the acceptable voltage sag at the device. Typical values range from 4.7 µF to 47 µF.

2.3 CPU Logic Filter Capacitor Connection (VCAP)

A low-ESR (<0.5 Ω) capacitor is required on the VCAP pin, which is used to stabilize the voltage regulator output voltage. The VCAP pin must not be connected to VDD and must have a capacitor greater than 4.7 µF (10 µF is recommended), 16V connected to ground. The type can be ceramic or tantalum. See **Section 26.0 "Electrical Characteristics"** for additional information.

The placement of this capacitor should be close to the VCAP pin. It is recommended that the trace length not exceeds one-quarter inch (6 mm). See **Section 23.4 "On-Chip Voltage Regulator"** for details.

2.4 Master Clear ($\overline{\text{MCLR}}$) Pin

The $\overline{\text{MCLR}}$ pin provides two specific device functions:

- Device Reset
- Device Programming and Debugging.

During device programming and debugging, the resistance and capacitance that can be added to the pin must be considered. Device programmers and debuggers drive the $\overline{\text{MCLR}}$ pin. Consequently, specific voltage levels (VIH and VIL) and fast signal transitions must not be adversely affected. Therefore, specific values of R and C will need to be adjusted based on the application and PCB requirements.

For example, as shown in Figure 2-2, it is recommended that the capacitor C, be isolated from the $\overline{\text{MCLR}}$ pin during programming and debugging operations.

Place the components as shown in Figure 2-2 within one-quarter inch (6 mm) from the $\overline{\text{MCLR}}$ pin.

FIGURE 2-2: EXAMPLE OF $\overline{\text{MCLR}}$ PIN CONNECTIONS

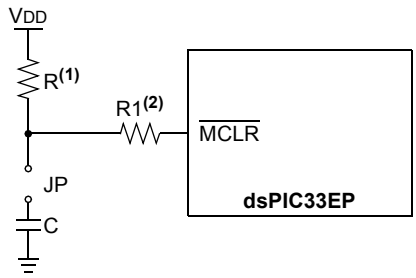

Note 1: R ≤ 10 kΩ is recommended. A suggested starting value is 10 kΩ. Ensure that the $\overline{\text{MCLR}}$ pin VIH and VIL specifications are met.

2: R1 ≤ 470Ω will limit any current flowing into $\overline{\text{MCLR}}$ from the external capacitor, C, in the event of $\overline{\text{MCLR}}$ pin breakdown due to Electrostatic Discharge (ESD) or Electrical Overstress (EOS). Ensure that the $\overline{\text{MCLR}}$ pin VIH and VIL specifications are met.

© 2013-2015 Microchip Technology Inc.

2.5 ICSP Pins

The PGECx and PGEDx pins are used for ICSP and debugging purposes. It is recommended to keep the trace length between the ICSP connector and the ICSP pins on the device as short as possible. If the ICSP connector is expected to experience an ESD event, a series resistor is recommended, with the value in the range of a few tens of Ohms, not to exceed 100 Ohms.

Pull-up resistors, series diodes and capacitors on the PGECx and PGEDx pins are not recommended as they will interfere with the programmer/debugger communications to the device. If such discrete components are an application requirement, they should be removed from the circuit during programming and debugging. Alternatively, refer to the AC/DC characteristics and timing requirements information in the respective device Flash programming specification for information on capacitive loading limits and pin Voltage Input High (V_{IH}) and Voltage Input Low (V_{IL}) requirements.

Ensure that the "Communication Channel Select" (i.e., PGECx/PGEDx pins) programmed into the device matches the physical connections for the ICSP to MPLAB® PICkit™ 3, MPLAB ICD 3, or MPLAB REAL ICE™.

For more information on MPLAB ICD 2, MPLAB ICD 3 and REAL ICE connection requirements, refer to the following documents that are available on the Microchip web site.

- *"Using MPLAB® ICD 3"* (poster) DS51765
- *"Multi-Tool Design Advisory"* DS51764
- *"MPLAB® REAL ICE™ In-Circuit Emulator User's Guide"* DS51616
- *"Using MPLAB® REAL ICE™ In-Circuit Emulator"* (poster) DS51749

2.6 External Oscillator Pins

Many DSCs have options for at least two oscillators: a high-frequency primary oscillator and a low-frequency secondary oscillator. For details, see **Section 8.0 "Oscillator Configuration"** for details.

The oscillator circuit should be placed on the same side of the board as the device. Also, place the oscillator circuit close to the respective oscillator pins, not exceeding one-half inch (12 mm) distance between them. The load capacitors should be placed next to the oscillator itself, on the same side of the board. Use a grounded copper pour around the oscillator circuit to isolate them from surrounding circuits. The grounded copper pour should be routed directly to the MCU ground. Do not run any signal traces or power traces inside the ground pour. Also, if using a two-sided board, avoid any traces on the other side of the board where the crystal is placed. A suggested layout is shown in Figure 2-3.

FIGURE 2-3: SUGGESTED PLACEMENT OF THE OSCILLATOR CIRCUIT

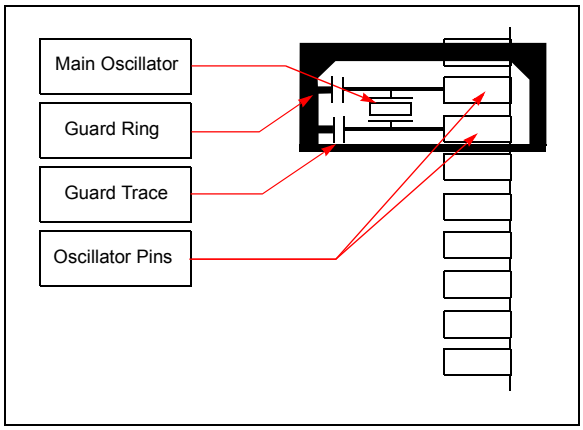

2.7 Oscillator Value Conditions on Device Start-up

If the PLL of the target device is enabled and configured for the device start-up oscillator, the maximum oscillator source frequency must be limited to 3 MHz < FIN < 5.5 MHz to comply with device PLL start-up conditions. This means that if the external oscillator frequency is outside this range, the application must start-up in the FRC mode first. The default PLL settings after a POR with an oscillator frequency outside this range will violate the device operating speed.

Once the device powers up, the application firmware can initialize the PLL SFRs, CLKDIV and PLLDBF to a suitable value, and then perform a clock switch to the Oscillator + PLL clock source. Note that clock switching must be enabled in the device Configuration Word.

2.8 Unused I/Os

Unused I/O pins should be configured as outputs and driven to a logic-low state.

Alternatively, connect a 1k to 10k resistor between VSS and unused pins and drive the output to logic low.

2.9 Targeted Applications

- Power Factor Correction (PFC)
  - Interleaved PFC
  - Critical Conduction PFC
  - Bridgeless PFC
- DC/DC Converters
  - Buck, Boost, Forward, Flyback, Push-Pull
  - Half/Full-Bridge
  - Phase-Shift Full-Bridge
  - Resonant Converters
- DC/AC
  - Half/Full-Bridge Inverter
  - Resonant Inverter

Examples of typical application connections are shown in Figure 2-4 through Figure 2-6.

FIGURE 2-4: INTERLEAVED PFC

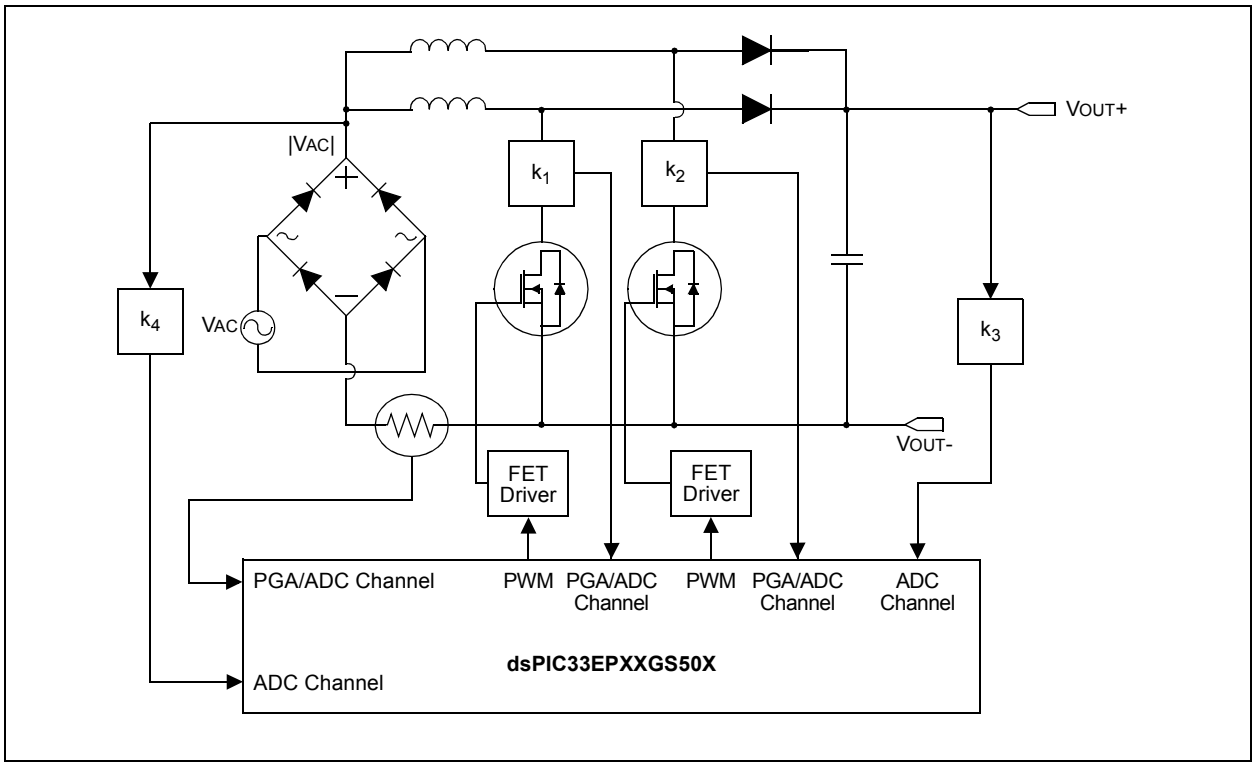

© 2013-2015 Microchip Technology Inc.

FIGURE 2-5: PHASE-SHIFTED FULL-BRIDGE CONVERTER

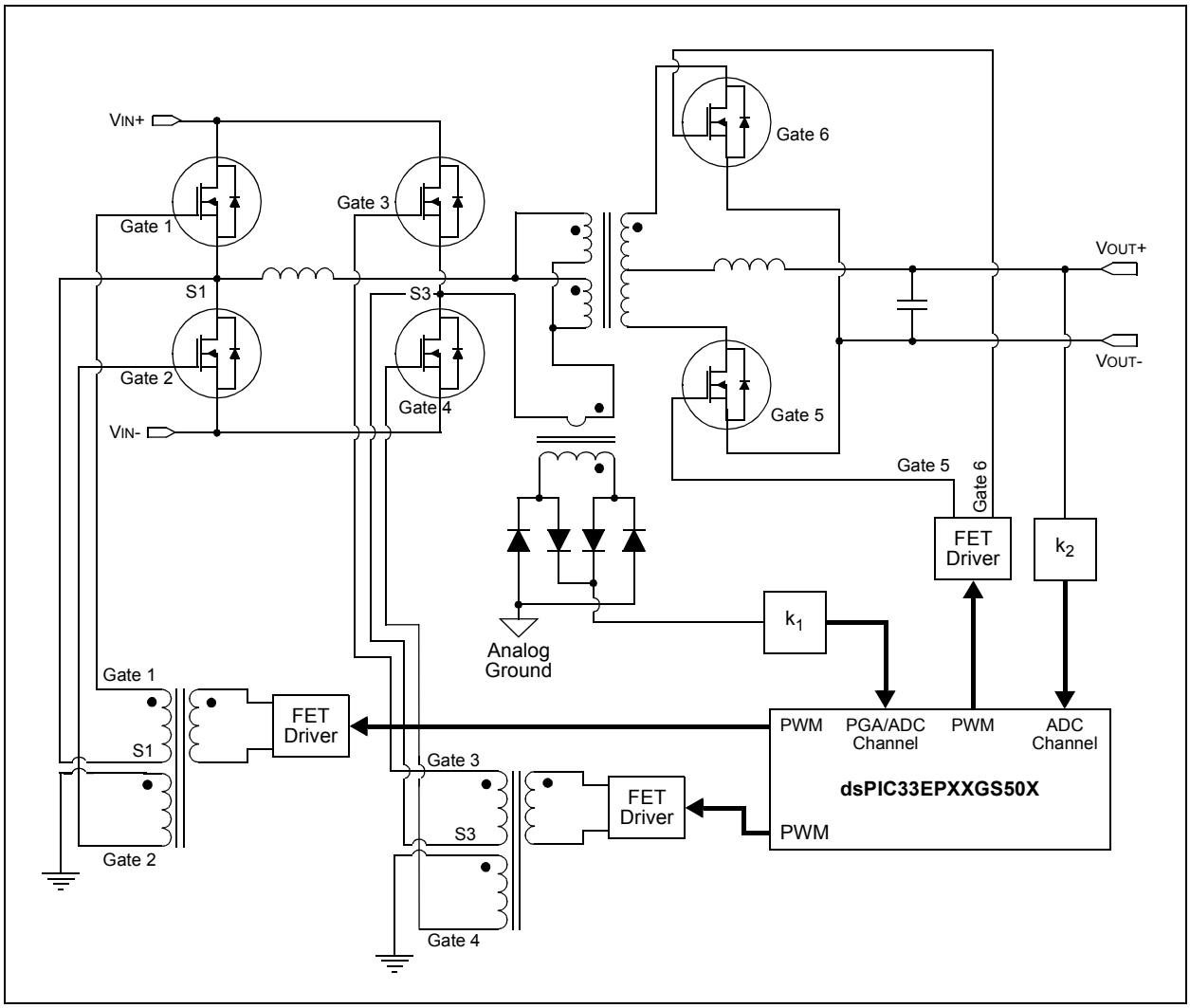

FIGURE 2-6: OFF-LINE UPS

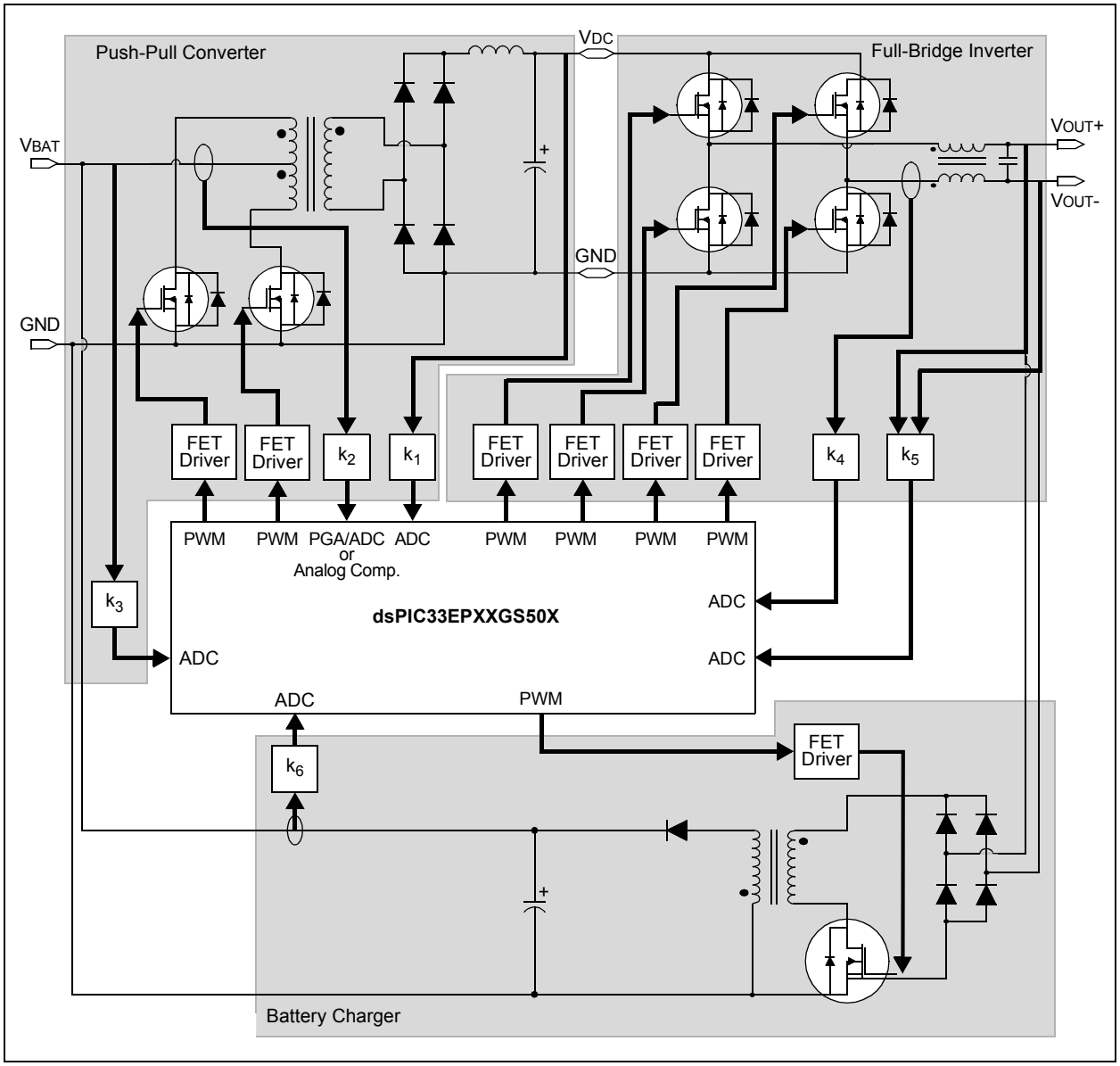

© 2013-2015 Microchip Technology Inc.

3.0 CPU

Note 1: This data sheet summarizes the features of the dsPIC33EPXXGS50X family of devices. It is not intended to be a comprehensive reference source. To complement the information in this data sheet, refer to **"CPU"** (DS70359) in the *"dsPIC33/PIC24 Family Reference Manual"*, which is available from the Microchip web site (www.microchip.com).

2: Some registers and associated bits described in this section may not be available on all devices. Refer to **Section 4.0 "Memory Organization"** in this data sheet for device-specific register and bit information.

The dsPIC33EPXXGS50X family CPU has a 16-bit (data) modified Harvard architecture with an enhanced instruction set, including significant support for Digital Signal Processing (DSP). The CPU has a 24-bit instruction word with a variable length opcode field. The Program Counter (PC) is 23 bits wide and addresses up to 4M x 24 bits of user program memory space.

An instruction prefetch mechanism helps maintain throughput and provides predictable execution. Most instructions execute in a single-cycle effective execution rate, with the exception of instructions that change the program flow, the double-word move (`MOV.D`) instruction, PSV accesses and the table instructions. Overhead-free program loop constructs are supported using the `DO` and `REPEAT` instructions, both of which are interruptible at any point.

3.1 Registers

The dsPIC33EPXXGS50X devices have sixteen, 16-bit Working registers in the programmer's model. Each of the Working registers can act as a data, address or address offset register. The 16th Working register (W15) operates as a Software Stack Pointer for interrupts and calls.

In addition, the dsPIC33EPXXGS50X devices include two Alternate Working register sets which consist of W0 through W14. The Alternate registers can be made persistent to help reduce the saving and restoring of register content during Interrupt Service Routines (ISRs). The Alternate Working registers can be assigned to a specific Interrupt Priority Level (IPL1 through IPL6) by configuring the CTXTx<2:0> bits in the FALTREG Configuration register. The Alternate Working registers can also be accessed manually by using the `CTXTSWP` instruction. The CCTXI<2:0> and MCTXI<2:0> bits in the CTXTSTAT register can be used to identify the current and most recent, manually selected Working register sets.

3.2 Instruction Set

The instruction set for dsPIC33EPXXGS50X devices has two classes of instructions: the MCU class of instructions and the DSP class of instructions. These two instruction classes are seamlessly integrated into the architecture and execute from a single execution unit. The instruction set includes many addressing modes and was designed for optimum C compiler efficiency.

3.3 Data Space Addressing

The base Data Space can be addressed as up to 4K words or 8 Kbytes, and is split into two blocks, referred to as X and Y data memory. Each memory block has its own independent Address Generation Unit (AGU). The MCU class of instructions operates solely through the X memory AGU, which accesses the entire memory map as one linear Data Space. Certain DSP instructions operate through the X and Y AGUs to support dual operand reads, which splits the data address space into two parts. The X and Y Data Space boundary is device-specific.

The upper 32 Kbytes of the Data Space memory map can optionally be mapped into Program Space (PS) at any 16K program word boundary. The program-to-Data Space mapping feature, known as Program Space Visibility (PSV), lets any instruction access Program Space as if it were Data Space. Refer to **"Data Memory"** (DS70595) in the *"dsPIC33/PIC24 Family Reference Manual"* for more details on PSV and table accesses.

On dsPIC33EPXXGS50X devices, overhead-free circular buffers (Modulo Addressing) are supported in both X and Y address spaces. The Modulo Addressing removes the software boundary checking overhead for DSP algorithms. The X AGU Circular Addressing can be used with any of the MCU class of instructions. The X AGU also supports Bit-Reversed Addressing to greatly simplify input or output data re-ordering for radix-2 FFT algorithms.

3.4 Addressing Modes

The CPU supports these addressing modes:

- Inherent (no operand)
- Relative
- Literal
- Memory Direct
- Register Direct
- Register Indirect

Each instruction is associated with a predefined addressing mode group, depending upon its functional requirements. As many as six addressing modes are supported for each instruction.

FIGURE 3-1: dsPIC33EPXXGS50X FAMILY CPU BLOCK DIAGRAM

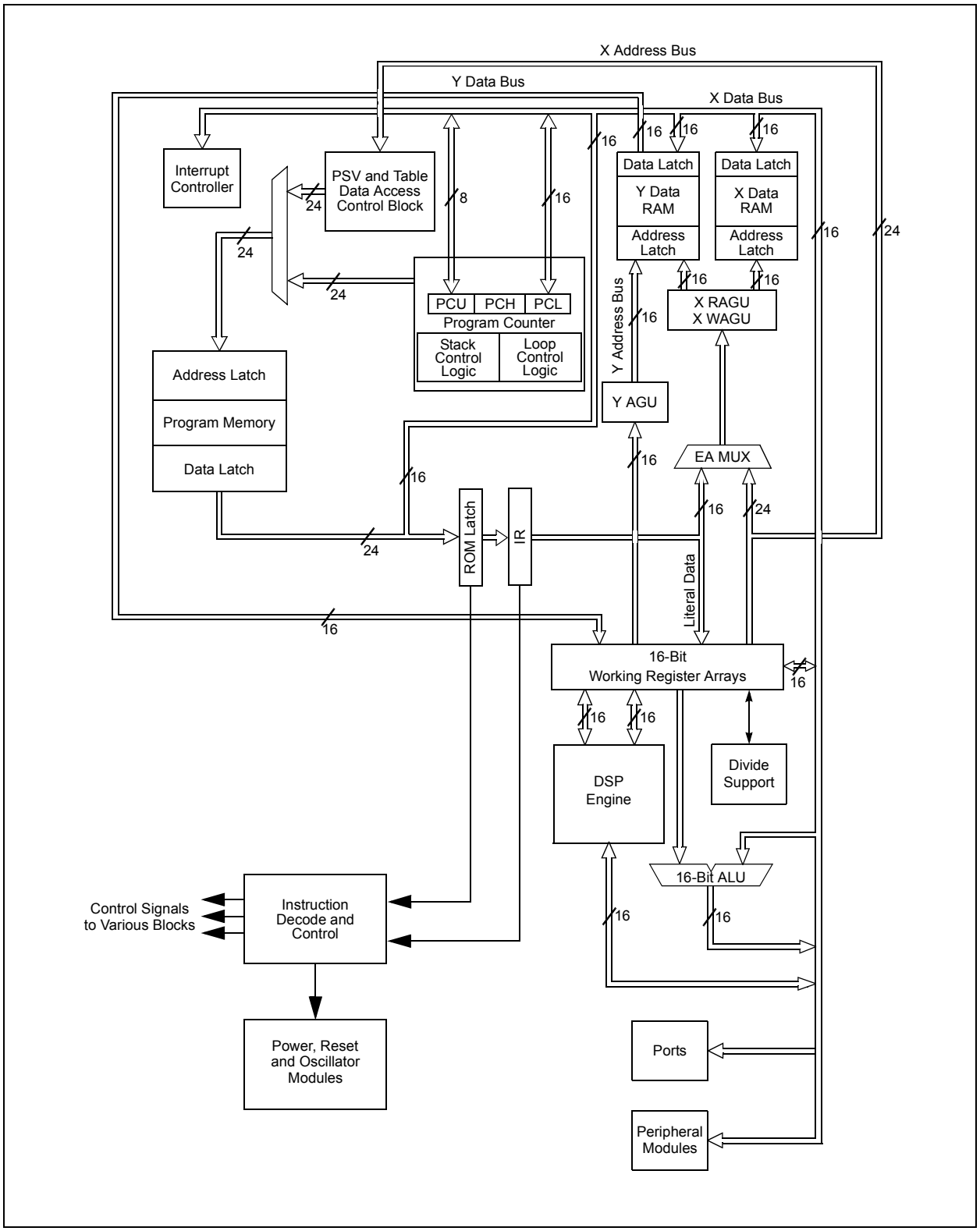

© 2013-2015 Microchip Technology Inc.

3.5 Programmer's Model

The programmer's model for the dsPIC33EPXXGS50X family is shown in Figure 3-2. All registers in the programmer's model are memory-mapped and can be manipulated directly by instructions. Table 3-1 lists a description of each register.

In addition to the registers contained in the programmer's model, the dsPIC33EPXXGS50X devices contain control registers for Modulo Addressing, Bit-Reversed Addressing and interrupts. These registers are described in subsequent sections of this document.

All registers associated with the programmer's model are memory-mapped, as shown in Table 3-1.

TABLE 3-1: PROGRAMMER'S MODEL REGISTER DESCRIPTIONS

Register(s) Name	Description
W0 through W15(1)	Working Register Array
W0 through W14(1)	Alternate 1 Working Register Array
W0 through W14(1)	Alternate 2 Working Register Array
ACCA, ACCB	40-Bit DSP Accumulators
PC	23-Bit Program Counter
SR	ALU and DSP Engine STATUS Register
SPLIM	Stack Pointer Limit Value Register
TBLPAG	Table Memory Page Address Register
DSRPAG	Extended Data Space (EDS) Read Page Register
RCOUNT	`REPEAT` Loop Counter Register
DCOUNT	`DO` Loop Counter Register
DOSTARTH(2), DOSTARTL(2)	`DO` Loop Start Address Register (High and Low)
DOENDH, DOENDL	`DO` Loop End Address Register (High and Low)
CORCON	Contains DSP Engine, `DO` Loop Control and Trap Status bits

Note 1: Memory-mapped W0 through W14 represent the value of the register in the currently active CPU context.

2: The DOSTARTH and DOSTARTL registers are read-only.

FIGURE 3-2: PROGRAMMER'S MODEL

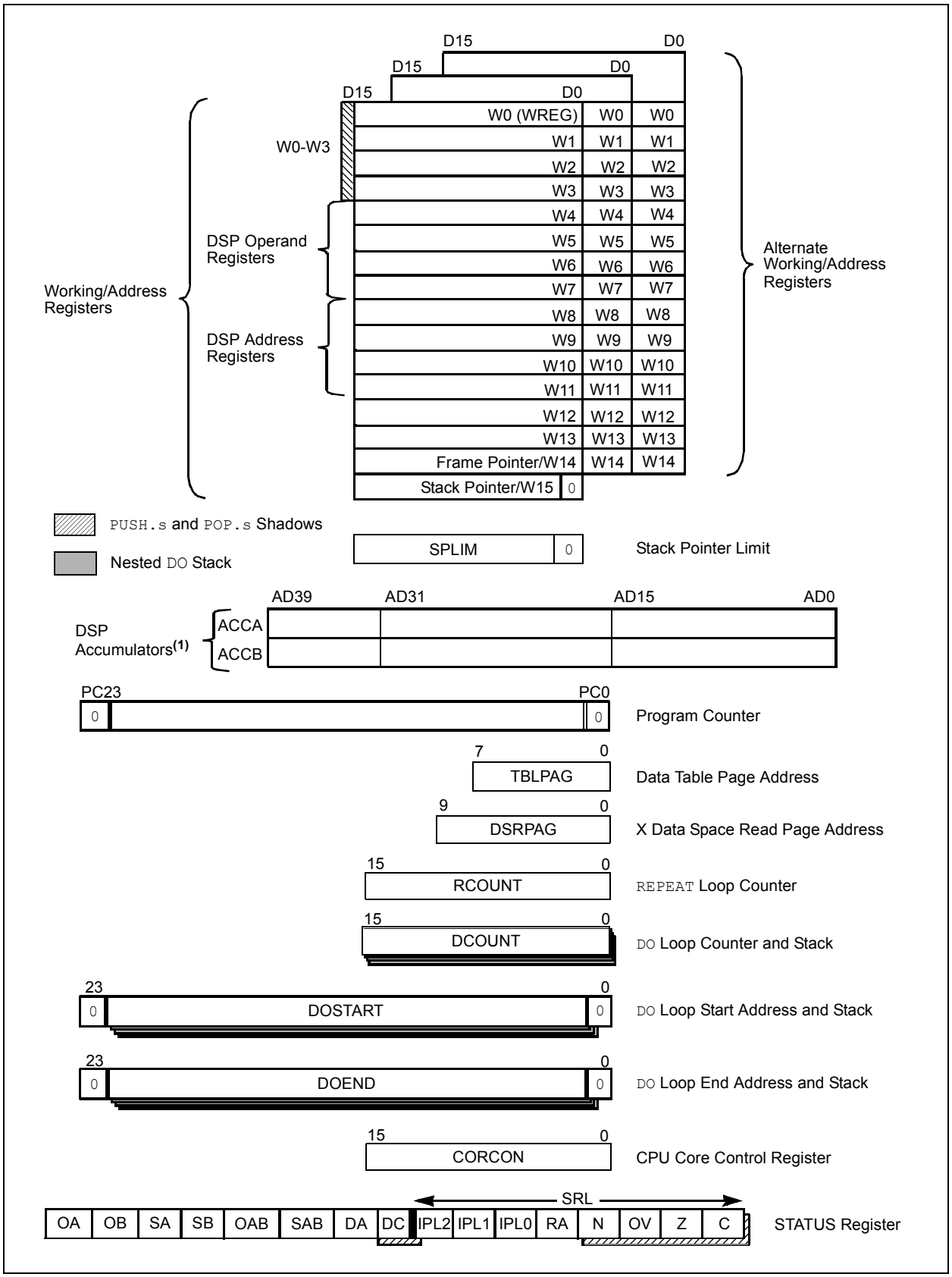

© 2013-2015 Microchip Technology Inc.

3.6 CPU Resources

Many useful resources are provided on the main product page of the Microchip web site for the devices listed in this data sheet. This product page contains the latest updates and additional information.

3.6.1 KEY RESOURCES

- Code Samples
- Application Notes
- Software Libraries
- Webinars
- All related *"dsPIC33/PIC24 Family Reference Manual"* Sections
- Development Tools

3.7 CPU Control Registers

REGISTER 3-1: SR: CPU STATUS REGISTER

R/W-0	R/W-0	R/W-0	R/W-0	R/C-0	R/C-0	R-0	R/W-0
OA	OB	SA(3)	SB(3)	OAB	SAB	DA	DC
bit 15							bit 8

R/W-0(2)	R/W-0(2)	R/W-0(2)	R-0	R/W-0	R/W-0	R/W-0	R/W-0
IPL2(1)	IPL1(1)	IPL0(1)	RA	N	OV	Z	C
bit 7							bit 0

Legend:	C = Clearable bit		
R = Readable bit	W = Writable bit	U = Unimplemented bit, read as ‘0’	
-n = Value at POR	‘1’= Bit is set	‘0’ = Bit is cleared	x = Bit is unknown

bit 15 **OA:** Accumulator A Overflow Status bit
1 = Accumulator A has overflowed
0 = Accumulator A has not overflowed

bit 14 **OB:** Accumulator B Overflow Status bit
1 = Accumulator B has overflowed
0 = Accumulator B has not overflowed

bit 13 **SA:** Accumulator A Saturation ‘Sticky’ Status bit(3)
1 = Accumulator A is saturated or has been saturated at some time
0 = Accumulator A is not saturated

bit 12 **SB:** Accumulator B Saturation ‘Sticky’ Status bit(3)
1 = Accumulator B is saturated or has been saturated at some time
0 = Accumulator B is not saturated

bit 11 **OAB:** OA || OB Combined Accumulator Overflow Status bit
1 = Accumulators A or B have overflowed
0 = Neither Accumulators A or B have overflowed

bit 10 **SAB:** SA || SB Combined Accumulator ‘Sticky’ Status bit
1 = Accumulators A or B are saturated or have been saturated at some time
0 = Neither Accumulator A or B are saturated

bit 9 **DA:** DO Loop Active bit
1 = DO loop in progress
0 = DO loop not in progress

bit 8 **DC:** MCU ALU Half Carry/$\overline{\text{Borrow}}$ bit
1 = A carry-out from the 4th low-order bit (for byte-sized data) or 8th low-order bit (for word-sized data) of the result occurred
0 = No carry-out from the 4th low-order bit (for byte-sized data) or 8th low-order bit (for word-sized data) of the result occurred

Note 1: The IPL<2:0> bits are concatenated with the IPL<3> bit (CORCON<3>) to form the CPU Interrupt Priority Level. The value in parentheses indicates the IPL, if IPL<3> = 1. User interrupts are disabled when IPL<3> = 1.

2: The IPL<2:0> Status bits are read-only when the NSTDIS bit (INTCON1<15>) = 1.

3: A data write to the SR register can modify the SA and SB bits by either a data write to SA and SB or by clearing the SAB bit. To avoid a possible SA or SB bit write race condition, the SA and SB bits should not be modified using bit operations.

© 2013-2015 Microchip Technology Inc.

REGISTER 3-1: SR: CPU STATUS REGISTER (CONTINUED)

bit 7-5 **IPL<2:0>:** CPU Interrupt Priority Level Status bits(1,2)
111 = CPU Interrupt Priority Level is 7 (15); user interrupts are disabled
110 = CPU Interrupt Priority Level is 6 (14)
101 = CPU Interrupt Priority Level is 5 (13)
100 = CPU Interrupt Priority Level is 4 (12)
011 = CPU Interrupt Priority Level is 3 (11)
010 = CPU Interrupt Priority Level is 2 (10)
001 = CPU Interrupt Priority Level is 1 (9)
000 = CPU Interrupt Priority Level is 0 (8)

bit 4 **RA:** REPEAT Loop Active bit
1 = REPEAT loop is in progress
0 = REPEAT loop is not in progress

bit 3 **N:** MCU ALU Negative bit
1 = Result was negative
0 = Result was non-negative (zero or positive)

bit 2 **OV:** MCU ALU Overflow bit
This bit is used for signed arithmetic (2's complement). It indicates an overflow of the magnitude that causes the sign bit to change state.
1 = Overflow occurred for signed arithmetic (in this arithmetic operation)
0 = No overflow occurred

bit 1 **Z:** MCU ALU Zero bit
1 = An operation that affects the Z bit has set it at some time in the past
0 = The most recent operation that affects the Z bit has cleared it (i.e., a non-zero result)

bit 0 **C:** MCU ALU Carry/$\overline{\text{Borrow}}$ bit
1 = A carry-out from the Most Significant bit of the result occurred
0 = No carry-out from the Most Significant bit of the result occurred

Note 1: The IPL<2:0> bits are concatenated with the IPL<3> bit (CORCON<3>) to form the CPU Interrupt Priority Level. The value in parentheses indicates the IPL, if IPL<3> = 1. User interrupts are disabled when IPL<3> = 1.

2: The IPL<2:0> Status bits are read-only when the NSTDIS bit (INTCON1<15>) = 1.

3: A data write to the SR register can modify the SA and SB bits by either a data write to SA and SB or by clearing the SAB bit. To avoid a possible SA or SB bit write race condition, the SA and SB bits should not be modified using bit operations.

REGISTER 3-2: CORCON: CORE CONTROL REGISTER

R/W-0	U-0	R/W-0	R/W-0	R/W-0	R-0	R-0	R-0
VAR	—	US1	US0	EDT(1)	DL2	DL1	DL0
bit 15							bit 8

R/W-0	R/W-0	R/W-1	R/W-0	R/C-0	R-0	R/W-0	R/W-0
SATA	SATB	SATDW	ACCSAT	IPL3(2)	SFA	RND	IF
bit 7							bit 0

Legend:	C = Clearable bit		
R = Readable bit	W = Writable bit	U = Unimplemented bit, read as ‘0’	
-n = Value at POR	‘1’ = Bit is set	‘0’ = Bit is cleared	x = Bit is unknown

bit 15 **VAR:** Variable Exception Processing Latency Control bit
1 = Variable exception processing is enabled
0 = Fixed exception processing is enabled

bit 14 **Unimplemented:** Read as ‘0’

bit 13-12 **US<1:0>:** DSP Multiply Unsigned/Signed Control bits
11 = Reserved
10 = DSP engine multiplies are mixed-sign
01 = DSP engine multiplies are unsigned
00 = DSP engine multiplies are signed

bit 11 **EDT:** Early DO Loop Termination Control bit(1)
1 = Terminates executing DO loop at the end of current loop iteration
0 = No effect

bit 10-8 **DL<2:0>:** DO Loop Nesting Level Status bits
111 = 7 DO loops are active
•
•
•
001 = 1 DO loop is active
000 = 0 DO loops are active

bit 7 **SATA:** ACCA Saturation Enable bit
1 = Accumulator A saturation is enabled
0 = Accumulator A saturation is disabled

bit 6 **SATB:** ACCB Saturation Enable bit
1 = Accumulator B saturation is enabled
0 = Accumulator B saturation is disabled

bit 5 **SATDW:** Data Space Write from DSP Engine Saturation Enable bit
1 = Data Space write saturation is enabled
0 = Data Space write saturation is disabled

bit 4 **ACCSAT:** Accumulator Saturation Mode Select bit
1 = 9.31 saturation (super saturation)
0 = 1.31 saturation (normal saturation)

bit 3 **IPL3:** CPU Interrupt Priority Level Status bit 3(2)
1 = CPU Interrupt Priority Level is greater than 7
0 = CPU Interrupt Priority Level is 7 or less

Note 1: This bit is always read as ‘0’.
2: The IPL3 bit is concatenated with the IPL<2:0> bits (SR<7:5>) to form the CPU Interrupt Priority Level.

© 2013-2015 Microchip Technology Inc.

REGISTER 3-2: CORCON: CORE CONTROL REGISTER (CONTINUED)

bit 2 **SFA:** Stack Frame Active Status bit
1 = Stack frame is active; W14 and W15 address 0x0000 to 0xFFFF, regardless of DSRPAG
0 = Stack frame is not active; W14 and W15 address the base Data Space

bit 1 **RND:** Rounding Mode Select bit
1 = Biased (conventional) rounding is enabled
0 = Unbiased (convergent) rounding is enabled

bit 0 **IF:** Integer or Fractional Multiplier Mode Select bit
1 = Integer mode is enabled for DSP multiply
0 = Fractional mode is enabled for DSP multiply

Note 1: This bit is always read as '0'.
2: The IPL3 bit is concatenated with the IPL<2:0> bits (SR<7:5>) to form the CPU Interrupt Priority Level.

REGISTER 3-3: CTXTSTAT: CPU W REGISTER CONTEXT STATUS REGISTER

U-0	U-0	U-0	U-0	U-0	R-0	R-0	R-0
—	—	—	—	—	CCTXI2	CCTXI1	CCTXI0
bit 15							bit 8

U-0	U-0	U-0	U-0	U-0	R-0	R-0	R-0
—	—	—	—	—	MCTXI2	MCTXI1	MCTXI0
bit 7							bit 0

Legend:			
R = Readable bit	W = Writable bit	U = Unimplemented bit, read as '0'	
-n = Value at POR	'1' = Bit is set	'0' = Bit is cleared	x = Bit is unknown

bit 15-11 **Unimplemented:** Read as '0'

bit 10-8 **CCTXI<2:0>:** Current (W Register) Context Identifier bits
111 = Reserved
•
•
•
011 = Reserved
010 = Alternate Working Register Set 2 is currently in use
001 = Alternate Working Register Set 1 is currently in use
000 = Default register set is currently in use

bit 7-3 **Unimplemented:** Read as '0'

bit 2-0 **MCTXI<2:0>:** Manual (W Register) Context Identifier bits
111 = Reserved
•
•
•
011 = Reserved
010 = Alternate Working Register Set 2 was most recently manually selected
001 = Alternate Working Register Set 1 was most recently manually selected
000 = Default register set was most recently manually selected

3.8 Arithmetic Logic Unit (ALU)

The dsPIC33EPXXGS50X family ALU is 16 bits wide and is capable of addition, subtraction, bit shifts and logic operations. Unless otherwise mentioned, arithmetic operations are two's complement in nature. Depending on the operation, the ALU can affect the values of the Carry (C), Zero (Z), Negative (N), Overflow (OV) and Digit Carry (DC) Status bits in the SR register. The C and DC Status bits operate as Borrow and Digit Borrow bits, respectively, for subtraction operations.

The ALU can perform 8-bit or 16-bit operations, depending on the mode of the instruction that is used. Data for the ALU operation can come from the W register array or data memory, depending on the addressing mode of the instruction. Likewise, output data from the ALU can be written to the W register array or a data memory location.

Refer to the *"16-bit MCU and DSC Programmer's Reference Manual"* (DS70157) for information on the SR bits affected by each instruction.

The core CPU incorporates hardware support for both multiplication and division. This includes a dedicated hardware multiplier and support hardware for 16-bit divisor division.

3.8.1 MULTIPLIER

Using the high-speed 17-bit x 17-bit multiplier, the ALU supports unsigned, signed, or mixed-sign operation in several MCU multiplication modes:

- 16-bit x 16-bit signed
- 16-bit x 16-bit unsigned
- 16-bit signed x 5-bit (literal) unsigned
- 16-bit signed x 16-bit unsigned
- 16-bit unsigned x 5-bit (literal) unsigned
- 16-bit unsigned x 16-bit signed
- 8-bit unsigned x 8-bit unsigned

3.8.2 DIVIDER

The divide block supports 32-bit/16-bit and 16-bit/16-bit signed and unsigned integer divide operations with the following data sizes:

- 32-bit signed/16-bit signed divide
- 32-bit unsigned/16-bit unsigned divide
- 16-bit signed/16-bit signed divide
- 16-bit unsigned/16-bit unsigned divide

The quotient for all divide instructions ends up in W0 and the remainder in W1. 16-bit signed and unsigned `DIV` instructions can specify any W register for both the 16-bit divisor (Wn) and any W register (aligned) pair (W(m + 1):Wm) for the 32-bit dividend. The divide algorithm takes one cycle per bit of divisor, so both 32-bit/16-bit and 16-bit/16-bit instructions take the same number of cycles to execute.

3.9 DSP Engine

The DSP engine consists of a high-speed 17-bit x 17-bit multiplier, a 40-bit barrel shifter and a 40-bit adder/subtracter (with two target accumulators, round and saturation logic).

The DSP engine can also perform inherent accumulator-to-accumulator operations that require no additional data. These instructions are, `ADD`, `SUB` and `NEG`.

The DSP engine has options selected through bits in the CPU Core Control register (CORCON), as listed below:

- Fractional or integer DSP multiply (IF)
- Signed, unsigned or mixed-sign DSP multiply (USx)
- Conventional or convergent rounding (RND)
- Automatic saturation on/off for ACCA (SATA)
- Automatic saturation on/off for ACCB (SATB)
- Automatic saturation on/off for writes to data memory (SATDW)
- Accumulator Saturation mode selection (ACCSAT)

TABLE 3-2: DSP INSTRUCTIONS SUMMARY

Instruction	Algebraic Operation	ACC Write-Back
`CLR`	$A = 0$	Yes
`ED`	$A = (x - y)^2$	No
`EDAC`	$A = A + (x - y)^2$	No
`MAC`	$A = A + (x \bullet y)$	Yes
`MAC`	$A = A + x^2$	No
`MOVSAC`	No change in A	Yes
`MPY`	$A = x \bullet y$	No
`MPY`	$A = x^2$	No
`MPY.N`	$A = -x \bullet y$	No
`MSC`	$A = A - x \bullet y$	Yes

© 2013-2015 Microchip Technology Inc.

4.0 MEMORY ORGANIZATION

Note: This data sheet summarizes the features of the dsPIC33EPXXGS50X family of devices. It is not intended to be a comprehensive reference source. To complement the information in this data sheet, refer to **"dsPIC33E/PIC24E Program Memory"** (DS70000613) in the *"dsPIC33/PIC24 Family Reference Manual"*, which is available from the Microchip web site (www.microchip.com).

The dsPIC33EPXXGS50X family architecture features separate program and data memory spaces, and buses. This architecture also allows the direct access of program memory from the Data Space (DS) during code execution.

4.1 Program Address Space

The program address memory space of the dsPIC33EPXXGS50X family devices is 4M instructions. The space is addressable by a 24-bit value derived either from the 23-bit PC during program execution, or from table operation or Data Space remapping, as described in **Section 4.8 "Interfacing Program and Data Memory Spaces"**.

User application access to the program memory space is restricted to the lower half of the address range (0x000000 to 0x7FFFFF). The exception is the use of `TBLRD` operations, which use TBLPAG<7> to permit access to calibration data and Device ID sections of the configuration memory space.

The program memory maps for the dsPIC33EP16/32GS50X and dsPIC33EP64GS50X devices not operating in Dual Partition mode, are shown in Figure 4-1 through Figure 4-3.

The dsPIC33EP64GS50X devices can operate in a Dual Partition Flash Program Memory mode, where the user program Flash memory is arranged as two separate address spaces, one for each of the Flash partitions. The Active Partition always starts at address, 0x000000, and contains half of the available Flash memory (32K). The Inactive Partition always starts at address, 0x400000, and implements the remaining half of Flash memory. As shown in Figure 4-4, the Active and Inactive Partitions are identical and both contain unique copies of the Reset vector, Interrupt Vector Tables (IVT and AIVT if enabled) and the Flash Configuration Words.

FIGURE 4-1: PROGRAM MEMORY MAP FOR dsPIC33EP16GS50X DEVICES

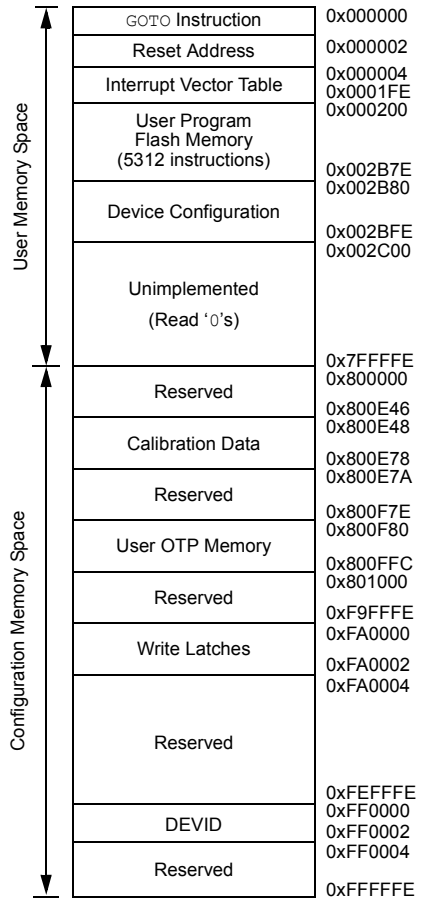

Note: Memory areas are not shown to scale.

© 2013-2015 Microchip Technology Inc.

FIGURE 4-2: PROGRAM MEMORY MAP FOR dsPIC33EP32GS50X DEVICES

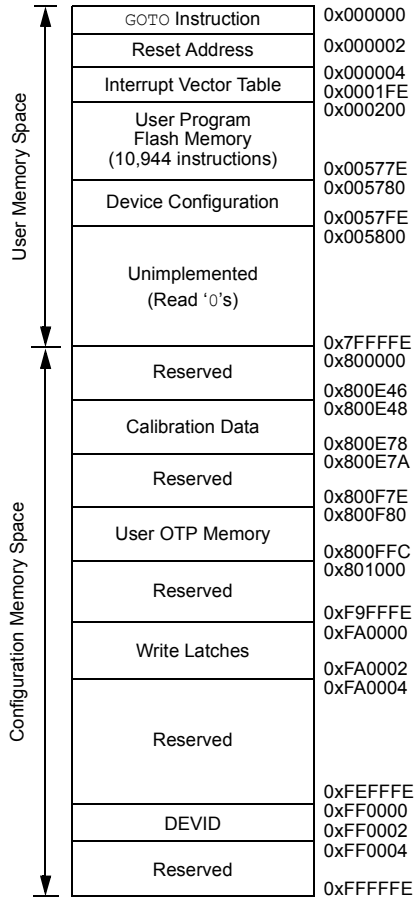

Note: Memory areas are not shown to scale.

FIGURE 4-3: PROGRAM MEMORY MAP FOR dsPIC33EP64GS50X DEVICES

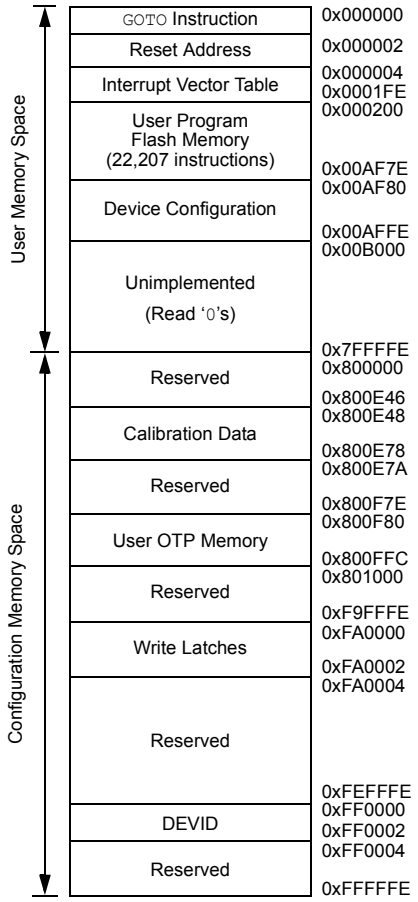

Note: Memory areas are not shown to scale.

© 2013-2015 Microchip Technology Inc.

FIGURE 4-4: PROGRAM MEMORY MAP FOR dsPIC33EP64GS50X DEVICES (DUAL PARTITION)

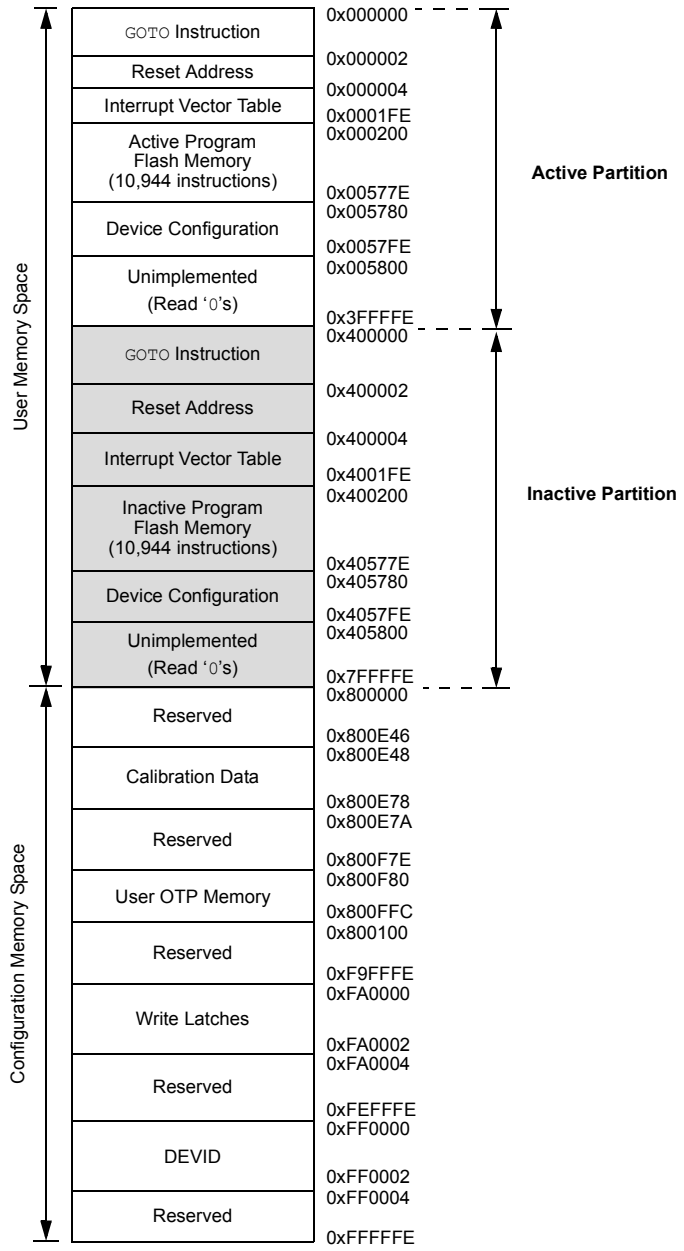

Note: Memory areas are not shown to scale.

4.1.1 PROGRAM MEMORY ORGANIZATION

The program memory space is organized in word-addressable blocks. Although it is treated as 24 bits wide, it is more appropriate to think of each address of the program memory as a lower and upper word, with the upper byte of the upper word being unimplemented. The lower word always has an even address, while the upper word has an odd address (Figure 4-5).

Program memory addresses are always word-aligned on the lower word, and addresses are incremented, or decremented, by two, during code execution. This arrangement provides compatibility with data memory space addressing and makes data in the program memory space accessible.

4.1.2 INTERRUPT AND TRAP VECTORS

All dsPIC33EPXXGS50X family devices reserve the addresses between 0x000000 and 0x000200 for hard-coded program execution vectors. A hardware Reset vector is provided to redirect code execution from the default value of the PC on device Reset to the actual start of code. A `GOTO` instruction is programmed by the user application at address, 0x000000, of Flash memory, with the actual address for the start of code at address, 0x000002, of Flash memory.

A more detailed discussion of the Interrupt Vector Tables (IVTs) is provided in **Section 7.1 "Interrupt Vector Table"**.

FIGURE 4-5: PROGRAM MEMORY ORGANIZATION

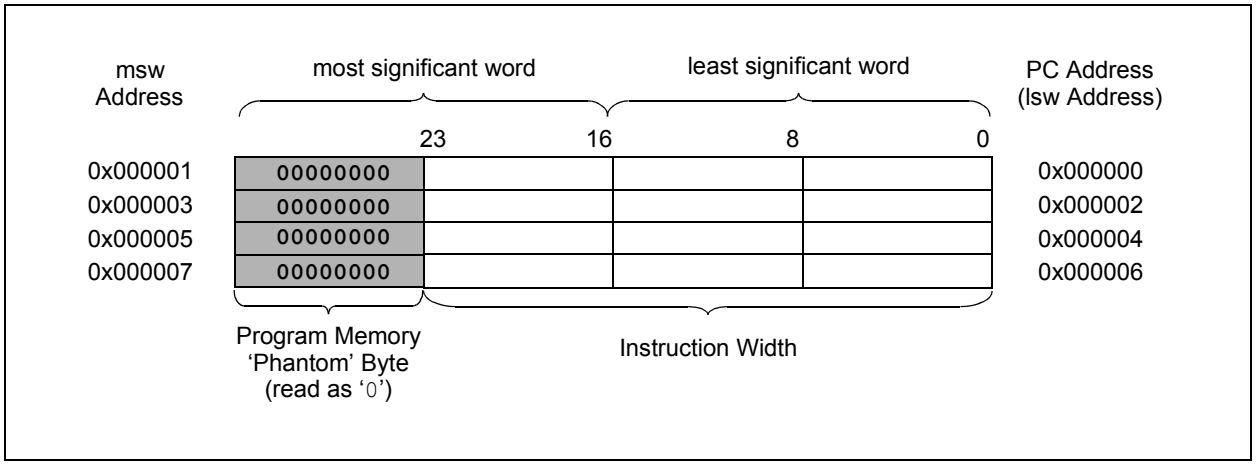

© 2013-2015 Microchip Technology Inc.

4.2 Data Address Space

The dsPIC33EPXXGS50X family CPU has a separate 16-bit wide data memory space. The Data Space is accessed using separate Address Generation Units (AGUs) for read and write operations. The data memory maps are shown in Figure 4-6 through Figure 4-8.

All Effective Addresses (EAs) in the data memory space are 16 bits wide and point to bytes within the Data Space. This arrangement gives a base Data Space address range of 64 Kbytes or 32K words.

The lower half of the data memory space (i.e., when EA<15> = `0`) is used for implemented memory addresses, while the upper half (EA<15> = `1`) is reserved for the Program Space Visibility (PSV).

dsPIC33EPXXGS50X family devices implement up to 12 Kbytes of data memory. If an EA points to a location outside of this area, an all-zero word or byte is returned.

4.2.1 DATA SPACE WIDTH

The data memory space is organized in byte-addressable, 16-bit wide blocks. Data is aligned in data memory and registers as 16-bit words, but all Data Space EAs resolve to bytes. The Least Significant Bytes (LSBs) of each word have even addresses, while the Most Significant Bytes (MSBs) have odd addresses.

4.2.2 DATA MEMORY ORGANIZATION AND ALIGNMENT

To maintain backward compatibility with PIC® MCU devices and improve Data Space memory usage efficiency, the dsPIC33EPXXGS50X family instruction set supports both word and byte operations. As a consequence of byte accessibility, all Effective Address calculations are internally scaled to step through word-aligned memory. For example, the core recognizes that Post-Modified Register Indirect Addressing mode [Ws++] results in a value of Ws + 1 for byte operations and Ws + 2 for word operations.

A data byte read, reads the complete word that contains the byte, using the LSb of any EA to determine which byte to select. The selected byte is placed onto the LSB of the data path. That is, data memory and registers are organized as two parallel, byte-wide entities with shared (word) address decode, but separate write lines. Data byte writes only write to the corresponding side of the array or register that matches the byte address.

All word accesses must be aligned to an even address. Misaligned word data fetches are not supported, so care must be taken when mixing byte and word operations, or translating from 8-bit MCU code. If a misaligned read or write is attempted, an address error trap is generated. If the error occurred on a read, the instruction underway is completed. If the error occurred on a write, the instruction is executed but the write does not occur. In either case, a trap is then executed, allowing the system and/or user application to examine the machine state prior to execution of the address Fault.

All byte loads into any W register are loaded into the LSB; the MSB is not modified.

A Sign-Extend (`SE`) instruction is provided to allow user applications to translate 8-bit signed data to 16-bit signed values. Alternatively, for 16-bit unsigned data, user applications can clear the MSB of any W register by executing a Zero-Extend (`ZE`) instruction on the appropriate address.

4.2.3 SFR SPACE

The first 4 Kbytes of the Near Data Space, from 0x0000 to 0x0FFF, is primarily occupied by Special Function Registers (SFRs). These are used by the dsPIC33EPXXGS50X family core and peripheral modules for controlling the operation of the device.

SFRs are distributed among the modules that they control, and are generally grouped together by module. Much of the SFR space contains unused addresses; these are read as '`0`'.

Note:	The actual set of peripheral features and interrupts varies by the device. Refer to the corresponding device tables and pinout diagrams for device-specific information.

4.2.4 NEAR DATA SPACE

The 8-Kbyte area, between 0x0000 and 0x1FFF, is referred to as the Near Data Space. Locations in this space are directly addressable through a 13-bit absolute address field within all memory direct instructions. Additionally, the whole Data Space is addressable using `MOV` instructions, which support Memory Direct Addressing mode with a 16-bit address field, or by using Indirect Addressing mode using a Working register as an Address Pointer.

FIGURE 4-6: DATA MEMORY MAP FOR dsPIC33EP16GS50X DEVICES

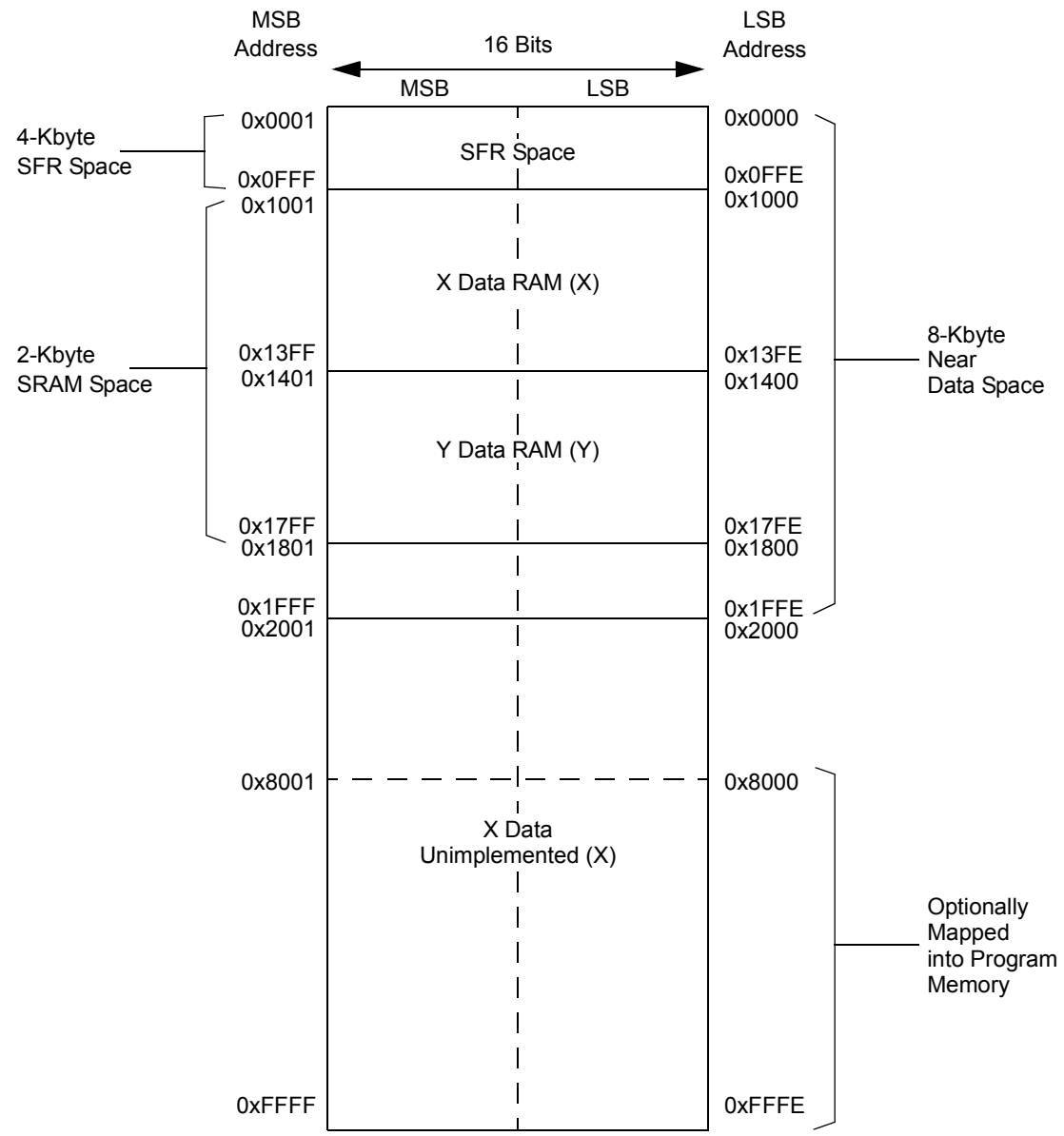

Note: Memory areas are not shown to scale.

© 2013-2015 Microchip Technology Inc.

FIGURE 4-7: DATA MEMORY MAP FOR dsPIC33EP32GS50X DEVICES

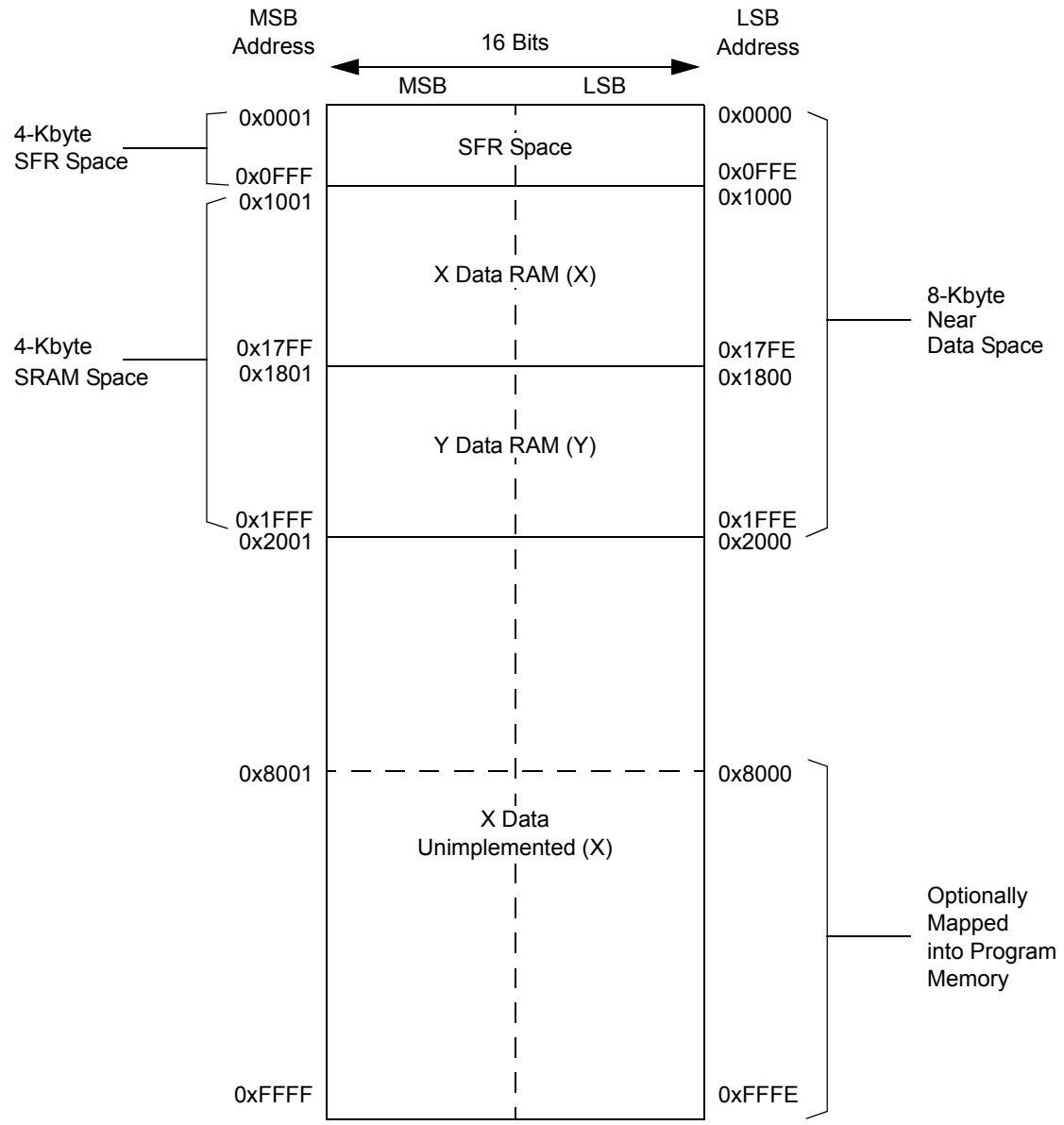

Note: Memory areas are not shown to scale.

FIGURE 4-8: DATA MEMORY MAP FOR dsPIC33EP64GS50X DEVICES

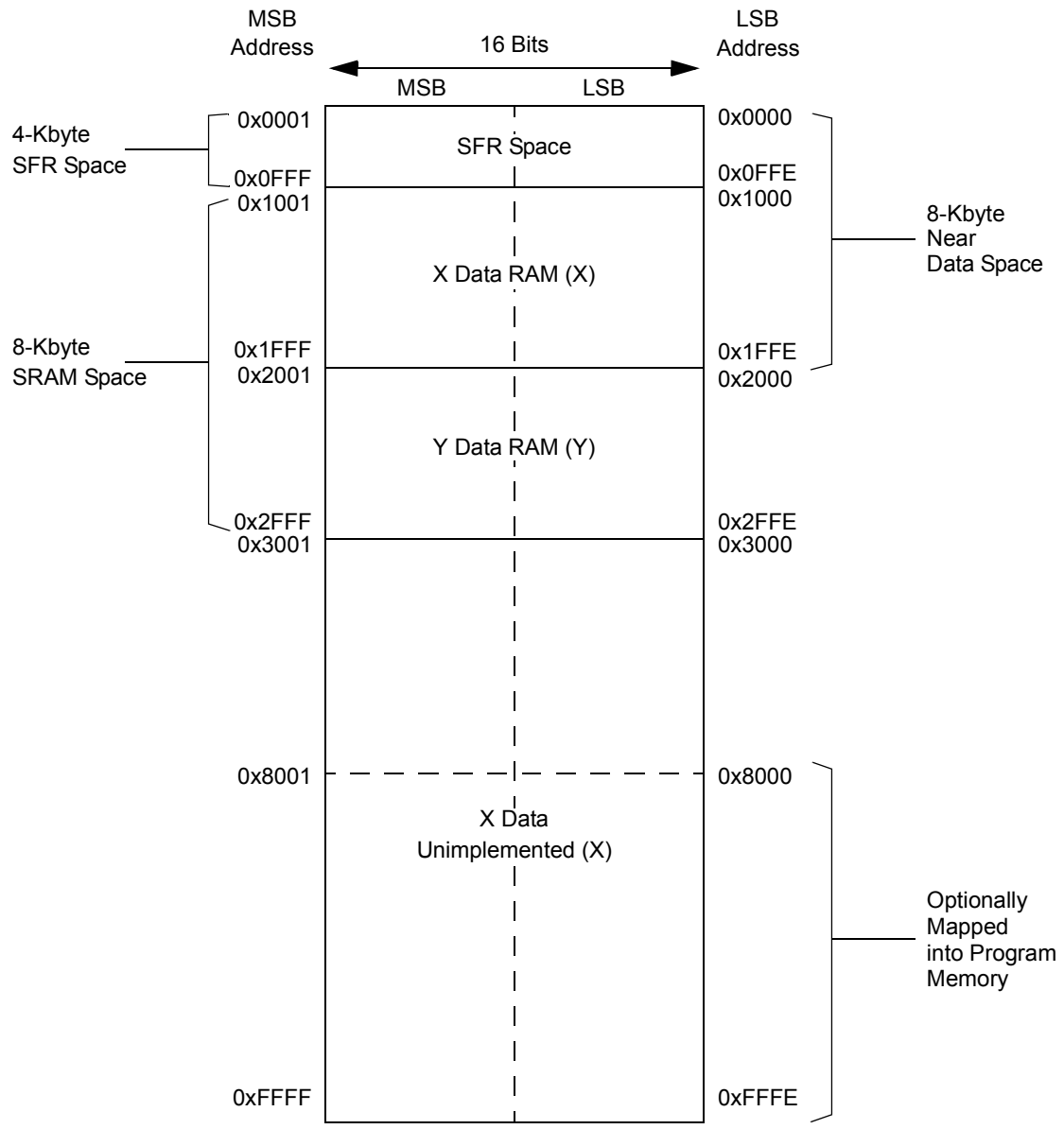

Note: Memory areas are not shown to scale.

© 2013-2015 Microchip Technology Inc.

4.2.5 X AND Y DATA SPACES

The dsPIC33EPXXGS50X core has two Data Spaces, X and Y. These Data Spaces can be considered either separate (for some DSP instructions) or as one unified linear address range (for MCU instructions). The Data Spaces are accessed using two Address Generation Units (AGUs) and separate data paths. This feature allows certain instructions to concurrently fetch two words from RAM, thereby enabling efficient execution of DSP algorithms, such as Finite Impulse Response (FIR) filtering and Fast Fourier Transform (FFT).

The X Data Space is used by all instructions and supports all addressing modes. X Data Space has separate read and write data buses. The X read data bus is the read data path for all instructions that view Data Space as combined X and Y address space. It is also the X data prefetch path for the dual operand DSP instructions (`MAC` class).

The Y Data Space is used in concert with the X Data Space by the `MAC` class of instructions (`CLR`, `ED`, `EDAC`, `MAC`, `MOVSAC`, `MPY`, `MPY.N` and `MSC`) to provide two concurrent data read paths.

Both the X and Y Data Spaces support Modulo Addressing mode for all instructions, subject to addressing mode restrictions. Bit-Reversed Addressing mode is only supported for writes to X Data Space.

All data memory writes, including in DSP instructions, view Data Space as combined X and Y address space. The boundary between the X and Y Data Spaces is device-dependent and is not user-programmable.

4.3 Memory Resources

Many useful resources are provided on the main product page of the Microchip web site for the devices listed in this data sheet. This product page contains the latest updates and additional information.

4.3.1 KEY RESOURCES

- Code Samples
- Application Notes
- Software Libraries
- Webinars
- All Related *“dsPIC33/PIC24 Family Reference Manual”* Sections
- Development Tools

4.4 Special Function Register Maps

TABLE 4-1: CPU CORE REGISTER MAP

SFR Name	Addr.	Bit 15	Bit 14	Bit 13	Bit 12	Bit 11	Bit 10	Bit 9	Bit 8	Bit 7	Bit 6	Bit 5	Bit 4	Bit 3	Bit 2	Bit 1	Bit 0	All Resets
W0	0000	W0 (WREG)																xxxx
W1	0002	W1																xxxx
W2	0004	W2																xxxx
W3	0006	W3																xxxx
W4	0008	W4																xxxx
W5	000A	W5																xxxx
W6	000C	W6																xxxx
W7	000E	W7																xxxx
W8	0010	W8																xxxx
W9	0012	W9																xxxx
W10	0014	W10																xxxx
W11	0016	W11																xxxx
W12	0018	W12																xxxx
W13	001A	W13																xxxx
W14	001C	W14																xxxx
W15	001E	W15																xxxx
SPLIM	0020	SPLIM																0000
ACCAL	0022	ACCAL																0000
ACCAH	0024	ACCAH																0000
ACCAU	0026	Sign Extension of ACCA<39>								ACCAU								0000
ACCBL	0028	ACCBL																0000
ACCBH	002A	ACCBH																0000
ACCBU	002C	Sign Extension of ACCB<39>								ACCBU								0000
PCL	002E	PCL<15:1>															—	0000
PCH	0030	—	—	—	—	—	—	—	—	—	PCH<6:0>							0000
DSRPAG	0032	—	—	—	—	—	—	Extended Data Space (EDS) Read Page Register (DSRPAG<9:0>)										0001
DSWPAG(1)	0034	—	—	—	—	—	—	—	Extended Data Space (EDS) Write Page Register (DSWPAG8:0>)(1)									0001
RCOUNT	0036	RCOUNT<15:0>																0000
DCOUNT	0038	DO Loop Count Register (DCOUNT<15:0>)																0000
DOSTARTL	003A	DO Start Address Register Low (DOSTARTL<15:1>)															—	0000
DOSTARTH	003C	—	—	—	—	—	—	—	—	—	—	DO Start Address Register High (DOSTARTH<5:0>)						0000

Legend: x = unknown value on Reset; — = unimplemented, read as '0'. Reset values are shown in hexadecimal.

Note 1: The contents of this register should never be modified. The DSWPAG must always point to the first page.

© 2013-2015 Microchip Technology Inc.

TABLE 4-1: CPU CORE REGISTER MAP (CONTINUED)

SFR Name	Addr.	Bit 15	Bit 14	Bit 13	Bit 12	Bit 11	Bit 10	Bit 9	Bit 8	Bit 7	Bit 6	Bit 5	Bit 4	Bit 3	Bit 2	Bit 1	Bit 0	All Resets
DOENDL	003E	DO Loop End Address Register Low (DOENDL<15:1>)															—	0000
DOENDH	0040	—	—	—	—	—	—	—	—	—	—	DO Loop End Address Register High (DOENDH<5:0>)						0000
SR	0042	OA	OB	SA	SB	OAB	SAB	DA	DC	IPL2	IPL1	IPL0	RA	N	OV	Z	C	0000
CORCON	0044	VAR	—	US1	US0	EDT	DL2	DL1	DL0	SATA	SATB	SATDW	ACCSAT	IPL3	SFA	RND	IF	0020
MODCON	0046	XMODEN	YMODEN	—	—	BWM3	BWM2	BWM1	BWM0	YWM3	YWM2	YWM1	YWM0	XWM3	XWM2	XWM1	XWM0	0000
XMODSRT	0048	X Mode Start Address Register (XMODSRT<15:1>)															—	0000
XMODEND	004A	X Mode End Address Register (XMODEND<15:1>)															—	0001
YMODSRT	004C	Y Mode Start Address Register (YMODSRT<15:1>)															—	0000
YMODEND	004E	Y Mode End Address Register (YMODEND<15:1>)															—	0001
XBREV	0050	BREN	XBREV<14:0>															0000
DISICNT	0052	—	—	DISICNT<13:0>														0000
TBLPAG	0054	—	—	—	—	—	—	—	—	TBLPAG<7:0>								0000
CTXTSTAT	005A	—	—	—	—	—	CCTXI2	CCTXI1	CCTXI0	—	—	—	—	—	MCTXI2	MCTXI1	MCTXI0	0000

Legend: x = unknown value on Reset; — = unimplemented, read as '0'. Reset values are shown in hexadecimal.

Note 1: The contents of this register should never be modified. The DSWPAG must always point to the first page.

© 2013-2015 Microchip Technology Inc.

TABLE 4-2: INTERRUPT CONTROLLER REGISTER MAP

SFR Name	Addr.	Bit 15	Bit 14	Bit 13	Bit 12	Bit 11	Bit 10	Bit 9	Bit 8	Bit 7	Bit 6	Bit 5	Bit 4	Bit 3	Bit 2	Bit 1	Bit 0	All Resets
IFS0	0800	NVMIF	—	ADCIF	U1TXIF	U1RXIF	SPI1IF	SPI1EIF	T3IF	T2IF	OC2IF	IC2IF	—	T1IF	OC1IF	IC1IF	INT0IF	0000
IFS1	0802	U2TXIF	U2RXIF	INT2IF	T5IF	T4IF	OC4IF	OC3IF	—	—	—	—	INT1IF	CNIF	AC1IF	MI2C1IF	SI2C1IF	0000
IFS2	0804	—	—	—	—	—	—	—	—	—	IC4IF	IC3IF	—	—	—	SPI2IF	SPI2EIF	0000
IFS3	0806	—	—	—	—	—	—	PSEMIF	—	—	INT4IF	—	—	—	MI2C2IF	SI2C2IF	—	0000
IFS4	0808	—	—	—	—	—	—	PSESIF	—	—	—	—	—	—	U2EIF	U1EIF	—	0000
IFS5	080A	PWM2IF	PWM1IF	—	—	—	—	—	—		—	—	—	—	—	—	—	0000
IFS6	080C	ADCAN1IF	ADCAN0IF	—	—	—	—	AC4IF	AC3IF	AC2IF	—	—	—	—	PWM5IF	PWM4IF	PWM3IF	0000
IFS7	080E	—	—	—	—	—	—	—	—	—	—	ADCAN7IF	ADCAN6IF	ADCAN5IF	ADCAN4IF	ADCAN3IF	ADCAN2IF	0000
IFS8	0810	JTAGIF	ICDIF	—	—	—	—	—	—	—	—	—	—	—	—	—	—	0000
IFS9	0812	ADCAN16IF(1)	ADCAN15IF(1)	ADCAN14IF(2)	ADCAN13IF(1)	ADCAN12IF(2)	ADCAN11IF(2)	ADCAN10IF(2)	ADCAN9IF(2)	ADCAN8IF(2)	—	—	—	—	—	—	—	0000
IFS10	0814	—	I2C2BCIF	I2C1BCIF	—	—	—	—	—	—	—	—	ADCAN21IF	ADCAN20IF	ADCAN19IF	ADCAN18IF	ADCAN17IF(2)	0000
IFS11	0816	—	—	—	—	—	—	—	—	—	—	—	ADFLTR1IF	ADFLTR0IF	ADCMP1IF	ADCMP0IF	—	0000
IEC0	0820	NVMIE	—	ADCIE	U1TXIE	U1RXIE	SPI1IE	SPI1EIE	T3IE	T2IE	OC2IE	IC2IE	—	T1IE	OC1IE	IC1IE	INT0IE	0000
IEC1	0822	U2TXIE	U2RXIE	INT2IE	T5IE	T4IE	OC4IE	OC3IE	—	—	—	—	INT1IE	CNIE	AC1IF	MI2C1IE	SI2C1IE	0000
IEC2	0824	—	—	—	—	—	—	—	—	—	IC4IE	IC3IE	—	—	—	SPI2IE	SPI2EIE	0000
IEC3	0826	—	—	—	—	—	—	PSEMIE	—	—	INT4IE	—	—	—	MI2C2IE	SI2C2IE	—	0000
IEC4	0828	—	—	—	—	—	—	PSESIE	—	—	—	—	—	—	U2EIE	U1EIE	—	0000
IEC5	082A	PWM2IE	PWM1IE	—	—	—	—	—	—	—	—	—	—	—	—	—	—	0000
IEC6	082C	ADCAN1IE	ADCAN0IE	—	—	—	—	AC4IE	AC3IE	AC2IE	—	—	—	—	PWM5IE	PWM4IE	PWM3IE	0000
IEC7	082E	—	—	—	—	—	—	—	—	—	—	ADCAN7IE	ADCAN6IE	ADCAN5IE	ADCAN4IE	ADCAN3IE	ADCAN2IE	0000
IEC8	0830	JTAGIE	ICDIE	—	—	—	—	—	—	—	—	—	—	—	—	—	—	0000
IEC9	0832	ADCAN16IE(1)	ADCAN15IE(1)	ADCAN14IE(2)	ADCAN13IE(1)	ADCAN12IE(2)	ADCAN11IE(2)	ADCAN10IE(2)	ADCAN9IE(2)	ADCAN8IE(2)	—	—	—	—	—	—	—	0000
IEC10	0834	—	I2C2BCIE	I2C1BCIE	—	—	—	—	—	—	—	—	ADCAN21IE	ADCAN20IE	ADCAN19IE	ADCAN18IE	ADCAN17IE(2)	0000
IEC11	0836	—	—	—	—	—	—	—	—	—	—	—	ADFLTR1IE	ADFLTR0IE	ADCMP1IE	ADCMP0IE	—	0000
IPC0	0840	—	T1IP2	T1IP1	T1IP0	—	OC1IP2	OC1IP1	OC1IP0	—	IC1IP2	IC1IP1	IC1IP0	—	INT0IP2	INT0IP1	INT0IP0	4444
IPC1	0842	—	T2IP2	T2IP1	T2IP0	—	OC2IP2	OC2IP1	OC2IP0	—	IC2IP2	IC2IP1	IC2IP0	—	—	—	—	4440
IPC2	0844	—	U1RXIP2	U1RXIP1	U1RXIP0	—	SPI1IP2	SPI1IP1	SPI1IP0	—	SPI1EIP2	SPI1EIP1	SPI1EIP0	—	T3IP2	T3IP1	T3IP0	4444
IPC3	0846	—	NVMIP2	NVMIP1	NVMIP0	—	—	—	—	—	ADCIP2	ADCIP1	ADCIP0	—	U1TXIP2	U1TXIP1	U1TXIP0	4044
IPC4	0848	—	CNIP2	CNIP1	CNIP0	—	AC1IP2	AC1IP1	AC1IP0	—	MI2C1IP2	MI2C1IP1	MI2C1IP0	—	SI2C1IP2	SI2C1IP1	SI2C1IP0	4444
IPC5	084A	—	—	—	—	—	—	—	—	—	—	—	—	—	INT1IP2	INT1IP1	INT1IP0	0004
IPC6	084C	—	T4IP2	T4IP1	T4IP0	—	OC4IP2	OC4IP1	OC4IP0	—	OC3IP2	OC3IP1	OC3IP0	—	—	—	—	4440
IPC7	084E	—	U2TXIP2	U2TXIP1	U2TXIP0	—	U2RXIP2	U2RXIP1	U2RXIP0	—	INT2IP2	INT2IP1	INT2IP0	—	T5IP2	T5IP1	T5IP0	4444
IPC8	0850	—	—	—	—	—	—	—	—	—	SPI2IP2	SPI2IP1	SPI2IP0	—	SPI2EIP2	SPI2EIP1	SPI2EIP0	0044
IPC9	0852	—	—	—	—	—	IC4IP2	IC4IP1	IC4IP0	—	IC3IP2	IC3IP1	IC3IP0	—	—	—	—	0440

Legend: — = unimplemented, read as '0'. Reset values are shown in hexadecimal.

Note 1: Only available on dsPIC33EPXXGS506 devices.

2: Only available on dsPIC33EPXXGS504/505 and dsPIC33EPXXGS506 devices.

© 2013-2015 Microchip Technology Inc.

TABLE 4-2: INTERRUPT CONTROLLER REGISTER MAP (CONTINUED)

SFR Name	Addr.	Bit 15	Bit 14	Bit 13	Bit 12	Bit 11	Bit 10	Bit 9	Bit 8	Bit 7	Bit 6	Bit 5	Bit 4	Bit 3	Bit 2	Bit 1	Bit 0	All Resets
IPC12	0858	—	—	—	—	—	MI2C2IP2	MI2C2IP1	MI2C2IP0	—	SI2C2IP2	SI2C2IP1	SI2C2IP0	—	—	—	—	0440
IPC13	085A	—	—	—	—	—	INT4IP2	INT4IP1	INT4IP0	—	—	—	—	—	—	—	—	0400
IPC14	085C	—	—	—	—	—	—	—	—	—	PSEMIP2	PSEMIP1	PSEMIP0	—	—	—	—	0040
IPC16	0860	—	—	—	—	—	U2EIP2	U2EIP1	U2EIP0	—	U1EIP2	U1EIP1	U1EIP0	—	—	—	—	0440
IPC18	0864	—	—	—	—	—	—	—	—	—	PSESIP2	PSESIP1	PSESIP0	—	—	—	—	0040
IPC23	086E	—	PWM2IP2	PWM2IP1	PWM2IP0	—	PWM1IP2	PWM1IP1	PWM1IP0	—	—	—	—	—	—	—	—	4400
IPC24	0870	—	—	—	—	—	PWM5IP2	PWM5IP1	PWM5IP0	—	PWM4IP2	PWM4IP1	PWM4IP0	—	PWM3IP2	PWM3IP1	PWM3IP0	0444
IPC25	0872	—	AC2IP2	AC2IP1	AC2IP0	—	—	—	—	—	—	—	—	—	—	—	—	4000
IPC26	0874	—	—	—	—	—	—	—	—	—	AC4IP2	AC4IP1	AC4IP0	—	AC3IP2	AC3IP1	AC3IP0	0044
IPC27	0876	—	ADCAN1IP2	ADCAN1IP1	ADCAN1IP0	—	ADCAN0IP2	ADCAN0IP1	ADCAN0IP0	—	—	—	—	—	—	—	—	4400
IPC28	0878	—	ADCAN5IP2	ADCAN5IP1	ADCAN5IP0	—	ADCAN4IP2	ADCAN4IP1	ADCAN4IP0	—	ADCAN3IP2	ADCAN3IP1	ADCAN3IP0	—	ADCAN2IP2	ADCAN2IP1	ADCAN2IP0	4444
IPC29	087A	—	—	—	—	—	—	—	—	—	ADCAN7IP2	ADCAN7IP1	ADCAN7IP0	—	ADCAN6IP2	ADCAN6IP1	ADCAN6IP0	0044
IPC35	0886	—	JTAGIP2	JTAGIP1	JTAGIP0	—	ICDIP2	ICDIP1	ICDIP0	—	—	—	—	—	—	—	—	4400
IPC37	088A	—	ADCAN8IP2(2)	ADCAN8IP1(2)	ADCAN8IP0(2)	—	—	—	—	—	—	—	—	—	—	—	—	4000
IPC38	088C	—	ADCAN12IP2(2)	ADCAN12IP1(2)	ADCAN12IP0(2)	—	ADCAN11IP2(2)	ADCAN11IP1(2)	ADCAN11IP0(2)	—	ADCAN10IP2(2)	ADCAN10IP1(2)	ADCAN10IP0(2)	—	ADCAN9IP2(2)	ADCAN9IP1(2)	ADCAN9IP0(2)	4444
IPC39	088F	—	ADCAN16IP2(1)	ADCAN16IP1(1)	ADCAN16IP0(1)	—	ADCAN15IP2(1)	ADCAN15IP1(1)	ADCAN15IP0(1)	—	ADCAN14IP2(2)	ADCAN14IP1(2)	ADCAN14IP0(2)	—	ADCAN13IP2(1)	ADCAN13IP1	ADCAN13IP0	4444
IPC40	0890	—	ADCAN20IP2	ADCAN20IP1	ADCAN20IP0	—	ADCAN19IP2	ADCAN19IP1	ADCAN19IP0	—	ADCAN18IP2	ADCAN18IP1	ADCAN18IP0	—	ADCAN17IP2(2)	ADCAN17IP1(2)	ADCAN17IP0(2)	4444
IPC41	0892	—	—	—	—	—	—	—	—	—	—	—	—	—	ADCAN21IP2	ADCAN21IP1	ADCAN21IP0	0004
IPC43	0896	—	—	—	—	—	I2C2BCIP2	I2C2BCIP1	I2C2BCIP0	—	I2C1BCIP2	I2C1BCIP1	I2C1BCIP0	—	—	—	—	0440
IPC44	0898	—	ADFLTR0IP2	ADFLTR0IP1	ADFLTR0IP0	—	ADCMP1IP2	ADCMP1IP1	ADCMP1IP0	—	ADCMP0IP2	ADCMP0IP1	ADCMP0IP0	—	—	—	—	4440
IPC45	089A	—	—	—	—	—	—	—	—	—	—	—	—	—	ADFLTR1IP2	ADFLTR1IP1	ADFLTR1IP0	0004
INTCON1	08C0	NSTDIS	OVAERR	OVBERR	COVAERR	COVBERR	OVATE	OVBTE	COVTE	SFTACERR	DIV0ERR	—	MATHERR	ADDRERR	STKERR	OSCFAIL	—	0000
INTCON2	08C2	GIE	DISI	SWTRAP	—	—	—	—	AIVTEN	—	—	—	INT4EP	—	INT2EP	INT1EP	INT0EP	8000
INTCON3	08C4	—	—	—	—	—	—	—	NAE	—	—	—	DOOVR	—	—	—	APLL	0000
INTCON4	08C6	—	—	—	—	—	—	—	—	—	—	—	—	—	—	—	SGHT	0000
INTTREG	08C8	—	—	—	—	ILR3	ILR2	ILR1	ILR0	VECNUM7	VECNUM6	VECNUM5	VECNUM4	VECNUM3	VECNUM2	VECNUM1	VECNUM0	0000

Legend: — = unimplemented, read as '0'. Reset values are shown in hexadecimal.

Note 1: Only available on dsPIC33EPXXGS506 devices.

2: Only available on dsPIC33EPXXGS504/505 and dsPIC33EPXXGS506 devices.

© 2013-2015 Microchip Technology Inc.

TABLE 4-3: TIMER1 THROUGH TIMER5 REGISTER MAP

SFR Name	Addr.	Bit 15	Bit 14	Bit 13	Bit 12	Bit 11	Bit 10	Bit 9	Bit 8	Bit 7	Bit 6	Bit 5	Bit 4	Bit 3	Bit 2	Bit 1	Bit 0	All Resets
TMR1	0100	Timer1 Register																xxxx
PR1	0102	Period Register 1																FFFF
T1CON	0104	TON	—	TSIDL	—	—	—	—	—	—	TGATE	TCKPS1	TCKPS0	—	TSYNC	TCS	—	0000
TMR2	0106	Timer2 Register																xxxx
TMR3HLD	0108	Timer3 Holding Register (for 32-bit timer operations only)																xxxx
TMR3	010A	Timer3 Register																xxxx
PR2	010C	Period Register 2																FFFF
PR3	010E	Period Register 3																FFFF
T2CON	0110	TON	—	TSIDL	—	—	—	—	—	—	TGATE	TCKPS1	TCKPS0	T32	—	TCS	—	0000
T3CON	0112	TON	—	TSIDL	—	—	—	—	—	—	TGATE	TCKPS1	TCKPS0	—	—	TCS	—	0000
TMR4	0114	Timer4 Register																xxxx
TMR5HLD	0116	Timer5 Holding Register (for 32-bit operations only)																xxxx
TMR5	0118	Timer5 Register																xxxx
PR4	011A	Period Register 4																FFFF
PR5	011C	Period Register 5																FFFF
T4CON	011E	TON	—	TSIDL	—	—	—	—	—	—	TGATE	TCKPS1	TCKPS0	T32	—	TCS	—	0000
T5CON	0120	TON	—	TSIDL	—	—	—	—	—	—	TGATE	TCKPS1	TCKPS0	—	—	TCS	—	0000

Legend: x = unknown value on Reset; — = unimplemented, read as '0'. Reset values are shown in hexadecimal.

© 2013-2015 Microchip Technology Inc.

TABLE 4-4: INPUT CAPTURE 1 THROUGH INPUT CAPTURE 4 REGISTER MAP

SFR Name	Addr.	Bit 15	Bit 14	Bit 13	Bit 12	Bit 11	Bit 10	Bit 9	Bit 8	Bit 7	Bit 6	Bit 5	Bit 4	Bit 3	Bit 2	Bit 1	Bit 0	All Resets
IC1CON1	0140	—	—	ICSIDL	ICTSEL2	ICTSEL1	ICTSEL0	—	—	—	ICI1	ICI0	ICOV	ICBNE	ICM2	ICM1	ICM0	0000
IC1CON2	0142	—	—	—	—	—	—	—	IC32	ICTRIG	TRIGSTAT	—	SYNCSEL4	SYNCSEL3	SYNCSEL2	SYNCSEL1	SYNCSEL0	000D
IC1BUF	0144	Input Capture 1 Buffer Register																xxxx
IC1TMR	0146	Input Capture 1 Timer Register																0000
IC2CON1	0148	—	—	ICSIDL	ICTSEL2	ICTSEL1	ICTSEL0	—	—	—	ICI1	ICI0	ICOV	ICBNE	ICM2	ICM1	ICM0	0000
IC2CON2	014A	—	—	—	—	—	—	—	IC32	ICTRIG	TRIGSTAT	—	SYNCSEL4	SYNCSEL3	SYNCSEL2	SYNCSEL1	SYNCSEL0	000D
IC2BUF	014C	Input Capture 2 Buffer Register																xxxx
IC2TMR	014E	Input Capture 2 Timer Register																0000
IC3CONL	0150	—	—	ICSIDL	ICTSEL2	ICTSEL1	ICTSEL0	—	—	—	ICI1	ICI0	ICOV	ICBNE	ICM2	ICM1	ICM0	0000
IC3CONH	0152	—	—	—	—	—	—	—	IC32	ICTRIG	TRIGSTAT	—	SYNCSEL4	SYNCSEL3	SYNCSEL2	SYNCSEL1	SYNCSEL0	000D
IC3BUF	0154	Input Capture 3 Buffer Register																xxxx
IC3TMR	0156	Input Capture 3 Timer Register																0000
IC4CON1	0158	—	—	ICSIDL	ICTSEL2	ICTSEL1	ICTSEL0	—	—	—	ICI1	ICI0	ICOV	ICBNE	ICM2	ICM1	ICM0	0000
IC4CON2	015A	—	—	—	—	—	—	—	IC32	ICTRIG	TRIGSTAT	—	SYNCSEL4	SYNCSEL3	SYNCSEL2	SYNCSEL1	SYNCSEL0	000D
IC4BUF	015C	Input Capture 4 Buffer Register																xxxx
IC4TMR	015E	Input Capture 4 Timer Register																0000

Legend: x = unknown value on Reset; — = unimplemented, read as '0'. Reset values are shown in hexadecimal.

© 2013-2015 Microchip Technology Inc.

TABLE 4-5: OUTPUT COMPARE 1 THROUGH OUTPUT COMPARE 4 REGISTER MAP

SFR Name	Addr.	Bit 15	Bit 14	Bit 13	Bit 12	Bit 11	Bit 10	Bit 9	Bit 8	Bit 7	Bit 6	Bit 5	Bit 4	Bit 3	Bit 2	Bit 1	Bit 0	All Resets
OC1CON1	0900	—	—	OCSIDL	OCTSEL2	OCTSEL1	OCTSEL0	—	—	ENFLTA	—	—	OCFLTA	TRIGMODE	OCM2	OCM1	OCM0	0000
OC1CON2	0902	FLTMD	FLTOUT	FLTTRIEN	OCINV	—	—	—	OC32	OCTRIG	TRIGSTAT	OCTRIS	SYNCSEL4	SYNCSEL3	SYNCSEL2	SYNCSEL1	SYNCSEL0	000C
OC1RS	0904	Output Compare 1 Secondary Register																xxxx
OC1R	0906	Output Compare 1 Register																xxxx
OC1TMR	0908	Timer Value 1 Register																xxxx
OC2CON1	090A	—	—	OCSIDL	OCTSEL2	OCTSEL1	OCTSEL0	—	—	ENFLTA	—	—	OCFLTA	TRIGMODE	OCM2	OCM1	OCM0	0000
OC2CON2	090C	FLTMD	FLTOUT	FLTTRIEN	OCINV	—	—	—	OC32	OCTRIG	TRIGSTAT	OCTRIS	SYNCSEL4	SYNCSEL3	SYNCSEL2	SYNCSEL1	SYNCSEL0	000C
OC2RS	090E	Output Compare 2 Secondary Register																xxxx
OC2R	0910	Output Compare 2 Register																xxxx
OC2TMR	0912	Timer Value 2 Register																xxxx
OC3CON1	0914	—	—	OCSIDL	OCTSEL2	OCTSEL1	OCTSEL0	—	—	ENFLTA	—	—	OCFLTA	TRIGMODE	OCM2	OCM1	OCM0	0000
OC3CON2	0916	FLTMD	FLTOUT	FLTTRIEN	OCINV	—	—	—	OC32	OCTRIG	TRIGSTAT	OCTRIS	SYNCSEL4	SYNCSEL3	SYNCSEL2	SYNCSEL1	SYNCSEL0	000C
OC3RS	0918	Output Compare 3 Secondary Register																xxxx
OC3R	091A	Output Compare 3 Register																xxxx
OC3TMR	091C	Timer Value 3 Register																xxxx
OC4CON1	091E	—	—	OCSIDL	OCTSEL2	OCTSEL1	OCTSEL0	—	—	ENFLTA	—	—	OCFLTA	TRIGMODE	OCM2	OCM1	OCM0	0000
OC4CON2	0920	FLTMD	FLTOUT	FLTTRIEN	OCINV	—	—	—	OC32	OCTRIG	TRIGSTAT	OCTRIS	SYNCSEL4	SYNCSEL3	SYNCSEL2	SYNCSEL1	SYNCSEL0	000C
OC4RS	0922	Output Compare 4 Secondary Register																xxxx
OC4R	0924	Output Compare 4 Register																xxxx
OC4TMR	0926	Timer Value 4 Register																xxxx

Legend: x = unknown value on Reset; — = unimplemented, read as '0'. Reset values are shown in hexadecimal.

© 2013-2015 Microchip Technology Inc.

TABLE 4-6: PWM REGISTER MAP

SFR Name	Addr.	Bit 15	Bit 14	Bit 13	Bit 12	Bit 11	Bit 10	Bit 9	Bit 8	Bit 7	Bit 6	Bit 5	Bit 4	Bit 3	Bit 2	Bit 1	Bit 0	All Resets
PTCON	0C00	PTEN	—	PTSIDL	SESTAT	SEIEN	EIPU	SYNCPOL	SYNCOEN	SYNCEN	SYNCSRC2	SYNCSRC1	SYNCSRC0	SEVTPS3	SEVTPS2	SEVTPS1	SEVTPS0	0000
PTCON2	0C02	—	—	—	—	—	—	—	—	—	—	—	—	—	PCLKDIV<2:0>			0000
PTPER	0C04	PWMx Primary Master Time Base Period Register (PTPER<15:0>)																FFF8
SEVTCMP	0C06	PWMx Special Event Compare Register (SEVTCMP12:0>)													—	—	—	0000
MDC	0C0A	PWMx Master Duty Cycle Register (MDC<15:0>)																0000
STCON	0C0E	—	—	—	SESTAT	SEIEN	EIPU	SYNCPOL	SYNCOEN	SYNCEN	SYNCSRC2	SYNCSRC1	SYNCSRC0	SEVTPS3	SEVTPS2	SEVTPS1	SEVTPS0	0000
STCON2	0C10	—	—	—	—	—	—	—	—	—	—	—	—	—	PCLKDIV<2:0>			0000
STPER	0C12	PWMx Secondary Master Time Base Period Register (STPER<15:0>)																FFF8
SSEVTCMP	0C14	PWMx Secondary Special Event Compare Register (SSEVTCMP<12:0>)													—	—	—	0000
CHOP	0C1A	CHPCLKEN	—	—	—	—	—	CHOPCLK6	CHOPCLK5	CHOPCLK4	CHOPCLK3	CHOPCLK2	CHOPCLK1	CHOPCLK0	—	—	—	0000
PWMKEY	0C1E	PWMx Protection Lock/Unlock Key Register (PWMKEY<15:0>)																0000

Legend: — = unimplemented, read as '0'. Reset values are shown in hexadecimal.

TABLE 4-7: PWM GENERATOR 1 REGISTER MAP

SFR Name	Addr.	Bit 15	Bit 14	Bit 13	Bit 12	Bit 11	Bit 10	Bit 9	Bit 8	Bit 7	Bit 6	Bit 5	Bit 4	Bit 3	Bit 2	Bit 1	Bit 0	All Resets
PWMCON1	0C20	FLTSTAT	CLSTAT	TRGSTAT	FLTIEN	CLIEN	TRGIEN	ITB	MDCS	DTC1	DTC0	—	—	MTBS	CAM	XPRES	IUE	0000
IOCON1	0C22	PENH	PENL	POLH	POLL	PMOD1	PMOD0	OVRENH	OVRENL	OVRDAT1	OVRDAT0	FLTDAT1	FLTDAT0	CLDAT1	CLDAT0	SWAP	OSYNC	C000
FCLCON1	0C24	IFLTMOD	CLSRC4	CLSRC3	CLSRC2	CLSRC1	CLSRC0	CLPOL	CLMOD	FLTSRC4	FLTSRC3	FLTSRC2	FLTSRC1	FLTSRC0	FLTPOL	FLTMOD1	FLTMOD0	0000
PDC1	0C26	PWM1 Generator Duty Cycle Register (PDC1<15:0>)																0000
PHASE1	0C28	PWM1 Primary Phase-Shift or Independent Time Base Period Register (PHASE1<15:0>)																0000
DTR1	0C2A	—	—	PWM1 Dead-Time Register (DTR1<13:0>)														0000
ALTDTR1	0C2C	—	—	PWM1 Alternate Dead-Time Register (ALTDTR1<13:0>)														0000
SDC1	0C2E	PWM1 Secondary Duty Cycle Register (SDC1<15:0>)																0000
SPHASE1	0C30	PWM1 Secondary Phase-Shift Register (SPHASE1<15:0>)																0000
TRIG1	0C32	PWM1 Primary Trigger Compare Value Register (TRGCMP<12:0>)													—	—	—	0000
TRGCON1	0C34	TRGDIV3	TRGDIV2	TRGDIV1	TRGDIV0	—	—	—	—	DTM	—	TRGSTRT5	TRGSTRT4	TRGSTRT3	TRGSTRT2	TRGSTRT1	TRGSTRT0	0000
STRIG1	0C36	PWM1 Secondary Trigger Compare Value Register (STRGCMP<12:0>)													—	—	—	0000
PWMCAP1	0C38	PWM1 Primary Time Base Capture Register (PWMCAP<12:0>)													—	—	—	0000
LEBCON1	0C3A	PHR	PHF	PLR	PLF	FLTLEBEN	CLLEBEN	—	—	—	—	BCH	BCL	BPHH	BPHL	BPLH	BPLL	0000
LEBDLY1	0C3C	—	—	—	—	PWM1 Leading-Edge Blanking Delay Register (LEB<8:0>)									—	—	—	0000
AUXCON1	0C3E	HRPDIS	HRDDIS	—	—	BLANKSEL3	BLANKSEL2	BLANKSEL1	BLANKSEL0	—	—	CHOPSEL3	CHOPSEL2	CHOPSEL1	CHOPSEL0	CHOPHEN	CHOPLEN	0000

Legend: — = unimplemented, read as '0'. Reset values are shown in hexadecimal.

© 2013-2015 Microchip Technology Inc.

TABLE 4-8: PWM GENERATOR 2 REGISTER MAP

SFR Name	Addr.	Bit 15	Bit 14	Bit 13	Bit 12	Bit 11	Bit 10	Bit 9	Bit 8	Bit 7	Bit 6	Bit 5	Bit 4	Bit 3	Bit 2	Bit 1	Bit 0	All Resets
PWMCON2	0C40	FLTSTAT	CLSTAT	TRGSTAT	FLTIEN	CLIEN	TRGIEN	ITB	MDCS	DTC1	DTC0	—	—	MTBS	CAM	XPRES	IUE	0000
IOCON2	0C42	PENH	PENL	POLH	POLL	PMOD1	PMOD0	OVRENH	OVRENL	OVRDAT1	OVRDAT0	FLTDAT1	FLTDAT0	CLDAT1	CLDAT0	SWAP	OSYNC	C000
FCLCON2	0C44	IFLTMOD	CLSRC4	CLSRC3	CLSRC2	CLSRC1	CLSRC0	CLPOL	CLMOD	FLTSRC4	FLTSRC3	FLTSRC2	FLTSRC1	FLTSRC0	FLTPOL	FLTMOD1	FLTMOD0	0000
PDC2	0C46	PWM2 Generator Duty Cycle Register (PDC2<15:0>)																0000
PHASE2	0C48	PWM2 Primary Phase-Shift or Independent Time Base Period Register (PHASE2<15:0>)																0000
DTR2	0C4A	—	—	PWM2 Dead-Time Register (DTR2<13:0>)														0000
ALTDTR2	0C4C	—	—	PWM2 Alternate Dead-Time Register (ALTDTR2<13:0>)														0000
SDC2	0C4E	PWM2 Secondary Duty Cycle Register (SDC2<15:0>)																0000
SPHASE2	0C50	PWM2 Secondary Phase-Shift Register (SPHASE2<15:0>)																0000
TRIG2	0C52	PWM2 Primary Trigger Compare Value Register (TRGCMP<12:0>)													—	—	—	0000
TRGCON2	0C54	TRGDIV3	TRGDIV2	TRGDIV1	TRGDIV0	—	—	—	—	DTM	—	TRGSTRT5	TRGSTRT4	TRGSTRT3	TRGSTRT2	TRGSTRT1	TRGSTRT0	0000
STRIG2	0C56	PWM2 Secondary Trigger Compare Value Register (STRGCMP<12:0>)													—	—	—	0000
PWMCAP2	0C58	PWM2 Primary Time Base Capture Register (PWMCAP<12:0>)													—	—	—	0000
LEBCON2	0C5A	PHR	PHF	PLR	PLF	FLTLEBEN	CLLEBEN	—	—	—	—	BCH	BCL	BPHH	BPHL	BPLH	BPLL	0000
LEBDLY2	0C5C	—	—	—	—	PWM2 Leading-Edge Blanking Delay Register (LEB<8:0>)									—	—	—	0000
AUXCON2	0C5E	HRPDIS	HRDDIS	—	—	BLANKSEL3	BLANKSEL2	BLANKSEL1	BLANKSEL0	—	—	CHOPSEL3	CHOPSEL2	CHOPSEL1	CHOPSEL0	CHOPHEN	CHOPLEN	0000

Legend: — = unimplemented, read as '0'. Reset values are shown in hexadecimal.

TABLE 4-9: PWM GENERATOR 3 REGISTER MAP

SFR Name	Addr.	Bit 15	Bit 14	Bit 13	Bit 12	Bit 11	Bit 10	Bit 9	Bit 8	Bit 7	Bit 6	Bit 5	Bit 4	Bit 3	Bit 2	Bit 1	Bit 0	All Resets
PWMCON3	0C60	FLTSTAT	CLSTAT	TRGSTAT	FLTIEN	CLIEN	TRGIEN	ITB	MDCS	DTC1	DTC0	—	—	MTBS	CAM	XPRES	IUE	0000
IOCON3	0C62	PENH	PENL	POLH	POLL	PMOD1	PMOD0	OVRENH	OVRENL	OVRDAT1	OVRDAT0	FLTDAT1	FLTDAT0	CLDAT1	CLDAT0	SWAP	OSYNC	C000
FCLCON3	0C64	IFLTMOD	CLSRC4	CLSRC3	CLSRC2	CLSRC1	CLSRC0	CLPOL	CLMOD	FLTSRC4	FLTSRC3	FLTSRC2	FLTSRC1	FLTSRC0	FLTPOL	FLTMOD1	FLTMOD0	0000
PDC3	0C66	PWM3 Generator Duty Cycle Register (PDC3<15:0>)																0000
PHASE3	0C68	PWM3 Phase-Shift or Independent Time Base Period Register (PHASE3<15:0>)																0000
DTR3	0C6A	—	—	PWM3 Dead-Time Register (DTR3<13:0>)														0000
ALTDTR3	0C6C	—	—	PWM3 Alternate Dead-Time Register (ALTDTR3<13:0>)														0000
SDC3	0C6E	PWM3 Secondary Duty Cycle Register (SDC3<15:0>)																0000
SPHASE3	0C70	PWM3 Secondary Phase-Shift Register (SPHASE3<15:0>)																0000
TRIG3	0C72	PWM3 Primary Trigger Compare Value Register (TRGCMP<12:0>)													—	—	—	0000
TRGCON3	0C74	TRGDIV3	TRGDIV2	TRGDIV1	TRGDIV0	—	—	—	—	DTM	—	TRGSTRT5	TRGSTRT4	TRGSTRT3	TRGSTRT2	TRGSTRT1	TRGSTRT0	0000
STRIG3	0C76	PWM3 Secondary Trigger Compare Value Register (STRGCMP<12:0>)													—	—	—	0000
PWMCAP3	0C78	PWM3 Primary Time Base Capture Register (PWMCAP<12:0>)													—	—	—	0000
LEBCON3	0C7A	PHR	PHF	PLR	PLF	FLTLEBEN	CLLEBEN	—	—	—	—	BCH	BCL	BPHH	BPHL	BPLH	BPLL	0000
LEBDLY3	0C7C	—	—	—	—	PWM3 Leading-Edge Blanking Delay Register (LEB<8:0>)									—	—	—	0000
AUXCON3	0C7E	HRPDIS	HRDDIS	—	—	BLANKSEL3	BLANKSEL2	BLANKSEL1	BLANKSEL0	—	—	CHOPSEL3	CHOPSEL2	CHOPSEL1	CHOPSEL0	CHOPHEN	CHOPLEN	0000

Legend: — = unimplemented, read as '0'. Reset values are shown in hexadecimal.

© 2013-2015 Microchip Technology Inc.

TABLE 4-10: PWM GENERATOR 4 REGISTER MAP

SFR Name	Addr.	Bit 15	Bit 14	Bit 13	Bit 12	Bit 11	Bit 10	Bit 9	Bit 8	Bit 7	Bit 6	Bit 5	Bit 4	Bit 3	Bit 2	Bit 1	Bit 0	All Resets
PWMCON4	0C80	FLTSTAT	CLSTAT	TRGSTAT	FLTIEN	CLIEN	TRGIEN	ITB	MDCS	DTC1	DTC0	—	—	MTBS	CAM	XPRES	IUE	0000
IOCON4	0C82	PENH	PENL	POLH	POLL	PMOD1	PMOD0	OVRENH	OVRENL	OVRDAT1	OVRDAT0	FLTDAT1	FLTDAT0	CLDAT1	CLDAT0	SWAP	OSYNC	C000
FCLCON4	0C84	IFLTMOD	CLSRC4	CLSRC3	CLSRC2	CLSRC1	CLSRC0	CLPOL	CLMOD	FLTSRC4	FLTSRC3	FLTSRC2	FLTSRC1	FLTSRC0	FLTPOL	FLTMOD1	FLTMOD0	0000
PDC4	0C86	PWM4 Generator Duty Cycle Register (PDC4<15:0>)																0000
PHASE4	0C88	PWM4 Phase-Shift or Independent Time Base Period Register (PHASE4<15:0>)																0000
DTR4	0C8A	—	—	PWM4 Dead-Time Register (DTR4<13:0>)														0000
ALTDTR4	0C8C	—	—	PWM4 Alternate Dead-Time Register (ALTDTR4<13:0>)														0000
SDC4	0C8E	PWM4 Secondary Duty Cycle Register (SDC4<15:0>)																0000
SPHASE4	0C90	PWM4 Secondary Phase-Shift Register (SPHASE4<15:0>)																0000
TRIG4	0C92	PWM4 Primary Trigger Compare Value Register (TRGCMP<12:0>)													—	—	—	0000
TRGCON4	0C94	TRGDIV3	TRGDIV2	TRGDIV1	TRGDIV0	—	—	—	—	DTM	—	TRGSTRT5	TRGSTRT4	TRGSTRT3	TRGSTRT2	TRGSTRT1	TRGSTRT0	0000
STRIG4	0C96	PWM4 Secondary Trigger Compare Value Register (STRGCMP<12:0>)													—	—	—	0000
PWMCAP4	0C98	PWM4 Primary Time Base Capture Register (PWMCAP<12:0>)													—	—	—	0000
LEBCON4	0C9A	PHR	PHF	PLR	PLF	FLTLEBEN	CLLEBEN	—	—	—	—	BCH	BCL	BPHH	BPHL	BPLH	BPLL	0000
LEBDLY4	0C9C	—	—	—	—	PWM4 Leading-Edge Blanking Delay Register (LEB<8:0>)									—	—	—	0000
AUXCON4	0C9E	HRPDIS	HRDDIS	—	—	BLANKSEL3	BLANKSEL2	BLANKSEL1	BLANKSEL0	—	—	CHOPSEL3	CHOPSEL2	CHOPSEL1	CHOPSEL0	CHOPHEN	CHOPLEN	0000

Legend: — = unimplemented, read as '0'. Reset values are shown in hexadecimal.

TABLE 4-11: PWM GENERATOR 5 REGISTER MAP

SFR Name	Addr.	Bit 15	Bit 14	Bit 13	Bit 12	Bit 11	Bit 10	Bit 9	Bit 8	Bit 7	Bit 6	Bit 5	Bit 4	Bit 3	Bit 2	Bit 1	Bit 0	All Resets
PWMCON5	0CA0	FLTSTAT	CLSTAT	TRGSTAT	FLTIEN	CLIEN	TRGIEN	ITB	MDCS	DTC1	DTC0	—	—	MTBS	CAM	XPRES	IUE	0000
IOCON5	0CA2	PENH	PENL	POLH	POLL	PMOD1	PMOD0	OVRENH	OVRENL	OVRDAT1	OVRDAT0	FLTDAT1	FLTDAT0	CLDAT1	CLDAT0	SWAP	OSYNC	C000
FCLCON5	0CA4	IFLTMOD	CLSRC4	CLSRC3	CLSRC2	CLSRC1	CLSRC0	CLPOL	CLMOD	FLTSRC4	FLTSRC3	FLTSRC2	FLTSRC1	FLTSRC0	FLTPOL	FLTMOD1	FLTMOD0	0000
PDC5	0CA6	PWM5 Generator Duty Cycle Register (PDC5<15:0>)																0000
PHASE5	0CA8	PWM5 Primary Phase-Shift or Independent Time Base Period Register (PHASE5<15:0>)																0000
DTR5	0CAA	—	—	PWM5 Dead-Time Register (DTR5<13:0>)														0000
ALTDTR5	0CAC	—	—	PWM5 Alternate Dead-Time Register (ALTDTR5<13:0>)														0000
SDC5	0CAE	PWM5 Secondary Duty Cycle Register (SDC5<15:0>)																0000
SPHASE5	0CB0	PWM5 Secondary Phase-Shift Register (SPHASE5<15:0>)																0000
TRIG5	0CB2	PWM5 Primary Trigger Compare Value Register (TRGCMP<12:0>)													—	—	—	0000
TRGCON5	0CB4	TRGDIV3	TRGDIV2	TRGDIV1	TRGDIV0	—	—	—	—	DTM	—	TRGSTRT5	TRGSTRT4	TRGSTRT3	TRGSTRT2	TRGSTRT1	TRGSTRT0	0000
STRIG5	0CB6	PWM5 Secondary Trigger Compare Value Register (STRGCMP<12:0>)													—	—	—	0000
PWMCAP5	0CB8	PWM5 Primary Time Base Capture Register (PWMCAP<12:0>)													—	—	—	0000
LEBCON5	0CBA	PHR	PHF	PLR	PLF	FLTLEBEN	CLLEBEN	—	—	—	—	BCH	BCL	BPHH	BPHL	BPLH	BPLL	0000
LEBDLY5	0CBC	—	—	—	—	PWM5 Leading-Edge Blanking Delay Register (LEB<8:0>)									—	—	—	0000
AUXCON5	0CBE	HRPDIS	HRDDIS	—	—	BLANKSEL3	BLANKSEL2	BLANKSEL1	BLANKSEL0	—	—	CHOPSEL3	CHOPSEL2	CHOPSEL1	CHOPSEL0	CHOPHEN	CHOPLEN	0000

Legend: — = unimplemented, read as '0'. Reset values are shown in hexadecimal.

© 2013-2015 Microchip Technology Inc.

TABLE 4-12: I2C1 AND I2C2 REGISTER MAP

SFR Name	Addr.	Bit 15	Bit 14	Bit 13	Bit 12	Bit 11	Bit 10	Bit 9	Bit 8	Bit 7	Bit 6	Bit 5	Bit 4	Bit 3	Bit 2	Bit 1	Bit 0	All Resets
I2C1CONL	0200	I2CEN	—	I2CSIDL	SCLREL	STRICT	A10M	DISSLW	SMEN	GCEN	STREN	ACKDT	ACKEN	RCEN	PEN	RSEN	SEN	1000
I2C1CONH	0202	—	—	—	—	—	—	—	—	—	PCIE	SCIE	BOEN	SDAHT	SBCDE	AHEN	DHEN	0000
I2C1STAT	0204	ACKSTAT	TRSTAT	ACKTIM	—	—	BCL	GCSTAT	ADD10	IWCOL	I2COV	D_A	P	S	R_W	RBF	TBF	0000
I2C1ADD	0206	—	—	—	—	—	—	I2C1 Address Register										0000
I2C1MSK	0208	—	—	—	—	—	—	I2C1 Slave Mode Address Mask Register										0000
I2C1BRG	020A	Baud Rate Generator Register																0000
I2C1TRN	020C	—	—	—	—	—	—	—	—	I2C1 Transmit Register								00FF
I2C1RCV	020E	—	—	—	—	—	—	—	—	I2C1 Receive Register								0000
I2C2CON1	0210	I2CEN	—	I2CSIDL	SCLREL	STRICT	A10M	DISSLW	SMEN	GCEN	STREN	ACKDT	ACKEN	RCEN	PEN	RSEN	SEN	1000
I2C2CON2	0212	—	—	—	—	—	—	—	—	—	PCIE	SCIE	BOEN	SDAHT	SBCDE	AHEN	DHEN	0000
I2C2STAT	0214	ACKSTAT	TRSTAT	ACKTIM	—	—	BCL	GCSTAT	ADD10	IWCOL	I2COV	D_A	P	S	R_W	RBF	TBF	0000
I2C2ADD	0216	—	—	—	—	—	—	I2C2 Address Register										0000
I2C2MSK	0218	—	—	—	—	—	—	I2C2 Slave Mode Address Mask Register										0000
I2C2BRG	021A	Baud Rate Generator Register																0000
I2C2TRN	021C	—	—	—	—	—	—	—	—	I2C2 Transmit Register								00FF
I2C2RCV	021E	—	—	—	—	—	—	—	—	I2C2 Receive Register								0000

Legend: — = unimplemented, read as '0'. Reset values are shown in hexadecimal.

TABLE 4-13: UART1 AND UART2 REGISTER MAP

SFR Name	Addr.	Bit 15	Bit 14	Bit 13	Bit 12	Bit 11	Bit 10	Bit 9	Bit 8	Bit 7	Bit 6	Bit 5	Bit 4	Bit 3	Bit 2	Bit 1	Bit 0	All Resets
U1MODE	0220	UARTEN	—	USIDL	IREN	RTSMD	—	UEN1	UEN0	WAKE	LPBACK	ABAUD	URXINV	BRGH	PDSEL1	PDSEL0	STSEL	0000
U1STA	0222	UTXISEL1	UTXINV	UTXISEL0	—	UTXBRK	UTXEN	UTXBF	TRMT	URXISEL1	URXISEL0	ADDEN	RIDLE	PERR	FERR	OERR	URXDA	0110
U1TXREG	0224	—	—	—	—	—	—	—	UART1 Transmit Register									xxxx
U1RXREG	0226	—	—	—	—	—	—	—	UART1 Receive Register									0000
U1BRG	0228	Baud Rate Generator Prescaler Register																0000
U2MODE	0230	UARTEN	—	USIDL	IREN	RTSMD	—	UEN1	UEN0	WAKE	LPBACK	ABAUD	URXINV	BRGH	PDSEL1	PDSEL0	STSEL	0000
U2STA	0232	UTXISEL1	UTXINV	UTXISEL0	—	UTXBRK	UTXEN	UTXBF	TRMT	URXISEL1	URXISEL0	ADDEN	RIDLE	PERR	FERR	OERR	URXDA	0110
U2TXREG	0234	—	—	—	—	—	—	—	UART2 Transmit Register									xxxx
U2RXREG	0236	—	—	—	—	—	—	—	UART2 Receive Register									0000
U2BRG	0238	Baud Rate Generator Prescaler Register																0000

Legend: x = unknown value on Reset; — = unimplemented, read as '0'. Reset values are shown in hexadecimal.

© 2013-2015 Microchip Technology Inc.

TABLE 4-14: SPI1 AND SPI2 REGISTER MAP

SFR Name	Addr.	Bit 15	Bit 14	Bit 13	Bit 12	Bit 11	Bit 10	Bit 9	Bit 8	Bit 7	Bit 6	Bit 5	Bit 4	Bit 3	Bit 2	Bit 1	Bit 0	All Resets
SPI1STAT	0240	SPIEN	—	SPISIDL	—	—	SPIBEC2	SPIBEC1	SPIBEC0	SRMPT	SPIROV	SRXMPT	SISEL2	SISEL1	SISEL0	SPITBF	SPIRBF	0000
SPI1CON1	0242	—	—	—	DISSCK	DISSDO	MODE16	SMP	CKE	SSEN	CKP	MSTEN	SPRE2	SPRE1	SPRE0	PPRE1	PPRE0	0000
SPI1CON2	0244	FRMEN	SPIFSD	FRMPOL	—	—	—	—	—	—	—	—	—	—	—	FRMDLY	SPIBEN	0000
SPI1BUF	0248	SPI1 Transmit and Receive Buffer Register																0000
SPI2STAT	0260	SPIEN	—	SPISIDL	—	—	SPIBEC2	SPIBEC1	SPIBEC0	SRMPT	SPIROV	SRXMPT	SISEL2	SISEL1	SISEL0	SPITBF	SPIRBF	0000
SPI2CON1	0262	—	—	—	DISSCK	DISSDO	MODE16	SMP	CKE	SSEN	CKP	MSTEN	SPRE2	SPRE1	SPRE0	PPRE1	PPRE0	0000
SPI2CON2	0264	FRMEN	SPIFSD	FRMPOL	—	—	—	—	—	—	—	—	—	—	—	FRMDLY	SPIBEN	0000
SPI2BUF	0268	SPI2 Transmit and Receive Buffer Register																0000

Legend: — = unimplemented, read as '0'. Reset values are shown in hexadecimal.

© 2013-2015 Microchip Technology Inc.

TABLE 4-15: ADC REGISTER MAP

SFR Name	Addr.	Bit 15	Bit 14	Bit 13	Bit 12	Bit 11	Bit 10	Bit 9	Bit 8	Bit 7	Bit 6	Bit 5	Bit 4	Bit 3	Bit 2	Bit 1	Bit 0	All Resets
ADCON1L	0300	ADON	—	ADSIDL	—	—	—	—	—	—	—	—	—	—	—	—	—	0000
ADCON1H	0302	—	—	—	—	—	—	—	—	FORM	SHRRES1	SHRRES0	—	—	—	—	—	0060
ADCON2L	0304	REFCIE	REFERCIE	—	EIEN	—	SHREISEL2	SHREISEL1	SHREISEL0	—	SHRADCS6	SHRADCS5	SHRADCS4	SHRADCS3	SHRADCS2	SHRADCS1	SHRADCS0	0000
ADCON2H	0306	REFRDY	REFERR	—	—	—	—	SHRSAMC9	SHRSAMC8	SHRSAMC7	SHRSAMC6	SHRSAMC5	SHRSAMC4	SHRSAMC3	SHRSAMC2	SHRSAMC1	SHRSAMC0	0000
ADCON3L	0308	REFSEL2	REFSEL1	REFSEL0	SUSPEND	SUSPCIE	SUSPRDY	SHRSAMP	CNVRTCH	SWLCTRG	SWCTRG	CNVCHSEL5	CNVCHSEL4	CNVCHSEL3	CNVCHSEL2	CNVCHSEL1	CNVCHSEL0	0000
ADCON3H	030A	CLKSEL1	CLKSEL0	CLKDIV5	CLKDIV4	CLKDIV3	CLKDIV2	CLKDIV1	CLKDIV0	SHREN	—	—	—	C3EN	C2EN	C1EN	C0EN	0000
ADCON4L	030C	—	—	—	—	SYNCTRG3	SYNCTRG2	SYNCTRG1	SYNCTRG0	—	—	—	—	SAMC3EN	SAMC2EN	SAMC1EN	SAMC0EN	0000
ADCON4H	030E	—	—	—	—	—	—	—	—	C3CHS1	C3CHS0	C2CHS1	C2CHS0	C1CHS1	C1CHS0	C0CHS1	C0CHS0	0000
ADMOD0L	0310	DIFF7	SIGN7	DIFF6	SIGN6	DIFF5	SIGN5	DIFF3	SIGN4	DIFF3	SIGN3	DIFF2	SIGN2	DIFF1	SIGN1	DIFF0	SIGN0	0000
ADMOD0H	0312	DIFF15(1)	SIGN15(1)	DIFF14(2)	SIGN14(2)	DIFF13(1)	SIGN13(1)	DIFF12(2)	SIGN12(2)	DIFF11(2)	SIGN11(2)	DIFF10(2)	SIGN10(2)	DIFF9(2)	SIGN9(2)	DIFF8(2)	SIGN8(2)	0000
ADMOD1L	0314	—	—	—	—	DIFF21	SIGN21	DIFF20	SIGN20	DIFF19	SIGN19	DIFF18	SIGN18	DIFF17(2)	SIGN17(2)	DIFF16(1)	SIGN16(1)	0000
ADIEL	0320	IE15(1)	IE14(2)	IE13(1)	IE12(2)	IE11(2)	IE10(2)	IE9(2)	IE8(2)	IE7	IE6	IE5	IE4	IE3	IE2	IE1	IE0	0000
ADIEH	0322	—	—	—	—	—	—	—	—	—	—	IE21	IE20	IE19	IE18	IE17(2)	IE16(1)	0000
ADSTATL	0330	AN15RDY(1)	AN14RDY(2)	AN13RDY(1)	AN12RDY(2)	AN11RDY(2)	AN10RDY(2)	AN9RDY(2)	AN8RDY(2)	AN7RDY	AN6RDY	AN5RDY	AN4RDY	AN3RDY	AN2RDY	AN1RDY	AN0RDY	0000
ADSTATH	0332	—	—	—	—	—	—	—	—	—	—	AN21RDY	AN20RDY	AN19RDY	AN18RDY	AN17RDY(2)	AN16RDY(1)	0000
ADCMP0ENL	0338	CMPEN15(1)	CMPEN14(2)	CMPEN13(1)	CMPEN12(2)	CMPEN11(2)	CMPEN10(2)	CMPEN9(2)	CMPEN8(2)	CMPEN7	CMPEN6	CMPEN5	CMPEN4	CMPEN3	CMPEN2	CMPEN1	CMPEN0	0000
ADCMP0ENH	033A	—	—	—	—	—	—	—	—	—	—	CMPEN21	CMPEN20	CMPEN19	CMPEN18	CMPEN17(2)	CMPEN16(1)	0000
ADCMP0LO	033C	ADC Comparator 0 Low Value Register																0000
ADCMP0HI	033E	ADC Comparator 0 High Value Register																0000
ADCMP1ENL	0340	CMPEN15(1)	CMPEN14(2)	CMPEN13(1)	CMPEN12(2)	CMPEN11(2)	CMPEN10(2)	CMPEN9(2)	CMPEN8(2)	CMPEN7	CMPEN6	CMPEN5	CMPEN4	CMPEN3	CMPEN2	CMPEN1	CMPEN0	0000
ADCMP1ENH	0342	—	—	—	—	—	—	—	—	—	—	CMPEN21	CMPEN20	CMPEN19	CMPEN18	CMPEN17(2)	CMPEN16(1)	0000
ADCMP1LO	0344	ADC Comparator 1 Low Value Register																0000
ADCMP1HI	0346	ADC Comparator 1 High Value Register																0000
ADFLDAT	0368	ADC Filter 0 Results Data Register																0000
ADFL1CON	036A	FLEN	MODE1	MODE0	OVRSAM2	OVRSAM1	OVRSAM0	IE	RDY	—	—	—	FLCHSEL4	FLCHSEL3	FLCHSEL2	FLCHSEL1	FLCHSEL0	0000
ADFL1DAT	0368	ADC Filter 1 Results Data Register																0000
ADFL0CON	036A	FLEN	MODE1	MODE0	OVRSAM2	OVRSAM1	OVRSAM0	IE	RDY	—	—	—	FLCHSEL4	FLCHSEL3	FLCHSEL2	FLCHSEL1	FLCHSEL0	0000
ADTRIG0L	0380	—	—	—	TRGSRC1<4:0>					—	—	—	TRGSRC0<4:0>					0000
ADTRIG0H	0382	—	—	—	TRGSRC3<4:0>					—	—	—	TRGSRC2<4:0>					0000
ADTRIG1L	0384	—	—	—	TRGSRC5<4:0>					—	—	—	TRGSRC4<4:0>					0000
ADTRIG1H	0386	—	—	—	TRGSRC7<4:0>					—	—	—	TRGSRC6<4:0>					0000
ADTRIG2L	0388	—	—	—	TRGSRC9<4:0>					—	—	—	TRGSRC8<4:0>					0000
ADTRIG2H	038A	—	—	—	TRGSRC11<4:0>					—	—	—	TRGSRC10<4:0>					0000
ADTRIG3L	038C	—	—	—	TRGSRC13<4:0>					—	—	—	TRGSRC12<4:0>					0000
ADTRIG3H	038E	—	—	—	TRGSRC15<4:0>					—	—	—	TRGSRC14<4:0>					0000
ADTRIG4L	0390	—	—	—	TRGSRC17<4:0>					—	—	—	TRGSRC16<4:0>					0000
ADTRIG4H	0392	—	—	—	TRGSRC19<4:0>					—	—	—	TRGSRC18<4:0>					0000
ADTRIG5L	0394	—	—	—	TRGSRC21<4:0>					—	—	—	TRGSRC20<4:0>					0000
ADCMP0CON	03A0	—	—	—	CHNL4	CHNL3	CHNL2	CHNL1	CHNL0	CMPEN	IE	STAT	BTWN	HIHI	HILO	LOHI	LOLO	0000
ADCMP1CON	03A4	—	—	—	CHNL4	CHNL3	CHNL2	CHNL1	CHNL0	CMPEN	IE	STAT	BTWN	HIHI	HILO	LOHI	LOLO	0000

Legend: — = unimplemented, read as '0'. Reset values are shown in hexadecimal.

Note 1: Implemented on dsPIC33EPXXGS506 devices only.

2: Implemented on dsPIC33EPXXGS504/505 and dsPIC33EPXXGS506 devices only.

© 2013-2015 Microchip Technology Inc.

TABLE 4-15: ADC REGISTER MAP (CONTINUED)

SFR Name	Addr.	Bit 15	Bit 14	Bit 13	Bit 12	Bit 11	Bit 10	Bit 9	Bit 8	Bit 7	Bit 6	Bit 5	Bit 4	Bit 3	Bit 2	Bit 1	Bit 0	All Resets
ADLVLTRGL	03D0	LVLEN15(1)	LVLEN14	LVLEN13(1)	LVLEN12(2)	LVLEN11(2)	LVLEN10(2)	LVLEN9(2)	LVLEN8(2)	LVLEN7	LVLEN6	LVLEN5	LVLEN4	LVLEN3	LVLEN2	LVLEN1	LVLEN0	0000
ADLVLTRGH	03D2	—	—	—	—	—	—	—	—	—	—	LVLEN21	LVLEN20	LVLEN19	LVLEN18	LVLEN17(2)	LVLEN16(1)	0000
ADCORE0L	03D4	—	—	—	—	—	—	SAMC<9:0>										0000
ADCORE0H	03D6	—	—	—	EISEL2	EISEL1	EISEL0	RES1	RES0	—	ADCS6	ADCS5	ADCS4	ADCS3	ADCS2	ADCS1	ADCS0	0000
ADCORE1L	03D8	—	—	—	—	—	—	SAMC<9:0>										0000
ADCORE1H	03DA	—	—	—	EISEL2	EISEL1	EISEL0	RES1	RES0	—	ADCS6	ADCS5	ADCS4	ADCS3	ADCS2	ADCS1	ADCS0	0000
ADCORE2L	03DC	—	—	—	—	—	—	SAMC<9:0>										0000
ADCORE2H	03DE	—	—	—	EISEL2	EISEL1	EISEL0	RES1	RES0	—	ADCS6	ADCS5	ADCS4	ADCS3	ADCS2	ADCS1	ADCS0	0000
ADCORE3L	03E0	—	—	—	—	—	—	SAMC<9:0>										0000
ADCORE3H	03E2	—	—	—	EISEL2	EISEL1	EISEL0	RES1	RES0	—	ADCS6	ADCS5	ADCS4	ADCS3	ADCS2	ADCS1	ADCS0	0000
ADEIEL	03F0	EIEN15(1)	EIEN14(2)	EIEN13(1)	EIEN12(2)	EIEN11(2)	EIEN10(2)	EIEN9(2)	EIEN8(2)	EIEN7	EIEN6	EIEN5	EIEN4	EIEN3	EIEN2	EIEN1	EIEN0	0000
ADEIEH	03F2	—	—	—	—	—	—	—	—	—	—	EIEN21	EIEN20	EIEN19	EIEN18	EIEN17(2)	EIEN16(1)	0000
ADEISTATL	03F8	EISTAT15(1)	EISTAT14(2)	EISTAT13(1)	EISTAT12(2)	EISTAT11(2)	EISTAT10(2)	EISTAT9(2)	EISTAT8(2)	EISTAT7	EISTAT6	EISTAT5	EISTAT4	EISTAT3	EISTAT2	EISTAT1	EISTAT0	0000
ADEISTATH	03FA	—	—	—	—	—	—	—	—	—	—	EISTAT21	EISTAT20	EISTAT19	EISTAT18	EISTAT17(2)	EISTAT16(1)	0000
ADCON5L	0400	SHRRDY	—	—	—	C3RDY	C2RDY	C1RDY	C0RDY	SHRPWR	—	—	—	C3PWR	C2PWR	C1PWR	C0PWR	0000
ADCON5H	0402	—	—	—	—	WARMTIME3	WARMTIME2	WARMTIME1	WARMTIME0	SHRCIE	—	—	—	C3CIE	C2CIE	C1CIE	C0CIE	0000
ADCAL0L	0404	CAL1RDY	—	—	—	CAL1SKIP	CAL1DIFF	CAL1EN	CAL1RUN	CAL0RDY	—	—	—	CAL0SKIP	CAL0DIFF	CAL0EN	CAL0RUN	0000
ADCAL0H	0406	CAL3RDY	—	—	—	CAL3SKIP	CAL3DIFF	CAL3EN	CAL3RUN	CAL2RDY	—	—	—	CAL2SKIP	CAL2DIFF	CAL2EN	CAL2RUN	0000
ADCAL1H	040A	CSHRRDY	—	—	—	CSHRSKIP	CSHRDIFF	CSHREN	CSHRRUN	—	—	—	—	—	—	—	—	0000
ADCBUF0	040C	ADC Data Buffer 0																0000
ADCBUF1	040E	ADC Data Buffer 1																0000
ADCBUF2	0410	ADC Data Buffer 2																0000
ADCBUF3	0412	ADC Data Buffer 3																0000
ADCBUF4	0414	ADC Data Buffer 4																0000
ADCBUF5	0416	ADC Data Buffer 5																0000
ADCBUF6	041B	ADC Data Buffer 6																0000
ADCBUF7	041A	ADC Data Buffer 7																0000
ADCBUF8	041C	ADC Data Buffer 8																0000
ADCBUF9	041E	ADC Data Buffer 9																0000
ADCBUF10	0420	ADC Data Buffer 10																0000
ADCBUF11	0422	ADC Data Buffer 11																0000
ADCBUF12	0424	ADC Data Buffer 12																0000
ADCBUF13	0426	ADC Data Buffer 13																0000
ADCBUF14	0428	ADC Data Buffer 14																0000
ADCBUF15	042A	ADC Data Buffer 15																0000
ADCBUF16	042C	ADC Data Buffer 16																0000
ADCBUF17	042E	ADC Data Buffer 17																0000
ADCBUF18	0430	ADC Data Buffer 18																0000
ADCBUF19	0432	ADC Data Buffer 19																0000
ADCBUF20	0434	ADC Data Buffer 20																0000
ADCBUF21	0436	ADC Data Buffer 21																0000

Legend: — = unimplemented, read as '0'. Reset values are shown in hexadecimal.

Note 1: Implemented on dsPIC33EPXXGS506 devices only.

2: Implemented on dsPIC33EPXXGS504/505 and dsPIC33EPXXGS506 devices only.

© 2013-2015 Microchip Technology Inc.

TABLE 4-16: PERIPHERAL PIN SELECT OUTPUT REGISTER MAP FOR dsPIC33EPXXGS502 DEVICES

SFR Name	Addr.	Bit 15	Bit 14	Bit 13	Bit 12	Bit 11	Bit 10	Bit 9	Bit 8	Bit 7	Bit 6	Bit 5	Bit 4	Bit 3	Bit 2	Bit 1	Bit 0	All Resets
RPOR0	0670	—	—	RP33R5	RP33R4	RP33R3	RP33R2	RP33R1	RP33R0	—	—	RP32R5	RP32R4	RP32R3	RP32R2	RP32R1	RP32R0	0000
RPOR1	0672	—	—	RP35R5	RP35R4	RP35R3	RP35R2	RP35R1	RP35R0	—	—	RP34R5	RP34R4	RP34R3	RP34R2	RP34R1	RP34R0	0000
RPOR2	0674	—	—	RP37R5	RP37R4	RP37R3	RP37R2	RP37R1	RP37R0	—	—	RP36R5	RP36R4	RP36R3	RP36R2	RP36R1	RP36R0	0000
RPOR3	0676	—	—	RP39R5	RP39R4	RP39R3	RP39R2	RP39R1	RP39R0	—	—	RP38R5	RP38R4	RP38R3	RP38R2	RP38R1	RP38R0	0000
RPOR4	0678	—	—	RP41R5	RP41R4	RP41R3	RP41R2	RP41R1	RP41R0	—	—	RP40R5	RP40R4	RP40R3	RP40R2	RP40R1	RP40R0	0000
RPOR5	067A	—	—	RP43R5	RP43R4	RP43R3	RP43R2	RP43R1	RP43R0	—	—	RP42R5	RP42R4	RP42R3	RP42R2	RP42R1	RP42R0	0000
RPOR6	067C	—	—	RP45R5	RP45R4	RP45R3	RP45R2	RP45R1	RP45R0	—	—	RP44R5	RP44R4	RP44R3	RP44R2	RP44R1	RP44R0	0000
RPOR7	067E	—	—	RP47R5	RP47R4	RP47R3	RP47R2	RP47R1	RP47R0	—	—	RP46R5	RP46R4	RP46R3	RP46R2	RP46R1	RP46R0	0000
RPOR16	0690	—	—	RP177R5	RP177R4	RP177R3	RP177R2	RP177R1	RP177R0	—	—	RP176R5	RP176R4	RP176R3	RP176R2	RP176R1	RP176R0	0000
RPOR17	0692	—	—	RP179R5	RP179R4	RP179R3	RP179R2	RP179R1	RP179R0	—	—	RP178R5	RP178R4	RP178R3	RP178R2	RP178R1	RP178R0	0000
RPOR18	0694	—	—	RP181R5	RP181R4	RP181R3	RP181R2	RP181R1	RP181R0	—	—	RP180R5	RP180R4	RP180R3	RP180R2	RP180R1	RP180R0	0000

Legend: — = unimplemented, read as '0'. Reset values are shown in hexadecimal.

TABLE 4-17: PERIPHERAL PIN SELECT OUTPUT REGISTER MAP FOR dsPIC33EPXXGS504/505 DEVICES

SFR Name	Addr.	Bit 15	Bit 14	Bit 13	Bit 12	Bit 11	Bit 10	Bit 9	Bit 8	Bit 7	Bit 6	Bit 5	Bit 4	Bit 3	Bit 2	Bit 1	Bit 0	All Resets
RPOR0	0670	—	—	RP33R5	RP33R4	RP33R3	RP33R2	RP33R1	RP33R0	—	—	RP32R5	RP32R4	RP32R3	RP32R2	RP32R1	RP32R0	0000
RPOR1	0672	—	—	RP35R5	RP35R4	RP35R3	RP35R2	RP35R1	RP35R0	—	—	RP34R5	RP34R4	RP34R3	RP34R2	RP34R1	RP34R0	0000
RPOR2	0674	—	—	RP37R5	RP37R4	RP37R3	RP37R2	RP37R1	RP37R0	—	—	RP36R5	RP36R4	RP36R3	RP36R2	RP36R1	RP36R0	0000
RPOR3	0676	—	—	RP39R5	RP39R4	RP39R3	RP39R2	RP39R1	RP39R0	—	—	RP38R5	RP38R4	RP38R3	RP38R2	RP38R1	RP38R0	0000
RPOR4	0678	—	—	RP41R5	RP41R4	RP41R3	RP41R2	RP41R1	RP41R0	—	—	RP40R5	RP40R4	RP40R3	RP40R2	RP40R1	RP40R0	0000
RPOR5	067A	—	—	RP43R5	RP43R4	RP43R3	RP43R2	RP43R1	RP43R0	—	—	RP42R5	RP42R4	RP42R3	RP42R2	RP42R1	RP42R0	0000
RPOR6	067C	—	—	RP45R5	RP45R4	RP45R3	RP45R2	RP45R1	RP45R0	—	—	RP44R5	RP44R4	RP44R3	RP44R2	RP44R1	RP44R0	0000
RPOR7	067E	—	—	RP47R5	RP47R4	RP47R3	RP47R2	RP47R1	RP47R0	—	—	RP46R5	RP46R4	RP46R3	RP46R2	RP46R1	RP46R0	0000
RPOR8	0680	—	—	RP49R5	RP49R4	RP49R3	RP49R2	RP49R1	RP49R0	—	—	RP48R5	RP48R4	RP48R3	RP48R2	RP48R1	RP48R0	0000
RPOR9	0682	—	—	RP51R5	RP51R4	RP51R3	RP51R2	RP51R1	RP51R0	—	—	RP50R5	RP50R4	RP50R3	RP50R2	RP50R1	RP50R0	0000
RPOR10	0684	—	—	RP53R5	RP53R4	RP53R3	RP53R2	RP53R1	RP53R0	—	—	RP52R5	RP52R4	RP52R3	RP52R2	RP52R1	RP52R0	0000
RPOR11	0686	—	—	RP55R5	RP55R4	RP55R3	RP55R2	RP55R1	RP55R0	—	—	RP54R5	RP54R4	RP54R3	RP54R2	RP54R1	RP54R0	0000
RPOR12	0688	—	—	RP57R5	RP57R4	RP57R3	RP57R2	RP57R1	RP57R0	—	—	RP56R5	RP56R4	RP56R3	RP56R2	RP56R1	RP56R0	0000
RPOR13	068A	—	—	RP59R5	RP59R4	RP59R3	RP59R2	RP59R1	RP59R0	—	—	RP58R5	RP58R4	RP58R3	RP58R2	RP58R1	RP58R0	0000
RPOR14	068C	—	—	RP61R5	RP61R4	RP61R3	RP61R2	RP61R1	RP61R0	—	—	RP60R5	RP60R4	RP60R3	RP60R2	RP60R1	RP60R0	0000
RPOR16	0690	—	—	RP177R5	RP177R4	RP177R3	RP177R2	RP177R1	RP177R0	—	—	RP176R5	RP176R4	RP176R3	RP176R2	RP176R1	RP176R0	0000
RPOR17	0692	—	—	RP179R5	RP179R4	RP179R3	RP179R2	RP179R1	RP179R0	—	—	RP178R5	RP178R4	RP178R3	RP178R2	RP178R1	RP178R0	0000
RPOR18	0694	—	—	RP181R5	RP181R4	RP181R3	RP181R2	RP181R1	RP181R0	—	—	RP180R5	RP180R4	RP180R3	RP180R2	RP180R1	RP180R0	0000

Legend: — = unimplemented, read as '0'. Reset values are shown in hexadecimal.

© 2013-2015 Microchip Technology Inc.

TABLE 4-18: PERIPHERAL PIN SELECT OUTPUT REGISTER MAP FOR dsPIC33EPXXGS506 DEVICES

SFR Name	Addr.	Bit 15	Bit 14	Bit 13	Bit 12	Bit 11	Bit 10	Bit 9	Bit 8	Bit 7	Bit 6	Bit 5	Bit 4	Bit 3	Bit 2	Bit 1	Bit 0	All Resets
RPOR0	0670	—	—	RP33R5	RP33R4	RP33R3	RP33R2	RP33R1	RP33R0	—	—	RP32R5	RP32R4	RP32R3	RP32R2	RP32R1	RP32R0	0000
RPOR1	0672	—	—	RP35R5	RP35R4	RP35R3	RP35R2	RP35R1	RP35R0	—	—	RP34R5	RP34R4	RP34R3	RP34R2	RP34R1	RP34R0	0000
RPOR2	0674	—	—	RP37R5	RP37R4	RP37R3	RP37R2	RP37R1	RP37R0	—	—	RP36R5	RP36R4	RP36R3	RP36R2	RP36R1	RP36R0	0000
RPOR3	0676	—	—	RP39R5	RP39R4	RP39R3	RP39R2	RP39R1	RP39R0	—	—	RP38R5	RP38R4	RP38R3	RP38R2	RP38R1	RP38R0	0000
RPOR4	0678	—	—	RP41R5	RP41R4	RP41R3	RP41R2	RP41R1	RP41R0	—	—	RP40R5	RP40R4	RP40R3	RP40R2	RP40R1	RP40R0	0000
RPOR5	067A	—	—	RP43R5	RP43R4	RP43R3	RP43R2	RP43R1	RP43R0	—	—	RP42R5	RP42R4	RP42R3	RP42R2	RP42R1	RP42R0	0000
RPOR6	067C	—	—	RP45R5	RP45R4	RP45R3	RP45R2	RP45R1	RP45R0	—	—	RP44R5	RP44R4	RP44R3	RP44R2	RP44R1	RP44R0	0000
RPOR7	067E	—	—	RP47R5	RP47R4	RP47R3	RP47R2	RP47R1	RP47R0	—	—	RP46R5	RP46R4	RP46R3	RP46R2	RP46R1	RP46R0	0000
RPOR8	0680	—	—	RP49R5	RP49R4	RP49R3	RP49R2	RP49R1	RP49R0	—	—	RP48R5	RP48R4	RP48R3	RP48R2	RP48R1	RP48R0	0000
RPOR9	0682	—	—	RP51R5	RP51R4	RP51R3	RP51R2	RP51R1	RP51R0	—	—	RP50R5	RP50R4	RP50R3	RP50R2	RP50R1	RP50R0	0000
RPOR10	0684	—	—	RP53R5	RP53R4	RP53R3	RP53R2	RP53R1	RP53R0	—	—	RP52R5	RP52R4	RP52R3	RP52R2	RP52R1	RP52R0	0000
RPOR11	0686	—	—	RP55R5	RP55R4	RP55R3	RP55R2	RP55R1	RP55R0	—	—	RP54R5	RP54R4	RP54R3	RP54R2	RP54R1	RP54R0	0000
RPOR12	0688	—	—	RP57R5	RP57R4	RP57R3	RP57R2	RP57R1	RP57R0	—	—	RP56R5	RP56R4	RP56R3	RP56R2	RP56R1	RP56R0	0000
RPOR13	068A	—	—	RP59R5	RP59R4	RP59R3	RP59R2	RP59R1	RP59R0	—	—	RP58R5	RP58R4	RP58R3	RP58R2	RP58R1	RP58R0	0000
RPOR14	068C	—	—	RP61R5	RP61R4	RP61R3	RP61R2	RP61R1	RP61R0	—	—	RP60R5	RP60R4	RP60R3	RP60R2	RP60R1	RP60R0	0000
RPOR15	068E	—	—	RP63R5	RP63R4	RP63R3	RP63R2	RP63R1	RP63R0	—	—	RP62R5	RP62R4	RP62R3	RP62R2	RP62R1	RP62R0	0000
RPOR16	0690	—	—	RP177R5	RP177R4	RP177R3	RP177R2	RP177R1	RP177R0	—	—	RP176R5	RP176R4	RP176R3	RP176R2	RP176R1	RP176R0	0000
RPOR17	0692	—	—	RP179R5	RP179R4	RP179R3	RP179R2	RP179R1	RP179R0	—	—	RP178R5	RP178R4	RP178R3	RP178R2	RP178R1	RP178R0	0000
RPOR18	0694	—	—	RP181R5	RP181R4	RP181R3	RP181R2	RP181R1	RP181R0	—	—	RP180R5	RP180R4	RP180R3	RP180R2	RP180R1	RP180R0	0000

Legend: — = unimplemented, read as '0'. Reset values are shown in hexadecimal.

© 2013-2015 Microchip Technology Inc.

TABLE 4-19: PERIPHERAL PIN SELECT INPUT REGISTER MAP

SFR Name	Addr.	Bit 15	Bit 14	Bit 13	Bit 12	Bit 11	Bit 10	Bit 9	Bit 8	Bit 7	Bit 6	Bit 5	Bit 4	Bit 3	Bit 2	Bit 1	Bit 0	All Resets
RPINR0	06A0	INT1R<7:0>								—	—	—	—	—	—	—	—	0000
RPINR1	06A2	—	—	—	—	—	—	—	—	INT2R<7:0>								0000
RPINR2	06A4	T1CKR<7:0>								—	—	—	—	—	—	—	—	0000
RPINR3	06A6	T3CKR7	T3CKR6	T3CKR5	T3CKR4	T3CKR3	T3CKR2	T3CKR1	T3CKR0	T2CKR7	T2CKR6	T2CKR5	T2CKR4	T2CKR3	T2CKR2	T2CKR1	T2CKR0	0000
RPINR7	06AE	IC2R7	IC2R6	IC2R5	IC2R4	IC2R3	IC2R2	IC2R1	IC2R0	IC1R7	IC1R6	IC1R5	IC1R4	IC1R3	IC1R2	IC1R1	IC1R0	0000
RPINR8	06B0	IC4R7	IC4R6	IC4R5	IC4R4	IC4R3	IC4R2	IC4R1	IC4R0	IC3R7	IC3R6	IC3R5	IC3R4	IC3R3	IC3R2	IC3R1	IC3R0	0000
RPINR11	06B6	—	—	—	—	—	—	—	—	OCFAR<7:0>								0000
RPINR12	06B8	FLT2R7	FLT2R6	FLT2R5	FLT2R4	FLT2R3	FLT2R2	FLT2R1	FLT2R0	FLT1R7	FLT1R6	FLT1R5	FLT1R4	FLT1R3	FLT1R2	FLT1R1	FLT1R0	0000
RPINR13	06BA	FLT4R7	FLT4R6	FLT4R5	FLT4R4	FLT4R3	FLT4R2	FLT4R1	FLT4R0	FLT3R7	FLT3R6	FLT3R5	FLT3R4	FLT3R3	FLT3R2	FLT3R1	FLT3R0	0000
RPINR18	06C4	U1CTSR7	U1CTSR6	U1CTSR5	U1CTSR4	U1CTSR3	U1CTSR2	U1CTSR1	U1CTS0	U1RXR7	U1RXR6	U1RXR5	U1RXR4	U1RXR3	U1RXR2	U1RXR1	U1RXR0	0000
RPINR19	06C6	U2CTSR7	U2CTSR6	U2CTSR5	U2CTSR4	U2CTSR3	U2CTSR2	U2CTSR1	U2CTSR0	U2RXR7	U2RXR6	U2RXR5	U2RXR4	U2RXR3	U2RXR2	U2RXR1	U2RXR0	0000
RPINR20	06C8	SCK1INR7	SCK1INR6	SCK1INR5	SCK1INR4	SCK1INR3	SCK1INR2	SCK1INR1	SCK1INR0	SDI1R7	SDI1R6	SDI1R5	SDI1R4	SDI1R3	SDI1R2	SDI1R1	SDI1R0	0000
RPINR21	06CA	—	—	—	—	—	—	—	—	SS1R<7:0>								0000
RPINR22	06CC	SCK2INR7	SCK2INR6	SCK2INR5	SCK2INR4	SCK2INR3	SCK2INR2	SCK2INR1	SCK2INR0	SDI2R7	SDI2R6	SDI2R5	SDI2R4	SDI2R3	SDI2R2	SDI2R1	SDI2R0	0000
RPINR23	06CE	—	—	—	—	—	—	—	—	SS2R<7:0>								0000
RPINR37	06EA	SYNCI1R<7:0>								—	—	—	—	—	—	—	—	0000
RPINR38	06EC	—	—	—	—	—	—	—	—	SYNCI2R<7:0>								0000
RPINR42	06F4	FLT6R7	FLT6R6	FLT6R5	FLT6R4	FLT6R3	FLT6R2	FLT6R1	FLT6R0	FLT5R7	FLT5R6	FLT5R5	FLT5R4	FLT5R3	FLT5R2	FLT5R1	FLT5R0	0000
RPINR43	06F6	FLT8R7	FLT8R6	FLT8R5	FLT8R4	FLT8R3	FLT8R2	FLT8R1	FLT8R0	FLT7R7	FLT7R6	FLT7R5	FLT7R4	FLT7R3	FLT7R2	FLT7R1	FLT7R0	0000

Legend: — = unimplemented, read as '0'. Reset values are shown in hexadecimal.

© 2013-2015 Microchip Technology Inc.

TABLE 4-20: NVM REGISTER MAP

SFR Name	Addr.	Bit 15	Bit 14	Bit 13	Bit 12	Bit 11	Bit 10	Bit 9	Bit 8	Bit 7	Bit 6	Bit 5	Bit 4	Bit 3	Bit 2	Bit 1	Bit 0	All Resets
NVMCON	0728	WR	WREN	WRERR	NVMSIDL	SFTSWP	P2ACTIV	RPDF	URERR	—	—	—	—	NVMOP3	NVMOP2	NVMOP1	NVMOP0	0000
NVMADR	072A	NVMADR<15:0>																0000
NVMADRU	072C	—	—	—	—	—	—	—	—	NVMADR<23:16>								0000
NVMKEY	072E	—	—	—	—	—	—	—	—	NVMKEY<7:0>								0000
NVMSRCADR	0730	NVM Source Data Address Register, Lower Byte (NVMSRCADR<15:0>)																0000
NVMSRCADRH	0732	—	—	—	—	—	—	—	—	NVM Source Data Address Register, Upper Byte (NVMSRCADR<23:16>								0000

Legend: — = unimplemented, read as '0'. Reset values are shown in hexadecimal.

TABLE 4-21: SYSTEM CONTROL REGISTER MAP

SFR Name	Addr.	Bit 15	Bit 14	Bit 13	Bit 12	Bit 11	Bit 10	Bit 9	Bit 8	Bit 7	Bit 6	Bit 5	Bit 4	Bit 3	Bit 2	Bit 1	Bit 0	All Resets
RCON	0740	TRAPR	IOPUWR	—	—	VREGSF	—	CM	VREGS	EXTR	SWR	SWDTEN	WDTO	SLEEP	IDLE	BOR	POR	Note 1
OSCCON	0742	—	COSC2	COSC1	COSC0	—	NOSC2	NOSC1	NOSC0	CLKLOCK	IOLOCK	LOCK	—	CF	—	—	OSWEN	Note 2
CLKDIV	0744	ROI	DOZE2	DOZE1	DOZE0	DOZEN	FRCDIV2	FRCDIV1	FRCDIV0	PLLPOST1	PLLPOST0	—	PLLPRE4	PLLPRE3	PLLPRE2	PLLPRE1	PLLPRE0	3040
PLLFBD	0746	—	—	—	—	—	—	—	PLLDIV<8:0>									0030
OSCTUN	0748	—	—	—	—	—	—	—	—	—	—	TUN<5:0>						0000
LFSR	074C	—	LFSR<14:0>															0000
REFOCON	074E	ROON	—	ROSSLP	ROSEL	RODIV3	RODIV2	RODIV1	RODIV0	—	—	—	—	—	—	—	—	0000
ACLKCON	0750	ENAPLL	APLLCK	SELACLK	—	—	APSTSCLR2	APSTSCLR1	APSTSCLR0	ASRCSEL	FRCSEL	—	—	—	—	—	—	2740

Legend: — = unimplemented, read as '0'. Reset values are shown in hexadecimal.

Note 1: RCON register Reset values are dependent on the type of Reset.

2: OSCCON register Reset values are dependent on the Configuration fuses.

© 2013-2015 Microchip Technology Inc.

TABLE 4-22: PMD REGISTER MAP

SFR Name	Addr.	Bit 15	Bit 14	Bit 13	Bit 12	Bit 11	Bit 10	Bit 9	Bit 8	Bit 7	Bit 6	Bit 5	Bit 4	Bit 3	Bit 2	Bit 1	Bit 0	All Resets
PMD1	0760	T5MD	T4MD	T3MD	T2MD	T1MD	—	PWMMD	—	I2C1MD	U2MD	U1MD	SPI2MD	SPI1MD	—	—	ADCMD	0000
PMD2	0762	—	—	—	—	IC4MD	IC3MD	IC2MD	IC1MD	—	—	—	—	OC4MD	OC3MD	OC2MD	OC1MD	0000
PMD3	0764	—	—	—	—	—	CMPMD	—	—	—	—	—	—	—	—	I2C2MD	—	0000
PMD4	0766	—	—	—	—	—	—	—	—	—	—	—	—	REFOMD	—	—	—	0000
PMD6	076A	—	—	—	PWM5MD	PWM4MD	PWM3MD	PWM2MD	PWM1MD	—	—	—	—	—	—	—	—	0000
PMD7	076C	—	—	—	—	CMP4MD	CMP3MD	CMP2MD	CMP1MD	—	—	—	—	—	—	PGA1MD	—	0000
PMD8	076E	—	—	—	—	—	PGA2MD	ABGMD	—	—	—	—	—	—	—	CCSMD	—	0000

Legend: — = unimplemented, read as '0'. Reset values are shown in hexadecimal.

TABLE 4-23: CONSTANT-CURRENT SOURCE REGISTER MAP

SFR Name	Addr.	Bit 15	Bit 14	Bit 13	Bit 12	Bit 11	Bit 10	Bit 9	Bit 8	Bit 7	Bit 6	Bit 5	Bit 4	Bit 3	Bit 2	Bit 1	Bit 0	All Resets
ISRCCON	0500	ISRCEN	—	—	—	—	OUTSEL2	OUTSEL1	OUTSEL0	—	—	ISRCCAL5	ISRCCAL4	ISRCCAL3	ISRCCAL2	ISRCCAL1	ISRCCAL0	0000

Legend: — = unimplemented, read as '0'. Reset values are shown in hexadecimal.

TABLE 4-24: PROGRAMMABLE GAIN AMPLIFIER REGISTER MAP

SFR Name	Addr.	Bit 15	Bit 14	Bit 13	Bit 12	Bit 11	Bit 10	Bit 9	Bit 8	Bit 7	Bit 6	Bit 5	Bit 4	Bit 3	Bit 2	Bit 1	Bit 0	All Resets
PGA1CON	0504	PGAEN	PGAOEN	SELPI2	SELPI1	SELPI0	SELNI2	SELNI1	SELNI0	—	—	—	—	—	GAIN2	GAIN1	GAIN0	0000
PGA1CAL	0506	—	—	—	—	—	—	—	—	—	—	PGACAL<5:0>						0000
PGA2CON	0508	PGAEN	PGAOEN	SELPI2	SELPI1	SELPI0	SELNI2	SELNI1	SELNI0	—	—	—	—	—	GAIN2	GAIN1	GAIN0	0000
PGA2CAL	050A	—	—	—	—	—	—	—	—	—	—	PGACAL<5:0>						0000

Legend: — = unimplemented, read as '0'. Reset values are shown in hexadecimal.

© 2013-2015 Microchip Technology Inc.

TABLE 4-25: ANALOG COMPARATOR REGISTER MAP

SFR Name	Addr.	Bit 15	Bit 14	Bit 13	Bit 12	Bit 11	Bit 10	Bit 9	Bit 8	Bit 7	Bit 6	Bit 5	Bit 4	Bit 3	Bit 2	Bit 1	Bit 0	All Resets
CMP1CON	0540	CMPON	—	CMPSIDL	HYSSEL1	HYSSEL0	FLTREN	FCLKSEL	DACOE	INSEL1	INSEL0	EXTREF	HYSPOL	CMPSTAT	ALTINP	CMPPOL	RANGE	0000
CMP1DAC	0542	—	—	—	—	CMREF<11:0>												0000
CMP2CON	0544	CMPON	—	CMPSIDL	HYSSEL1	HYSSEL0	FLTREN	FCLKSEL	DACOE	INSEL1	INSEL0	EXTREF	HYSPOL	CMPSTAT	ALTINP	CMPPOL	RANGE	0000
CMP2DAC	0546	—	—	—	—	CMREF<11:0>												0000
CMP3CON	0548	CMPON	—	CMPSIDL	HYSSEL1	HYSSEL0	FLTREN	FCLKSEL	DACOE	INSEL1	INSEL0	EXTREF	HYSPOL	CMPSTAT	ALTINP	CMPPOL	RANGE	0000
CMP3DAC	054A	—	—	—	—	CMREF<11:0>												0000
CMP4CON	054C	CMPON	—	CMPSIDL	HYSSEL1	HYSSEL0	FLTREN	FCLKSEL	DACOE	INSEL1	INSEL0	EXTREF	HYSPOL	CMPSTAT	ALTINP	CMPPOL	RANGE	0000
CMP4DAC	054E	—	—	—	—	CMREF<11:0>												0000

Legend: — = unimplemented, read as '0'. Reset values are shown in hexadecimal.

TABLE 4-26: JTAG INTERFACE REGISTER MAP

SFR Name	Addr	Bit 15	Bit 14	Bit 13	Bit 12	Bit 11	Bit 10	Bit 9	Bit 8	Bit 7	Bit 6	Bit 5	Bit 4	Bit 3	Bit 2	Bit 1	Bit 0	All Resets
JDATAH	0FF0	—	—	—	—	JDATAH<11:0>												xxxx
JDATAL	0FF2	JDATAL<15:0>																0000

Legend: x = unknown value on Reset; — = unimplemented, read as '0'. Reset values are shown in hexadecimal.

© 2013-2015 Microchip Technology Inc.

TABLE 4-27: PORTA REGISTER MAP FOR dsPIC33EPXXGS502 DEVICES

SFR Name	Addr.	Bit 15	Bit 14	Bit 13	Bit 12	Bit 11	Bit 10	Bit 9	Bit 8	Bit 7	Bit 6	Bit 5	Bit 4	Bit 3	Bit 2	Bit 1	Bit 0	All Resets
TRISA	0E00	—	—	—	—	—	—	—	—	—	—	—	TRISA<4:0>					001F
PORTA	0E02	—	—	—	—	—	—	—	—	—	—	—	RA<4:0>					0000
LATA	0E04	—	—	—	—	—	—	—	—	—	—	—	LATA<4:0>					0000
ODCA	0E06	—	—	—	—	—	—	—	—	—	—	—	ODCA<4:0>					0000
CNENA	0E08	—	—	—	—	—	—	—	—	—	—	—	CNIEA<4:0>					0000
CNPUA	0E0A	—	—	—	—	—	—	—	—	—	—	—	CNPUA<4:0>					0000
CNPDA	0E0C	—	—	—	—	—	—	—	—	—	—	—	CNPDA<4:0>					0000
ANSELA	0E0E	—	—	—	—	—	—	—	—	—	—	—	—	—	ANSA<2:0>			0007

Legend: — = unimplemented, read as '0'. Reset values are shown in hexadecimal.

TABLE 4-28: PORTB REGISTER MAP FOR dsPIC33EPXXGS502 DEVICES

SFR Name	Addr.	Bit 15	Bit 14	Bit 13	Bit 12	Bit 11	Bit 10	Bit 9	Bit 8	Bit 7	Bit 6	Bit 5	Bit 4	Bit 3	Bit 2	Bit 1	Bit 0	All Resets
TRISB	0E10	TRISB<15:0>																FFFF
PORTB	0E12	RB<15:0>																xxxx
LATB	0E14	LATB<15:0>																xxxx
ODCB	0E16	ODCB<15:0>																0000
CNENB	0E18	CNIEB<15:0>																0000
CNPUB	0E1A	CNPUB<15:0>																0000
CNPDB	0E1C	CNPDB<15:0>																0000
ANSELB	0E1E	—	—	—	—	—	ANSB<10:9>		—	ANSB<7:0>								06FF

Legend: x = unknown value on Reset; — = unimplemented, read as '0'. Reset values are shown in hexadecimal.

© 2013-2015 Microchip Technology Inc.

TABLE 4-29: PORTA REGISTER MAP FOR dsPIC33EPXXGS504/505 DEVICES

SFR Name	Addr.	Bit 15	Bit 14	Bit 13	Bit 12	Bit 11	Bit 10	Bit 9	Bit 8	Bit 7	Bit 6	Bit 5	Bit 4	Bit 3	Bit 2	Bit 1	Bit 0	All Resets
TRISA	0E00	—	—	—	—	—	—	—	—	—	—	—	TRISA<4:0>					001F
PORTA	0E02	—	—	—	—	—	—	—	—	—	—	—	RA<4:0>					0000
LATA	0E04	—	—	—	—	—	—	—	—	—	—	—	LATA<4:0>					0000
ODCA	0E06	—	—	—	—	—	—	—	—	—	—	—	ODCA<4:0>					0000
CNENA	0E08	—	—	—	—	—	—	—	—	—	—	—	CNIEA<4:0>					0000
CNPUA	0E0A	—	—	—	—	—	—	—	—	—	—	—	CNPUA<4:0>					0000
CNPDA	0E0C	—	—	—	—	—	—	—	—	—	—	—	CNPDA<4:0>					0000
ANSELA	0E0E	—	—	—	—	—	—	—	—	—	—	—	—	—	ANSA<2:0>			0007

Legend: — = unimplemented, read as '0'. Reset values are shown in hexadecimal.

TABLE 4-30: PORTB REGISTER MAP FOR dsPIC33EPXXGS504/505 DEVICES

SFR Name	Addr.	Bit 15	Bit 14	Bit 13	Bit 12	Bit 11	Bit 10	Bit 9	Bit 8	Bit 7	Bit 6	Bit 5	Bit 4	Bit 3	Bit 2	Bit 1	Bit 0	All Resets
TRISB	0E10	TRISB<15:0>																FFFF
PORTB	0E12	RB<15:0>																xxxx
LATB	0E14	LATB<15:0>																xxxx
ODCB	0E16	ODCB<15:0>																0000
CNENB	0E18	CNIEB<15:0>																0000
CNPUB	0E1A	CNPUB<15:0>																0000
CNPDB	0E1C	CNPDB<15:0>																0000
ANSELB	0E1E	—	—	—	—	—	ANSB<10:9>		—	ANSB<7:5>			—	ANSB<3:0>				06EF

Legend: x = unknown value on Reset; — = unimplemented, read as '0'. Reset values are shown in hexadecimal.

TABLE 4-31: PORTC REGISTER MAP FOR dsPIC33EPXXGS504/505 DEVICES

SFR Name	Addr.	Bit 15	Bit 14	Bit 13	Bit 12	Bit 11	Bit 10	Bit 9	Bit 8	Bit 7	Bit 6	Bit 5	Bit 4	Bit 3	Bit 2	Bit 1	Bit 0	All Resets
TRISC	0E20	—	—	TRISC<13:0>														3FFF
PORTC	0E22	—	—	RC<13:0>														xxxx
LATC	0E24	—	—	LATC<13:0>														xxxx
ODCC	0E26	—	—	ODCC<13:0>														0000
CNENC	0E28	—	—	CNIEC<13:0>														0000
CNPUC	0E2A	—	—	CNPUC<13:0>														0000
CNPDC	0E2C	—	—	CNPDC<13:0>														0000
ANSEC	0E2E	—	—	—	ANSC<12:9>				—	—	ANSC<6:4>			—	ANSC<2:0>			1E77

Legend: x = unknown value on Reset; — = unimplemented, read as '0'. Reset values are shown in hexadecimal.

© 2013-2015 Microchip Technology Inc.

TABLE 4-32: PORTA REGISTER MAP FOR dsPIC33EPXXGS506 DEVICES

SFR Name	Addr.	Bit 15	Bit 14	Bit 13	Bit 12	Bit 11	Bit 10	Bit 9	Bit 8	Bit 7	Bit 6	Bit 5	Bit 4	Bit 3	Bit 2	Bit 1	Bit 0	All Resets
TRISA	0E00	—	—	—	—	—	—	—	—	—	—	—	TRISA<4:0>					001F
PORTA	0E02	—	—	—	—	—	—	—	—	—	—	—	RA<4:0>					0000
LATA	0E04	—	—	—	—	—	—	—	—	—	—	—	LATA<4:0>					0000
ODCA	0E06	—	—	—	—	—	—	—	—	—	—	—	ODCA<4:0>					0000
CNENA	0E08	—	—	—	—	—	—	—	—	—	—	—	CNIEA<4:0>					0000
CNPUA	0E0A	—	—	—	—	—	—	—	—	—	—	—	CNPUA<4:0>					0000
CNPDA	0E0C	—	—	—	—	—	—	—	—	—	—	—	CNPDA<4:0>					0000
ANSELA	0E0E	—	—	—	—	—	—	—	—	—	—	—	—	—	ANSA<2:0>			0007

Legend: — = unimplemented, read as '0'. Reset values are shown in hexadecimal.

TABLE 4-33: PORTB REGISTER MAP FOR dsPIC33EPXXGS506 DEVICES

SFR Name	Addr.	Bit 15	Bit 14	Bit 13	Bit 12	Bit 11	Bit 10	Bit 9	Bit 8	Bit 7	Bit 6	Bit 5	Bit 4	Bit 3	Bit 2	Bit 1	Bit 0	All Resets
TRISB	0E10	TRISB<15:0>																FFFF
PORTB	0E12	RB<15:0>																xxxx
LATB	0E14	LATB<15:0>																xxxx
ODCB	0E16	ODCB<15:0>																0000
CNENB	0E18	CNIEB<15:0>																0000
CNPUB	0E1A	CNPUB<15:0>																0000
CNPDB	0E1C	CNPDB<15:0>																0000
ANSELB	0E1E	—	—	—	—	—	ANSB<10:9>		—	ANSB<7:5>			—	ANSB<3:0>				06EF

Legend: x = unknown value on Reset; — = unimplemented, read as '0'. Reset values are shown in hexadecimal.

TABLE 4-34: PORTC REGISTER MAP FOR dsPIC33EPXXGS506 DEVICES

SFR Name	Addr.	Bit 15	Bit 14	Bit 13	Bit 12	Bit 11	Bit 10	Bit 9	Bit 8	Bit 7	Bit 6	Bit 5	Bit 4	Bit 3	Bit 2	Bit 1	Bit 0	All Resets
TRISC	0E20	TRISC<15:0>																FFFF
PORTC	0E22	RC<15:0>																xxxx
LATC	0E24	LATC<15:0>																xxxx
ODCC	0E26	ODCC<15:0>																0000
CNENC	0E28	CNIEC<15:0>																0000
CNPUC	0E2A	CNPUC<15:0>																0000
CNPDC	0E2C	CNPDC<15:0>																0000
ANSELC	0E2E	—	—	—	ANSC<12:9>				—	—	ANSC<6:4>			—	ANSC<2:0>			1E77

Legend: x = unknown value on Reset; — = unimplemented, read as '0'. Reset values are shown in hexadecimal.

© 2013-2015 Microchip Technology Inc.

TABLE 4-35: PORTD REGISTER MAP FOR dsPIC33EPXXGS506 DEVICES

SFR Name	Addr.	Bit 15	Bit 14	Bit 13	Bit 12	Bit 11	Bit 10	Bit 9	Bit 8	Bit 7	Bit 6	Bit 5	Bit 4	Bit 3	Bit 2	Bit 1	Bit 0	All Resets
TRISD	0E30	TRISD<15:0>																FFFF
PORTD	0E32	RD<15:0>																xxxx
LATD	0E34	LATD<15:0>																xxxx
ODCD	0E36	ODCD<15:0>																0000
CNEND	0E38	CNIED<15:0>																0000
CNPUD	0E3A	CNPUD<15:0>																0000
CNPDD	0E3C	CNPDD<15:0>																0000
ANSELD	0E3E	—	ANSD<14:13>		—	—	—	—	—	ANSD7	—	—	—	—	ANSD2	—	—	6084

Legend: x = unknown value on Reset; — = unimplemented, read as '0'. Reset values are shown in hexadecimal.

© 2013-2015 Microchip Technology Inc.

4.4.1 PAGED MEMORY SCHEME

The dsPIC33EPXXGS50X architecture extends the available Data Space through a paging scheme, which allows the available Data Space to be accessed using `MOV` instructions in a linear fashion for pre- and post-modified Effective Addresses (EAs). The upper half of the base Data Space address is used in conjunction with the Data Space Page (DSRPAG) register to form the Program Space Visibility (PSV) address.

The Data Space Page (DSRPAG) register is located in the SFR space. Construction of the PSV address is shown in Figure 4-9. When DSRPAG<9> = `1` and the base address bit, EA<15> = `1`, the DSRPAG<8:0> bits are concatenated onto EA<14:0> to form the 24-bit PSV read address.

The paged memory scheme provides access to multiple 32-Kbyte windows in the PSV memory. The Data Space Page (DSRPAG) register, in combination with the upper half of the Data Space address, can provide up to 8 Mbytes of PSV address space. The paged data memory space is shown in Figure 4-10.

The Program Space (PS) can be accessed with a DSRPAG of 0x200 or greater. Only reads from PS are supported using the DSRPAG.

FIGURE 4-9: PROGRAM SPACE VISIBILITY (PSV) READ ADDRESS GENERATION

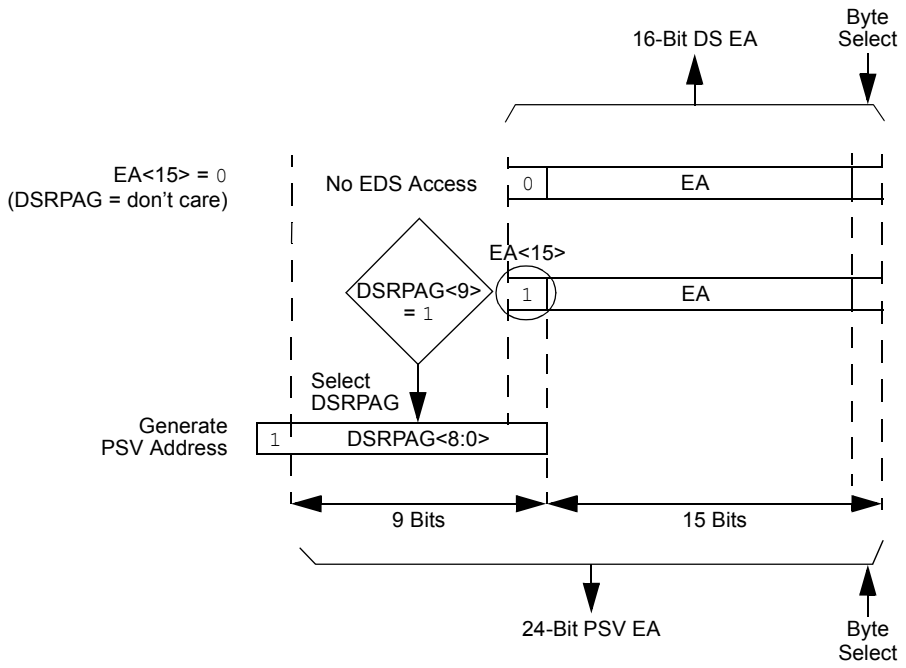

Note: DS read access when DSRPAG = 0x000 will force an address error trap.

© 2013-2015 Microchip Technology Inc.

FIGURE 4-10: PAGED DATA MEMORY SPACE

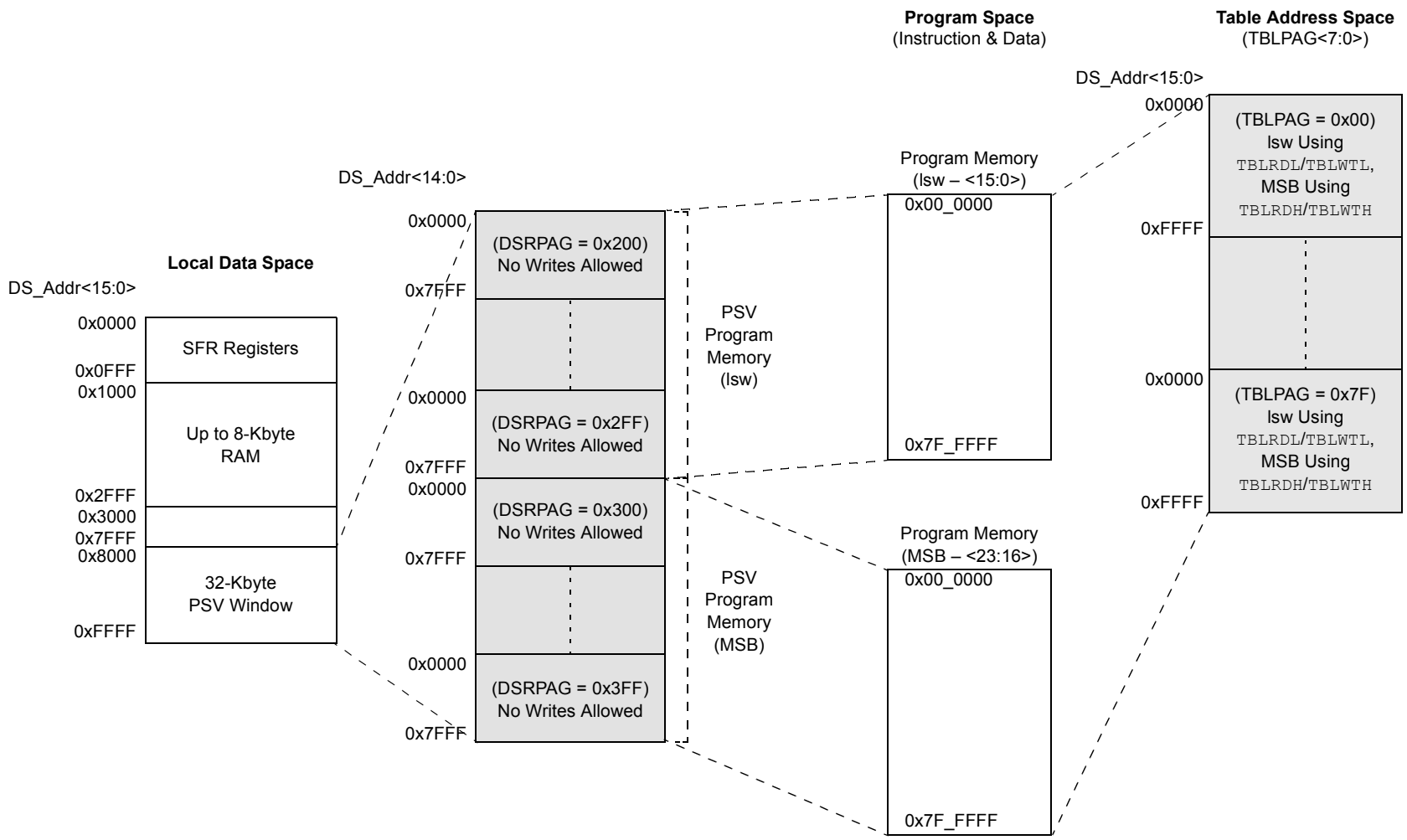

© 2013-2015 Microchip Technology Inc.

When a PSV page overflow or underflow occurs, EA<15> is cleared as a result of the register indirect EA calculation. An overflow or underflow of the EA in the PSV pages can occur at the page boundaries when:

- The initial address, prior to modification, addresses the PSV page
- The EA calculation uses Pre- or Post-Modified Register Indirect Addressing; however, this does not include Register Offset Addressing

In general, when an overflow is detected, the DSRPAG register is incremented and the EA<15> bit is set to keep the base address within the PSV window. When an underflow is detected, the DSRPAG register is decremented and the EA<15> bit is set to keep the base address within the PSV window. This creates a linear PSV address space, but only when using Register Indirect Addressing modes.

Exceptions to the operation described above arise when entering and exiting the boundaries of Page 0 and PSV spaces. Table 4-36 lists the effects of overflow and underflow scenarios at different boundaries.

In the following cases, when overflow or underflow occurs, the EA<15> bit is set and the DSRPAG is not modified; therefore, the EA will wrap to the beginning of the current page:

- Register Indirect with Register Offset Addressing
- Modulo Addressing
- Bit-Reversed Addressing

TABLE 4-36: OVERFLOW AND UNDERFLOW SCENARIOS AT PAGE 0 AND PSV SPACE BOUNDARIES(2,3,4)

O/U, R/W	Operation	Before			After		
		DSxPAG	DS EA<15>	Page Description	DSxPAG	DS EA<15>	Page Description
O, Read	[++Wn] or [Wn++]	DSRPAG = 0x2FF	1	PSV: Last lsw page	DSRPAG = 0x300	1	PSV: First MSB page
O, Read		DSRPAG = 0x3FF	1	PSV: Last MSB page	DSRPAG = 0x3FF	0	See **Note 1**
U, Read	[--Wn] or [Wn--]	DSRPAG = 0x001	1	PSV page	DSRPAG = 0x001	0	See **Note 1**
U, Read		DSRPAG = 0x200	1	PSV: First lsw page	DSRPAG = 0x200	0	See **Note 1**
U, Read		DSRPAG = 0x300	1	PSV: First MSB page	DSRPAG = 0x2FF	1	PSV: Last lsw page

Legend: O = Overflow, U = Underflow, R = Read, W = Write

Note 1: The Register Indirect Addressing now addresses a location in the base Data Space (0x0000-0x8000).

2: An EDS access, with DSRPAG = 0x000, will generate an address error trap.

3: Only reads from PS are supported using DSRPAG.

4: Pseudolinear Addressing is not supported for large offsets.

© 2013-2015 Microchip Technology Inc.

4.4.2 EXTENDED X DATA SPACE

The lower portion of the base address space range, between 0x0000 and 0x7FFF, is always accessible, regardless of the contents of the Data Space Page register. It is indirectly addressable through the register indirect instructions. It can be regarded as being located in the default EDS Page 0 (i.e., EDS address range of 0x000000 to 0x007FFF with the base address bit, EA<15> = 0, for this address range). However, Page 0 cannot be accessed through the upper 32 Kbytes, 0x8000 to 0xFFFF, of base Data Space in combination with DSRPAG = 0x00. Consequently, DSRPAG is initialized to 0x001 at Reset.

Note 1:	DSRPAG should not be used to access Page 0. An EDS access with DSRPAG set to 0x000 will generate an address error trap.
2:	Clearing the DSRPAG in software has no effect.

The remaining PSV pages are only accessible using the DSRPAG register in combination with the upper 32 Kbytes, 0x8000 to 0xFFFF, of the base address, where base address bit, EA<15> = 1.

4.4.3 SOFTWARE STACK

The W15 register serves as a dedicated Software Stack Pointer (SSP), and is automatically modified by exception processing, subroutine calls and returns; however, W15 can be referenced by any instruction in the same manner as all other W registers. This simplifies reading, writing and manipulating the Stack Pointer (for example, creating stack frames).

Note:	To protect against misaligned stack accesses, W15<0> is fixed to '0' by the hardware.

W15 is initialized to 0x1000 during all Resets. This address ensures that the SSP points to valid RAM in all dsPIC33EPXXGS50X devices and permits stack availability for non-maskable trap exceptions. These can occur before the SSP is initialized by the user software. You can reprogram the SSP during initialization to any location within Data Space.

The Software Stack Pointer always points to the first available free word and fills the software stack, working from lower toward higher addresses. Figure 4-11 illustrates how it pre-decrements for a stack pop (read) and post-increments for a stack push (writes).

When the PC is pushed onto the stack, PC<15:0> are pushed onto the first available stack word, then PC<22:16> are pushed into the second available stack location. For a PC push during any CALL instruction, the MSB of the PC is zero-extended before the push, as shown in Figure 4-11. During exception processing, the MSB of the PC is concatenated with the lower 8 bits of the CPU STATUS Register, SR. This allows the contents of SRL to be preserved automatically during interrupt processing.

Note 1:	To maintain system Stack Pointer (W15) coherency, W15 is never subject to (EDS) paging, and is therefore, restricted to an address range of 0x0000 to 0xFFFF. The same applies to the W14 when used as a Stack Frame Pointer (SFA = 1).
2:	As the stack can be placed in, and can access X and Y spaces, care must be taken regarding its use, particularly with regard to local automatic variables in a C development environment

FIGURE 4-11: CALL STACK FRAME

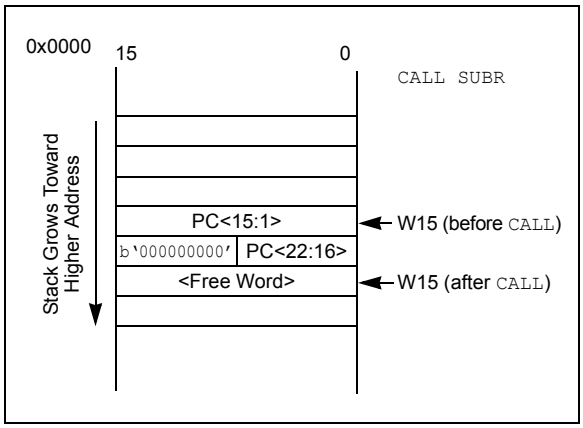

4.5 Instruction Addressing Modes

The addressing modes shown in Table 4-37 form the basis of the addressing modes optimized to support the specific features of individual instructions. The addressing modes provided in the MAC class of instructions differ from those in the other instruction types.

4.5.1 FILE REGISTER INSTRUCTIONS

Most file register instructions use a 13-bit address field (f) to directly address data present in the first 8192 bytes of data memory (Near Data Space). Most file register instructions employ a Working register, W0, which is denoted as WREG in these instructions. The destination is typically either the same file register or WREG (with the exception of the MUL instruction), which writes the result to a register or register pair. The MOV instruction allows additional flexibility and can access the entire Data Space.

4.5.2 MCU INSTRUCTIONS

The three-operand MCU instructions are of the form:

```
Operand 3 = Operand 1 <function> Operand 2
```

where Operand 1 is always a Working register (that is, the addressing mode can only be Register Direct), which is referred to as Wb. Operand 2 can be a W register fetched from data memory or a 5-bit literal. The result location can either be a W register or a data memory location. The following addressing modes are supported by MCU instructions:

- Register Direct
- Register Indirect
- Register Indirect Post-Modified
- Register Indirect Pre-Modified
- 5-Bit or 10-Bit Literal

Note: Not all instructions support all the addressing modes given above. Individual instructions can support different subsets of these addressing modes.

TABLE 4-37: FUNDAMENTAL ADDRESSING MODES SUPPORTED

Addressing Mode	Description
File Register Direct	The address of the file register is specified explicitly.
Register Direct	The contents of a register are accessed directly.
Register Indirect	The contents of Wn form the Effective Address (EA).
Register Indirect Post-Modified	The contents of Wn form the EA. Wn is post-modified (incremented or decremented) by a constant value.
Register Indirect Pre-Modified	Wn is pre-modified (incremented or decremented) by a signed constant value to form the EA.
Register Indirect with Register Offset (Register Indexed)	The sum of Wn and Wb forms the EA.
Register Indirect with Literal Offset	The sum of Wn and a literal forms the EA.

© 2013-2015 Microchip Technology Inc.

4.5.3 MOVE AND ACCUMULATOR INSTRUCTIONS

Move instructions, and the DSP accumulator class of instructions, provide a greater degree of addressing flexibility than other instructions. In addition to the addressing modes supported by most MCU instructions, move and accumulator instructions also support Register Indirect with Register Offset Addressing mode, also referred to as Register Indexed mode.

Note:	For the `MOV` instructions, the addressing mode specified in the instruction can differ for the source and destination EA. However, the 4-bit Wb (Register Offset) field is shared by both source and destination (but typically only used by one).

In summary, the following addressing modes are supported by move and accumulator instructions:

- Register Direct
- Register Indirect
- Register Indirect Post-modified
- Register Indirect Pre-modified
- Register Indirect with Register Offset (Indexed)
- Register Indirect with Literal Offset
- 8-Bit Literal
- 16-Bit Literal

Note:	Not all instructions support all the addressing modes given above. Individual instructions may support different subsets of these addressing modes.

4.5.4 `MAC` INSTRUCTIONS

The dual source operand DSP instructions (`CLR`, `ED`, `EDAC`, `MAC`, `MPY`, `MPY.N`, `MOVSAC` and `MSC`), also referred to as `MAC` instructions, use a simplified set of addressing modes to allow the user application to effectively manipulate the Data Pointers through register indirect tables.

The two-source operand prefetch registers must be members of the set {W8, W9, W10, W11}. For data reads, W8 and W9 are always directed to the X RAGU, and W10 and W11 are always directed to the Y AGU. The Effective Addresses generated (before and after modification) must therefore, be valid addresses within X Data Space for W8 and W9, and Y Data Space for W10 and W11.

Note:	Register Indirect with Register Offset Addressing mode is available only for W9 (in X space) and W11 (in Y space).

In summary, the following addressing modes are supported by the `MAC` class of instructions:

- Register Indirect
- Register Indirect Post-Modified by 2
- Register Indirect Post-Modified by 4
- Register Indirect Post-Modified by 6
- Register Indirect with Register Offset (Indexed)

4.5.5 OTHER INSTRUCTIONS

Besides the addressing modes outlined previously, some instructions use literal constants of various sizes. For example, `BRA` (branch) instructions use 16-bit signed literals to specify the branch destination directly, whereas the `DISI` instruction uses a 14-bit unsigned literal field. In some instructions, such as `ULNK`, the source of an operand or result is implied by the opcode itself. Certain operations, such as a `NOP`, do not have any operands.

4.6 Modulo Addressing

Modulo Addressing mode is a method of providing an automated means to support circular data buffers using hardware. The objective is to remove the need for software to perform data address boundary checks when executing tightly looped code, as is typical in many DSP algorithms.

Modulo Addressing can operate in either Data or Program Space (since the Data Pointer mechanism is essentially the same for both). One circular buffer can be supported in each of the X (which also provides the pointers into Program Space) and Y Data Spaces. Modulo Addressing can operate on any W Register Pointer. However, it is not advisable to use W14 or W15 for Modulo Addressing since these two registers are used as the Stack Frame Pointer and Stack Pointer, respectively.

In general, any particular circular buffer can be configured to operate in only one direction, as there are certain restrictions on the buffer start address (for incrementing buffers) or end address (for decrementing buffers), based upon the direction of the buffer.

The only exception to the usage restrictions is for buffers that have a power-of-two length. As these buffers satisfy the start and end address criteria, they can operate in a Bidirectional mode (that is, address boundary checks are performed on both the lower and upper address boundaries).

4.6.1 START AND END ADDRESS

The Modulo Addressing scheme requires that a starting and ending address be specified and loaded into the 16-bit Modulo Buffer Address registers: XMODSRT, XMODEND, YMODSRT and YMODEND (see Table 4-1).

> **Note:** Y space Modulo Addressing EA calculations assume word-sized data (LSb of every EA is always clear).

The length of a circular buffer is not directly specified. It is determined by the difference between the corresponding start and end addresses. The maximum possible length of the circular buffer is 32K words (64 Kbytes).

4.6.2 W ADDRESS REGISTER SELECTION

The Modulo and Bit-Reversed Addressing Control register, MODCON<15:0>, contains enable flags, as well as a W register field to specify the W Address registers. The XWM and YWM fields select the registers that operate with Modulo Addressing:

- If XWM = `1111`, X RAGU and X WAGU Modulo Addressing is disabled
- If YWM = `1111`, Y AGU Modulo Addressing is disabled

The X Address Space Pointer W (XWM) register, to which Modulo Addressing is to be applied, is stored in MODCON<3:0> (see Table 4-1). Modulo Addressing is enabled for X Data Space when XWM is set to any value other than '`1111`' and the XMODEN bit is set (MODCON<15>).

The Y Address Space Pointer W (YWM) register, to which Modulo Addressing is to be applied, is stored in MODCON<7:4>. Modulo Addressing is enabled for Y Data Space when YWM is set to any value other than '`1111`' and the YMODEN bit (MODCON<14>) is set.

FIGURE 4-12: MODULO ADDRESSING OPERATION EXAMPLE

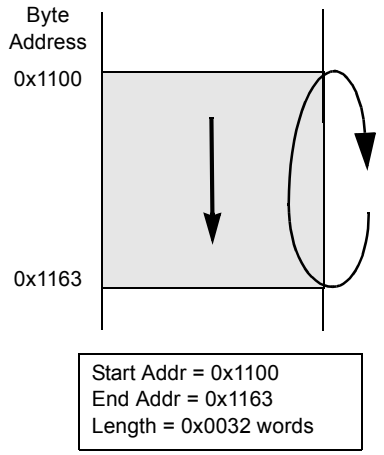


```
MOV     #0x1100, W0
MOV     W0, XMODSRT     ;set modulo start address
MOV     #0x1163, W0
MOV     W0, MODEND      ;set modulo end address
MOV     #0x8001, W0
MOV     W0, MODCON      ;enable W1, X AGU for modulo

MOV     #0x0000, W0     ;W0 holds buffer fill value

MOV     #0x1110, W1     ;point W1 to buffer

DO      AGAIN, #0x31    ;fill the 50 buffer locations
MOV     W0, [W1++]      ;fill the next location
AGAIN:  INC W0, W0      ;increment the fill value
```


© 2013-2015 Microchip Technology Inc.

4.6.3 MODULO ADDRESSING APPLICABILITY

Modulo Addressing can be applied to the Effective Address (EA) calculation associated with any W register. Address boundaries check for addresses equal to:

- The upper boundary addresses for incrementing buffers
- The lower boundary addresses for decrementing buffers

It is important to realize that the address boundaries check for addresses less than or greater than the upper (for incrementing buffers) and lower (for decrementing buffers) boundary addresses (not just equal to). Address changes can, therefore, jump beyond boundaries and still be adjusted correctly.

Note:	The modulo corrected Effective Address is written back to the register only when Pre-Modify or Post-Modify Addressing mode is used to compute the Effective Address. When an address offset (such as [W7 + W2]) is used, Modulo Addressing correction is performed, but the contents of the register remain unchanged.

4.7 Bit-Reversed Addressing

Bit-Reversed Addressing mode is intended to simplify data reordering for radix-2 FFT algorithms. It is supported by the X AGU for data writes only.

The modifier, which can be a constant value or register contents, is regarded as having its bit order reversed. The address source and destination are kept in normal order. Thus, the only operand requiring reversal is the modifier.

4.7.1 BIT-REVERSED ADDRESSING IMPLEMENTATION

Bit-Reversed Addressing mode is enabled in any of these situations:

- BWMx bits (W register selection) in the MODCON register are any value other than '`1111`' (the stack cannot be accessed using Bit-Reversed Addressing)
- The BREN bit is set in the XBREV register
- The addressing mode used is Register Indirect with Pre-Increment or Post-Increment

If the length of a bit-reversed buffer is $M = 2^N$ bytes, the last 'N' bits of the data buffer start address must be zeros.

XB<14:0> is the Bit-Reversed Addressing modifier, or 'pivot point', which is typically a constant. In the case of an FFT computation, its value is equal to half of the FFT data buffer size.

Note:	All bit-reversed EA calculations assume word-sized data (LSb of every EA is always clear). The XB value is scaled accordingly to generate compatible (byte) addresses.

When enabled, Bit-Reversed Addressing is executed only for Register Indirect with Pre-Increment or Post-Increment Addressing and word-sized data writes. It does not function for any other addressing mode or for byte-sized data and normal addresses are generated instead. When Bit-Reversed Addressing is active, the W Address Pointer is always added to the address modifier (XB) and the offset associated with the Register Indirect Addressing mode is ignored. In addition, as word-sized data is a requirement, the LSb of the EA is ignored (and always clear).

Note:	Modulo Addressing and Bit-Reversed Addressing can be enabled simultaneously using the same W register, but Bit-Reversed Addressing operation will always take precedence for data writes when enabled.

If Bit-Reversed Addressing has already been enabled by setting the BREN (XBREV<15>) bit, a write to the XBREV register should not be immediately followed by an indirect read operation using the W register that has been designated as the Bit-Reversed Pointer.

FIGURE 4-13: BIT-REVERSED ADDRESSING EXAMPLE

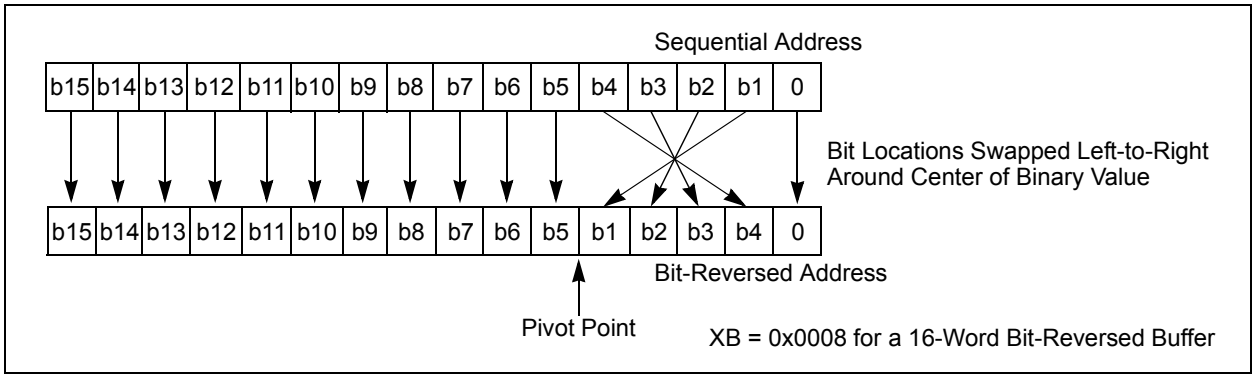

TABLE 4-38: BIT-REVERSED ADDRESSING SEQUENCE (16-ENTRY)

Normal Address					Bit-Reversed Address				
A3	A2	A1	A0	Decimal	A3	A2	A1	A0	Decimal
0	0	0	0	0	0	0	0	0	0
0	0	0	1	1	1	0	0	0	8
0	0	1	0	2	0	1	0	0	4
0	0	1	1	3	1	1	0	0	12
0	1	0	0	4	0	0	1	0	2
0	1	0	1	5	1	0	1	0	10
0	1	1	0	6	0	1	1	0	6
0	1	1	1	7	1	1	1	0	14
1	0	0	0	8	0	0	0	1	1
1	0	0	1	9	1	0	0	1	9
1	0	1	0	10	0	1	0	1	5
1	0	1	1	11	1	1	0	1	13
1	1	0	0	12	0	0	1	1	3
1	1	0	1	13	1	0	1	1	11
1	1	1	0	14	0	1	1	1	7
1	1	1	1	15	1	1	1	1	15

© 2013-2015 Microchip Technology Inc.

4.8 Interfacing Program and Data Memory Spaces

The dsPIC33EPXXGS50X family architecture uses a 24-bit wide Program Space (PS) and a 16-bit wide Data Space (DS). The architecture is also a modified Harvard scheme, meaning that data can also be present in the Program Space. To use this data successfully, it must be accessed in a way that preserves the alignment of information in both spaces.

Aside from normal execution, the architecture of the dsPIC33EPXXGS50X family devices provides two methods by which Program Space can be accessed during operation:

- Using table instructions to access individual bytes or words anywhere in the Program Space
- Remapping a portion of the Program Space into the Data Space (Program Space Visibility)

Table instructions allow an application to read or write to small areas of the program memory. This capability makes the method ideal for accessing data tables that need to be updated periodically. It also allows access to all bytes of the program word. The remapping method allows an application to access a large block of data on a read-only basis, which is ideal for look-ups from a large table of static data. The application can only access the least significant word of the program word.

TABLE 4-39: PROGRAM SPACE ADDRESS CONSTRUCTION

Access Type	Access Space	Program Space Address				
		<23>	<22:16>	<15>	<14:1>	<0>
Instruction Access (Code Execution)	User	0	PC<22:1>			0
		0xxx xxxx xxxx xxxx xxxx xxx0				
TBLRD/TBLWT (Byte/Word Read/Write)	User	TBLPAG<7:0>		Data EA<15:0>		
		0xxx xxxx		xxxx xxxx xxxx xxxx		
	Configuration	TBLPAG<7:0>		Data EA<15:0>		
		1xxx xxxx		xxxx xxxx xxxx xxxx		

FIGURE 4-14: DATA ACCESS FROM PROGRAM SPACE ADDRESS GENERATION

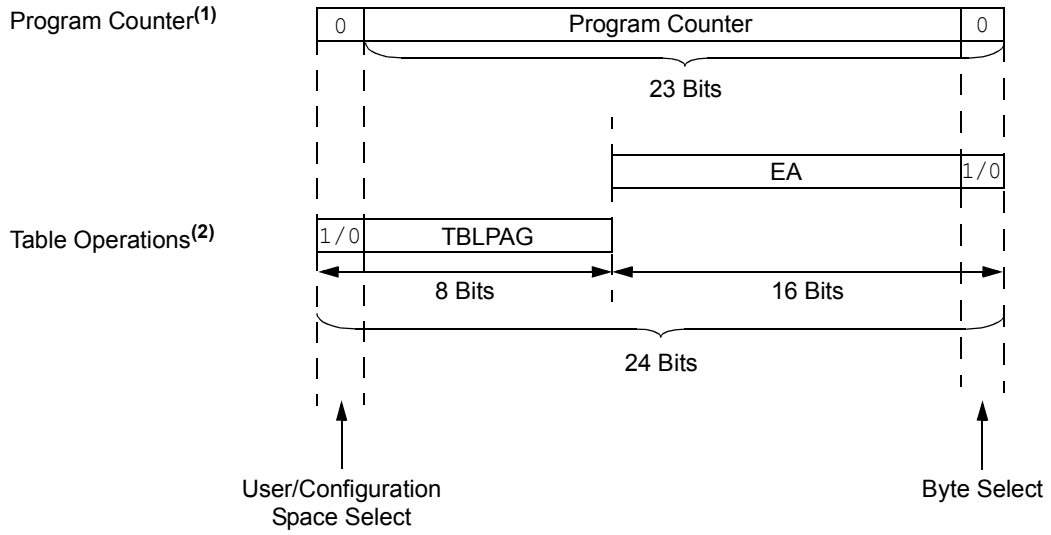

Note 1: The Least Significant bit (LSb) of Program Space addresses is always fixed as '0' to maintain word alignment of data in the Program and Data Spaces.

2: Table operations are not required to be word-aligned. Table Read operations are permitted in the configuration memory space.

4.8.1 DATA ACCESS FROM PROGRAM MEMORY USING TABLE INSTRUCTIONS

The TBLRDL and TBLWTL instructions offer a direct method of reading or writing the lower word of any address within the Program Space without going through Data Space. The TBLRDH and TBLWTH instructions are the only method to read or write the upper 8 bits of a Program Space word as data.

The PC is incremented by two for each successive 24-bit program word. This allows program memory addresses to directly map to Data Space addresses. Program memory can thus be regarded as two 16-bit wide word address spaces, residing side by side, each with the same address range. TBLRDL and TBLWTL access the space that contains the least significant data word. TBLRDH and TBLWTH access the space that contains the upper data byte.

Two table instructions are provided to move byte or word-sized (16-bit) data to and from Program Space. Both function as either byte or word operations.

- TBLRDL (Table Read Low):
  - In Word mode, this instruction maps the lower word of the Program Space location (P<15:0>) to a data address (D<15:0>)
  - In Byte mode, either the upper or lower byte of the lower program word is mapped to the lower byte of a data address. The upper byte is selected when Byte Select is '1'; the lower byte is selected when it is '0'.
- TBLRDH (Table Read High):
  - In Word mode, this instruction maps the entire upper word of a program address (P<23:16>) to a data address. The 'phantom' byte (D<15:8>) is always '0'.
  - In Byte mode, this instruction maps the upper or lower byte of the program word to D<7:0> of the data address in the TBLRDL instruction. The data is always '0' when the upper 'phantom' byte is selected (Byte Select = 1).

In a similar fashion, two table instructions, TBLWTH and TBLWTL, are used to write individual bytes or words to a Program Space address. The details of their operation are explained in **Section 5.0 "Flash Program Memory"**.

For all table operations, the area of program memory space to be accessed is determined by the Table Page register (TBLPAG). TBLPAG covers the entire program memory space of the device, including user application and configuration spaces. When TBLPAG<7> = 0, the table page is located in the user memory space. When TBLPAG<7> = 1, the page is located in configuration space.

FIGURE 4-15: ACCESSING PROGRAM MEMORY WITH TABLE INSTRUCTIONS

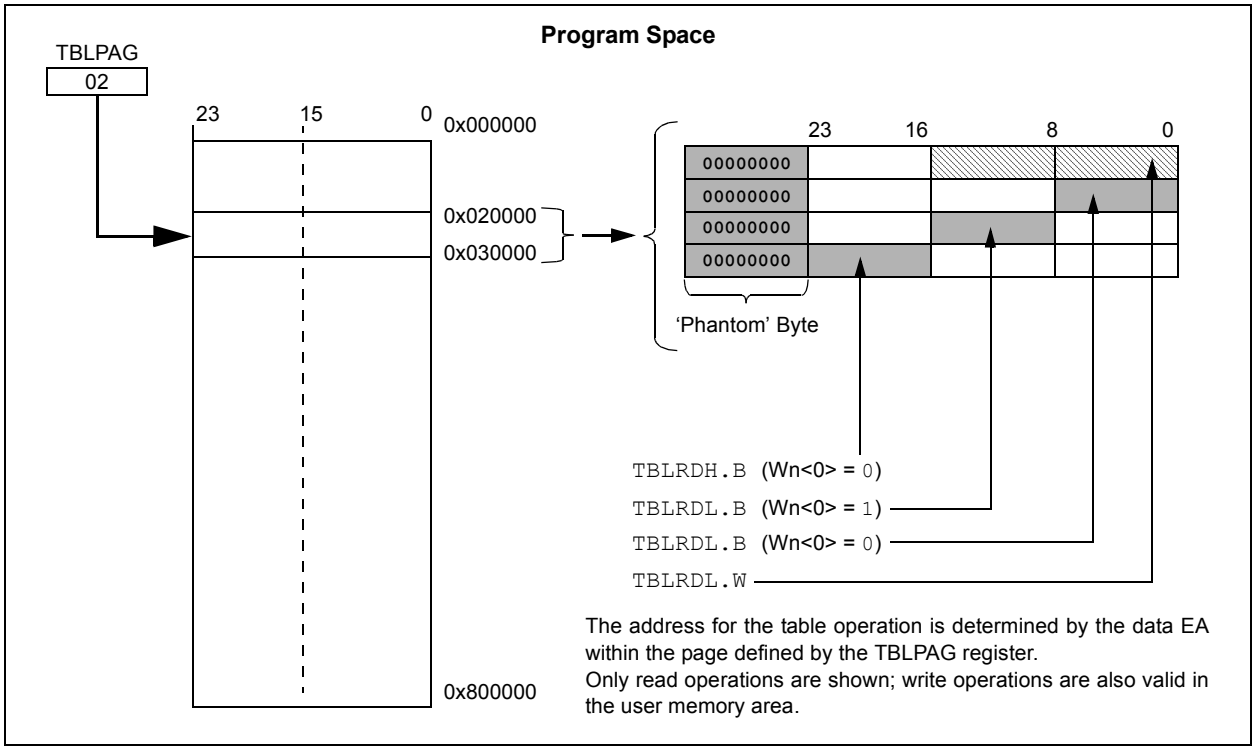

© 2013-2015 Microchip Technology Inc.

5.0 FLASH PROGRAM MEMORY

Note 1: This data sheet summarizes the features of the dsPIC33EPXXGS50X family of devices. It is not intended to be a comprehensive reference source. To complement the information in this data sheet, refer to **"Flash Programming"** (DS70609) in the *"dsPIC33/PIC24 Family Reference Manual"*, which is available from the Microchip web site (www.microchip.com)

2: Some registers and associated bits described in this section may not be available on all devices. Refer to **Section 4.0 "Memory Organization"** in this data sheet for device-specific register and bit information.

The dsPIC33EPXXGS50X family devices contain internal Flash program memory for storing and executing application code. The memory is readable, writable and erasable during normal operation over the entire VDD range.

Flash memory can be programmed in three ways:

- In-Circuit Serial Programming™ (ICSP™) programming capability
- Enhanced In-Circuit Serial Programming (Enhanced ICSP)
- Run-Time Self-Programming (RTSP)

ICSP allows for a dsPIC33EPXXGS50X family device to be serially programmed while in the end application circuit. This is done with a programming clock and programming data (PGECx/PGEDx) line, and three other lines for power (VDD), ground (VSS) and Master Clear (MCLR). This allows customers to manufacture boards with unprogrammed devices and then program the device just before shipping the product. This also allows the most recent firmware or a custom firmware to be programmed.

Enhanced In-Circuit Serial Programming uses an on-board bootloader, known as the Program Executive, to manage the programming process. Using an SPI data frame format, the Program Executive can erase, program and verify program memory. For more information on Enhanced ICSP, see the device programming specification.

RTSP is accomplished using `TBLRD` (Table Read) and `TBLWT` (Table Write) instructions. With RTSP, the user application can write program memory data with a single program memory word and erase program memory in blocks or 'pages' of 512 instructions (1536 bytes) at a time.

5.1 Table Instructions and Flash Programming

Regardless of the method used, all programming of Flash memory is done with the Table Read and Table Write instructions. These allow direct read and write access to the program memory space from the data memory while the device is in normal operating mode. The 24-bit target address in the program memory is formed using bits<7:0> of the TBLPAG register and the Effective Address (EA) from a W register, specified in the table instruction, as shown in Figure 5-1. The `TBLRDL` and the `TBLWTL` instructions are used to read or write to bits<15:0> of program memory. `TBLRDL` and `TBLWTL` can access program memory in both Word and Byte modes. The `TBLRDH` and `TBLWTH` instructions are used to read or write to bits<23:16> of program memory. `TBLRDH` and `TBLWTH` can also access program memory in Word or Byte mode.

FIGURE 5-1: ADDRESSING FOR TABLE REGISTERS

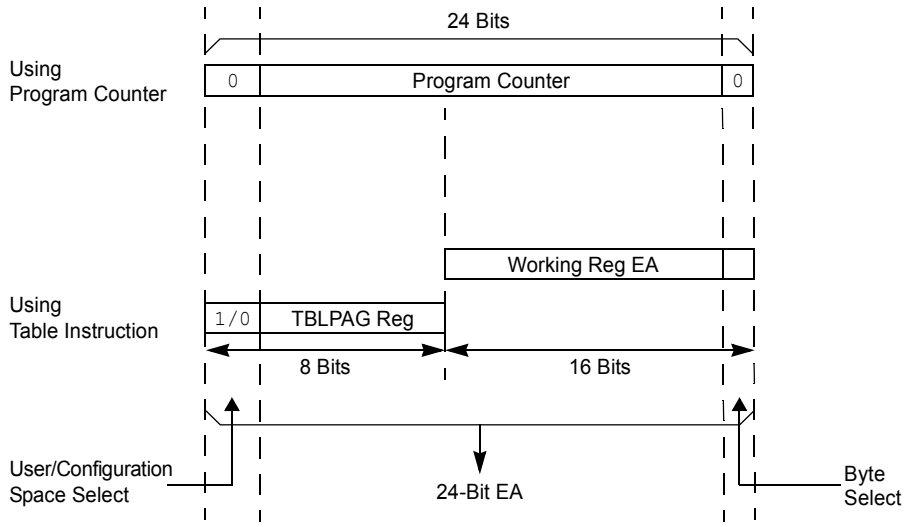

5.2 RTSP Operation

The dsPIC33EPXXGS50X family Flash program memory array is organized into rows of 64 instructions or 192 bytes. RTSP allows the user application to erase a single page (8 rows or 512 instructions) of memory at a time and to program one row at a time. It is possible to program two instructions at a time as well.

The page erase and single row write blocks are edge-aligned, from the beginning of program memory, on boundaries of 1536 bytes and 192 bytes, respectively. Figure 26-14 in **Section 26.0 "Electrical Characteristics"** lists the typical erase and programming times.

Row programming is performed by loading 192 bytes into data memory and then loading the address of the first byte in that row into the NVMSRCADR register. Once the write has been initiated, the device will automatically load the write latches and increment the NVMSRCADR and the NVMADR(U) registers until all bytes have been programmed. The RPDF bit (NVMCON<9>) selects the format of the stored data in RAM to be either compressed or uncompressed. See Figure 5-2 for data formatting. Compressed data helps to reduce the amount of required RAM by using the upper byte of the second word for the MSB of the second instruction.

The basic sequence for RTSP word programming is to use the `TBLWTL` and `TBLWTH` instructions to load two of the 24-bit instructions into the write latches found in configuration memory space. Refer to Figure 4-1 through Figure 4-4 for write latch addresses. Programming is performed by unlocking and setting the control bits in the NVMCON register.

All erase and program operations may optionally use the NVM interrupt to signal the successful completion of the operation. For example, when performing Flash write operations on the Inactive Partition in Dual Partition mode, where the CPU remains running, it is necessary to wait for the NVM interrupt before programming the next block of Flash program memory.

FIGURE 5-2: UNCOMPRESSED/ COMPRESSED FORMAT

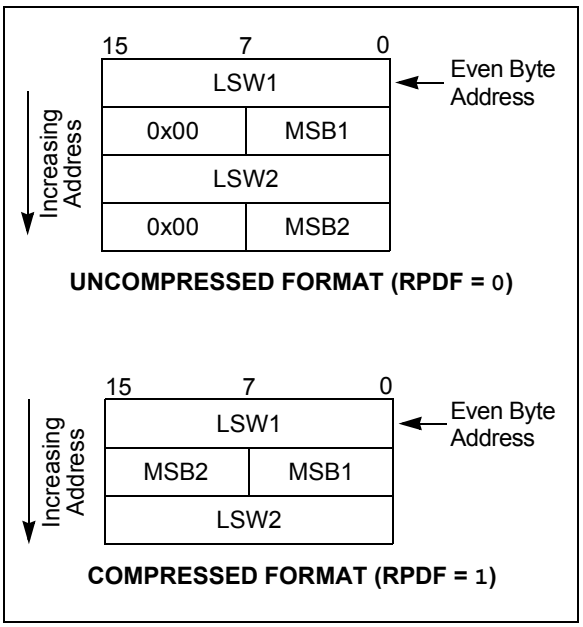

5.3 Programming Operations

A complete programming sequence is necessary for programming or erasing the internal Flash in RTSP mode. The processor stalls (waits) until the programming operation is finished. Setting the WR bit (NVMCON<15>) starts the operation and the WR bit is automatically cleared when the operation is finished.

5.3.1 PROGRAMMING ALGORITHM FOR FLASH PROGRAM MEMORY

Programmers can program two adjacent words (24 bits x 2) of program Flash memory at a time on every other word address boundary (0x000000, 0x000004, 0x000008, etc.). To do this, it is necessary to erase the page that contains the desired address of the location the user wants to change. For protection against accidental operations, the write initiate sequence for NVMKEY must be used to allow any erase or program operation to proceed. After the programming command has been executed, the user application must wait for the programming time until programming is complete. The two instructions following the start of the programming sequence should be `NOP`s.

© 2013-2015 Microchip Technology Inc.

5.4 Dual Partition Flash Configuration

For dsPIC33EP64GS50X devices operating in Dual Partition Flash Program Memory modes, the Inactive Partition can be erased and programmed without stalling the processor. The same programming algorithms are used for programming and erasing the Flash in the Inactive Partition, as described in **Section 5.2 "RTSP Operation"**. On top of the page erase option, the entire Flash memory of the Inactive Partition can be erased by configuring the NVMOP<3:0> bits in the NVMCON register.

Note 1:	The application software to be loaded into the Inactive Partition will have the address of the Active Partition. The bootloader firmware will need to offset the address by 0x400000 in order to write to the Inactive Partition.

5.4.1 FLASH PARTITION SWAPPING

The Boot Sequence Number is used for determining the Active Partition at start-up and is encoded within the FBTSEQ Configuration register bits. Unlike most Configuration registers, which only utilize the lower 16 bits of the program memory, FBTSEQ is a 24-bit Configuration Word. The Boot Sequence Number (BSEQ) is a 12-bit value and is stored in FBTSEQ twice. The true value is stored in bits, FBTSEQ<11:0>, and its complement is stored in bits, FBTSEQ<23:12>. At device Reset, the sequence numbers are read and the partition with the lowest sequence number becomes the Active Partition. If one of the Boot Sequence Numbers is invalid, the device will select the partition with the valid Boot Sequence Number, or default to Partition 1 if both sequence numbers are invalid. See **Section 23.0 "Special Features"** for more information.

The `BOOTSWP` instruction provides an alternative means of swapping the Active and Inactive Partitions (soft swap) without the need for a device Reset. The `BOOTSWP` must always be followed by a `GOTO` instruction. The `BOOTSWP` instruction swaps the Active and Inactive Partitions, and the PC vectors to the location specified by the `GOTO` instruction in the newly Active Partition.

It is important to note that interrupts should temporarily be disabled while performing the soft swap sequence and that after the partition swap, all peripherals and interrupts which were enabled remain enabled. Additionally, the RAM and stack will maintain state after the switch. As a result, it is recommended that applications using soft swaps jump to a routine that will reinitialize the device in order to ensure the firmware runs as expected. The Configuration registers will have no effect during a soft swap.

For robustness of operation, in order to execute the `BOOTSWP` instruction, it is necessary to execute the NVM unlocking sequence as follows:

1. Write 0x55 to NVMKEY.
2. Write 0xAA to NVMKEY.
3. Execute the `BOOTSWP` instruction.

If the unlocking sequence is not performed, the `BOOTSWP` instruction will be executed as a forced `NOP` and a `GOTO` instruction, following the `BOOTSWP` instruction, will be executed, causing the PC to jump to that location in the current operating partition.

The SFTSWP and P2ACTIV bits in the NVMCON register are used to determine a successful swap of the Active and Inactive Partitions, as well as which partition is active. After the `BOOTSWP` and `GOTO` instructions, the SFTSWP bit should be polled to verify the partition swap has occurred and then cleared for the next panel swap event.

5.4.2 DUAL PARTITION MODES

While operating in Dual Partition mode, dsPIC33EP64GS50X family devices have the option for both partitions to have their own defined security segments, as shown in Figure 23-4. Alternatively, the device can operate in Protected Dual Partition mode, where Partition 1 becomes permanently erase/write-protected. Protected Dual Partition mode allows for a "Factory Default" mode, which provides a fail-safe backup image to be stored in Partition 1.

dsPIC33EP64GS50X family devices can also operate in Privileged Dual Partition mode, where additional security protections are implemented to allow for protection of intellectual property when multiple parties have software within the device. In Privileged Dual Partition mode, both partitions place additional restrictions on the BSLIM register. These prevent changes to the size of the Boot Segment and General Segment, ensuring that neither segment will be altered.

5.5 Flash Memory Resources

Many useful resources are provided on the main product page of the Microchip web site for the devices listed in this data sheet. This product page contains the latest updates and additional information.

5.5.1 KEY RESOURCES

- Code Samples
- Application Notes
- Software Libraries
- Webinars
- All Related *"dsPIC33/PIC24 Family Reference Manual"* Sections
- Development Tools

5.6 Control Registers

Five SFRs are used to write and erase the program Flash memory: NVMCON, NVMKEY, NVMADR, NVMADRU and NVMSRCADR/H.

The NVMCON register (Register 5-1) selects the operation to be performed (page erase, word/row program, Inactive Partition erase), initiates the program or erase cycle and is used to determine the Active Partition in Dual Partition modes.

NVMKEY (Register 5-4) is a write-only register that is used for write protection. To start a programming or erase sequence, the user application must consecutively write 0x55 and 0xAA to the NVMKEY register.

There are two NVM Address registers: NVMADRU and NVMADR. These two registers, when concatenated, form the 24-bit Effective Address (EA) of the selected word/row for programming operations, or the selected page for erase operations. The NVMADRU register is used to hold the upper 8 bits of the EA, while the NVMADR register is used to hold the lower 16 bits of the EA.

For row programming operation, data to be written to program Flash memory is written into data memory space (RAM) at an address defined by the NVMSRCADR register (location of first element in row programming data).

© 2013-2015 Microchip Technology Inc.

REGISTER 5-1: NVMCON: NONVOLATILE MEMORY (NVM) CONTROL REGISTER

R/SO-0(1)	R/W-0(1)	R/W-0(1)	R/W-0	R/C-0	R-0	R/W-0	R/C-0
WR	WREN	WRERR	NVMSIDL(2)	SFTSWP(6)	P2ACTIV(6)	RPDF	URERR
bit 15							bit 8

U-0	U-0	U-0	U-0	R/W-0(1)	R/W-0(1)	R/W-0(1)	R/W-0(1)
—	—	—	—	NVMOP3(3,4)	NVMOP2(3,4)	NVMOP1(3,4)	NVMOP0(3,4)
bit 7							bit 0

Legend:	C = Clearable bit	SO = Settable Only bit	
R = Readable bit	W = Writable bit	U = Unimplemented bit, read as ‘0’	
-n = Value at POR	‘1’ = Bit is set	‘0’ = Bit is cleared	x = Bit is unknown

bit 15 **WR:** Write Control bit(1)
- 1 = Initiates a Flash memory program or erase operation; the operation is self-timed and the bit is cleared by hardware once the operation is complete
- 0 = Program or erase operation is complete and inactive

bit 14 **WREN:** Write Enable bit(1)
- 1 = Enables Flash program/erase operations
- 0 = Inhibits Flash program/erase operations

bit 13 **WRERR:** Write Sequence Error Flag bit(1)
- 1 = An improper program or erase sequence attempt, or termination has occurred (bit is set automatically on any set attempt of the WR bit)
- 0 = The program or erase operation completed normally

bit 12 **NVMSIDL:** NVM Stop in Idle Control bit(2)
- 1 = Flash voltage regulator goes into Standby mode during Idle mode
- 0 = Flash voltage regulator is active during Idle mode

bit 11 **SFTSWP:** Partition Soft Swap Status bit(6)
- 1 = Partitions have been successfully swapped using the `BOOTSWP` instruction (soft swap)
- 0 = Awaiting successful partition swap using the `BOOTSWP` instruction or a device Reset will determine the Active Partition based on FBTSEQ

bit 10 **P2ACTIV:** Partition 2 Active Status bit(6)
- 1 = Partition 2 Flash is mapped into the active region
- 0 = Partition 1 Flash is mapped into the active region

bit 9 **RPDF:** Row Programming Data Format bit
- 1 = Row data to be stored in RAM in compressed format
- 0 = Row data to be stored in RAM in uncompressed format

bit 8 **URERR:** Row Programming Data Underrun Error bit
- 1 = Indicates row programming operation has been terminated
- 0 = No data underrun error is detected

bit 7-4 **Unimplemented:** Read as ‘0’

Note 1: These bits can only be reset on a POR.

2: If this bit is set, power consumption will be further reduced (I_{IDLE}) and upon exiting Idle mode, there is a delay (T_{VREG}) before Flash memory becomes operational.

3: All other combinations of NVMOP<3:0> are unimplemented.

4: Execution of the `PWRSAV` instruction is ignored while any of the NVM operations are in progress.

5: Two adjacent words on a 4-word boundary are programmed during execution of this operation.

6: Only available on dsPIC33EP64GS50X devices operating in Dual Partition mode. For all other devices, this bit is reserved.

REGISTER 5-1: NVMCON: NONVOLATILE MEMORY (NVM) CONTROL REGISTER (CONTINUED)

bit 3-0 **NVMOP<3:0>:** NVM Operation Select bits(1,3,4)

1111 = Reserved
•
•
•
0101 = Reserved
0100 = Inactive Partition memory erase operation
0011 = Memory page erase operation
0010 = Memory row program operation
0001 = Memory double-word program operation(5)
0000 = Reserved

Note 1: These bits can only be reset on a POR.

2: If this bit is set, power consumption will be further reduced (IIDLE) and upon exiting Idle mode, there is a delay (TVREG) before Flash memory becomes operational.

3: All other combinations of NVMOP<3:0> are unimplemented.

4: Execution of the PWRSAV instruction is ignored while any of the NVM operations are in progress.

5: Two adjacent words on a 4-word boundary are programmed during execution of this operation.

6: Only available on dsPIC33EP64GS50X devices operating in Dual Partition mode. For all other devices, this bit is reserved.

© 2013-2015 Microchip Technology Inc.

REGISTER 5-2: NVMADR: NONVOLATILE MEMORY LOWER ADDRESS REGISTER

R/W-x	R/W-x	R/W-x	R/W-x	R/W-x	R/W-x	R/W-x	R/W-x
NVMADR<15:8>							
bit 15							bit 8

R/W-x	R/W-x	R/W-x	R/W-x	R/W-x	R/W-x	R/W-x	R/W-x
NVMADR<7:0>							
bit 7							bit 0

Legend:			
R = Readable bit	W = Writable bit	U = Unimplemented bit, read as ‘0’	
-n = Value at POR	‘1’ = Bit is set	‘0’ = Bit is cleared	x = Bit is unknown

bit 15-0 **NVMADR<15:0>:** Nonvolatile Memory Lower Write Address bits
Selects the lower 16 bits of the location to program or erase in program Flash memory. This register may be read or written to by the user application.

REGISTER 5-3: NVMADRU: NONVOLATILE MEMORY UPPER ADDRESS REGISTER

U-0	U-0	U-0	U-0	U-0	U-0	U-0	U-0
—	—	—	—	—	—	—	—
bit 15							bit 8

R/W-x	R/W-x	R/W-x	R/W-x	R/W-x	R/W-x	R/W-x	R/W-x
NVMADRU<23:16>							
bit 7							bit 0

Legend:			
R = Readable bit	W = Writable bit	U = Unimplemented bit, read as ‘0’	
-n = Value at POR	‘1’ = Bit is set	‘0’ = Bit is cleared	x = Bit is unknown

bit 15-8 **Unimplemented:** Read as ‘0’

bit 7-0 **NVMADRU<23:16>:** Nonvolatile Memory Upper Write Address bits
Selects the upper 8 bits of the location to program or erase in program Flash memory. This register may be read or written to by the user application.

REGISTER 5-4: NVMKEY: NONVOLATILE MEMORY KEY REGISTER

U-0	U-0	U-0	U-0	U-0	U-0	U-0	U-0
—	—	—	—	—	—	—	—
bit 15							bit 8

W-0	W-0	W-0	W-0	W-0	W-0	W-0	W-0
NVMKEY<7:0>							
bit 7							bit 0

Legend:			
R = Readable bit	W = Writable bit	U = Unimplemented bit, read as ‘0’	
-n = Value at POR	‘1’ = Bit is set	‘0’ = Bit is cleared	x = Bit is unknown

bit 15-8 **Unimplemented:** Read as ‘0’

bit 7-0 **NVMKEY<7:0>:** NVM Key Register bits (write-only)

REGISTER 5-5: NVMSRCADR: NVM SOURCE DATA ADDRESS REGISTER

R/W-0	R/W-0	R/W-0	R/W-0	R/W-0	R/W-0	R/W-0	R/W-0
NVMSRCADR<15:8>							
bit 15							bit 8

R/W-0	R/W-0	R/W-0	R/W-0	R/W-0	R/W-0	R/W-0	R/W-0
NVMSRCADR<7:0>							
bit 7							bit 0

Legend:			
R = Readable bit	W = Writable bit	U = Unimplemented bit, read as ‘0’	
-n = Value at POR	‘1’ = Bit is set	‘0’ = Bit is cleared	x = Bit is unknown

bit 15-0 **NVMSRCADR<15:0>:** NVM Source Data Address bits

The RAM address of the data to be programmed into Flash when the NVMOP<3:0> bits are set to row programming.

© 2013-2015 Microchip Technology Inc.

6.0 RESETS

Note 1: This data sheet summarizes the features of the dsPIC33EPXXGS50X family of devices. It is not intended to be a comprehensive reference source. To complement the information in this data sheet, refer to **"Reset"** (DS70602) in the *"dsPIC33/PIC24 Family Reference Manual"*, which is available from the Microchip web site (www.microchip.com)

2: Some registers and associated bits described in this section may not be available on all devices. Refer to **Section 4.0 "Memory Organization"** in this data sheet for device-specific register and bit information.

The Reset module combines all Reset sources and controls the device Master Reset Signal, $\overline{\text{SYSRST}}$. The following is a list of device Reset sources:

- POR: Power-on Reset
- BOR: Brown-out Reset
- $\overline{\text{MCLR}}$: Master Clear Pin Reset
- SWR: `RESET` Instruction
- WDTO: Watchdog Timer Time-out Reset
- CM: Configuration Mismatch Reset
- TRAPR: Trap Conflict Reset
- IOPUWR: Illegal Condition Device Reset
  - Illegal Opcode Reset
  - Uninitialized W Register Reset
  - Security Reset

A simplified block diagram of the Reset module is shown in Figure 6-1.

Any active source of Reset will make the $\overline{\text{SYSRST}}$ signal active. On system Reset, some of the registers associated with the CPU and peripherals are forced to a known Reset state, and some are unaffected.

Note: Refer to the specific peripheral section or **Section 4.0 "Memory Organization"** of this manual for register Reset states.

All types of device Reset set a corresponding status bit in the RCON register to indicate the type of Reset (see Register 6-1).

A POR clears all the bits, except for the BOR and POR bits (RCON<1:0>) that are set. The user application can set or clear any bit, at any time, during code execution. The RCON bits only serve as status bits. Setting a particular Reset status bit in software does not cause a device Reset to occur.

The RCON register also has other bits associated with the Watchdog Timer and device power-saving states. The function of these bits is discussed in other sections of this manual.

Note: The status bits in the RCON register should be cleared after they are read so that the next RCON register value after a device Reset is meaningful.

For all Resets, the default clock source is determined by the FNOSC<2:0> bits in the FOSCSEL Configuration register. The value of the FNOSCx bits is loaded into the NOSC<2:0> (OSCCON<10:8>) bits on Reset, which in turn, initializes the system clock.

FIGURE 6-1: RESET SYSTEM BLOCK DIAGRAM

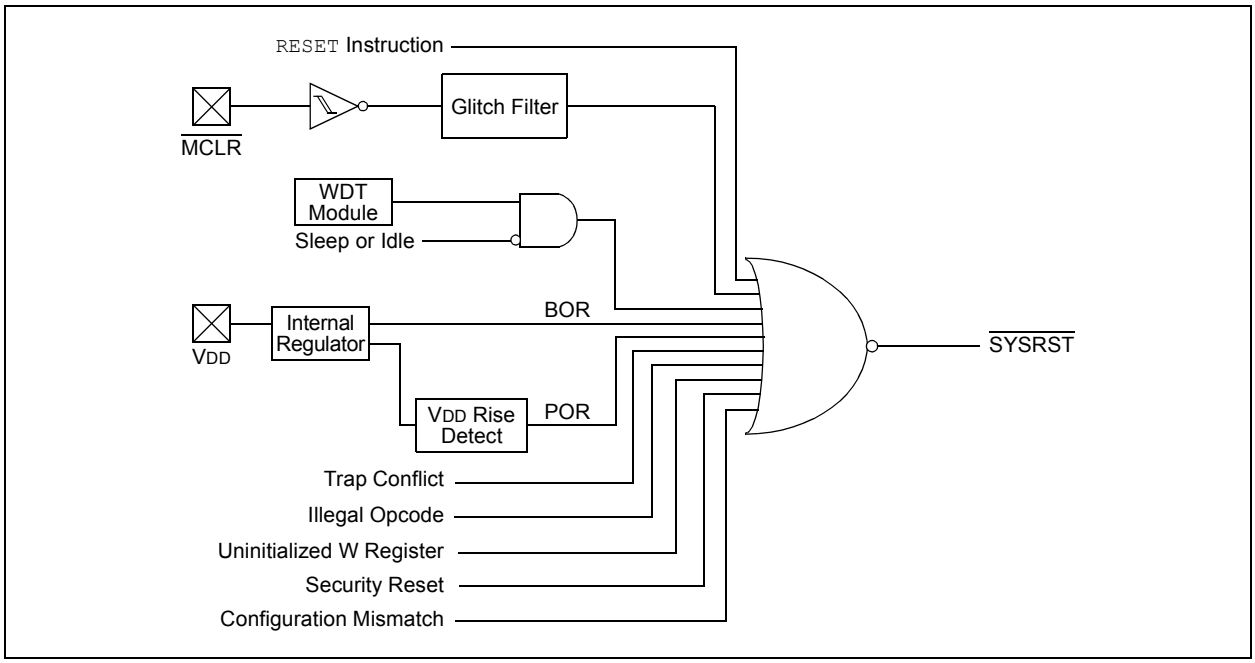

6.1 Reset Resources

Many useful resources are provided on the main product page of the Microchip web site for the devices listed in this data sheet. This product page contains the latest updates and additional information.

6.1.1 KEY RESOURCES

- **"Reset"** (DS70602) in the *"dsPIC33/PIC24 Family Reference Manual"*
- Code Samples
- Application Notes
- Software Libraries
- Webinars
- All Related *"dsPIC33/PIC24 Family Reference Manual"* Sections
- Development Tools

© 2013-2015 Microchip Technology Inc.

REGISTER 6-1: RCON: RESET CONTROL REGISTER(1)

R/W-0	R/W-0	U-0	U-0	R/W-0	U-0	R/W-0	R/W-0
TRAPR	IOPUWR	—	—	VREGSF	—	CM	VREGS
bit 15							bit 8

R/W-0	R/W-0	R/W-0	R/W-0	R/W-0	R/W-0	R/W-1	R/W-1
EXTR	SWR	SWDTEN(2)	WDTO	SLEEP	IDLE	BOR	POR
bit 7							bit 0

Legend:			
R = Readable bit	W = Writable bit	U = Unimplemented bit, read as ‘0’	
-n = Value at POR	‘1’ = Bit is set	‘0’ = Bit is cleared	x = Bit is unknown

bit 15 **TRAPR:** Trap Reset Flag bit
1 = A Trap Conflict Reset has occurred
0 = A Trap Conflict Reset has not occurred

bit 14 **IOPUWR:** Illegal Opcode or Uninitialized W Register Access Reset Flag bit
1 = An illegal opcode detection, an illegal address mode or Uninitialized W register used as an Address Pointer caused a Reset
0 = An illegal opcode or Uninitialized W register Reset has not occurred

bit 13-12 **Unimplemented:** Read as ‘0’

bit 11 **VREGSF:** Flash Voltage Regulator Standby During Sleep bit
1 = Flash voltage regulator is active during Sleep
0 = Flash voltage regulator goes into Standby mode during Sleep

bit 10 **Unimplemented:** Read as ‘0’

bit 9 **CM:** Configuration Mismatch Flag bit
1 = A Configuration Mismatch Reset has occurred.
0 = A Configuration Mismatch Reset has not occurred

bit 8 **VREGS:** Voltage Regulator Standby During Sleep bit
1 = Voltage regulator is active during Sleep
0 = Voltage regulator goes into Standby mode during Sleep

bit 7 **EXTR:** External Reset ($\overline{\text{MCLR}}$) Pin bit
1 = A Master Clear (pin) Reset has occurred
0 = A Master Clear (pin) Reset has not occurred

bit 6 **SWR:** Software RESET (Instruction) Flag bit
1 = A RESET instruction has been executed
0 = A RESET instruction has not been executed

bit 5 **SWDTEN:** Software Enable/Disable of WDT bit(2)
1 = WDT is enabled
0 = WDT is disabled

bit 4 **WDTO:** Watchdog Timer Time-out Flag bit
1 = WDT time-out has occurred
0 = WDT time-out has not occurred

Note 1: All of the Reset status bits can be set or cleared in software. Setting one of these bits in software does not cause a device Reset.

2: If the WDTEN<1:0> Configuration bits are ‘11’ (unprogrammed), the WDT is always enabled, regardless of the SWDTEN bit setting.

REGISTER 6-1: RCON: RESET CONTROL REGISTER(1) (CONTINUED)

bit 3 **SLEEP:** Wake-up from Sleep Flag bit
1 = Device has been in Sleep mode
0 = Device has not been in Sleep mode

bit 2 **IDLE:** Wake-up from Idle Flag bit
1 = Device has been in Idle mode
0 = Device has not been in Idle mode

bit 1 **BOR:** Brown-out Reset Flag bit
1 = A Brown-out Reset has occurred
0 = A Brown-out Reset has not occurred

bit 0 **POR:** Power-on Reset Flag bit
1 = A Power-on Reset has occurred
0 = A Power-on Reset has not occurred

Note 1: All of the Reset status bits can be set or cleared in software. Setting one of these bits in software does not cause a device Reset.

2: If the WDTEN<1:0> Configuration bits are '11' (unprogrammed), the WDT is always enabled, regardless of the SWDTEN bit setting.

© 2013-2015 Microchip Technology Inc.

7.0 INTERRUPT CONTROLLER

Note 1: This data sheet summarizes the features of the dsPIC33EPXXGS50X family of devices. It is not intended to be a comprehensive reference source. To complement the information in this data sheet, refer to **"Interrupts"** (DS70000600) in the *"dsPIC33/PIC24 Family Reference Manual"*, which is available from the Microchip web site (www.microchip.com).

2: Some registers and associated bits described in this section may not be available on all devices. Refer to **Section 4.0 "Memory Organization"** in this data sheet for device-specific register and bit information.

The dsPIC33EPXXGS50X family interrupt controller reduces the numerous peripheral interrupt request signals to a single interrupt request signal to the dsPIC33EPXXGS50X family CPU.

The interrupt controller has the following features:

- Six processor exceptions and software traps
- Seven user-selectable priority levels
- Interrupt Vector Table (IVT) with a unique vector for each interrupt or exception source
- Fixed priority within a specified user priority level
- Fixed interrupt entry and return latencies
- Alternate Interrupt Vector Table (AIVT) for debug support

7.1 Interrupt Vector Table

The dsPIC33EPXXGS50X family Interrupt Vector Table (IVT), shown in Figure 7-1, resides in program memory, starting at location, 000004h. The IVT contains six non-maskable trap vectors and up to 246 sources of interrupts. In general, each interrupt source has its own vector. Each interrupt vector contains a 24-bit wide address. The value programmed into each interrupt vector location is the starting address of the associated Interrupt Service Routine (ISR).

Interrupt vectors are prioritized in terms of their natural priority. This priority is linked to their position in the vector table. Lower addresses generally have a higher natural priority. For example, the interrupt associated with Vector 0 takes priority over interrupts at any other vector address.

7.1.1 ALTERNATE INTERRUPT VECTOR TABLE

The Alternate Interrupt Vector Table (AIVT), shown in Figure 7-2, is available only when the Boot Segment is defined and the AIVT has been enabled. To enable the Alternate Interrupt Vector Table, the Configuration bit, AIVTDIS in the FSEC register, must be programmed and the AIVTEN bit must be set (INTCON2<8> = `1`). When the AIVT is enabled, all interrupt and exception processes use the alternate vectors instead of the default vectors. The AIVT begins at the start of the last page of the Boot Segment, defined by BSLIM<12:0>. The second half of the page is no longer usable space. The Boot Segment must be at least 2 pages to enable the AIVT.

Note: Although the Boot Segment must be enabled in order to enable the AIVT, application code does not need to be present inside of the Boot Segment. The AIVT (and IVT) will inherit the Boot Segment code protection.

The AIVT supports debugging by providing a means to switch between an application and a support environment without requiring the interrupt vectors to be reprogrammed. This feature also enables switching between applications for evaluation of different software algorithms at run time.

7.2 Reset Sequence

A device Reset is not a true exception because the interrupt controller is not involved in the Reset process. The dsPIC33EPXXGS50X family devices clear their registers in response to a Reset, which forces the PC to zero. The device then begins program execution at location, 0x000000. A `GOTO` instruction at the Reset address can redirect program execution to the appropriate start-up routine.

Note: Any unimplemented or unused vector locations in the IVT should be programmed with the address of a default interrupt handler routine that contains a `RESET` instruction.

FIGURE 7-1: dsPIC33EPXXGS50X FAMILY INTERRUPT VECTOR TABLE

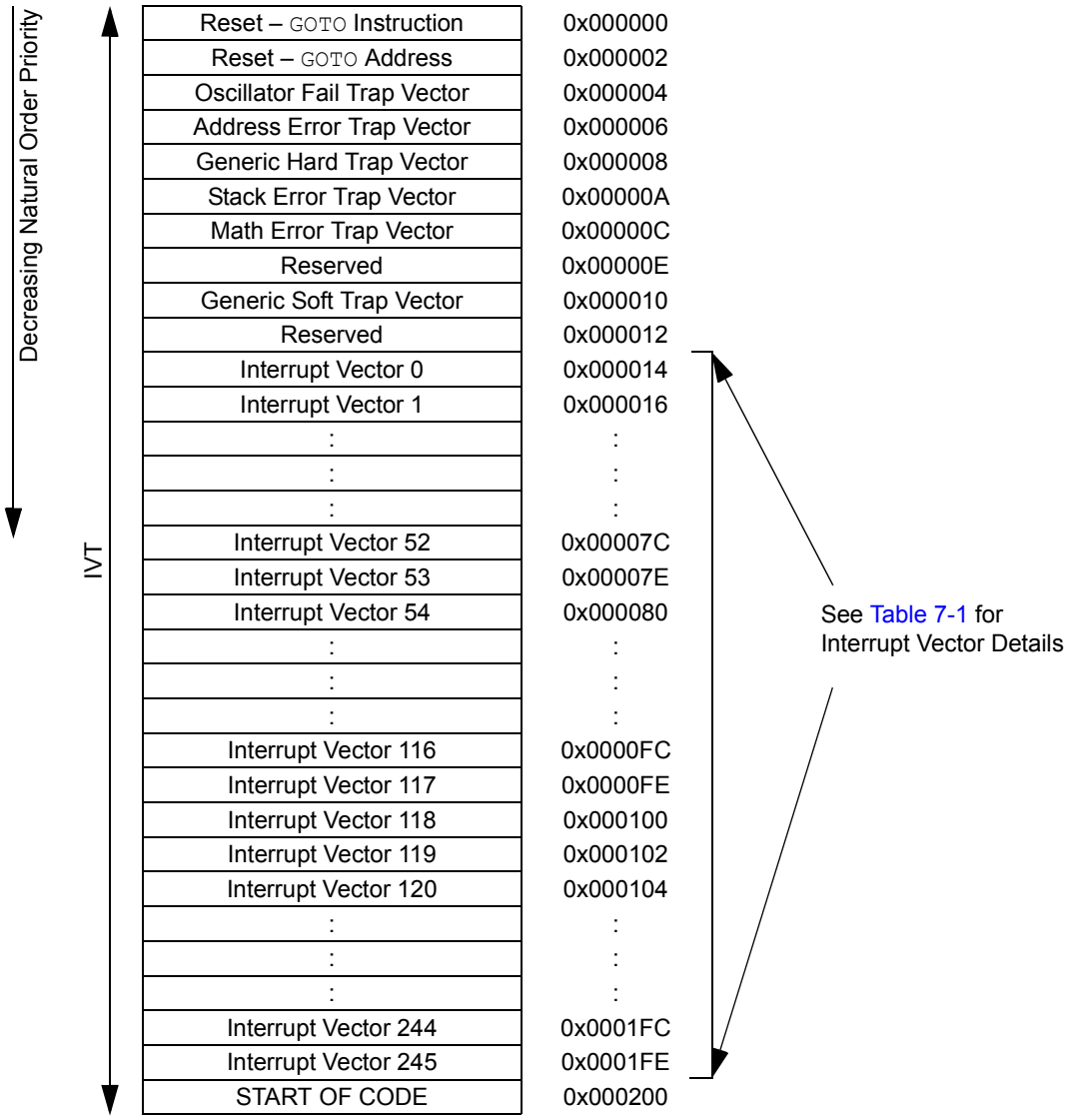

Note: In Dual Partition modes, each partition has a dedicated Interrupt Vector Table.

© 2013-2015 Microchip Technology Inc.

FIGURE 7-2: dsPIC33EPXXGS50X ALTERNATE INTERRUPT VECTOR TABLE(2)

Decreasing Natural Order Priority

AIVT

Reserved	BSLIM<12:0>(1) + 0x000000
Reserved	BSLIM<12:0>(1) + 0x000002
Oscillator Fail Trap Vector	BSLIM<12:0>(1) + 0x000004
Address Error Trap Vector	BSLIM<12:0>(1) + 0x000006
Generic Hard Trap Vector	BSLIM<12:0>(1) + 0x000008
Stack Error Trap Vector	BSLIM<12:0>(1) + 0x00000A
Math Error Trap Vector	BSLIM<12:0>(1) + 0x00000C
Reserved	BSLIM<12:0>(1) + 0x00000E
Generic Soft Trap Vector	BSLIM<12:0>(1) + 0x000010
Reserved	BSLIM<12:0>(1) + 0x000012
Interrupt Vector 0	BSLIM<12:0>(1) + 0x000014
Interrupt Vector 1	BSLIM<12:0>(1) + 0x000016
:	:
:	:
:	:
Interrupt Vector 52	BSLIM<12:0>(1) + 0x00007C
Interrupt Vector 53	BSLIM<12:0>(1) + 0x00007E
Interrupt Vector 54	BSLIM<12:0>(1) + 0x000080
:	:
:	:
:	:
Interrupt Vector 116	BSLIM<12:0>(1) + 0x0000FC
Interrupt Vector 117	BSLIM<12:0>(1) + 0x0000FE
Interrupt Vector 118	BSLIM<12:0>(1) + 0x000100
Interrupt Vector 119	BSLIM<12:0>(1) + 0x000102
Interrupt Vector 120	BSLIM<12:0>(1) + 0x000104
:	:
:	:
:	:
Interrupt Vector 244	BSLIM<12:0>(1) + 0x0001FC
Interrupt Vector 245	BSLIM<12:0>(1) + 0x0001FE

See Table 7-1 for Interrupt Vector Details

Note 1: The address depends on the size of the Boot Segment defined by BSLIM<12:0>. [(BSLIM<12:0> – 1) x 0x400] + Offset.

2: In Dual Partition modes, each partition has a dedicated Alternate Interrupt Vector Table (if enabled).

TABLE 7-1: INTERRUPT VECTOR DETAILS

Interrupt Source	Vector #	IRQ #	IVT Address	Interrupt Bit Location		
				Flag	Enable	Priority
Highest Natural Order Priority						
INT0 – External Interrupt 0	8	0	0x000014	IFS0<0>	IEC0<0>	IPC0<2:0>
IC1 – Input Capture 1	9	1	0x000016	IFS0<1>	IEC0<1>	IPC0<6:4>
OC1 – Output Compare 1	10	2	0x000018	IFS0<2>	IEC0<2>	IPC0<10:8>
T1 – Timer1	11	3	0x00001A	IFS0<3>	IEC0<3>	IPC0<14:12>
Reserved	12	4	0x00001C	—	—	—
IC2 – Input Capture 2	13	5	0x00001E	IFS0<5>	IEC0<5>	IPC1<6:4>
OC2 – Output Compare 2	14	6	0x000020	IFS0<6>	IEC0<6>	IPC1<10:8>
T2 – Timer2	15	7	0x000022	IFS0<7>	IEC0<7>	IPC1<14:12>
T3 – Timer3	16	8	0x000024	IFS0<8>	IEC0<8>	IPC2<2:0>
SPI1E – SPI1 Error	17	9	0x000026	IFS0<9>	IEC0<9>	IPC2<6:4>
SPI1 – SPI1 Transfer Done	18	10	0x000028	IFS0<10>	IEC0<10>	IPC2<10:8>
U1RX – UART1 Receiver	19	11	0x00002A	IFS0<11>	IEC0<11>	IPC2<14:12>
U1TX – UART1 Transmitter	20	12	0x00002C	IFS0<12>	IEC0<12>	IPC3<2:0>
ADC – ADC Global Convert Done	21	13	0x00002E	IFS0<13>	IEC0<13>	IPC3<6:4>
Reserved	22	14	0x000030	—	—	—
NVM – NVM Write Complete	23	15	0x000032	IFS0<15>	IEC0<15>	IPC3<14:12>
SI2C1 – I2C1 Slave Event	24	16	0x000034	IFS1<0>	IEC1<0>	IPC4<2:0>
MI2C1 – I2C1 Master Event	25	17	0x000036	IFS1<1>	IEC1<1>	IPC4<6:4>
CMP1 – Analog Comparator 1 Interrupt	26	18	0x000038	IFS1<2>	IEC1<2>	IPC4<10:8>
CN – Input Change Interrupt	27	19	0x00003A	IFS1<3>	IEC1<3>	IPC4<14:12>
INT1 – External Interrupt 1	28	20	0x00003C	IFS1<4>	IEC1<4>	IPC5<2:0>
Reserved	29-32	21-24	0x00003E-0x000044	—	—	—
OC3 – Output Compare 3	33	25	0x000046	IFS1<9>	IEC1<9>	IPC6<6:4>
OC4 – Output Compare 4	34	26	0x000048	IFS1<10>	IEC1<10>	IPC6<10:8>
T4 – Timer4	35	27	0x00004A	IFS1<11>	IEC1<11>	IPC6<14:12>
T5 – Timer5	36	28	0x00004C	IFS1<12>	IEC1<12>	IPC7<2:0>
INT2 – External Interrupt 2	37	29	0x00004E	IFS1<13>	IEC1<13>	IPC7<6:4>
U2RX – UART2 Receiver	38	30	0x000050	IFS1<14>	IEC1<14>	IPC7<10:8>
U2TX – UART2 Transmitter	39	31	0x000052	IFS1<15>	IEC1<15>	IPC7<14:12>
SPI2E – SPI2 Error	40	32	0x000054	IFS2<0>	IEC2<0>	IPC8<2:0>
SPI2 – SPI2 Transfer Done	41	33	0x000056	IFS2<1>	IEC2<1>	IPC8<6:4>
Reserved	42-44	34-36	0x000058-0x00005C	—	—	—
IC3 – Input Capture 3	45	37	0x00005E	IFS2<5>	IEC2<5>	IPC9<6:4>
IC4 – Input Capture 4	46	38	0x000060	IFS2<6>	IEC2<6>	IPC9<10:8>
Reserved	47-56	39-48	0x000062-0x000074	—	—	—
SI2C2 – I2C2 Slave Event	57	49	0x000076	IFS3<1>	IEC3<1>	IPC12<6:4>
MI2C2 – I2C2 Master Event	58	50	0x000078	IFS3<2>	IEC3<2>	IPC12<10:8>
Reserved	59-61	51-53	0x00007A-0x00007E	—	—	—
INT4 – External Interrupt 4	62	54	0x000080	IFS3<6>	IEC3<6>	IPC13<10:8>
Reserved	63-64	55-54	0x000082-0x000084	—	—	—
PSEM – PWM Special Event Match	65	57	0x000086	IFS3<9>	IEC3<9>	IPC14<6:4>
Reserved	66-72	58-64	0x000088-0x000094	—	—	—
U1E – UART1 Error Interrupt	73	65	0x000096	IFS4<1>	IEC4<1>	IPC16<6:4>
U2E – UART2 Error Interrupt	74	66	0x000098	IFS4<2>	IEC4<2>	IPC16<10:8>
Reserved	75-80	67-72	0x00009A-0x0000A4	—	—	—

© 2013-2015 Microchip Technology Inc.

TABLE 7-1: INTERRUPT VECTOR DETAILS (CONTINUED)

Interrupt Source	Vector #	IRQ #	IVT Address	Interrupt Bit Location		
				Flag	Enable	Priority
PWM Secondary Special Event Match	81	73	0x0000A6	IFS4<9>	IEC4<9>	IPC18<6:4>
Reserved	82-101	74-93	0x0000A8-0x0000CE	—	—	—
PWM1 – PWM1 Interrupt	102	94	0x0000D0	IFS5<14>	IEC5<14>	IPC23<10:8>
PWM2 – PWM2 Interrupt	103	95	0x0000D2	IFS5<15>	IEC5<15>	IPC23<14:12>
PWM3 – PWM3 Interrupt	104	96	0x0000D4	IFS6<0>	IEC6<0>	IPC24<2:0>
PWM4 – PWM4 Interrupt	105	97	0x0000D6	IFS6<1>	IEC6<1>	IPC24<6:4>
PWM5 – PWM5 Interrupt	106	98	0x0000D8	IFS6<2>	IEC6<2>	IPC24<10:8>
Reserved	106-110	99-102	0x0000DA-0x0000E0	—	—	—
CMP2 – Analog Comparator 2 Interrupt	111	103	0x0000E2	IFS6<7>	IEC6<7>	IPC25<14:12>
CMP3 – Analog Comparator 3 Interrupt	112	104	0x0000E4	IFS6<8>	IEC6<8>	IPC26<2:0>
CMP4 – Analog Comparator 4 Interrupt	113	105	0x0000E6	IFS6<9>	IEC6<9>	IPC26<6:4>
Reserved	114-117	106-109	0x0000E8-0x0000EE	—	—	—
AN0 Conversion Done	118	110	0x0000F0	IFS6<14>	IEC6<14>	IPC27<10:8>
AN1 Conversion Done	119	111	0x0000F2	IFS6<15>	IEC6<15>	IPC27<14:12>
AN2 Conversion Done	120	112	0x0000F4	IFS7<0>	IEC7<0>	IPC28<2:0>
AN3 Conversion Done	121	113	0x0000F6	IFS7<1>	IEC7<1>	IPC28<6:4>
AN4 Conversion Done	122	114	0x0000F8	IFS7<2>	IEC7<2>	IPC28<10:8>
AN5 Conversion Done	123	115	0x0000FA	IFS7<3>	IEC7<3>	IPC28<14:12>
AN6 Conversion Done	124	116	0x0000FC	IFS7<4>	IEC7<4>	IPC29<2:0>
AN7 Conversion Done	125	117	0x0000FE	IFS7<5>	IEC7<5>	IPC29<6:4>
Reserved	126-149	118-141	0x000100-0x00012E	—	—	—
ICD – ICD Application	150	142	0x000130	IFS8<14>	IEC8<14>	IPC35<10:8>
JTAG – JTAG Programming	151	143	0x000132	IFS8<15>	IEC8<15>	IPC35<14:12>
Reserved	152-158	144-150	0x000134-0x000140	—	—	—
AN8 Conversion Done	159	151	0x000142	IFS9<7>	IEC9<7>	IPC37<14:12>
AN9 Conversion Done	160	152	0x000144	IFS9<8>	IEC9<8>	IPC38<2:0>
AN10 Conversion Done	161	153	0x000146	IFS9<9>	IEC9<9>	IPC38<6:4>
AN11 Conversion Done	162	154	0x000148	IFS9<10>	IEC9<10>	IPC38<10:8>
AN12 Conversion Done	163	155	0x00014A	IFS9<11>	IEC9<11>	IPC38<14:12>
AN13 Conversion Done	164	156	0x00014C	IFS9<12>	IEC9<12>	IPC39<2:0>
AN14 Conversion Done	165	157	0x00014E	IFS9<13>	IEC9<13>	IPC39<6:4>
AN15 Conversion Done	166	158	0x000150	IFS9<14>	IEC9<14>	IPC39<10:8>
AN16 Conversion Done	167	159	0x000152	IFS9<15>	IEC9<15>	IPC39<14:12>
AN17 Conversion Done	168	160	0x000154	IFS10<0>	IEC10<0>	IPC40<2:0>
AN18 Conversion Done	169	161	0x000156	IFS10<1>	IEC10<1>	IPC40<6:4>
AN19 Conversion Done	170	162	0x000158	IFS10<2>	IEC10<2>	IPC40<10:8>
AN20 Conversion Done	171	163	0x00015A	IFS10<3>	IEC10<3>	IPC40<14:12>
AN21 Conversion Done	172	164	0x00015C	IFS10<4>	IEC10<4>	IPC41<2:0>
Reserved	173-180	165-172	0x00015C-0x00016C	—	—	—
I2C1 – I2C1 Bus Collision	181	173	0x00016E	IFS10<13>	IEC10<13>	IPC43<6:4>
I2C2 – I2C2 Bus Collision	182	174	0x000170	IFS10<14>	IEC10<14>	IPC43<10:8>
Reserved	183-184	175-176	0x000172-0x000174	—	—	—
ADCMP0 – ADC Digital Comparator 0	185	177	0x000176	IFS11<1>	IEC11<1>	IPC44<6:4>
ADCMP1 – ADC Digital Comparator 1	186	178	0x000178	IFS11<2>	IEC11<2>	IPC44<10:8>
ADFLTR0 – ADC Filter 0	187	179	0x00017A	IFS11<3>	IEC11<3>	IPC44<14:12>
ADFLTR1 – ADC Filter 1	188	180	0x00017C	IFS11<4>	IEC11<4>	IPC45<2:0>
Reserved	189-253	181-245	0x00017E-0x0001FE	—	—	—

7.3 Interrupt Resources

Many useful resources are provided on the main product page of the Microchip web site for the devices listed in this data sheet. This product page contains the latest updates and additional information.

7.3.1 KEY RESOURCES

- **"Interrupts"** (DS70000600) in the *"dsPIC33/PIC24 Family Reference Manual"*
- Code Samples
- Application Notes
- Software Libraries
- Webinars
- All Related *"dsPIC33/PIC24 Family Reference Manual"* Sections
- Development Tools

7.4 Interrupt Control and Status Registers

dsPIC33EPXXGS50X family devices implement the following registers for the interrupt controller:

- INTCON1
- INTCON2
- INTCON3
- INTCON4
- INTTREG

7.4.1 INTCON1 THROUGH INTCON4

Global interrupt control functions are controlled from INTCON1, INTCON2, INTCON3 and INTCON4.

INTCON1 contains the Interrupt Nesting Disable bit (NSTDIS), as well as the control and status flags for the processor trap sources.

The INTCON2 register controls external interrupt request signal behavior, contains the Global Interrupt Enable bit (GIE) and the Alternate Interrupt Vector Table Enable bit (AIVTEN).

INTCON3 contains the status flags for the Auxiliary PLL and DO stack overflow status trap sources.

The INTCON4 register contains the Software Generated Hard Trap Status bit (SGHT).

7.4.2 IFSx

The IFSx registers maintain all of the interrupt request flags. Each source of interrupt has a status bit, which is set by the respective peripherals or external signal and is cleared via software.

7.4.3 IECx

The IECx registers maintain all of the interrupt enable bits. These control bits are used to individually enable interrupts from the peripherals or external signals.

7.4.4 IPCx

The IPCx registers are used to set the Interrupt Priority Level (IPL) for each source of interrupt. Each user interrupt sources can be assigned to one of seven priority levels.

7.4.5 INTTREG

The INTTREG register contains the associated interrupt vector number and the new CPU Interrupt Priority Level, which are latched into the Vector Number (VECNUM<7:0>) and Interrupt Level bits (ILR<3:0>) fields in the INTTREG register. The new Interrupt Priority Level is the priority of the pending interrupt.

The interrupt sources are assigned to the IFSx, IECx and IPCx registers in the same sequence as they are listed in Table 7-1. For example, the INT0 (External Interrupt 0) is shown as having Vector Number 8 and a natural order priority of 0. Thus, the INT0IF bit is found in IFS0<0>, the INT0IE bit in IEC0<0> and the INT0IP<2:0> bits in the first position of IPC0 (IPC0<2:0>).

7.4.6 STATUS/CONTROL REGISTERS

Although these registers are not specifically part of the interrupt control hardware, two of the CPU Control registers contain bits that control interrupt functionality. For more information on these registers refer to **"CPU"** (DS70359) in the *"dsPIC33/PIC24 Family Reference Manual"*.

- The CPU STATUS Register, SR, contains the IPL<2:0> bits (SR<7:5>). These bits indicate the current CPU Interrupt Priority Level. The user software can change the current CPU Interrupt Priority Level by writing to the IPLx bits.
- The CORCON register contains the IPL3 bit which, together with IPL<2:0>, also indicates the current CPU priority level. IPL3 is a read-only bit so that trap events cannot be masked by the user software.

All Interrupt registers are described in Register 7-3 through Register 7-7 in the following pages.

© 2013-2015 Microchip Technology Inc.

REGISTER 7-1: SR: CPU STATUS REGISTER(1)

R/W-0	R/W-0	R/W-0	R/W-0	R/C-0	R/C-0	R-0	R/W-0
OA	OB	SA	SB	OAB	SAB	DA	DC
bit 15							bit 8

R/W-0(3)	R/W-0(3)	R/W-0(3)	R-0	R/W-0	R/W-0	R/W-0	R/W-0
IPL2(2)	IPL1(2)	IPL0(2)	RA	N	OV	Z	C
bit 7							bit 0

Legend:	C = Clearable bit		
R = Readable bit	W = Writable bit	U = Unimplemented bit, read as ‘0’	
-n = Value at POR	‘1’= Bit is set	‘0’ = Bit is cleared	x = Bit is unknown

bit 7-5 **IPL<2:0>:** CPU Interrupt Priority Level Status bits(2,3)
`111` = CPU Interrupt Priority Level is 7 (15); user interrupts are disabled
`110` = CPU Interrupt Priority Level is 6 (14)
`101` = CPU Interrupt Priority Level is 5 (13)
`100` = CPU Interrupt Priority Level is 4 (12)
`011` = CPU Interrupt Priority Level is 3 (11)
`010` = CPU Interrupt Priority Level is 2 (10)
`001` = CPU Interrupt Priority Level is 1 (9)
`000` = CPU Interrupt Priority Level is 0 (8)

Note 1: For complete register details, see Register 3-1.
2: The IPL<2:0> bits are concatenated with the IPL<3> bit (CORCON<3>) to form the CPU Interrupt Priority Level. The value in parentheses indicates the IPL, if IPL<3> = `1`. User interrupts are disabled when IPL<3> = `1`.
3: The IPL<2:0> Status bits are read-only when the NSTDIS bit (INTCON1<15>) = `1`.

REGISTER 7-2: CORCON: CORE CONTROL REGISTER(1)

R/W-0	U-0	R/W-0	R/W-0	R/W-0	R-0	R-0	R-0
VAR	—	US1	US0	EDT	DL2	DL1	DL0
bit 15							bit 8

R/W-0	R/W-0	R/W-1	R/W-0	R/C-0	R-0	R/W-0	R/W-0
SATA	SATB	SATDW	ACCSAT	IPL3(2)	SFA	RND	IF
bit 7							bit 0

Legend:	C = Clearable bit		
R = Readable bit	W = Writable bit	U = Unimplemented bit, read as ‘0’	
-n = Value at POR	‘1’= Bit is set	‘0’ = Bit is cleared	x = Bit is unknown

bit 15 **VAR:** Variable Exception Processing Latency Control bit
1 = Variable exception processing is enabled
0 = Fixed exception processing is enabled

bit 3 **IPL3:** CPU Interrupt Priority Level Status bit 3(2)
1 = CPU Interrupt Priority Level is greater than 7
0 = CPU Interrupt Priority Level is 7 or less

Note 1: For complete register details, see Register 3-2.
2: The IPL3 bit is concatenated with the IPL<2:0> bits (SR<7:5>) to form the CPU Interrupt Priority Level.

© 2013-2015 Microchip Technology Inc.

REGISTER 7-3: INTCON1: INTERRUPT CONTROL REGISTER 1

R/W-0	R/W-0	R/W-0	R/W-0	R/W-0	R/W-0	R/W-0	R/W-0
NSTDIS	OVAERR	OVBERR	COVAERR	COVBERR	OVATE	OVBTE	COVTE
bit 15							bit 8

R/W-0	R/W-0	U-0	R/W-0	R/W-0	R/W-0	R/W-0	U-0
SFTACERR	DIV0ERR	—	MATHERR	ADDRERR	STKERR	OSCFAIL	—
bit 7							bit 0

Legend:			
R = Readable bit	W = Writable bit	U = Unimplemented bit, read as ‘0’	
-n = Value at POR	‘1’ = Bit is set	‘0’ = Bit is cleared	x = Bit is unknown

bit 15 **NSTDIS:** Interrupt Nesting Disable bit
1 = Interrupt nesting is disabled
0 = Interrupt nesting is enabled

bit 14 **OVAERR:** Accumulator A Overflow Trap Flag bit
1 = Trap was caused by overflow of Accumulator A
0 = Trap was not caused by overflow of Accumulator A

bit 13 **OVBERR:** Accumulator B Overflow Trap Flag bit
1 = Trap was caused by overflow of Accumulator B
0 = Trap was not caused by overflow of Accumulator B

bit 12 **COVAERR:** Accumulator A Catastrophic Overflow Trap Flag bit
1 = Trap was caused by catastrophic overflow of Accumulator A
0 = Trap was not caused by catastrophic overflow of Accumulator A

bit 11 **COVBERR:** Accumulator B Catastrophic Overflow Trap Flag bit
1 = Trap was caused by catastrophic overflow of Accumulator B
0 = Trap was not caused by catastrophic overflow of Accumulator B

bit 10 **OVATE:** Accumulator A Overflow Trap Enable bit
1 = Trap overflow of Accumulator A
0 = Trap is disabled

bit 9 **OVBTE:** Accumulator B Overflow Trap Enable bit
1 = Trap overflow of Accumulator B
0 = Trap is disabled

bit 8 **COVTE:** Catastrophic Overflow Trap Enable bit
1 = Trap on catastrophic overflow of Accumulator A or B is enabled
0 = Trap is disabled

bit 7 **SFTACERR:** Shift Accumulator Error Status bit
1 = Math error trap was caused by an invalid accumulator shift
0 = Math error trap was not caused by an invalid accumulator shift

bit 6 **DIV0ERR:** Divide-by-Zero Error Status bit
1 = Math error trap was caused by a divide-by-zero
0 = Math error trap was not caused by a divide-by-zero

bit 5 **Unimplemented:** Read as ‘0’

bit 4 **MATHERR:** Math Error Status bit
1 = Math error trap has occurred
0 = Math error trap has not occurred

bit 3 **ADDRERR:** Address Error Trap Status bit
1 = Address error trap has occurred
0 = Address error trap has not occurred

REGISTER 7-3: INTCON1: INTERRUPT CONTROL REGISTER 1 (CONTINUED)

bit 2	**STKERR:** Stack Error Trap Status bit 1 = Stack error trap has occurred 0 = Stack error trap has not occurred
bit 1	**OSCFAIL:** Oscillator Failure Trap Status bit 1 = Oscillator failure trap has occurred 0 = Oscillator failure trap has not occurred
bit 0	**Unimplemented:** Read as '0'

© 2013-2015 Microchip Technology Inc.

REGISTER 7-4: INTCON2: INTERRUPT CONTROL REGISTER 2

R/W-1	R/W-0	R/W-0	U-0	U-0	U-0	U-0	R/W-0
GIE	DISI	SWTRAP	—	—	—	—	AIVTEN
bit 15							bit 8

U-0	U-0	U-0	R/W-0	U-0	R/W-0	R/W-0	R/W-0
—	—	—	INT4EP	—	INT2EP	INT1EP	INT0EP
bit 7							bit 0

Legend:			
R = Readable bit	W = Writable bit	U = Unimplemented bit, read as ‘0’	
-n = Value at POR	‘1’ = Bit is set	‘0’ = Bit is cleared	x = Bit is unknown

bit 15 **GIE:** Global Interrupt Enable bit
1 = Interrupts and associated IE bits are enabled
0 = Interrupts are disabled, but traps are still enabled

bit 14 **DISI:** DISI Instruction Status bit
1 = DISI instruction is active
0 = DISI instruction is not active

bit 13 **SWTRAP:** Software Trap Status bit
1 = Software trap is enabled
0 = Software trap is disabled

bit 12-9 **Unimplemented:** Read as ‘0’

bit 8 **AIVTEN:** Alternate Interrupt Vector Table Enable
1 = Uses Alternate Interrupt Vector Table
0 = Uses standard Interrupt Vector Table

bit 7-5 **Unimplemented:** Read as ‘0’

bit 4 **INT4EP:** External Interrupt 4 Edge Detect Polarity Select bit
1 = Interrupt on negative edge
0 = Interrupt on positive edge

bit 3 **Unimplemented:** Read as ‘0’

bit 2 **INT2EP:** External Interrupt 2 Edge Detect Polarity Select bit
1 = Interrupt on negative edge
0 = Interrupt on positive edge

bit 1 **INT1EP:** External Interrupt 1 Edge Detect Polarity Select bit
1 = Interrupt on negative edge
0 = Interrupt on positive edge

bit 0 **INT0EP:** External Interrupt 0 Edge Detect Polarity Select bit
1 = Interrupt on negative edge
0 = Interrupt on positive edge

REGISTER 7-5: INTCON3: INTERRUPT CONTROL REGISTER 3

U-0	U-0	U-0	U-0	U-0	U-0	U-0	R/W-0
—	—	—	—	—	—	—	NAE
bit 15							bit 8

U-0	U-0	U-0	R/W-0	U-0	U-0	U-0	R/W-0
—	—	—	DOOVR	—	—	—	APLL
bit 7							bit 0

Legend:			
R = Readable bit	W = Writable bit	U = Unimplemented bit, read as ‘0’	
-n = Value at POR	‘1’ = Bit is set	‘0’ = Bit is cleared	x = Bit is unknown

bit 15-9 **Unimplemented:** Read as ‘0’

bit 8 **NAE:** NVM Address Error Soft Trap Status bit
1 = NVM address error soft trap has occurred
0 = NVM address error soft trap has not occurred

bit 7-5 **Unimplemented:** Read as ‘0’

bit 4 **DOOVR:** DO Stack Overflow Soft Trap Status bit
1 = DO stack overflow soft trap has occurred
0 = DO stack overflow soft trap has not occurred

bit 3-1 **Unimplemented:** Read as ‘0’

bit 0 **APLL:** Auxiliary PLL Loss of Lock Soft Trap Status bit
1 = APLL lock soft trap has occurred
0 = APLL lock soft trap has not occurred

REGISTER 7-6: INTCON4: INTERRUPT CONTROL REGISTER 4

U-0	U-0	U-0	U-0	U-0	U-0	U-0	U-0
—	—	—	—	—	—	—	—
bit 15							bit 8

U-0	U-0	U-0	U-0	U-0	U-0	U-0	R/W-0
—	—	—	—	—	—	—	SGHT
bit 7							bit 0

Legend:			
R = Readable bit	W = Writable bit	U = Unimplemented bit, read as ‘0’	
-n = Value at POR	‘1’ = Bit is set	‘0’ = Bit is cleared	x = Bit is unknown

bit 15-1 **Unimplemented:** Read as ‘0’

bit 0 **SGHT:** Software Generated Hard Trap Status bit
1 = Software generated hard trap has occurred
0 = Software generated hard trap has not occurred

© 2013-2015 Microchip Technology Inc.

REGISTER 7-7: INTTREG: INTERRUPT CONTROL AND STATUS REGISTER

U-0	U-0	U-0	U-0	R-0	R-0	R-0	R-0
—	—	—	—	ILR3	ILR2	ILR1	ILR0
bit 15							bit 8

R-0	R-0	R-0	R-0	R-0	R-0	R-0	R-0
VECNUM7	VECNUM6	VECNUM5	VECNUM4	VECNUM3	VECNUM2	VECNUM1	VECNUM0
bit 7							bit 0

Legend:			
R = Readable bit	W = Writable bit	U = Unimplemented bit, read as ‘0’	
-n = Value at POR	‘1’ = Bit is set	‘0’ = Bit is cleared	x = Bit is unknown

bit 15-12 **Unimplemented:** Read as ‘0’

bit 11-8 **ILR<3:0>:** New CPU Interrupt Priority Level bits
1111 = CPU Interrupt Priority Level is 15
•
•
•
0001 = CPU Interrupt Priority Level is 1
0000 = CPU Interrupt Priority Level is 0

bit 7-0 **VECNUM<7:0>:** Vector Number of Pending Interrupt bits
11111111 = 255, Reserved; do not use
•
•
•
00001001 = 9, IC1 – Input Capture 1
00001000 = 8, INT0 – External Interrupt 0
00000111 = 7, Reserved; do not use
00000110 = 6, Generic soft error trap
00000101 = 5, Reserved; do not use
00000100 = 4, Math error trap
00000011 = 3, Stack error trap
00000010 = 2, Generic hard trap
00000001 = 1, Address error trap
00000000 = 0, Oscillator fail trap

NOTES:

© 2013-2015 Microchip Technology Inc.

8.0 OSCILLATOR CONFIGURATION

Note 1: This data sheet summarizes the features of the dsPIC33EPXXGS50X family of devices. It is not intended to be a comprehensive reference source. To complement the information in this data sheet, refer to **"Oscillator Module"** (DS70005131) in the *"dsPIC33/PIC24 Family Reference Manual"*, which is available from the Microchip web site (www.microchip.com).

2: Some registers and associated bits described in this section may not be available on all devices. Refer to **Section 4.0 "Memory Organization"** in this data sheet for device-specific register and bit information.

The dsPIC33EPXXGS50X family oscillator system provides:

- On-chip Phase-Locked Loop (PLL) to boost internal operating frequency on select internal and external oscillator sources
- On-the-fly clock switching between various clock sources
- Doze mode for system power savings
- Fail-Safe Clock Monitor (FSCM) that detects clock failure and permits safe application recovery or shutdown
- Configuration bits for clock source selection
- Auxiliary PLL for ADC and PWM

A simplified diagram of the oscillator system is shown in Figure 8-1.

FIGURE 8-1: OSCILLATOR SYSTEM DIAGRAM

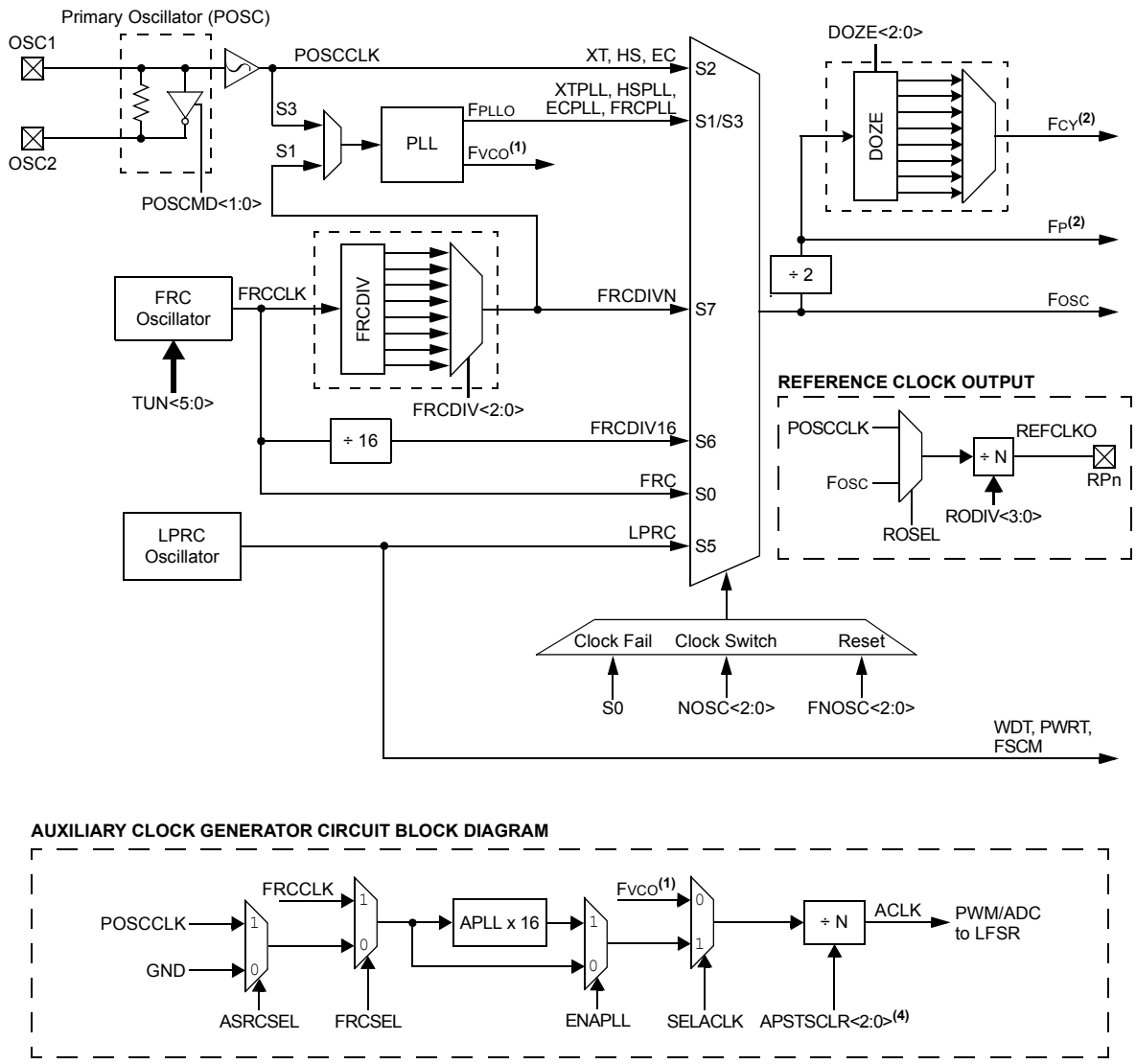

Note 1: See Figure 8-2 for the source of the FVCO signal.

2: FP refers to the clock source for all the peripherals, while FCY (or MIPS) refers to the clock source for the CPU. Throughout this document, FCY and FP are used interchangeably, except in the case of Doze mode. FP and FCY will be different when Doze mode is used in any ratio other than 1:1.

3: The auxiliary clock postscaler must be configured to divide-by-1 (APSTSCLR<2:0> = `111`) for proper operation of the PWM and ADC modules.

© 2013-2015 Microchip Technology Inc.

8.1 CPU Clocking System

The dsPIC33EPXXGS50X family of devices provides six system clock options:

- Fast RC (FRC) Oscillator
- FRC Oscillator with Phase-Locked Loop (PLL)
- FRC Oscillator with Postscaler
- Primary (XT, HS or EC) Oscillator
- Primary Oscillator with PLL
- Low-Power RC (LPRC) Oscillator

Instruction execution speed or device operating frequency, FCY, is given by Equation 8-1.

EQUATION 8-1: DEVICE OPERATING FREQUENCY

$$F_{CY} = F_{OSC}/2$$

Figure 8-2 is a block diagram of the PLL module. Equation 8-2 provides the relationship between Input Frequency (FIN) and Output Frequency (FPLLO). Equation 8-3 provides the relationship between Input Frequency (FIN) and VCO Frequency (FVCO).

FIGURE 8-2: PLL BLOCK DIAGRAM

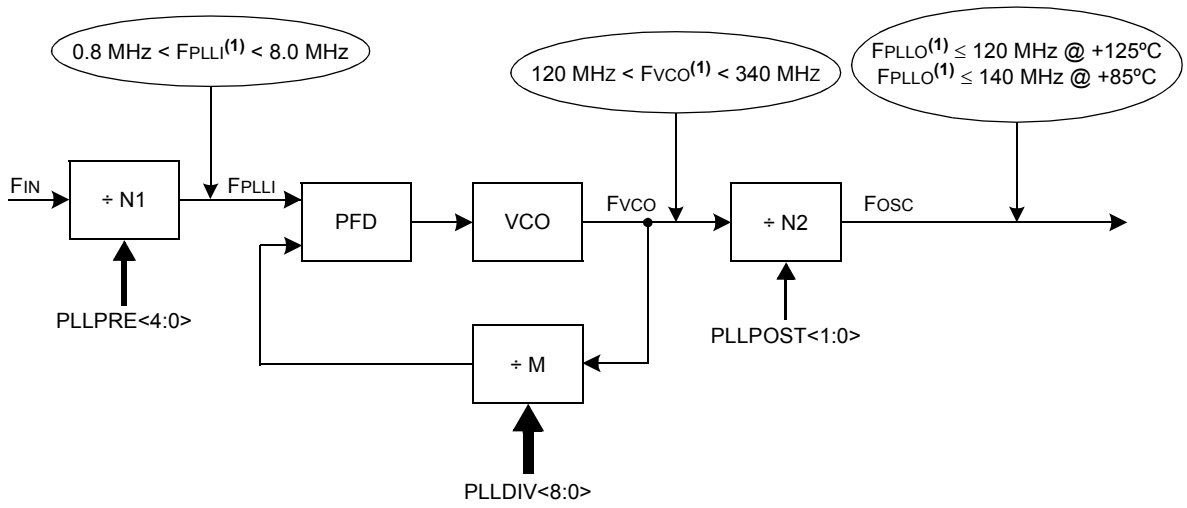

Note 1: This frequency range must be met at all times.

EQUATION 8-2: FPLLO CALCULATION

$$F_{PLLO} = F_{IN} \times \left(\frac{M}{N1 \times N2}\right) = F_{IN} \times \left(\frac{PLLDIV<8:0> + 2}{(PLLPRE<4:0> + 2) \times 2(PLLPOST<1:0> + 1)}\right)$$

Where:

$N1 = PLLPRE<4:0> + 2$

$N2 = 2 \text{ x } (PLLPOST<1:0> + 1)$

$M = PLLDIV<8:0> + 2$

EQUATION 8-3: FVCO CALCULATION

$$F_{VCO} = F_{IN} \times \left(\frac{M}{N1}\right) = F_{IN} \times \left(\frac{PLLDIV<8:0> + 2}{(PLLPRE<4:0> + 2)}\right)$$

TABLE 8-1: CONFIGURATION BIT VALUES FOR CLOCK SELECTION

Oscillator Mode	Oscillator Source	POSCMD<1:0>	FNOSC<2:0>	See Notes
Fast RC Oscillator with Divide-by-n (FRCDIVN)	Internal	xx	111	1, 2
Fast RC Oscillator with Divide-by-16	Internal	xx	110	1
Low-Power RC Oscillator (LPRC)	Internal	xx	101	1
Primary Oscillator (HS) with PLL (HSPLL)	Primary	10	011	
Primary Oscillator (XT) with PLL (XTPLL)	Primary	01	011	
Primary Oscillator (EC) with PLL (ECPLL)	Primary	00	011	1
Primary Oscillator (HS)	Primary	10	010	
Primary Oscillator (XT)	Primary	01	010	
Primary Oscillator (EC)	Primary	00	010	1
Fast RC Oscillator (FRC) with Divide-by-N and PLL (FRCPLL)	Internal	xx	001	1
Fast RC Oscillator (FRC)	Internal	xx	000	1

Note 1: OSC2 pin function is determined by the OSCIOFNC Configuration bit.

2: This is the default oscillator mode for an unprogrammed (erased) device.

8.2 Auxiliary Clock Generation

The auxiliary clock generation is used for peripherals that need to operate at a frequency unrelated to the system clock, such as PWM or ADC.

The primary oscillator and internal FRC oscillator sources can be used with an Auxiliary PLL (APLL) to obtain the auxiliary clock. The Auxiliary PLL has a fixed 16x multiplication factor.

The auxiliary clock has the following configuration restrictions:

- For proper PWM operation, auxiliary clock generation must be configured for 120 MHz (see Parameter OS56 in **Section 26.0 "Electrical Characteristics"**). If a slower frequency is desired, the PWM Input Clock Prescaler (Divider) Select bits (PCLKDIV<2:0>) should be used.
- To achieve 1.04 ns PWM resolution, the auxiliary clock must use the 16x Auxiliary PLL (APLL). All other clock sources will have a minimum PWM resolution of 8 ns.
- If the primary PLL is used as a source for the auxiliary clock, the primary PLL should be configured up to a maximum operation of 30 MIPS or less.

8.3 Reference Clock Generation

The reference clock output logic provides the user with the ability to output a clock signal based on the system clock or the crystal oscillator on a device pin. The user application can specify a wide range of clock scaling prior to outputting the reference clock.

8.4 Oscillator Resources

Many useful resources are provided on the main product page of the Microchip web site for the devices listed in this data sheet. This product page contains the latest updates and additional information.

8.4.1 KEY RESOURCES

- Code Samples
- Application Notes
- Software Libraries
- Webinars
- All Related *"dsPIC33/PIC24 Family Reference Manual"* Sections
- Development Tools

© 2013-2015 Microchip Technology Inc.

8.5 Oscillator Control Registers

REGISTER 8-1: OSCCON: OSCILLATOR CONTROL REGISTER(1)

U-0	R-0	R-0	R-0	U-0	R/W-y	R/W-y	R/W-y
—	COSC2	COSC1	COSC0	—	NOSC2(2)	NOSC1(2)	NOSC0(2)
bit 15							bit 8

R/W-0	R/W-0	R-0	U-0	R/W-0	U-0	U-0	R/W-0
CLKLOCK	IOLOCK	LOCK	—	CF(3)	—	—	OSWEN
bit 7							bit 0

Legend:	y = Value set from Configuration bits on POR		
R = Readable bit	W = Writable bit	U = Unimplemented bit, read as ‘0’	
-n = Value at POR	‘1’ = Bit is set	‘0’ = Bit is cleared	x = Bit is unknown

bit 15 **Unimplemented:** Read as ‘0’

bit 14-12 **COSC<2:0>:** Current Oscillator Selection bits (read-only)
111 = Fast RC Oscillator (FRC) with Divide-by-n
110 = Fast RC Oscillator (FRC) with Divide-by-16
101 = Low-Power RC Oscillator (LPRC)
100 = Reserved
011 = Primary Oscillator (XT, HS, EC) with PLL
010 = Primary Oscillator (XT, HS, EC)
001 = Fast RC Oscillator (FRC) with Divide-by-N and PLL (FRCPLL)
000 = Fast RC Oscillator (FRC)

bit 11 **Unimplemented:** Read as ‘0’

bit 10-8 **NOSC<2:0>:** New Oscillator Selection bits(2)
111 = Fast RC Oscillator (FRC) with Divide-by-n
110 = Fast RC Oscillator (FRC) with Divide-by-16
101 = Low-Power RC Oscillator (LPRC)
100 = Reserved
011 = Primary Oscillator (XT, HS, EC) with PLL
010 = Primary Oscillator (XT, HS, EC)
001 = Fast RC Oscillator (FRC) with Divide-by-N and PLL (FRCPLL)
000 = Fast RC Oscillator (FRC)

bit 7 **CLKLOCK:** Clock Lock Enable bit
1 = If (FCKSM0 = 1), then clock and PLL configurations are locked; if (FCKSM0 = 0), then clock and PLL configurations may be modified
0 = Clock and PLL selections are not locked, configurations may be modified

bit 6 **IOLOCK:** I/O Lock Enable bit
1 = I/O lock is active
0 = I/O lock is not active

bit 5 **LOCK:** PLL Lock Status bit (read-only)
1 = Indicates that PLL is in lock or PLL start-up timer is satisfied
0 = Indicates that PLL is out of lock, start-up timer is in progress or PLL is disabled

Note 1: Writes to this register require an unlock sequence.

2: Direct clock switches between any primary oscillator mode with PLL and FRCPLL mode are not permitted. This applies to clock switches in either direction. In these instances, the application must switch to FRC mode as a transitional clock source between the two PLL modes.

3: This bit should only be cleared in software. Setting the bit in software (= 1) will have the same effect as an actual oscillator failure and will trigger an oscillator failure trap.

REGISTER 8-1: OSCCON: OSCILLATOR CONTROL REGISTER(1) (CONTINUED)

bit 4 **Unimplemented:** Read as '0'

bit 3 **CF:** Clock Fail Detect bit(3)
1 = FSCM has detected a clock failure
0 = FSCM has not detected a clock failure

bit 2-1 **Unimplemented:** Read as '0'

bit 0 **OSWEN:** Oscillator Switch Enable bit
1 = Requests oscillator switch to the selection specified by the NOSC<2:0> bits
0 = Oscillator switch is complete

Note 1: Writes to this register require an unlock sequence.

2: Direct clock switches between any primary oscillator mode with PLL and FRCPLL mode are not permitted. This applies to clock switches in either direction. In these instances, the application must switch to FRC mode as a transitional clock source between the two PLL modes.

3: This bit should only be cleared in software. Setting the bit in software (= 1) will have the same effect as an actual oscillator failure and will trigger an oscillator failure trap.

© 2013-2015 Microchip Technology Inc.

REGISTER 8-2: CLKDIV: CLOCK DIVISOR REGISTER

R/W-0	R/W-0	R/W-1	R/W-1	R/W-0	R/W-0	R/W-0	R/W-0
ROI	DOZE2(1)	DOZE1(1)	DOZE0(1)	DOZEN(2,3)	FRCDIV2	FRCDIV1	FRCDIV0
bit 15							bit 8

R/W-0	R/W-1	U-0	R/W-0	R/W-0	R/W-0	R/W-0	R/W-0
PLLPOST1	PLLPOST0	—	PLLPRE4	PLLPRE3	PLLPRE2	PLLPRE1	PLLPRE0
bit 7							bit 0

Legend:			
R = Readable bit	W = Writable bit	U = Unimplemented bit, read as ‘0’	
-n = Value at POR	‘1’ = Bit is set	‘0’ = Bit is cleared	x = Bit is unknown

bit 15 **ROI:** Recover on Interrupt bit
1 = Interrupts will clear the DOZEN bit and the processor clock, and the peripheral clock ratio is set to 1:1
0 = Interrupts have no effect on the DOZEN bit

bit 14-12 **DOZE<2:0>:** Processor Clock Reduction Select bits(1)
111 = FCY divided by 128
110 = FCY divided by 64
101 = FCY divided by 32
100 = FCY divided by 16
011 = FCY divided by 8 (default)
010 = FCY divided by 4
001 = FCY divided by 2
000 = FCY divided by 1

bit 11 **DOZEN:** Doze Mode Enable bit(2,3)
1 = DOZE<2:0> field specifies the ratio between the peripheral clocks and the processor clocks
0 = Processor clock and peripheral clock ratio is forced to 1:1

bit 10-8 **FRCDIV<2:0>:** Internal Fast RC Oscillator Postscaler bits
111 = FRC divided by 256
110 = FRC divided by 64
101 = FRC divided by 32
100 = FRC divided by 16
011 = FRC divided by 8
010 = FRC divided by 4
001 = FRC divided by 2
000 = FRC divided by 1 (default)

bit 7-6 **PLLPOST<1:0>:** PLL VCO Output Divider Select bits (also denoted as ‘N2’, PLL postscaler)
11 = Output divided by 8
10 = Reserved
01 = Output divided by 4 (default)
00 = Output divided by 2

bit 5 **Unimplemented:** Read as ‘0’

Note 1: The DOZE<2:0> bits can only be written to when the DOZEN bit is clear. If DOZEN = 1, any writes to DOZE<2:0> are ignored.
2: This bit is cleared when the ROI bit is set and an interrupt occurs.
3: The DOZEN bit cannot be set if DOZE<2:0> = 000. If DOZE<2:0> = 000, any attempt by user software to set the DOZEN bit is ignored.

REGISTER 8-2: CLKDIV: CLOCK DIVISOR REGISTER (CONTINUED)

bit 4-0 **PLLPRE<4:0>:** PLL Phase Detector Input Divider Select bits (also denoted as ‘N1’, PLL prescaler)
`11111` = Input divided by 33
•
•
•
`00001` = Input divided by 3
`00000` = Input divided by 2 (default)

Note 1: The DOZE<2:0> bits can only be written to when the DOZEN bit is clear. If DOZEN = `1`, any writes to DOZE<2:0> are ignored.
2: This bit is cleared when the ROI bit is set and an interrupt occurs.
3: The DOZEN bit cannot be set if DOZE<2:0> = `000`. If DOZE<2:0> = `000`, any attempt by user software to set the DOZEN bit is ignored.

REGISTER 8-3: PLLFBD: PLL FEEDBACK DIVISOR REGISTER

U-0	U-0	U-0	U-0	U-0	U-0	U-0	R/W-0
—	—	—	—	—	—	—	PLLDIV8
bit 15							bit 8

R/W-0	R/W-0	R/W-1	R/W-1	R/W-0	R/W-0	R/W-0	R/W-0
PLLDIV<7:0>							
bit 7							bit 0

Legend:			
R = Readable bit	W = Writable bit	U = Unimplemented bit, read as ‘0’	
-n = Value at POR	‘1’ = Bit is set	‘0’ = Bit is cleared	x = Bit is unknown

bit 15-9 **Unimplemented:** Read as ‘`0`’
bit 8-0 **PLLDIV<8:0>:** PLL Feedback Divisor bits (also denoted as ‘M’, PLL multiplier)
`111111111` = 513
•
•
•
`000110000` = 50 (default)
•
•
•
`000000010` = 4
`000000001` = 3
`000000000` = 2

© 2013-2015 Microchip Technology Inc.

REGISTER 8-4: OSCTUN: FRC OSCILLATOR TUNING REGISTER

U-0	U-0	U-0	U-0	U-0	U-0	U-0	U-0
—	—	—	—	—	—	—	—
bit 15							bit 8

U-0	U-0	R/W-0	R/W-0	R/W-0	R/W-0	R/W-0	R/W-0
—	—	TUN<5:0>					
bit 7							bit 0

Legend:			
R = Readable bit	W = Writable bit	U = Unimplemented bit, read as ‘0’	
-n = Value at POR	‘1’ = Bit is set	‘0’ = Bit is cleared	x = Bit is unknown

bit 15-6 **Unimplemented:** Read as ‘0’

bit 5-0 **TUN<5:0>:** FRC Oscillator Tuning bits

011111 = Maximum frequency deviation of 1.457% (7.477 MHz)
011110 = Center frequency + 1.41% (7.474 MHz)
•
•
•
000001 = Center frequency + 0.047% (7.373 MHz)
000000 = Center frequency (7.37 MHz nominal)
111111 = Center frequency – 0.047% (7.367 MHz)
•
•
•
100001 = Center frequency – 1.457% (7.263 MHz)
100000 = Minimum frequency deviation of -1.5% (7.259 MHz)

REGISTER 8-5: ACLKCON: AUXILIARY CLOCK DIVISOR CONTROL REGISTER

R/W-0	R-0	R/W-1	U-0	U-0	R/W-1	R/W-1	R/W-1
ENAPLL	APLLCK	SELACLK	—	—	APSTSCLR2	APSTSCLR1	APSTSCLR0
bit 15							bit 8

R/W-0	R/W-0	U-0	U-0	U-0	U-0	U-0	U-0
ASRCSEL	FRCSEL	—	—	—	—	—	—
bit 7							bit 0

Legend:			
R = Readable bit	W = Writable bit	U = Unimplemented bit, read as ‘0’	
-n = Value at POR	‘1’ = Bit is set	‘0’ = Bit is cleared	x = Bit is unknown

bit 15 **ENAPLL:** Auxiliary PLL Enable bit
1 = APLL is enabled
0 = APLL is disabled

bit 14 **APLLCK:** APLL Locked Status bit (read-only)
1 = Indicates that Auxiliary PLL is in lock
0 = Indicates that Auxiliary PLL is not in lock

bit 13 **SELACLK:** Select Auxiliary Clock Source for Auxiliary Clock Divider bit
1 = Auxiliary oscillators provide the source clock for the auxiliary clock divider
0 = Primary PLL (FVCO) provides the source clock for the auxiliary clock divider

bit 12-11 **Unimplemented:** Read as ‘0’

bit 10-8 **APSTSCLR<2:0>:** Auxiliary Clock Output Divider bits
111 = Divided by 1
110 = Divided by 2
101 = Divided by 4
100 = Divided by 8
011 = Divided by 16
010 = Divided by 32
001 = Divided by 64
000 = Divided by 256

bit 7 **ASRCSEL:** Select Reference Clock Source for Auxiliary Clock bit
1 = Primary oscillator is the clock source
0 = No clock input is selected

bit 6 **FRCSEL:** Select Reference Clock Source for Auxiliary PLL bit
1 = Selects the FRC clock for Auxiliary PLL
0 = Input clock source is determined by the ASRCSEL bit setting

bit 5-0 **Unimplemented:** Read as ‘0’

© 2013-2015 Microchip Technology Inc.

REGISTER 8-6: REFOCON: REFERENCE OSCILLATOR CONTROL REGISTER

R/W-0	U-0	R/W-0	R/W-0	R/W-0	R/W-0	R/W-0	R/W-0
ROON	—	ROSSLP	ROSEL	RODIV3(1)	RODIV2(1)	RODIV1(1)	RODIV0(1)
bit 15							bit 8

U-0	U-0	U-0	U-0	U-0	U-0	U-0	U-0
—	—	—	—	—	—	—	—
bit 7							bit 0

Legend:			
R = Readable bit	W = Writable bit	U = Unimplemented bit, read as ‘0’	
-n = Value at POR	‘1’ = Bit is set	‘0’ = Bit is cleared	x = Bit is unknown

bit 15 **ROON:** Reference Oscillator Output Enable bit
1 = Reference oscillator output is enabled on the RPn pin(2)
0 = Reference oscillator output is disabled

bit 14 **Unimplemented:** Read as ‘0’

bit 13 **ROSSLP:** Reference Oscillator Run in Sleep bit
1 = Reference oscillator output continues to run in Sleep
0 = Reference oscillator output is disabled in Sleep

bit 12 **ROSEL:** Reference Oscillator Source Select bit
1 = Oscillator crystal is used as the reference clock
0 = System clock is used as the reference clock

bit 11-8 **RODIV<3:0>:** Reference Oscillator Divider bits(1)
1111 = Reference clock divided by 32,768
1110 = Reference clock divided by 16,384
1101 = Reference clock divided by 8,192
1100 = Reference clock divided by 4,096
1011 = Reference clock divided by 2,048
1010 = Reference clock divided by 1,024
1001 = Reference clock divided by 512
1000 = Reference clock divided by 256
0111 = Reference clock divided by 128
0110 = Reference clock divided by 64
0101 = Reference clock divided by 32
0100 = Reference clock divided by 16
0011 = Reference clock divided by 8
0010 = Reference clock divided by 4
0001 = Reference clock divided by 2
0000 = Reference clock

bit 7-0 **Unimplemented:** Read as ‘0’

Note 1: The reference oscillator output must be disabled (ROON = 0) before writing to these bits.
2: This pin is remappable. See **Section 10.4 “Peripheral Pin Select (PPS)”** for more information.

REGISTER 8-7: LFSR: LINEAR FEEDBACK SHIFT REGISTER

U-0	R/W-0	R/W-0	R/W-0	R/W-0	R/W-0	R/W-0	R/W-0
—	LFSR<14:8>						
bit 15							bit 8

R/W-0	R/W-0	R/W-0	R/W-0	R/W-0	R/W-0	R/W-0	R/W-0
LFSR<7:0>							
bit 7							bit 0

Legend:			
R = Readable bit	W = Writable bit	U = Unimplemented bit, read as ‘0’	
-n = Value at POR	‘1’ = Bit is set	‘0’ = Bit is cleared	x = Bit is unknown

bit 15 **Unimplemented:** Read as ‘0’

bit 14-0 **LFSR<14:0>:** Pseudorandom Data bits

© 2013-2015 Microchip Technology Inc.

9.0 POWER-SAVING FEATURES

Note 1: This data sheet summarizes the features of the dsPIC33EPXXGS50X family of devices. It is not intended to be a comprehensive reference source. To complement the information in this data sheet, refer to **"Watchdog Timer and Power-Saving Modes"** (DS70615) in the "*dsPIC33/PIC24 Family Reference Manual*", which is available from the Microchip web site (www.microchip.com).

2: Some registers and associated bits described in this section may not be available on all devices. Refer to **Section 4.0 "Memory Organization"** in this data sheet for device-specific register and bit information.

The dsPIC33EPXXGS50X family devices provide the ability to manage power consumption by selectively managing clocking to the CPU and the peripherals. In general, a lower clock frequency and a reduction in the number of peripherals being clocked constitutes lower consumed power.

dsPIC33EPXXGS50X family devices can manage power consumption in four ways:

- Clock Frequency
- Instruction-Based Sleep and Idle modes
- Software-Controlled Doze mode
- Selective Peripheral Control in Software

Combinations of these methods can be used to selectively tailor an application's power consumption while still maintaining critical application features, such as timing-sensitive communications.

9.1 Clock Frequency and Clock Switching

The dsPIC33EPXXGS50X family devices allow a wide range of clock frequencies to be selected under application control. If the system clock configuration is not locked, users can choose low-power or high-precision oscillators by simply changing the NOSCx bits (OSCCON<10:8>). The process of changing a system clock during operation, as well as limitations to the process, are discussed in more detail in **Section 8.0 "Oscillator Configuration"**.

9.2 Instruction-Based Power-Saving Modes

The dsPIC33EPXXGS50X family devices have two special power-saving modes that are entered through the execution of a special `PWRSAV` instruction. Sleep mode stops clock operation and halts all code execution. Idle mode halts the CPU and code execution, but allows peripheral modules to continue operation. The assembler syntax of the `PWRSAV` instruction is shown in Example 9-1.

Note: `SLEEP_MODE` and `IDLE_MODE` are constants defined in the assembler include file for the selected device.

Sleep and Idle modes can be exited as a result of an enabled interrupt, WDT time-out or a device Reset. When the device exits these modes, it is said to "wake-up".

EXAMPLE 9-1: `PWRSAV` INSTRUCTION SYNTAX

```
PWRSAV  #SLEEP_MODE    ; Put the device into Sleep mode
PWRSAV  #IDLE_MODE     ; Put the device into Idle mode
```

9.2.1 SLEEP MODE

The following occurs in Sleep mode:

- The system clock source is shut down. If an on-chip oscillator is used, it is turned off.
- The device current consumption is reduced to a minimum, provided that no I/O pin is sourcing current.
- The Fail-Safe Clock Monitor does not operate, since the system clock source is disabled.
- The LPRC clock continues to run in Sleep mode if the WDT is enabled.
- The WDT, if enabled, is automatically cleared prior to entering Sleep mode.
- Some device features or peripherals can continue to operate. This includes items such as the Input Change Notification on the I/O ports or peripherals that use an external clock input.
- Any peripheral that requires the system clock source for its operation is disabled.

The device wakes up from Sleep mode on any of the these events:

- Any interrupt source that is individually enabled
- Any form of device Reset
- A WDT time-out

On wake-up from Sleep mode, the processor restarts with the same clock source that was active when Sleep mode was entered.

For optimal power savings, the internal regulator and the Flash regulator can be configured to go into stand-by when Sleep mode is entered by clearing the VREGS (RCON<8>) and VREGSF (RCON<11>) bits (default configuration).

If the application requires a faster wake-up time, and can accept higher current requirements, the VREGS (RCON<8>) and VREGSF (RCON<11>) bits can be set to keep the internal regulator and the Flash regulator active during Sleep mode.

9.2.2 IDLE MODE

The following occurs in Idle mode:

- The CPU stops executing instructions.
- The WDT is automatically cleared.
- The system clock source remains active. By default, all peripheral modules continue to operate normally from the system clock source, but can also be selectively disabled (see **Section 9.4 “Peripheral Module Disable”**).
- If the WDT or FSCM is enabled, the LPRC also remains active.

The device wakes from Idle mode on any of these events:

- Any interrupt that is individually enabled
- Any device Reset
- A WDT time-out

On wake-up from Idle mode, the clock is reapplied to the CPU and instruction execution will begin (2-4 clock cycles later), starting with the instruction following the `PWRSAV` instruction or the first instruction in the ISR.

All peripherals also have the option to discontinue operation when Idle mode is entered to allow for increased power savings. This option is selectable in the control register of each peripheral (for example, the TSIDL bit in the Timer1 Control register (T1CON<13>).

9.2.3 INTERRUPTS COINCIDENT WITH POWER SAVE INSTRUCTIONS

Any interrupt that coincides with the execution of a `PWRSAV` instruction is held off until entry into Sleep or Idle mode has completed. The device then wakes up from Sleep or Idle mode.

© 2013-2015 Microchip Technology Inc.

9.3 Doze Mode

The preferred strategies for reducing power consumption are changing clock speed and invoking one of the power-saving modes. In some circumstances, this cannot be practical. For example, it may be necessary for an application to maintain uninterrupted synchronous communication, even while it is doing nothing else. Reducing system clock speed can introduce communication errors, while using a power-saving mode can stop communications completely.

Doze mode is a simple and effective alternative method to reduce power consumption while the device is still executing code. In this mode, the system clock continues to operate from the same source and at the same speed. Peripheral modules continue to be clocked at the same speed, while the CPU clock speed is reduced. Synchronization between the two clock domains is maintained, allowing the peripherals to access the SFRs while the CPU executes code at a slower rate.

Doze mode is enabled by setting the DOZEN bit (CLKDIV<11>). The ratio between peripheral and core clock speed is determined by the DOZE<2:0> bits (CLKDIV<14:12>). There are eight possible configurations, from 1:1 to 1:128, with 1:1 being the default setting.

Programs can use Doze mode to selectively reduce power consumption in event-driven applications. This allows clock-sensitive functions, such as synchronous communications, to continue without interruption while the CPU Idles, waiting for something to invoke an interrupt routine. An automatic return to full-speed CPU operation on interrupts can be enabled by setting the ROI bit (CLKDIV<15>). By default, interrupt events have no effect on Doze mode operation.

9.4 Peripheral Module Disable

The Peripheral Module Disable (PMD) registers provide a method to disable a peripheral module by stopping all clock sources supplied to that module. When a peripheral is disabled using the appropriate PMD control bit, the peripheral is in a minimum power consumption state. The control and status registers associated with the peripheral are also disabled, so writes to those registers do not have any effect and read values are invalid.

A peripheral module is enabled only if both the associated bit in the PMD register is cleared and the peripheral is supported by the specific dsPIC® DSC variant. If the peripheral is present in the device, it is enabled in the PMD register by default.

Note:	If a PMD bit is set, the corresponding module is disabled after a delay of one instruction cycle. Similarly, if a PMD bit is cleared, the corresponding module is enabled after a delay of one instruction cycle (assuming the module control registers are already configured to enable module operation).

9.5 Power-Saving Resources

Many useful resources are provided on the main product page of the Microchip web site for the devices listed in this data sheet. This product page contains the latest updates and additional information.

9.5.1 KEY RESOURCES

- **"Watchdog Timer and Power-Saving Modes"** (DS70615) in the *"dsPIC33/PIC24 Family Reference Manual"*
- Code Samples
- Application Notes
- Software Libraries
- Webinars
- All related *"dsPIC33/PIC24 Family Reference Manual"* Sections
- Development Tools

REGISTER 9-1: PMD1: PERIPHERAL MODULE DISABLE CONTROL REGISTER 1

R/W-0	R/W-0	R/W-0	R/W-0	R/W-0	U-0	R/W-0	U-0
T5MD	T4MD	T3MD	T2MD	T1MD	—	PWMMD	—
bit 15							bit 8

R/W-0	R/W-0	R/W-0	R/W-0	R/W-0	U-0	U-0	R/W-0
I2C1MD	U2MD	U1MD	SPI2MD	SPI1MD	—	—	ADCMD
bit 7							bit 0

Legend:			
R = Readable bit	W = Writable bit	U = Unimplemented bit, read as ‘0’	
-n = Value at POR	‘1’ = Bit is set	‘0’ = Bit is cleared	x = Bit is unknown

bit 15 **T5MD:** Timer5 Module Disable bit
1 = Timer5 module is disabled
0 = Timer5 module is enabled

bit 14 **T4MD:** Timer4 Module Disable bit
1 = Timer4 module is disabled
0 = Timer4 module is enabled

bit 13 **T3MD:** Timer3 Module Disable bit
1 = Timer3 module is disabled
0 = Timer3 module is enabled

bit 12 **T2MD:** Timer2 Module Disable bit
1 = Timer2 module is disabled
0 = Timer2 module is enabled

bit 11 **T1MD:** Timer1 Module Disable bit
1 = Timer1 module is disabled
0 = Timer1 module is enabled

bit 10 **Unimplemented:** Read as ‘0’

bit 9 **PWMMD:** PWMx Module Disable bit
1 = PWMx module is disabled
0 = PWMx module is enabled

bit 8 **Unimplemented:** Read as ‘0’

bit 7 **I2C1MD:** I2C1 Module Disable bit
1 = I2C1 module is disabled
0 = I2C1 module is enabled

bit 6 **U2MD:** UART2 Module Disable bit
1 = UART2 module is disabled
0 = UART2 module is enabled

bit 5 **U1MD:** UART1 Module Disable bit
1 = UART1 module is disabled
0 = UART1 module is enabled

bit 4 **SPI2MD:** SPI2 Module Disable bit
1 = SPI2 module is disabled
0 = SPI2 module is enabled

bit 3 **SPI1MD:** SPI1 Module Disable bit
1 = SPI1 module is disabled
0 = SPI1 module is enabled

bit 2-1 **Unimplemented:** Read as ‘0’

bit 0 **ADCMD:** ADC Module Disable bit
1 = ADC module is disabled
0 = ADC module is enabled

© 2013-2015 Microchip Technology Inc.

REGISTER 9-2: PMD2: PERIPHERAL MODULE DISABLE CONTROL REGISTER 2

U-0	U-0	U-0	U-0	R/W-0	R/W-0	R/W-0	R/W-0
—	—	—	—	IC4MD	IC3MD	IC2MD	IC1MD
bit 15							bit 8

U-0	U-0	U-0	U-0	R/W-0	R/W-0	R/W-0	R/W-0
—	—	—	—	OC4MD	OC3MD	OC2MD	OC1MD
bit 7							bit 0

Legend:			
R = Readable bit	W = Writable bit	U = Unimplemented bit, read as ‘0’	
-n = Value at POR	‘1’ = Bit is set	‘0’ = Bit is cleared	x = Bit is unknown

bit 15-12 **Unimplemented:** Read as ‘0’

bit 11 **IC4MD:** Input Capture 4 Module Disable bit
1 = Input Capture 4 module is disabled
0 = Input Capture 4 module is enabled

bit 10 **IC3MD:** Input Capture 3 Module Disable bit
1 = Input Capture 3 module is disabled
0 = Input Capture 3 module is enabled

bit 9 **IC2MD:** Input Capture 2 Module Disable bit
1 = Input Capture 2 module is disabled
0 = Input Capture 2 module is enabled

bit 8 **IC1MD:** Input Capture 1 Module Disable bit
1 = Input Capture 1 module is disabled
0 = Input Capture 1 module is enabled

bit 7-4 **Unimplemented:** Read as ‘0’

bit 3 **OC4MD:** Output Compare 4 Module Disable bit
1 = Output Compare 4 module is disabled
0 = Output Compare 4 module is enabled

bit 2 **OC3MD:** Output Compare 3 Module Disable bit
1 = Output Compare 3 module is disabled
0 = Output Compare 3 module is enabled

bit 1 **OC2MD:** Output Compare 2 Module Disable bit
1 = Output Compare 2 module is disabled
0 = Output Compare 2 module is enabled

bit 0 **OC1MD:** Output Compare 1 Module Disable bit
1 = Output Compare 1 module is disabled
0 = Output Compare 1 module is enabled

REGISTER 9-3: PMD3: PERIPHERAL MODULE DISABLE CONTROL REGISTER 3

U-0	U-0	U-0	U-0	U-0	R/W-0	U-0	U-0
—	—	—	—	—	CMPMD	—	—
bit 15							bit 8

U-0	U-0	U-0	U-0	U-0	U-0	R/W-0	U-0
—	—	—	—	—	—	I2C2MD	—
bit 7							bit 0

Legend:			
R = Readable bit	W = Writable bit	U = Unimplemented bit, read as ‘0’	
-n = Value at POR	‘1’ = Bit is set	‘0’ = Bit is cleared	x = Bit is unknown

bit 15-11 **Unimplemented:** Read as ‘0’

bit 10 **CMPMD:** Comparator Module Disable bit
1 = Comparator module is disabled
0 = Comparator module is enabled

bit 9-2 **Unimplemented:** Read as ‘0’

bit 1 **I2C2MD:** I2C2 Module Disable bit
1 = I2C2 module is disabled
0 = I2C2 module is enabled

bit 0 **Unimplemented:** Read as ‘0’

REGISTER 9-4: PMD4: PERIPHERAL MODULE DISABLE CONTROL REGISTER 4

U-0	U-0	U-0	U-0	U-0	U-0	U-0	U-0
—	—	—	—	—	—	—	—
bit 15							bit 8

U-0	U-0	U-0	U-0	R/W-0	U-0	U-0	U-0
—	—	—	—	REFOMD	—	—	—
bit 7							bit 0

Legend:			
R = Readable bit	W = Writable bit	U = Unimplemented bit, read as ‘0’	
-n = Value at POR	‘1’ = Bit is set	‘0’ = Bit is cleared	x = Bit is unknown

bit 15-4 **Unimplemented:** Read as ‘0’

bit 3 **REFOMD:** Reference Clock Module Disable bit
1 = Reference clock module is disabled
0 = Reference clock module is enabled

bit 2-0 **Unimplemented:** Read as ‘0’

© 2013-2015 Microchip Technology Inc.

REGISTER 9-5: PMD6: PERIPHERAL MODULE DISABLE CONTROL REGISTER 6

U-0	U-0	U-0	R/W-0	R/W-0	R/W-0	R/W-0	R/W-0
—	—	—	PWM5MD	PWM4MD	PWM3MD	PWM2MD	PWM1MD
bit 15							bit 8

U-0	U-0	U-0	U-0	U-0	U-0	U-0	U-0
—	—	—	—	—	—	—	—
bit 7							bit 0

Legend:			
R = Readable bit	W = Writable bit	U = Unimplemented bit, read as ‘0’	
-n = Value at POR	‘1’ = Bit is set	‘0’ = Bit is cleared	x = Bit is unknown

bit 15-13 **Unimplemented:** Read as ‘0’

bit 12 **PWM5MD:** PWM5 Module Disable bit
1 = PWM5 module is disabled
0 = PWM5 module is enabled

bit 11 **PWM4MD:** PWM4 Module Disable bit
1 = PWM4 module is disabled
0 = PWM4 module is enabled

bit 10 **PWM3MD:** PWM3 Module Disable bit
1 = PWM3 module is disabled
0 = PWM3 module is enabled

bit 9 **PWM2MD:** PWM2 Module Disable bit
1 = PWM2 module is disabled
0 = PWM2 module is enabled

bit 8 **PWM1MD:** PWM1 Module Disable bit
1 = PWM1 module is disabled
0 = PWM1 module is enabled

bit 7-0 **Unimplemented:** Read as ‘0’

REGISTER 9-6: PMD7: PERIPHERAL MODULE DISABLE CONTROL REGISTER 7

U-0	U-0	U-0	U-0	R/W-0	R/W-0	R/W-0	R/W-0
—	—	—	—	CMP4MD	CMP3MD	CMP2MD	CMP1MD
bit 15							bit 8

U-0	U-0	U-0	U-0	U-0	U-0	R/W-0	U-0
—	—	—	—	—	—	PGA1MD	—
bit 7							bit 0

Legend:			
R = Readable bit	W = Writable bit	U = Unimplemented bit, read as ‘0’	
-n = Value at POR	‘1’ = Bit is set	‘0’ = Bit is cleared	x = Bit is unknown

bit 15-12 **Unimplemented:** Read as ‘0’

bit 11 **CMP4MD:** CMP4 Module Disable bit
1 = CMP4 module is disabled
0 = CMP4 module is enabled

bit 10 **CMP3MD:** CMP3 Module Disable bit
1 = CMP3 module is disabled
0 = CMP3 module is enabled

bit 9 **CMP2MD:** CMP2 Module Disable bit
1 = CMP2 module is disabled
0 = CMP2 module is enabled

bit 8 **CMP1MD:** CMP1 Module Disable bit
1 = CMP1 module is disabled
0 = CMP1 module is enabled

bit 7-2 **Unimplemented:** Read as ‘0’

bit 1 **PGA1MD:** PGA1 Module Disable bit
1 = PGA1 module is disabled
0 = PGA1 module is enabled

bit 0 **Unimplemented:** Read as ‘0’

© 2013-2015 Microchip Technology Inc.

REGISTER 9-7: PMD8: PERIPHERAL MODULE DISABLE CONTROL REGISTER 8

U-0	U-0	U-0	U-0	U-0	R/W-0	R/W-0	U-0
—	—	—	—	—	PGA2MD	ABGMD	—
bit 15							bit 8

U-0	U-0	U-0	U-0	U-0	U-0	R/W-0	U-0
—	—	—	—	—	—	CCSMD	—
bit 7							bit 0

Legend:			
R = Readable bit	W = Writable bit	U = Unimplemented bit, read as ‘0’	
-n = Value at POR	‘1’ = Bit is set	‘0’ = Bit is cleared	x = Bit is unknown

bit 15-11 **Unimplemented:** Read as ‘0’

bit 10 **PGA2MD:** PGA2 Module Disable bit
1 = PGA2 module is disabled
0 = PGA2 module is enabled

bit 9 **ABGMD:** Band Gap Reference Voltage Disable bit
1 = Band gap reference voltage is disabled
0 = Band gap reference voltage is enabled

bit 8-2 **Unimplemented:** Read as ‘0’

bit 1 **CCSMD:** Constant-Current Source Module Disable bit
1 = Constant-current source module is disabled
0 = Constant-current source module is enabled

bit 0 **Unimplemented:** Read as ‘0’

NOTES:

© 2013-2015 Microchip Technology Inc.

10.0 I/O PORTS

Note 1: This data sheet summarizes the features of the dsPIC33EPXXGS50X family of devices. It is not intended to be a comprehensive reference source. To complement the information in this data sheet, refer to **"I/O Ports"** (DS70000598) in the *"dsPIC33/PIC24 Family Reference Manual"*, which is available from the Microchip web site (www.microchip.com).

2: Some registers and associated bits described in this section may not be available on all devices. Refer to **Section 4.0 "Memory Organization"** in this data sheet for device-specific register and bit information.

Many of the device pins are shared among the peripherals and the Parallel I/O ports. All I/O input ports feature Schmitt Trigger inputs for improved noise immunity.

10.1 Parallel I/O (PIO) Ports

Generally, a Parallel I/O port that shares a pin with a peripheral is subservient to the peripheral. The peripheral's output buffer data and control signals are provided to a pair of multiplexers. The multiplexers select whether the peripheral or the associated port has ownership of the output data and control signals of the I/O pin. The logic also prevents "loop through", in which a port's digital output can drive the input of a peripheral that shares the same pin. Figure 10-1 illustrates how ports are shared with other peripherals and the associated I/O pin to which they are connected.

When a peripheral is enabled and the peripheral is actively driving an associated pin, the use of the pin as a general purpose output pin is disabled. The I/O pin can be read, but the output driver for the parallel port bit is disabled. If a peripheral is enabled, but the peripheral is not actively driving a pin, that pin can be driven by a port.

All port pins have eight registers directly associated with their operation as digital I/Os. The Data Direction register (TRISx) determines whether the pin is an input or an output. If the data direction bit is a '1', then the pin is an input. All port pins are defined as inputs after a Reset. Reads from the latch (LATx), read the latch. Writes to the latch, write the latch. Reads from the port (PORTx), read the port pins, while writes to the port pins, write the latch.

Any bit and its associated data and control registers that are not valid for a particular device are disabled. This means the corresponding LATx and TRISx registers, and the port pin are read as zeros.

When a pin is shared with another peripheral or function that is defined as an input only, it is nevertheless regarded as a dedicated port because there is no other competing source of outputs.

FIGURE 10-1: BLOCK DIAGRAM OF A TYPICAL SHARED PORT STRUCTURE

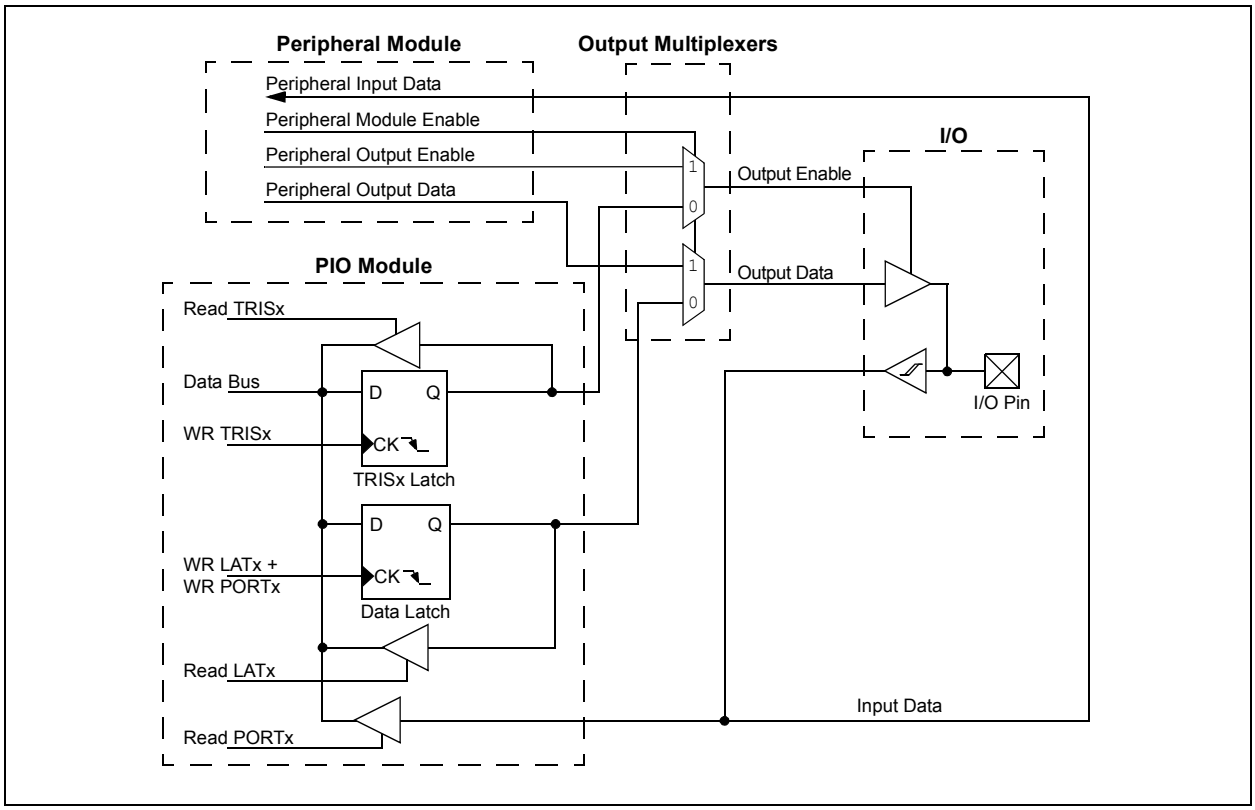

10.1.1 OPEN-DRAIN CONFIGURATION

In addition to the PORTx, LATx and TRISx registers for data control, port pins can also be individually configured for either digital or open-drain output. This is controlled by the Open-Drain Control x register, ODCx, associated with each port. Setting any of the bits configures the corresponding pin to act as an open-drain output.

The open-drain feature allows the generation of outputs other than V_{DD} by using external pull-up resistors. The maximum open-drain voltage allowed on any pin is the same as the maximum V_{IH} specification for that particular pin.

See the **"Pin Diagrams"** section for the available 5V tolerant pins and Table 26-11 for the maximum V_{IH} specification for each pin.

10.2 Configuring Analog and Digital Port Pins

The ANSELx register controls the operation of the analog port pins. The port pins that are to function as analog inputs or outputs must have their corresponding ANSELx and TRISx bits set. In order to use port pins for I/O functionality with digital modules, such as timers, UARTs, etc., the corresponding ANSELx bit must be cleared.

The ANSELx register has a default value of 0xFFFF; therefore, all pins that share analog functions are analog (not digital) by default.

Pins with analog functions affected by the ANSELx registers are listed with a buffer type of analog in the Pinout I/O Descriptions (see Table 1-1).

If the TRISx bit is cleared (output) while the ANSELx bit is set, the digital output level (V_{OH} or V_{OL}) is converted by an analog peripheral, such as the ADC module or comparator module.

When the PORTx register is read, all pins configured as analog input channels are read as cleared (a low level).

Pins configured as digital inputs do not convert an analog input. Analog levels on any pin, defined as a digital input (including the ANx pins), can cause the input buffer to consume current that exceeds the device specifications.

10.2.1 I/O PORT WRITE/READ TIMING

One instruction cycle is required between a port direction change or port write operation and a read operation of the same port. Typically, this instruction would be a NOP, as shown in Example 10-1.

10.3 Input Change Notification (ICN)

The Input Change Notification function of the I/O ports allows devices to generate interrupt requests to the processor in response to a Change-of-State (COS) on selected input pins. This feature can detect input Change-of-States, even in Sleep mode, when the clocks are disabled. Every I/O port pin can be selected (enabled) for generating an interrupt request on a Change-of-State.

Three control registers are associated with the ICN functionality of each I/O port. The CNENx registers contain the ICN interrupt enable control bits for each of the input pins. Setting any of these bits enables an ICN interrupt for the corresponding pins.

Each I/O pin also has a weak pull-up and a weak pull-down connected to it. The pull-ups and pull-downs act as a current source, or sink source, connected to the pin, and eliminate the need for external resistors when push button or keypad devices are connected. The pull-ups and pull-downs are enabled separately, using the CNPUx and the CNPDx registers, which contain the control bits for each of the pins. Setting any of the control bits enables the weak pull-ups and/or pull-downs for the corresponding pins.

> **Note:** Pull-ups and pull-downs on Input Change Notification pins should always be disabled when the port pin is configured as a digital output.

EXAMPLE 10-1: PORT WRITE/READ EXAMPLE

```
MOV    0xFF00, W0    ; Configure PORTB<15:8>
                     ; as inputs
MOV    W0, TRISB     ; and PORTB<7:0>
                     ; as outputs
NOP                  ; Delay 1 cycle
BTSS   PORTB, #13    ; Next Instruction
```


© 2013-2015 Microchip Technology Inc.

10.4 Peripheral Pin Select (PPS)

A major challenge in general purpose devices is providing the largest possible set of peripheral features, while minimizing the conflict of features on I/O pins. The challenge is even greater on low pin count devices. In an application where more than one peripheral needs to be assigned to a single pin, inconvenient work arounds in application code, or a complete redesign, may be the only option.

Peripheral Pin Select configuration provides an alternative to these choices by enabling peripheral set selection and placement on a wide range of I/O pins. By increasing the pinout options available on a particular device, users can better tailor the device to their entire application, rather than trimming the application to fit the device.

The Peripheral Pin Select configuration feature operates over a fixed subset of digital I/O pins. Users may independently map the input and/or output of most digital peripherals to any one of these I/O pins. Hardware safeguards are included that prevent accidental or spurious changes to the peripheral mapping once it has been established.

10.4.1 AVAILABLE PINS

The number of available pins is dependent on the particular device and its pin count. Pins that support the Peripheral Pin Select feature include the label, “RPn”, in their full pin designation, where “n” is the remappable pin number. “RP” is used to designate pins that support both remappable input and output functions.

10.4.2 AVAILABLE PERIPHERALS

The peripherals managed by the Peripheral Pin Select are all digital only peripherals. These include general serial communications (UART and SPI), general purpose timer clock inputs, timer-related peripherals (input capture and output compare) and interrupt-on-change inputs.

In comparison, some digital only peripheral modules are never included in the Peripheral Pin Select feature. This is because the peripheral’s function requires special I/O circuitry on a specific port and cannot be easily connected to multiple pins. One example includes I^2C™ modules. A similar requirement excludes all modules with analog inputs, such as the ADC Converter.

A key difference between remappable and non-remappable peripherals is that remappable peripherals are not associated with a default I/O pin. The peripheral must always be assigned to a specific I/O pin before it can be used. In contrast, non-remappable peripherals are always available on a default pin, assuming that the peripheral is active and not conflicting with another peripheral.

When a remappable peripheral is active on a given I/O pin, it takes priority over all other digital I/O and digital communication peripherals associated with the pin. Priority is given regardless of the type of peripheral that is mapped. Remappable peripherals never take priority over any analog functions associated with the pin.

10.4.3 CONTROLLING PERIPHERAL PIN SELECT

Peripheral Pin Select features are controlled through two sets of SFRs: one to map peripheral inputs and one to map outputs. Because they are separately controlled, a particular peripheral’s input and output (if the peripheral has both) can be placed on any selectable function pin without constraint.

The association of a peripheral to a peripheral-selectable pin is handled in two different ways, depending on whether an input or output is being mapped.

10.4.4 INPUT MAPPING

The inputs of the Peripheral Pin Select options are mapped on the basis of the peripheral. That is, a control register associated with a peripheral dictates the pin it will be mapped to. The RPINRx registers are used to configure peripheral input mapping (see Register 10-1 through Register 10-19). Each register contains sets of 8-bit fields, with each set associated with one of the remappable peripherals. Programming a given peripheral's bit field with an appropriate 8-bit value maps the RPn pin with the corresponding value to that peripheral. For any given device, the valid range of values for any bit field corresponds to the maximum number of Peripheral Pin Selections supported by the device.

For example, Figure 10-2 illustrates remappable pin selection for the U1RX input.

FIGURE 10-2: REMAPPABLE INPUT FOR U1RX

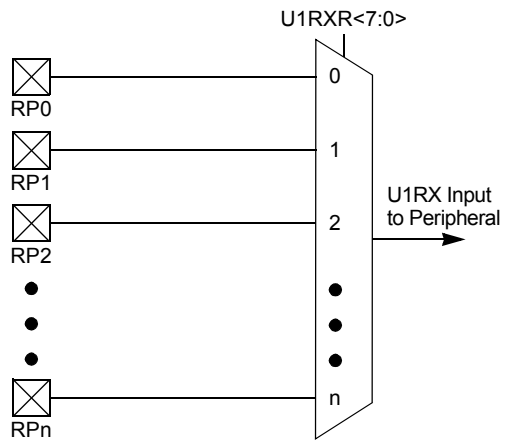

Note: For input only, Peripheral Pin Select functionality does not have priority over TRISx settings. Therefore, when configuring an RPn pin for input, the corresponding bit in the TRISx register must also be configured for input (set to '1').

10.4.4.1 Virtual Connections

The dsPIC33EPXXGS50X devices support six virtual RPn pins (RP176-RP181), which are identical in functionality to all other RPn pins, with the exception of pinouts. These six pins are internal to the devices and are not connected to a physical device pin.

These pins provide a simple way for inter-peripheral connection without utilizing a physical pin. For example, the output of the analog comparator can be connected to RP176 and the PWM Fault input can be configured for RP176 as well. This configuration allows the analog comparator to trigger PWM Faults without the use of an actual physical pin on the device.

© 2013-2015 Microchip Technology Inc.

TABLE 10-1: SELECTABLE INPUT SOURCES (MAPS INPUT TO FUNCTION)

Input Name[1]	Function Name	Register	Configuration Bits
External Interrupt 1	INT1	RPINR0	INT1R<7:0>
External Interrupt 2	INT2	RPINR1	INT2R<7:0>
Timer1 External Clock	T1CK	RPINR2	T1CKR<7:0>
Timer2 External Clock	T2CK	RPINR3	T2CKR<7:0>
Timer3 External Clock	T3CK	RPINR3	T3CKR<7:0>
Input Capture 1	IC1	RPINR7	IC1R<7:0>
Input Capture 2	IC2	RPINR7	IC2R<7:0>
Input Capture 3	IC3	RPINR8	IC3R<7:0>
Input Capture 4	IC4	RPINR8	IC4R<7:0>
Output Compare Fault A	OCFA	RPINR11	OCFAR<7:0>
PWM Fault 1	FLT1	RPINR12	FLT1R<7:0>
PWM Fault 2	FLT2	RPINR12	FLT2R<7:0>
PWM Fault 3	FLT3	RPINR13	FLT3R<7:0>
PWM Fault 4	FLT4	RPINR13	FLT4R<7:0>
UART1 Receive	U1RX	RPINR18	U1RXR<7:0>
UART1 Clear-to-Send	$\overline{\text{U1CTS}}$	RPINR18	U1CTSR<7:0>
UART2 Receive	U2RX	RPINR19	U2RXR<7:0>
UART2 Clear-to-Send	$\overline{\text{U2CTS}}$	RPINR19	U2CTSR<7:0>
SPI1 Data Input	SDI1	RPINR20	SDI1R<7:0>
SPI1 Clock Input	SCK1	RPINR20	SCK1R<7:0>
SPI1 Slave Select	$\overline{\text{SS1}}$	RPINR21	SS1R<7:0>
SPI2 Data Input	SDI2	RPINR22	SDI2R<7:0>
SPI2 Clock Input	SCK2	RPINR22	SCK2R<7:0>
SPI2 Slave Select	$\overline{\text{SS2}}$	RPINR23	SS2R<7:0>
PWM Synch Input 1	SYNCI1	RPINR37	SYNCI1R<7:0>
PWM Synch Input 2	SYNCI2	RPINR38	SYNCI2R<7:0>
PWM Fault 5	FLT5	RPINR42	FLT5R<7:0>
PWM Fault 6	FLT6	RPINR42	FLT6R<7:0>
PWM Fault 7	FLT7	RPINR43	FLT7R<7:0>
PWM Fault 8	FLT8	RPINR43	FLT8R<7:0>

Note 1: Unless otherwise noted, all inputs use the Schmitt Trigger input buffers.

10.4.5 OUTPUT MAPPING

In contrast to inputs, the outputs of the Peripheral Pin Select options are mapped on the basis of the pin. In this case, a control register associated with a particular pin dictates the peripheral output to be mapped. The RPORx registers are used to control output mapping. Each register contains sets of 6-bit fields, with each set associated with one RPn pin (see Register 10-20 through Register 10-38). The value of the bit field corresponds to one of the peripherals and that peripheral's output is mapped to the pin (see Table 10-2 and Figure 10-3).

A null output is associated with the output register Reset value of '0'. This is done to ensure that remappable outputs remain disconnected from all output pins by default.

FIGURE 10-3: MULTIPLEXING REMAPPABLE OUTPUTS FOR RPn

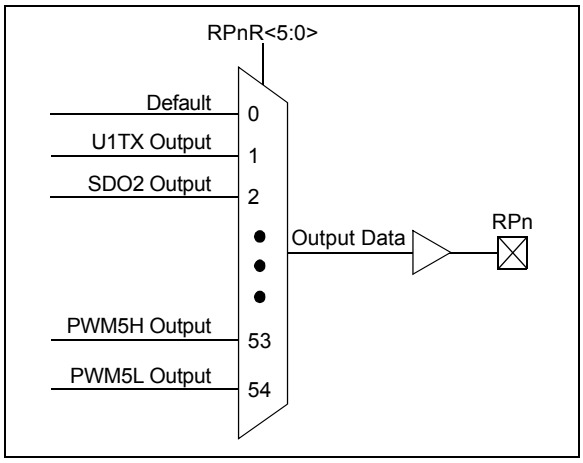

10.4.5.1 Mapping Limitations

The control schema of the peripheral select pins is not limited to a small range of fixed peripheral configurations. There are no mutual or hardware-enforced lockouts between any of the peripheral mapping SFRs. Literally any combination of peripheral mappings, across any or all of the RPn pins, is possible. This includes both many-to-one and one-to-many mappings of peripheral inputs, and outputs to pins. While such mappings may be technically possible from a configuration point of view, they may not be supportable from an electrical point of view.

© 2013-2015 Microchip Technology Inc.

TABLE 10-2: OUTPUT SELECTION FOR REMAPPABLE PINS (RPn)

Function	RPnR<5:0>	Output Name
Default PORT	000000	RPn tied to Default Pin
U1TX	000001	RPn tied to UART1 Transmit
$\overline{\text{U1RTS}}$	000010	RPn tied to UART1 Request-to-Send
U2TX	000011	RPn tied to UART2 Transmit
$\overline{\text{U2RTS}}$	000100	RPn tied to UART2 Request-to-Send
SDO1	000101	RPn tied to SPI1 Data Output
SCK1	000110	RPn tied to SPI1 Clock Output
$\overline{\text{SS1}}$	000111	RPn tied to SPI1 Slave Select
SDO2	001000	RPn tied to SPI2 Data Output
SCK2	001001	RPn tied to SPI2 Clock Output
$\overline{\text{SS2}}$	001010	RPn tied to SPI2 Slave Select
OC1	010000	RPn tied to Output Compare 1 Output
OC2	010001	RPn tied to Output Compare 2 Output
OC3	010010	RPn tied to Output Compare 3 Output
OC4	010011	RPn tied to Output Compare 4 Output
ACMP1	011000	RPn tied to Analog Comparator 1 Output
ACMP2	011001	RPn tied to Analog Comparator 2 Output
ACMP3	011010	RPn tied to Analog Comparator 3 Output
SYNCO1	101101	RPn tied to PWM Primary Master Time Base Sync Output
SYNCO2	101110	RPn tied to PWM Secondary Master Time Base Sync Output
REFCLKO	110001	RPn tied to Reference Clock Output
ACMP4	110010	RPn tied to Analog Comparator 4 Output
PWM4H	110011	RPn tied to PWM Output Pins Associated with PWM Generator 4
PWM4L	110100	RPn tied to PWM Output Pins Associated with PWM Generator 4
PWM5H	110101	RPn tied to PWM Output Pins Associated with PWM Generator 5
PWM5L	110110	RPn tied to PWM Output Pins Associated with PWM Generator 5

10.5 I/O Helpful Tips

1. In some cases, certain pins, as defined in Table 26-11 under “Injection Current”, have internal protection diodes to VDD and VSS. The term, “Injection Current”, is also referred to as “Clamp Current”. On designated pins, with sufficient external current-limiting precautions by the user, I/O pin input voltages are allowed to be greater or less than the data sheet absolute maximum ratings, with respect to the VSS and VDD supplies. Note that when the user application forward biases either of the high or low side internal input clamp diodes, that the resulting current being injected into the device, that is clamped internally by the VDD and VSS power rails, may affect the ADC accuracy by four to six counts.
2. I/O pins that are shared with any analog input pin (i.e., ANx) are always analog pins by default after any Reset. Consequently, configuring a pin as an analog input pin automatically disables the digital input pin buffer and any attempt to read the digital input level by reading PORTx or LATx will always return a ‘0’, regardless of the digital logic level on the pin. To use a pin as a digital I/O pin on a shared ANx pin, the user application needs to configure the Analog Pin Configuration registers in the I/O ports module (i.e., ANSELx) by setting the appropriate bit that corresponds to that I/O port pin to a ‘0’.

Note:	Although it is not possible to use a digital input pin when its analog function is enabled, it is possible to use the digital I/O output function, TRISx = 0x0, while the analog function is also enabled. However, this is not recommended, particularly if the analog input is connected to an external analog voltage source, which would create signal contention between the analog signal and the output pin driver.

3. Most I/O pins have multiple functions. Referring to the device pin diagrams in this data sheet, the priorities of the functions allocated to any pins are indicated by reading the pin name from left-to-right. The left most function name takes precedence over any function to its right in the naming convention. For example: AN16/T2CK/T7CK/RC1; this indicates that AN16 is the highest priority in this example and will supersede all other functions to its right in the list. Those other functions to its right, even if enabled, would not work as long as any other function to its left was enabled. This rule applies to all of the functions listed for a given pin.
4. Each pin has an internal weak pull-up resistor and pull-down resistor that can be configured using the CNPUx and CNPDx registers, respectively. These resistors eliminate the need for external resistors in certain applications. The internal pull-up is up to ~(VDD – 0.8), not VDD. This value is still above the minimum VIH of CMOS and TTL devices.
5. When driving LEDs directly, the I/O pin can source or sink more current than what is specified in the VOH/IOH and VOL/IOL DC characteristics specification. The respective IOH and IOL current rating only applies to maintaining the corresponding output at or above the VOH, and at or below the VOL levels. However, for LEDs, unlike digital inputs of an externally connected device, they are not governed by the same minimum VIH/VIL levels. An I/O pin output can safely sink or source any current less than that listed in the Absolute Maximum Ratings in **Section 26.0 “Electrical Characteristics”**of this data sheet. For example:

   VOH = 2.4v @ IOH = -8 mA and VDD = 3.3V

   The maximum output current sourced by any 8 mA I/O pin = 12 mA.

   LED source current < 12 mA is technically permitted. Refer to the VOH/IOH graphs in **Section 27.0 “DC and AC Device Characteristics Graphs”** for additional information.

© 2013-2015 Microchip Technology Inc.

6. The Peripheral Pin Select (PPS) pin mapping rules are as follows:
   a) Only one “output” function can be active on a given pin at any time, regardless if it is a dedicated or remappable function (one pin, one output).
   b) It is possible to assign a “remappable output” function to multiple pins and externally short or tie them together for increased current drive.
   c) If any “dedicated output” function is enabled on a pin, it will take precedence over any remappable “output” function.
   d) If any “dedicated digital” (input or output) function is enabled on a pin, any number of “input” remappable functions can be mapped to the same pin.
   e) If any “dedicated analog” function(s) are enabled on a given pin, “digital input(s)” of any kind will all be disabled, although a single “digital output”, at the user’s cautionary discretion, can be enabled and active as long as there is no signal contention with an external analog input signal. For example, it is possible for the ADC to convert the digital output logic level, or to toggle a digital output on a comparator or ADC input, provided there is no external analog input, such as for a built-in self-test.
   f) Any number of “input” remappable functions can be mapped to the same pin(s) at the same time, including to any pin with a single output from either a dedicated or remappable “output”.
   g) The TRISx registers control *only* the digital I/O output buffer. Any other dedicated or remappable active “output” will automatically override the TRISx setting. The TRISx register *does not* control the digital logic “input” buffer. Remappable digital “inputs” do not automatically override TRISx settings, which means that the TRISx bit must be set to input for pins with only remappable input function(s) assigned.
   h) All analog pins are enabled by default after any Reset and the corresponding digital input buffer on the pin has been disabled. Only the Analog Pin Select x (ANSELx) registers control the digital input buffer, *not* the TRISx register. The user must disable the analog function on a pin using the Analog Pin Select x registers in order to use any “digital input(s)” on a corresponding pin, no exceptions.

10.6 I/O Ports Resources

Many useful resources are provided on the main product page of the Microchip web site for the devices listed in this data sheet. This product page contains the latest updates and additional information.

10.6.1 KEY RESOURCES

- **“I/O Ports”** (DS70000598) in the *“dsPIC33/PIC24 Family Reference Manual”*
- Code Samples
- Application Notes
- Software Libraries
- Webinars
- All Related *“dsPIC33/PIC24 Family Reference Manual”* Sections
- Development Tools

10.7 Peripheral Pin Select Registers

REGISTER 10-1: RPINR0: PERIPHERAL PIN SELECT INPUT REGISTER 0

R/W-0	R/W-0	R/W-0	R/W-0	R/W-0	R/W-0	R/W-0	R/W-0
INT1R<7:0>							
bit 15							bit 8

U-0	U-0	U-0	U-0	U-0	U-0	U-0	U-0
—	—	—	—	—	—	—	—
bit 7							bit 0

Legend:			
R = Readable bit	W = Writable bit	U = Unimplemented bit, read as ‘0’	
-n = Value at POR	‘1’ = Bit is set	‘0’ = Bit is cleared	x = Bit is unknown

bit 15-8 **INT1R<7:0>:** Assign External Interrupt 1 (INT1) to the Corresponding RPn Pin bits
`10110101` = Input tied to RP181
`10110100` = Input tied to RP180
•
•
•
`00000001` = Input tied to RP1
`00000000` = Input tied to Vss

bit 7-0 **Unimplemented:** Read as ‘`0`’

REGISTER 10-2: RPINR1: PERIPHERAL PIN SELECT INPUT REGISTER 1

U-0	U-0	U-0	U-0	U-0	U-0	U-0	U-0
—	—	—	—	—	—	—	—
bit 15							bit 8

R/W-0	R/W-0	R/W-0	R/W-0	R/W-0	R/W-0	R/W-0	R/W-0
INT2R<7:0>							
bit 7							bit 0

Legend:			
R = Readable bit	W = Writable bit	U = Unimplemented bit, read as ‘0’	
-n = Value at POR	‘1’ = Bit is set	‘0’ = Bit is cleared	x = Bit is unknown

bit 15-8 **Unimplemented:** Read as ‘`0`’

bit 7-0 **INT2R<7:0>:** Assign External Interrupt 2 (INT2) to the Corresponding RPn Pin bits
`10110101` = Input tied to RP181
`10110100` = Input tied to RP180
•
•
•
`00000001` = Input tied to RP1
`00000000` = Input tied to Vss

© 2013-2015 Microchip Technology Inc.

REGISTER 10-3: RPINR2: PERIPHERAL PIN SELECT INPUT REGISTER 2

R/W-0	R/W-0	R/W-0	R/W-0	R/W-0	R/W-0	R/W-0	R/W-0
T1CKR<7:0>							
bit 15							bit 8

U-0	U-0	U-0	U-0	U-0	U-0	U-0	U-0
—	—	—	—	—	—	—	—
bit 7							bit 0

Legend:			
R = Readable bit	W = Writable bit	U = Unimplemented bit, read as ‘0’	
-n = Value at POR	‘1’ = Bit is set	‘0’ = Bit is cleared	x = Bit is unknown

bit 15-8 **T1CKR<7:0>:** Assign Timer1 External Clock (T1CK) to the Corresponding RPn Pin bits

`10110101` = Input tied to RP181
`10110100` = Input tied to RP180
•
•
•
`00000001` = Input tied to RP1
`00000000` = Input tied to Vss

bit 7-0 **Unimplemented:** Read as ‘`0`’

REGISTER 10-4: RPINR3: PERIPHERAL PIN SELECT INPUT REGISTER 3

R/W-0	R/W-0	R/W-0	R/W-0	R/W-0	R/W-0	R/W-0	R/W-0
T3CKR7	T3CKR6	T3CKR5	T3CKR4	T3CKR3	T3CKR2	T3CKR1	T3CKR0
bit 15							bit 8

R/W-0	R/W-0	R/W-0	R/W-0	R/W-0	R/W-0	R/W-0	R/W-0
T2CKR7	T2CKR6	T2CKR5	T2CKR4	T2CKR3	T2CKR2	T2CKR1	T2CKR0
bit 7							bit 0

Legend:			
R = Readable bit	W = Writable bit	U = Unimplemented bit, read as ‘0’	
-n = Value at POR	‘1’ = Bit is set	‘0’ = Bit is cleared	x = Bit is unknown

bit 15-8 **T3CKR<7:0>:** Assign Timer3 External Clock (T3CK) to the Corresponding RPn Pin bits
`10110101` = Input tied to RP181
`10110100` = Input tied to RP180
•
•
•
`0000001` = Input tied to RP1
`0000000` = Input tied to Vss

bit 7-0 **T2CKR<7:0>:** Assign Timer2 External Clock (T2CK) to the Corresponding RPn Pin bits
`10110101` = Input tied to RP181
`10110100` = Input tied to RP180
•
•
•
`00000001` = Input tied to RP1
`00000000` = Input tied to Vss

© 2013-2015 Microchip Technology Inc.

REGISTER 10-5: RPINR7: PERIPHERAL PIN SELECT INPUT REGISTER 7

R/W-0	R/W-0	R/W-0	R/W-0	R/W-0	R/W-0	R/W-0	R/W-0
IC2R7	IC2R6	IC2R5	IC2R4	IC2R3	IC2R2	IC2R1	IC2R0
bit 15							bit 8

R/W-0	R/W-0	R/W-0	R/W-0	R/W-0	R/W-0	R/W-0	R/W-0
IC1R7	IC1R6	IC1R5	IC1R4	IC1R3	IC1R2	IC1R1	IC1R0
bit 7							bit 0

Legend:			
R = Readable bit	W = Writable bit	U = Unimplemented bit, read as ‘0’	
-n = Value at POR	‘1’ = Bit is set	‘0’ = Bit is cleared	x = Bit is unknown

bit 15-8 **IC2R<7:0>:** Assign Input Capture 2 (IC2) to the Corresponding RPn Pin bits

`10110101` = Input tied to RP181
`10110100` = Input tied to RP180
•
•
•
`00000001` = Input tied to RP1
`00000000` = Input tied to Vss

bit 7-0 **IC1R<7:0>:** Assign Input Capture 1 (IC1) to the Corresponding RPn Pin bits

`10110101` = Input tied to RP181
`10110100` = Input tied to RP180
•
•
•
`00000001` = Input tied to RP1
`00000000` = Input tied to Vss

REGISTER 10-6: RPINR8: PERIPHERAL PIN SELECT INPUT REGISTER 8

R/W-0	R/W-0	R/W-0	R/W-0	R/W-0	R/W-0	R/W-0	R/W-0
IC4R7	IC4R6	IC4R5	IC4R4	IC4R3	IC4R2	IC4R1	IC4R0
bit 15							bit 8

R/W-0	R/W-0	R/W-0	R/W-0	R/W-0	R/W-0	R/W-0	R/W-0
IC3R7	IC3R6	IC3R5	IC3R4	IC3R3	IC3R2	IC3R1	IC3R0
bit 7							bit 0

Legend:			
R = Readable bit	W = Writable bit	U = Unimplemented bit, read as ‘0’	
-n = Value at POR	‘1’ = Bit is set	‘0’ = Bit is cleared	x = Bit is unknown

bit 15-8 **IC4R<7:0>:** Assign Input Capture 4 (IC4) to the Corresponding RPn Pin bits

`10110101` = Input tied to RP181
`10110100` = Input tied to RP180
•
•
•
`00000001` = Input tied to RP1
`00000000` = Input tied to Vss

bit 7-0 **IC3R<7:0>:** Assign Input Capture 3 (IC3) to the Corresponding RPn Pin bits

`10110101` = Input tied to RP181
`10110100` = Input tied to RP180
•
•
•
`00000001` = Input tied to RP1
`00000000` = Input tied to Vss

© 2013-2015 Microchip Technology Inc.

REGISTER 10-7: RPINR11: PERIPHERAL PIN SELECT INPUT REGISTER 11

U-0	U-0	U-0	U-0	U-0	U-0	U-0	U-0
—	—	—	—	—	—	—	—
bit 15							bit 8

R/W-0	R/W-0	R/W-0	R/W-0	R/W-0	R/W-0	R/W-0	R/W-0
OCFAR<7:0>							
bit 7							bit 0

Legend:			
R = Readable bit	W = Writable bit	U = Unimplemented bit, read as ‘0’	
-n = Value at POR	‘1’ = Bit is set	‘0’ = Bit is cleared	x = Bit is unknown

bit 15-8 **Unimplemented:** Read as ‘0’

bit 7-0 **OCFAR<7:0>:** Assign Output Compare Fault A (OCFA) to the Corresponding RPn Pin bits

10110101 = Input tied to RP181
10110100 = Input tied to RP180
•
•
•
00000001 = Input tied to RP1
00000000 = Input tied to Vss

REGISTER 10-8: RPINR12: PERIPHERAL PIN SELECT INPUT REGISTER 12

R/W-0	R/W-0	R/W-0	R/W-0	R/W-0	R/W-0	R/W-0	R/W-0
FLT2R7	FLT2R6	FLT2R5	FLT2R4	FLT2R3	FLT2R2	FLT2R1	FLT2R0
bit 15							bit 8

R/W-0	R/W-0	R/W-0	R/W-0	R/W-0	R/W-0	R/W-0	R/W-0
FLT1R7	FLT1R6	FLT1R5	FLT1R4	FLT1R3	FLT1R2	FLT1R1	FLT1R0
bit 7							bit 0

Legend:			
R = Readable bit	W = Writable bit	U = Unimplemented bit, read as ‘0’	
-n = Value at POR	‘1’ = Bit is set	‘0’ = Bit is cleared	x = Bit is unknown

bit 15-8 **FLT2R<7:0>:** Assign PWM Fault 2 (FLT2) to the Corresponding RPn Pin bits
`10110101` = Input tied to RP181
`10110100` = Input tied to RP180
•
•
•
`00000001` = Input tied to RP1
`00000000` = Input tied to Vss

bit 7-0 **FLT1R<7:0>:** Assign PWM Fault 1 (FLT1) to the Corresponding RPn Pin bits
`10110101` = Input tied to RP181
`10110100` = Input tied to RP180
•
•
•
`00000001` = Input tied to RP1
`00000000` = Input tied to Vss

© 2013-2015 Microchip Technology Inc.

REGISTER 10-9: RPINR13: PERIPHERAL PIN SELECT INPUT REGISTER 13

R/W-0	R/W-0	R/W-0	R/W-0	R/W-0	R/W-0	R/W-0	R/W-0
FLT4R7	FLT4R6	FLT4R5	FLT4R4	FLT4R3	FLT4R2	FLT4R1	FLT4R0
bit 15							bit 8

R/W-0	R/W-0	R/W-0	R/W-0	R/W-0	R/W-0	R/W-0	R/W-0
FLT3R7	FLT3R6	FLT3R5	FLT3R4	FLT3R3	FLT3R2	FLT3R1	FLT3R0
bit 7							bit 0

Legend:			
R = Readable bit	W = Writable bit	U = Unimplemented bit, read as ‘0’	
-n = Value at POR	‘1’ = Bit is set	‘0’ = Bit is cleared	x = Bit is unknown

bit 15-8 **FLT4R<7:0>:** Assign PWM Fault 4 (FLT4) to the Corresponding RPn Pin bits
`10110101` = Input tied to RP181
`10110100` = Input tied to RP180
•
•
•
`00000001` = Input tied to RP1
`00000000` = Input tied to Vss

bit 7-0 **FLT3R<7:0>:** Assign PWM Fault 3 (FLT3) to the Corresponding RPn Pin bits
`10110101` = Input tied to RP181
`10110100` = Input tied to RP180
•
•
•
`00000001` = Input tied to RP1
`00000000` = Input tied to Vss

REGISTER 10-10: RPINR18: PERIPHERAL PIN SELECT INPUT REGISTER 18

R/W-0	R/W-0	R/W-0	R/W-0	R/W-0	R/W-0	R/W-0	R/W-0
U1CTSR7	U1CTSR6	U1CTSR5	U1CTSR4	U1CTSR3	U1CTSR2	U1CTSR1	U1CTSR0
bit 15							bit 8

R/W-0	R/W-0	R/W-0	R/W-0	R/W-0	R/W-0	R/W-0	R/W-0
U1RXR7	U1RXR6	U1RXR5	U1RXR4	U1RXR3	U1RXR2	U1RXR1	U1RXR0
bit 7							bit 0

Legend:			
R = Readable bit	W = Writable bit	U = Unimplemented bit, read as ‘0’	
-n = Value at POR	‘1’ = Bit is set	‘0’ = Bit is cleared	x = Bit is unknown

bit 15-8 **U1CTSR<7:0>:** Assign UART1 Clear-to-Send ($\overline{\text{U1CTS}}$) to the Corresponding RPn Pin bits

`10110101` = Input tied to RP181
`10110100` = Input tied to RP180
•
•
•
`00000001` = Input tied to RP1
`00000000` = Input tied to Vss

bit 7-0 **U1RXR<7:0>:** Assign UART1 Receive (U1RX) to the Corresponding RPn Pin bits

`10110101` = Input tied to RP181
`10110100` = Input tied to RP180
•
•
•
`00000001` = Input tied to RP1
`00000000` = Input tied to Vss

© 2013-2015 Microchip Technology Inc.

REGISTER 10-11: RPINR19: PERIPHERAL PIN SELECT INPUT REGISTER 19

R/W-0	R/W-0	R/W-0	R/W-0	R/W-0	R/W-0	R/W-0	R/W-0
U2CTSR7	U2CTSR6	U2CTSR5	U2CTSR4	U2CTSR3	U2CTSR2	U2CTSR1	U2CTSR0
bit 15							bit 8

R/W-0	R/W-0	R/W-0	R/W-0	R/W-0	R/W-0	R/W-0	R/W-0
U2RXR7	U2RXR6	U2RXR5	U2RXR4	U2RXR3	U2RXR2	U2RXR1	U2RXR0
bit 7							bit 0

Legend:			
R = Readable bit	W = Writable bit	U = Unimplemented bit, read as ‘0’	
-n = Value at POR	‘1’ = Bit is set	‘0’ = Bit is cleared	x = Bit is unknown

bit 15-8 **U2CTSR<7:0>:** Assign UART2 Clear-to-Send ($\overline{\text{U2CTS}}$) to the Corresponding RPn Pin bits

`10110101` = Input tied to RP181
`10110100` = Input tied to RP180
•
•
•
`00000001` = Input tied to RP1
`00000000` = Input tied to Vss

bit 7-0 **U2RXR<7:0>:** Assign UART2 Receive (U2RX) to the Corresponding RPn Pin bits

`10110101` = Input tied to RP181
`10110100` = Input tied to RP180
•
•
•
`00000001` = Input tied to RP1
`00000000` = Input tied to Vss

REGISTER 10-12: RPINR20: PERIPHERAL PIN SELECT INPUT REGISTER 20

R/W-0	R/W-0	R/W-0	R/W-0	R/W-0	R/W-0	R/W-0	R/W-0
SCK1INR7	SCK1INR6	SCK1INR5	SCK1INR4	SCK1INR3	SCK1INR2	SCK1INR1	SCK1INR0
bit 15							bit 8

R/W-0	R/W-0	R/W-0	R/W-0	R/W-0	R/W-0	R/W-0	R/W-0
SDI1R7	SDI1R6	SDI1R5	SDI1R4	SDI1R3	SDI1R2	SDI1R1	SDI1R0
bit 7							bit 0

Legend:			
R = Readable bit	W = Writable bit	U = Unimplemented bit, read as ‘0’	
-n = Value at POR	‘1’ = Bit is set	‘0’ = Bit is cleared	x = Bit is unknown

bit 15-8 **SCK1INR<7:0>:** Assign SPI1 Clock Input (SCK1) to the Corresponding RPn Pin bits
`10110101` = Input tied to RP181
`10110100` = Input tied to RP180
•
•
•
`00000001` = Input tied to RP1
`00000000` = Input tied to Vss

bit 7-0 **SDI1R<7:0>:** Assign SPI1 Data Input (SDI1) to the Corresponding RPn Pin bits
`10110101` = Input tied to RP181
`10110100` = Input tied to RP180
•
•
•
`00000001` = Input tied to RP1
`00000000` = Input tied to Vss

© 2013-2015 Microchip Technology Inc.

REGISTER 10-13: RPINR21: PERIPHERAL PIN SELECT INPUT REGISTER 21

U-0	U-0	U-0	U-0	U-0	U-0	U-0	U-0
—	—	—	—	—	—	—	—
bit 15							bit 8

R/W-0	R/W-0	R/W-0	R/W-0	R/W-0	R/W-0	R/W-0	R/W-0
SS1R<7:0>							
bit 7							bit 0

Legend:			
R = Readable bit	W = Writable bit	U = Unimplemented bit, read as ‘0’	
-n = Value at POR	‘1’ = Bit is set	‘0’ = Bit is cleared	x = Bit is unknown

bit 15-8 **Unimplemented:** Read as ‘0’

bit 7-0 **SS1R<7:0>:** Assign SPI1 Slave Select ($\overline{SS1}$) to the Corresponding RPn Pin bits

10110101 = Input tied to RP181
10110100 = Input tied to RP180
•
•
•
00000001 = Input tied to RP1
00000000 = Input tied to Vss

REGISTER 10-14: RPINR22: PERIPHERAL PIN SELECT INPUT REGISTER 22

R/W-0	R/W-0	R/W-0	R/W-0	R/W-0	R/W-0	R/W-0	R/W-0
SCK2INR7	SCK2INR6	SCK2INR5	SCK2INR4	SCK2INR3	SCK2INR2	SCK2INR1	SCK2INR0
bit 15							bit 8

R/W-0	R/W-0	R/W-0	R/W-0	R/W-0	R/W-0	R/W-0	R/W-0
SDI2R7	SDI2R6	SDI2R5	SDI2R4	SDI2R3	SDI2R2	SDI2R1	SDI2R0
bit 7							bit 0

Legend:			
R = Readable bit	W = Writable bit	U = Unimplemented bit, read as ‘0’	
-n = Value at POR	‘1’ = Bit is set	‘0’ = Bit is cleared	x = Bit is unknown

bit 15-8 **SCK2INR<7:0>:** Assign SPI2 Clock Input (SCK2) to the Corresponding RPn Pin bits
`10110101` = Input tied to RP181
`10110100` = Input tied to RP180
•
•
•
`00000001` = Input tied to RP1
`00000000` = Input tied to Vss

bit 7-0 **SDI2R<7:0>:** Assign SPI2 Data Input (SDI2) to the Corresponding RPn Pin bits
`10110101` = Input tied to RP181
`10110100` = Input tied to RP180
•
•
•
`00000001` = Input tied to RP1
`00000000` = Input tied to Vss

© 2013-2015 Microchip Technology Inc.

REGISTER 10-15: RPINR23: PERIPHERAL PIN SELECT INPUT REGISTER 23

U-0	U-0	U-0	U-0	U-0	U-0	U-0	U-0
—	—	—	—	—	—	—	—
bit 15							bit 8

R/W-0	R/W-0	R/W-0	R/W-0	R/W-0	R/W-0	R/W-0	R/W-0
SS2R<7:0>							
bit 7							bit 0

Legend:			
R = Readable bit	W = Writable bit	U = Unimplemented bit, read as ‘0’	
-n = Value at POR	‘1’ = Bit is set	‘0’ = Bit is cleared	x = Bit is unknown

bit 15-8 **Unimplemented:** Read as ‘0’

bit 7-0 **SS2R<7:0>:** Assign SPI2 Slave Select ($\overline{SS2}$) to the Corresponding RPn Pin bits

10110101 = Input tied to RP181
10110100 = Input tied to RP180
•
•
•
00000001 = Input tied to RP1
00000000 = Input tied to Vss

REGISTER 10-16: RPINR37: PERIPHERAL PIN SELECT INPUT REGISTER 37

R/W-0	R/W-0	R/W-0	R/W-0	R/W-0	R/W-0	R/W-0	R/W-0
SYNCI1R<7:0>							
bit 15							bit 8

U-0	U-0	U-0	U-0	U-0	U-0	U-0	U-0
—	—	—	—	—	—	—	—
bit 7							bit 0

Legend:			
R = Readable bit	W = Writable bit	U = Unimplemented bit, read as ‘0’	
-n = Value at POR	‘1’ = Bit is set	‘0’ = Bit is cleared	x = Bit is unknown

bit 15-8 **SYNCI1R<7:0>:** Assign PWM Synchronization Input 1 to the Corresponding RPn Pin bits
`10110101` = Input tied to RP181
`10110100` = Input tied to RP180
•
•
•
`00000001` = Input tied to RP1
`00000000` = Input tied to Vss

bit 7-0 **Unimplemented:** Read as ‘`0`’

© 2013-2015 Microchip Technology Inc.

REGISTER 10-17: RPINR38: PERIPHERAL PIN SELECT INPUT REGISTER 38

U-0	U-0	U-0	U-0	U-0	U-0	U-0	U-0
—	—	—	—	—	—	—	—
bit 15							bit 8

R/W-0	R/W-0	R/W-0	R/W-0	R/W-0	R/W-0	R/W-0	R/W-0
SYNCI2R<7:0>							
bit 7							bit 0

Legend:			
R = Readable bit	W = Writable bit	U = Unimplemented bit, read as ‘0’	
-n = Value at POR	‘1’ = Bit is set	‘0’ = Bit is cleared	x = Bit is unknown

bit 15-8 **Unimplemented:** Read as ‘0’

bit 7-0 **SYNCI2R<7:0>:** Assign PWM Synchronization Input 2 to the Corresponding RPn Pin bits

10110101 = Input tied to RP181
10110100 = Input tied to RP180
•
•
•
00000001 = Input tied to RP1
00000000 = Input tied to Vss

REGISTER 10-18: RPINR42: PERIPHERAL PIN SELECT INPUT REGISTER 42

R/W-0	R/W-0	R/W-0	R/W-0	R/W-0	R/W-0	R/W-0	R/W-0
FLT6R7	FLT6R6	FLT6R5	FLT6R4	FLT6R3	FLT6R2	FLT6R1	FLT6R0
bit 15							bit 8

R/W-0	R/W-0	R/W-0	R/W-0	R/W-0	R/W-0	R/W-0	R/W-0
FLT5R7	FLT5R6	FLT5R5	FLT5R4	FLT5R3	FLT5R2	FLT5R1	FLT5R0
bit 7							bit 0

Legend:			
R = Readable bit	W = Writable bit	U = Unimplemented bit, read as ‘0’	
-n = Value at POR	‘1’ = Bit is set	‘0’ = Bit is cleared	x = Bit is unknown

bit 15-8 **FLT6R<7:0>:** Assign PWM Fault 6 (FLT6) to the Corresponding RPn Pin bits

`10110101` = Input tied to RP181
`10110100` = Input tied to RP180
•
•
•
`00000001` = Input tied to RP1
`00000000` = Input tied to Vss

bit 7-0 **FLT5R<7:0>:** Assign PWM Fault 5 (FLT5) to the Corresponding RPn Pin bits

`10110101` = Input tied to RP181
`10110100` = Input tied to RP180
•
•
•
`00000001` = Input tied to RP1
`00000000` = Input tied to Vss

© 2013-2015 Microchip Technology Inc.

REGISTER 10-19: RPINR43: PERIPHERAL PIN SELECT INPUT REGISTER 43

R/W-0	R/W-0	R/W-0	R/W-0	R/W-0	R/W-0	R/W-0	R/W-0
FLT8R7	FLT8R6	FLT8R5	FLT8R4	FLT8R3	FLT8R2	FLT8R1	FLT8R0
bit 15							bit 8

R/W-0	R/W-0	R/W-0	R/W-0	R/W-0	R/W-0	R/W-0	R/W-0
FLT7R7	FLT7R6	FLT7R5	FLT7R4	FLT7R3	FLT7R2	FLT7R1	FLT7R0
bit 7							bit 0

Legend:			
R = Readable bit	W = Writable bit	U = Unimplemented bit, read as ‘0’	
-n = Value at POR	‘1’ = Bit is set	‘0’ = Bit is cleared	x = Bit is unknown

bit 15-8 **FLT8R<7:0>:** Assign PWM Fault 8 (FLT8) to the Corresponding RPn Pin bits
`10110101` = Input tied to RP181
`10110100` = Input tied to RP180
•
•
•
`00000001` = Input tied to RP1
`00000000` = Input tied to Vss

bit 7-0 **FLT7R<7:0>:** Assign PWM Fault 7 (FLT7) to the Corresponding RPn Pin bits
`10110101` = Input tied to RP181
`10110100` = Input tied to RP180
•
•
•
`00000001` = Input tied to RP1
`00000000` = Input tied to Vss

REGISTER 10-20: RPOR0: PERIPHERAL PIN SELECT OUTPUT REGISTER 0

U-0	U-0	R/W-0	R/W-0	R/W-0	R/W-0	R/W-0	R/W-0
—	—	RP33R5	RP33R4	RP33R3	RP33R2	RP33R1	RP33R0
bit 15							bit 8

U-0	U-0	R/W-0	R/W-0	R/W-0	R/W-0	R/W-0	R/W-0
—	—	RP32R5	RP32R4	RP32R3	RP32R2	RP32R1	RP32R0
bit 7							bit 0

Legend:			
R = Readable bit	W = Writable bit	U = Unimplemented bit, read as ‘0’	
-n = Value at POR	‘1’ = Bit is set	‘0’ = Bit is cleared	x = Bit is unknown

bit 15-14 **Unimplemented:** Read as ‘0’

bit 13-8 **RP33R<5:0>:** Peripheral Output Function is Assigned to RP33 Output Pin bits (see Table 10-2 for peripheral function numbers)

bit 7-6 **Unimplemented:** Read as ‘0’

bit 5-0 **RP32R<5:0>:** Peripheral Output Function is Assigned to RP32 Output Pin bits (see Table 10-2 for peripheral function numbers)

REGISTER 10-21: RPOR1: PERIPHERAL PIN SELECT OUTPUT REGISTER 1

U-0	U-0	R/W-0	R/W-0	R/W-0	R/W-0	R/W-0	R/W-0
—	—	RP35R5	RP35R4	RP35R3	RP35R2	RP35R1	RP35R0
bit 15							bit 8

U-0	U-0	R/W-0	R/W-0	R/W-0	R/W-0	R/W-0	R/W-0
—	—	RP34R5	RP34R4	RP34R3	RP34R2	RP34R1	RP34R0
bit 7							bit 0

Legend:			
R = Readable bit	W = Writable bit	U = Unimplemented bit, read as ‘0’	
-n = Value at POR	‘1’ = Bit is set	‘0’ = Bit is cleared	x = Bit is unknown

bit 15-14 **Unimplemented:** Read as ‘0’

bit 13-8 **RP35R<5:0>:** Peripheral Output Function is Assigned to RP35 Output Pin bits (see Table 10-2 for peripheral function numbers)

bit 7-6 **Unimplemented:** Read as ‘0’

bit 5-0 **RP34R<5:0>:** Peripheral Output Function is Assigned to RP34 Output Pin bits (see Table 10-2 for peripheral function numbers)

© 2013-2015 Microchip Technology Inc.

REGISTER 10-22: RPOR2: PERIPHERAL PIN SELECT OUTPUT REGISTER 2

U-0	U-0	R/W-0	R/W-0	R/W-0	R/W-0	R/W-0	R/W-0
—	—	RP37R5	RP37R4	RP37R3	RP37R2	RP37R1	RP37R0
bit 15							bit 8

U-0	U-0	R/W-0	R/W-0	R/W-0	R/W-0	R/W-0	R/W-0
—	—	RP36R5	RP36R4	RP36R3	RP36R2	RP36R1	RP36R0
bit 7							bit 0

Legend:			
R = Readable bit	W = Writable bit	U = Unimplemented bit, read as ‘0’	
-n = Value at POR	‘1’ = Bit is set	‘0’ = Bit is cleared	x = Bit is unknown

bit 15-14 **Unimplemented:** Read as ‘0’

bit 13-8 **RP37R<5:0>:** Peripheral Output Function is Assigned to RP37 Output Pin bits (see Table 10-2 for peripheral function numbers)

bit 7-6 **Unimplemented:** Read as ‘0’

bit 5-0 **RP36R<5:0>:** Peripheral Output Function is Assigned to RP36 Output Pin bits (see Table 10-2 for peripheral function numbers)

REGISTER 10-23: RPOR3: PERIPHERAL PIN SELECT OUTPUT REGISTER 3

U-0	U-0	R/W-0	R/W-0	R/W-0	R/W-0	R/W-0	R/W-0
—	—	RP39R5	RP39R4	RP39R3	RP39R2	RP39R1	RP39R0
bit 15							bit 8

U-0	U-0	R/W-0	R/W-0	R/W-0	R/W-0	R/W-0	R/W-0
—	—	RP38R5	RP38R4	RP38R3	RP38R2	RP38R1	RP38R0
bit 7							bit 0

Legend:			
R = Readable bit	W = Writable bit	U = Unimplemented bit, read as ‘0’	
-n = Value at POR	‘1’ = Bit is set	‘0’ = Bit is cleared	x = Bit is unknown

bit 15-14 **Unimplemented:** Read as ‘0’

bit 13-8 **RP39R<5:0>:** Peripheral Output Function is Assigned to RP39 Output Pin bits (see Table 10-2 for peripheral function numbers)

bit 7-6 **Unimplemented:** Read as ‘0’

bit 5-0 **RP38R<5:0>:** Peripheral Output Function is Assigned to RP38 Output Pin bits (see Table 10-2 for peripheral function numbers)

REGISTER 10-24: RPOR4: PERIPHERAL PIN SELECT OUTPUT REGISTER 4

U-0	U-0	R/W-0	R/W-0	R/W-0	R/W-0	R/W-0	R/W-0
—	—	RP41R5	RP41R4	RP41R3	RP41R2	RP41R1	RP41R0
bit 15							bit 8

U-0	U-0	R/W-0	R/W-0	R/W-0	R/W-0	R/W-0	R/W-0
—	—	RP40R5	RP40R4	RP40R3	RP40R2	RP40R1	RP40R0
bit 7							bit 0

Legend:			
R = Readable bit	W = Writable bit	U = Unimplemented bit, read as ‘0’	
-n = Value at POR	‘1’ = Bit is set	‘0’ = Bit is cleared	x = Bit is unknown

bit 15-14 **Unimplemented:** Read as ‘0’

bit 13-8 **RP41R<5:0>:** Peripheral Output Function is Assigned to RP41 Output Pin bits (see Table 10-2 for peripheral function numbers)

bit 7-6 **Unimplemented:** Read as ‘0’

bit 5-0 **RP40R<5:0>:** Peripheral Output Function is Assigned to RP40 Output Pin bits (see Table 10-2 for peripheral function numbers)

REGISTER 10-25: RPOR5: PERIPHERAL PIN SELECT OUTPUT REGISTER 5

U-0	U-0	R/W-0	R/W-0	R/W-0	R/W-0	R/W-0	R/W-0
—	—	RP43R5	RP43R4	RP43R3	RP43R2	RP43R1	RP43R0
bit 15							bit 8

U-0	U-0	R/W-0	R/W-0	R/W-0	R/W-0	R/W-0	R/W-0
—	—	RP42R5	RP42R4	RP42R3	RP42R2	RP42R1	RP42R0
bit 7							bit 0

Legend:			
R = Readable bit	W = Writable bit	U = Unimplemented bit, read as ‘0’	
-n = Value at POR	‘1’ = Bit is set	‘0’ = Bit is cleared	x = Bit is unknown

bit 15-14 **Unimplemented:** Read as ‘0’

bit 13-8 **RP43R<5:0>:** Peripheral Output Function is Assigned to RP43 Output Pin bits (see Table 10-2 for peripheral function numbers)

bit 7-6 **Unimplemented:** Read as ‘0’

bit 5-0 **RP42R<5:0>:** Peripheral Output Function is Assigned to RP42 Output Pin bits (see Table 10-2 for peripheral function numbers)

© 2013-2015 Microchip Technology Inc.

REGISTER 10-26: RPOR6: PERIPHERAL PIN SELECT OUTPUT REGISTER 6

U-0	U-0	R/W-0	R/W-0	R/W-0	R/W-0	R/W-0	R/W-0
—	—	RP45R5	RP45R4	RP45R3	RP45R2	RP45R1	RP45R0
bit 15							bit 8

U-0	U-0	R/W-0	R/W-0	R/W-0	R/W-0	R/W-0	R/W-0
—	—	RP44R5	RP44R4	RP44R3	RP44R2	RP44R1	RP44R0
bit 7							bit 0

Legend:			
R = Readable bit	W = Writable bit	U = Unimplemented bit, read as ‘0’	
-n = Value at POR	‘1’ = Bit is set	‘0’ = Bit is cleared	x = Bit is unknown

bit 15-14 **Unimplemented:** Read as ‘0’

bit 13-8 **RP45R<5:0>:** Peripheral Output Function is Assigned to RP45 Output Pin bits (see Table 10-2 for peripheral function numbers)

bit 7-6 **Unimplemented:** Read as ‘0’

bit 5-0 **RP44R<5:0>:** Peripheral Output Function is Assigned to RP44 Output Pin bits (see Table 10-2 for peripheral function numbers)

REGISTER 10-27: RPOR7: PERIPHERAL PIN SELECT OUTPUT REGISTER 7

U-0	U-0	R/W-0	R/W-0	R/W-0	R/W-0	R/W-0	R/W-0
—	—	RP47R5	RP47R4	RP47R3	RP47R2	RP47R1	RP47R0
bit 15							bit 8

U-0	U-0	R/W-0	R/W-0	R/W-0	R/W-0	R/W-0	R/W-0
—	—	RP46R5	RP46R4	RP46R3	RP46R2	RP46R1	RP46R0
bit 7							bit 0

Legend:			
R = Readable bit	W = Writable bit	U = Unimplemented bit, read as ‘0’	
-n = Value at POR	‘1’ = Bit is set	‘0’ = Bit is cleared	x = Bit is unknown

bit 15-14 **Unimplemented:** Read as ‘0’

bit 13-8 **RP47R<5:0>:** Peripheral Output Function is Assigned to RP47 Output Pin bits (see Table 10-2 for peripheral function numbers)

bit 7-6 **Unimplemented:** Read as ‘0’

bit 5-0 **RP46R<5:0>:** Peripheral Output Function is Assigned to RP46 Output Pin bits (see Table 10-2 for peripheral function numbers)

REGISTER 10-28: RPOR8: PERIPHERAL PIN SELECT OUTPUT REGISTER 8

U-0	U-0	R/W-0	R/W-0	R/W-0	R/W-0	R/W-0	R/W-0
—	—	RP49R5	RP49R4	RP49R3	RP49R2	RP49R1	RP49R0
bit 15							bit 8

U-0	U-0	R/W-0	R/W-0	R/W-0	R/W-0	R/W-0	R/W-0
—	—	RP48R5	RP48R4	RP48R3	RP48R2	RP48R1	RP48R0
bit 7							bit 0

Legend:			
R = Readable bit	W = Writable bit	U = Unimplemented bit, read as ‘0’	
-n = Value at POR	‘1’ = Bit is set	‘0’ = Bit is cleared	x = Bit is unknown

bit 15-14 **Unimplemented:** Read as ‘0’

bit 13-8 **RP49R<5:0>:** Peripheral Output Function is Assigned to RP49 Output Pin bits (see Table 10-2 for peripheral function numbers)

bit 7-6 **Unimplemented:** Read as ‘0’

bit 5-0 **RP48R<5:0>:** Peripheral Output Function is Assigned to RP48 Output Pin bits (see Table 10-2 for peripheral function numbers)

REGISTER 10-29: RPOR9: PERIPHERAL PIN SELECT OUTPUT REGISTER 9

U-0	U-0	R/W-0	R/W-0	R/W-0	R/W-0	R/W-0	R/W-0
—	—	RP51R5	RP51R4	RP51R3	RP51R2	RP51R1	RP51R0
bit 15							bit 8

U-0	U-0	R/W-0	R/W-0	R/W-0	R/W-0	R/W-0	R/W-0
—	—	RP50R5	RP50R4	RP50R3	RP50R2	RP50R1	RP50R0
bit 7							bit 0

Legend:			
R = Readable bit	W = Writable bit	U = Unimplemented bit, read as ‘0’	
-n = Value at POR	‘1’ = Bit is set	‘0’ = Bit is cleared	x = Bit is unknown

bit 15-14 **Unimplemented:** Read as ‘0’

bit 13-8 **RP51R<5:0>:** Peripheral Output Function is Assigned to RP51 Output Pin bits (see Table 10-2 for peripheral function numbers)

bit 7-6 **Unimplemented:** Read as ‘0’

bit 5-0 **RP50R<5:0>:** Peripheral Output Function is Assigned to RP50 Output Pin bits (see Table 10-2 for peripheral function numbers)

© 2013-2015 Microchip Technology Inc.

REGISTER 10-30: RPOR10: PERIPHERAL PIN SELECT OUTPUT REGISTER 10

U-0	U-0	R/W-0	R/W-0	R/W-0	R/W-0	R/W-0	R/W-0
—	—	RP53R5	RP53R4	RP53R3	RP53R2	RP53R1	RP53R0
bit 15							bit 8

U-0	U-0	R/W-0	R/W-0	R/W-0	R/W-0	R/W-0	R/W-0
—	—	RP52R5	RP52R4	RP52R3	RP52R2	RP52R1	RP52R0
bit 7							bit 0

Legend:			
R = Readable bit	W = Writable bit	U = Unimplemented bit, read as ‘0’	
-n = Value at POR	‘1’ = Bit is set	‘0’ = Bit is cleared	x = Bit is unknown

bit 15-14 **Unimplemented:** Read as ‘0’

bit 13-8 **RP53R<5:0>:** Peripheral Output Function is Assigned to RP53 Output Pin bits (see Table 10-2 for peripheral function numbers)

bit 7-6 **Unimplemented:** Read as ‘0’

bit 5-0 **RP52R<5:0>:** Peripheral Output Function is Assigned to RP52 Output Pin bits (see Table 10-2 for peripheral function numbers)

REGISTER 10-31: RPOR11: PERIPHERAL PIN SELECT OUTPUT REGISTER 11

U-0	U-0	R/W-0	R/W-0	R/W-0	R/W-0	R/W-0	R/W-0
—	—	RP55R5	RP55R4	RP55R3	RP55R2	RP55R1	RP55R0
bit 15							bit 8

U-0	U-0	R/W-0	R/W-0	R/W-0	R/W-0	R/W-0	R/W-0
—	—	RP54R5	RP54R4	RP54R3	RP54R2	RP54R1	RP54R0
bit 7							bit 0

Legend:			
R = Readable bit	W = Writable bit	U = Unimplemented bit, read as ‘0’	
-n = Value at POR	‘1’ = Bit is set	‘0’ = Bit is cleared	x = Bit is unknown

bit 15-14 **Unimplemented:** Read as ‘0’

bit 13-8 **RP55R<5:0>:** Peripheral Output Function is Assigned to RP55 Output Pin bits (see Table 10-2 for peripheral function numbers)

bit 7-6 **Unimplemented:** Read as ‘0’

bit 5-0 **RP54R<5:0>:** Peripheral Output Function is Assigned to RP54 Output Pin bits (see Table 10-2 for peripheral function numbers)

REGISTER 10-32: RPOR12: PERIPHERAL PIN SELECT OUTPUT REGISTER 12

U-0	U-0	R/W-0	R/W-0	R/W-0	R/W-0	R/W-0	R/W-0
—	—	RP57R5	RP57R4	RP57R3	RP57R2	RP57R1	RP57R0
bit 15							bit 8

U-0	U-0	R/W-0	R/W-0	R/W-0	R/W-0	R/W-0	R/W-0
—	—	RP56R5	RP56R4	RP56R3	RP56R2	RP56R1	RP56R0
bit 7							bit 0

Legend:			
R = Readable bit	W = Writable bit	U = Unimplemented bit, read as ‘0’	
-n = Value at POR	‘1’ = Bit is set	‘0’ = Bit is cleared	x = Bit is unknown

bit 15-14 **Unimplemented:** Read as ‘0’

bit 13-8 **RP57R<5:0>:** Peripheral Output Function is Assigned to RP57 Output Pin bits (see Table 10-2 for peripheral function numbers)

bit 7-6 **Unimplemented:** Read as ‘0’

bit 5-0 **RP56R<5:0>:** Peripheral Output Function is Assigned to RP56 Output Pin bits (see Table 10-2 for peripheral function numbers)

REGISTER 10-33: RPOR13: PERIPHERAL PIN SELECT OUTPUT REGISTER 13

U-0	U-0	R/W-0	R/W-0	R/W-0	R/W-0	R/W-0	R/W-0
—	—	RP59R5	RP59R4	RP59R3	RP59R2	RP59R1	RP59R0
bit 15							bit 8

U-0	U-0	R/W-0	R/W-0	R/W-0	R/W-0	R/W-0	R/W-0
—	—	RP58R5	RP58R4	RP58R3	RP58R2	RP58R1	RP58R0
bit 7							bit 0

Legend:			
R = Readable bit	W = Writable bit	U = Unimplemented bit, read as ‘0’	
-n = Value at POR	‘1’ = Bit is set	‘0’ = Bit is cleared	x = Bit is unknown

bit 15-14 **Unimplemented:** Read as ‘0’

bit 13-8 **RP59R<5:0>:** Peripheral Output Function is Assigned to RP59 Output Pin bits (see Table 10-2 for peripheral function numbers)

bit 7-6 **Unimplemented:** Read as ‘0’

bit 5-0 **RP58R<5:0>:** Peripheral Output Function is Assigned to RP58 Output Pin bits (see Table 10-2 for peripheral function numbers)

© 2013-2015 Microchip Technology Inc.

REGISTER 10-34: RPOR14: PERIPHERAL PIN SELECT OUTPUT REGISTER 14

U-0	U-0	R/W-0	R/W-0	R/W-0	R/W-0	R/W-0	R/W-0
—	—	RP61R5	RP61R4	RP61R3	RP61R2	RP61R1	RP61R0
bit 15							bit 8

U-0	U-0	R/W-0	R/W-0	R/W-0	R/W-0	R/W-0	R/W-0
—	—	RP60R5	RP60R4	RP60R3	RP60R2	RP60R1	RP60R0
bit 7							bit 0

Legend:			
R = Readable bit	W = Writable bit	U = Unimplemented bit, read as ‘0’	
-n = Value at POR	‘1’ = Bit is set	‘0’ = Bit is cleared	x = Bit is unknown

bit 15-14 **Unimplemented:** Read as ‘0’

bit 13-8 **RP61R<5:0>:** Peripheral Output Function is Assigned to RP61 Output Pin bits (see Table 10-2 for peripheral function numbers)

bit 7-6 **Unimplemented:** Read as ‘0’

bit 5-0 **RP60R<5:0>:** Peripheral Output Function is Assigned to RP60 Output Pin bits (see Table 10-2 for peripheral function numbers)

REGISTER 10-35: RPOR15: PERIPHERAL PIN SELECT OUTPUT REGISTER 15

U-0	U-0	R/W-0	R/W-0	R/W-0	R/W-0	R/W-0	R/W-0
—	—	RP63R5	RP63R4	RP63R3	RP63R2	RP63R1	RP63R0
bit 15							bit 8

U-0	U-0	R/W-0	R/W-0	R/W-0	R/W-0	R/W-0	R/W-0
—	—	RP62R5	RP62R4	RP62R3	RP62R2	RP62R1	RP62R0
bit 7							bit 0

Legend:			
R = Readable bit	W = Writable bit	U = Unimplemented bit, read as ‘0’	
-n = Value at POR	‘1’ = Bit is set	‘0’ = Bit is cleared	x = Bit is unknown

bit 15-14 **Unimplemented:** Read as ‘0’

bit 13-8 **RP63R<5:0>:** Peripheral Output Function is Assigned to RP63 Output Pin bits (see Table 10-2 for peripheral function numbers)

bit 7-6 **Unimplemented:** Read as ‘0’

bit 5-0 **RP62R<5:0>:** Peripheral Output Function is Assigned to RP62 Output Pin bits (see Table 10-2 for peripheral function numbers)

REGISTER 10-36: RPOR16: PERIPHERAL PIN SELECT OUTPUT REGISTER 16

U-0	U-0	R/W-0	R/W-0	R/W-0	R/W-0	R/W-0	R/W-0
—	—	RP177R5	RP177R4	RP177R3	RP177R2	RP177R1	RP177R0
bit 15							bit 8

U-0	U-0	R/W-0	R/W-0	R/W-0	R/W-0	R/W-0	R/W-0
—	—	RP176R5	RP176R4	RP176R3	RP176R2	RP176R1	RP176R0
bit 7							bit 0

Legend:			
R = Readable bit	W = Writable bit	U = Unimplemented bit, read as ‘0’	
-n = Value at POR	‘1’ = Bit is set	‘0’ = Bit is cleared	x = Bit is unknown

bit 15-14 **Unimplemented:** Read as ‘0’

bit 13-8 **RP177R<5:0>:** Peripheral Output Function is Assigned to RP177 Output Pin bits (see Table 10-2 for peripheral function numbers)

bit 7-6 **Unimplemented:** Read as ‘0’

bit 5-0 **RP176R<5:0>:** Peripheral Output Function is Assigned to RP176 Output Pin bits (see Table 10-2 for peripheral function numbers)

REGISTER 10-37: RPOR17: PERIPHERAL PIN SELECT OUTPUT REGISTER 17

U-0	U-0	R/W-0	R/W-0	R/W-0	R/W-0	R/W-0	R/W-0
—	—	RP179R5	RP179R4	RP179R3	RP179R2	RP179R1	RP179R0
bit 15							bit 8

U-0	U-0	R/W-0	R/W-0	R/W-0	R/W-0	R/W-0	R/W-0
—	—	RP178R5	RP178R4	RP178R3	RP178R2	RP178R1	RP178R0
bit 7							bit 0

Legend:			
R = Readable bit	W = Writable bit	U = Unimplemented bit, read as ‘0’	
-n = Value at POR	‘1’ = Bit is set	‘0’ = Bit is cleared	x = Bit is unknown

bit 15-14 **Unimplemented:** Read as ‘0’

bit 13-8 **RP179R<5:0>:** Peripheral Output Function is Assigned to RP179 Output Pin bits (see Table 10-2 for peripheral function numbers)

bit 7-6 **Unimplemented:** Read as ‘0’

bit 5-0 **RP178R<5:0>:** Peripheral Output Function is Assigned to RP178 Output Pin bits (see Table 10-2 for peripheral function numbers)

© 2013-2015 Microchip Technology Inc.

REGISTER 10-38: RPOR18: PERIPHERAL PIN SELECT OUTPUT REGISTER 18

U-0	U-0	R/W-0	R/W-0	R/W-0	R/W-0	R/W-0	R/W-0
—	—	RP181R5	RP181R4	RP181R3	RP181R2	RP181R1	RP181R0
bit 15							bit 8

U-0	U-0	R/W-0	R/W-0	R/W-0	R/W-0	R/W-0	R/W-0
—	—	RP180R5	RP180R4	RP180R3	RP180R2	RP180R1	RP180R0
bit 7							bit 0

Legend:			
R = Readable bit	W = Writable bit	U = Unimplemented bit, read as ‘0’	
-n = Value at POR	‘1’ = Bit is set	‘0’ = Bit is cleared	x = Bit is unknown

bit 15-14 **Unimplemented:** Read as ‘0’

bit 13-8 **RP181R<5:0>:** Peripheral Output Function is Assigned to RP181 Output Pin bits (see Table 10-2 for peripheral function numbers)

bit 7-6 **Unimplemented:** Read as ‘0’

bit 5-0 **RP180R<5:0>:** Peripheral Output Function is Assigned to RP180 Output Pin bits (see Table 10-2 for peripheral function numbers)

NOTES:

© 2013-2015 Microchip Technology Inc.

11.0 TIMER1

Note 1: This data sheet summarizes the features of the dsPIC33EPXXGS50X family of devices. It is not intended to be a comprehensive reference source. To complement the information in this data sheet, refer to **"Timers"** (DS70362) in the *"dsPIC33/PIC24 Family Reference Manual"*, which is available from the Microchip web site (www.microchip.com).

2: Some registers and associated bits described in this section may not be available on all devices. Refer to **Section 4.0 "Memory Organization"** in this data sheet for device-specific register and bit information.

The Timer1 module is a 16-bit timer that can operate as a free-running interval timer/counter.

The Timer1 module has the following unique features over other timers:

- Can be operated in Asynchronous Counter mode from an external clock source
- The external clock input (T1CK) can optionally be synchronized to the internal device clock and the clock synchronization is performed after the prescaler

A block diagram of Timer1 is shown in Figure 11-1.

The Timer1 module can operate in one of the following modes:

- Timer mode
- Gated Timer mode
- Synchronous Counter mode
- Asynchronous Counter mode

In Timer and Gated Timer modes, the input clock is derived from the internal instruction cycle clock (FCY). In Synchronous and Asynchronous Counter modes, the input clock is derived from the external clock input at the T1CK pin.

The Timer modes are determined by the following bits:

- Timer Clock Source Control bit (TCS): T1CON<1>
- Timer Synchronization Control bit (TSYNC): T1CON<2>
- Timer Gate Control bit (TGATE): T1CON<6>

Timer control bit settings for different operating modes are provided in Table 11-1.

TABLE 11-1: TIMER MODE SETTINGS

Mode	TCS	TGATE	TSYNC
Timer	0	0	x
Gated Timer	0	1	x
Synchronous Counter	1	x	1
Asynchronous Counter	1	x	0

FIGURE 11-1: 16-BIT TIMER1 MODULE BLOCK DIAGRAM

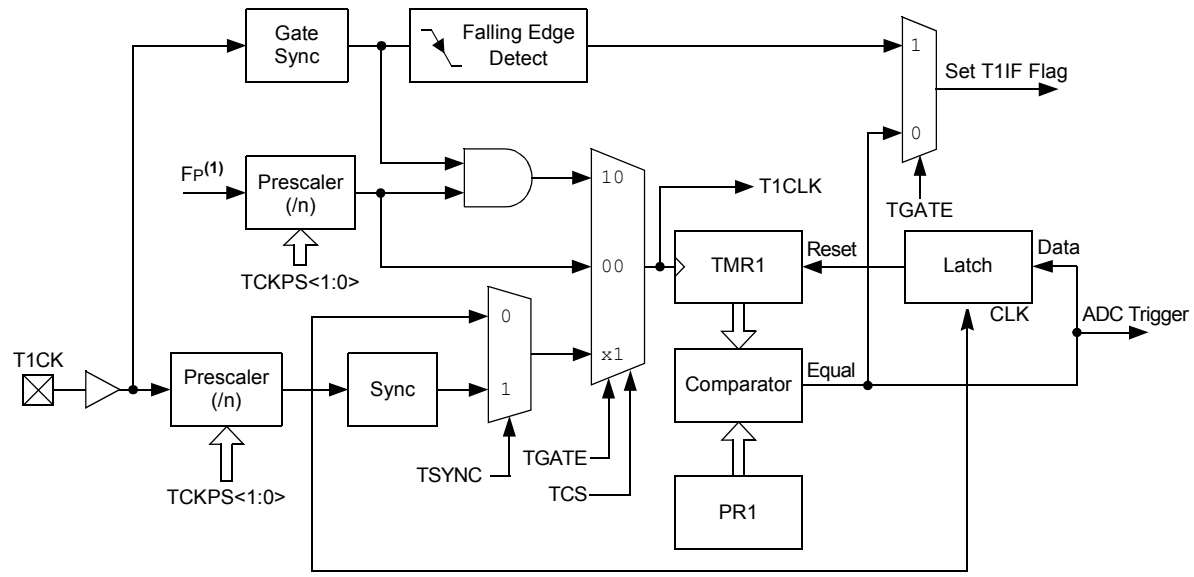

Note 1: FP is the peripheral clock.

11.1 Timer1 Resources

Many useful resources are provided on the main product page of the Microchip web site for the devices listed in this data sheet. This product page contains the latest updates and additional information.

11.1.1 KEY RESOURCES

- **"Timers"** (DS70362) in the *"dsPIC33/PIC24 Family Reference Manual"*
- Code Samples
- Application Notes
- Software Libraries
- Webinars
- All Related *"dsPIC33/PIC24 Family Reference Manual"* Sections
- Development Tools

© 2013-2015 Microchip Technology Inc.

11.2 Timer1 Control Register

REGISTER 11-1: T1CON: TIMER1 CONTROL REGISTER

R/W-0	U-0	R/W-0	U-0	U-0	U-0	U-0	U-0
TON(1)	—	TSIDL	—	—	—	—	—
bit 15							bit 8

U-0	R/W-0	R/W-0	R/W-0	U-0	R/W-0	R/W-0	U-0
—	TGATE	TCKPS1	TCKPS0	—	TSYNC(1)	TCS(1)	—
bit 7							bit 0

Legend:			
R = Readable bit	W = Writable bit	U = Unimplemented bit, read as ‘0’	
-n = Value at POR	‘1’ = Bit is set	‘0’ = Bit is cleared	x = Bit is unknown

bit 15 **TON:** Timer1 On bit(1)
1 = Starts 16-bit Timer1
0 = Stops 16-bit Timer1

bit 14 **Unimplemented:** Read as ‘0’

bit 13 **TSIDL:** Timer1 Stop in Idle Mode bit
1 = Discontinues module operation when device enters Idle mode
0 = Continues module operation in Idle mode

bit 12-7 **Unimplemented:** Read as ‘0’

bit 6 **TGATE:** Timer1 Gated Time Accumulation Enable bit
When TCS = 1:
This bit is ignored.
When TCS = 0:
1 = Gated time accumulation is enabled
0 = Gated time accumulation is disabled

bit 5-4 **TCKPS<1:0>:** Timer1 Input Clock Prescale Select bits
11 = 1:256
10 = 1:64
01 = 1:8
00 = 1:1

bit 3 **Unimplemented:** Read as ‘0’

bit 2 **TSYNC:** Timer1 External Clock Input Synchronization Select bit(1)
When TCS = 1:
1 = Synchronizes external clock input
0 = Does not synchronize external clock input
When TCS = 0:
This bit is ignored.

bit 1 **TCS:** Timer1 Clock Source Select bit(1)
1 = External clock is from pin, T1CK (on the rising edge)
0 = Internal clock (FP)

bit 0 **Unimplemented:** Read as ‘0’

Note 1: When Timer1 is enabled in External Synchronous Counter mode (TCS = 1, TSYNC = 1, TON = 1), any attempts by user software to write to the TMR1 register are ignored.

NOTES:

© 2013-2015 Microchip Technology Inc.

12.0 TIMER2/3 AND TIMER4/5

Note 1: This data sheet summarizes the features of the dsPIC33EPXXGS50X family of devices. It is not intended to be a comprehensive reference source. To complement the information in this data sheet, refer to **"Timers"** (DS70362) in the *"dsPIC33/PIC24 Family Reference Manual"*, which is available from the Microchip web site (www.microchip.com).

2: Some registers and associated bits described in this section may not be available on all devices. Refer to **Section 4.0 "Memory Organization"** in this data sheet for device-specific register and bit information.

The Timer2/3 and Timer4/5 modules are 32-bit timers, which can also be configured as four independent 16-bit timers with selectable operating modes.

As 32-bit timers, Timer2/3 and Timer4/5 operate in three modes:

- Two Independent 16-Bit Timers (e.g., Timer2 and Timer3) with all 16-Bit Operating modes (except Asynchronous Counter mode)
- Single 32-Bit Timer
- Single 32-Bit Synchronous Counter

They also support these features:

- Timer Gate Operation
- Selectable Prescaler Settings
- Timer Operation during Idle and Sleep modes
- Interrupt on a 32-Bit Period Register Match
- Time Base for Input Capture and Output Compare modules (Timer2 and Timer3 only)

Individually, all four of the 16-bit timers can function as synchronous timers or counters. They also offer the features listed previously, except for the event trigger; this is implemented only with Timer2/3. The operating modes and enabled features are determined by setting the appropriate bit(s) in the T2CON, T3CON, T4CON and T5CON registers. T2CON and T4CON are shown in generic form in Register 12-1. T3CON and T5CON are shown in Register 12-2.

For 32-bit timer/counter operation, Timer2 and Timer4 are the least significant word (lsw); Timer3 and Timer5 are the most significant word (msw) of the 32-bit timers.

Note: For 32-bit operation, T3CON and T5CON control bits are ignored. Only T2CON and T4CON control bits are used for setup and control. Timer2 and Timer4 clock and gate inputs are utilized for the 32-bit timer modules, but an interrupt is generated with the Timer3 and Timer5 interrupt flags.

A block diagram for an example 32-bit timer pair (Timer2/3 and Timer4/5) is shown in Figure 12-2.

12.1 Timer Resources

Many useful resources are provided on the main product page of the Microchip web site for the devices listed in this data sheet. This product page contains the latest updates and additional information.

12.1.1 KEY RESOURCES

- **"Timers"** (DS70362) in the *"dsPIC33/PIC24 Family Reference Manual"*
- Code Samples
- Application Notes
- Software Libraries
- Webinars
- All Related *"dsPIC33/PIC24 Family Reference Manual"* Sections
- Development Tools

FIGURE 12-1: TIMERx BLOCK DIAGRAM (x = 2 THROUGH 5)

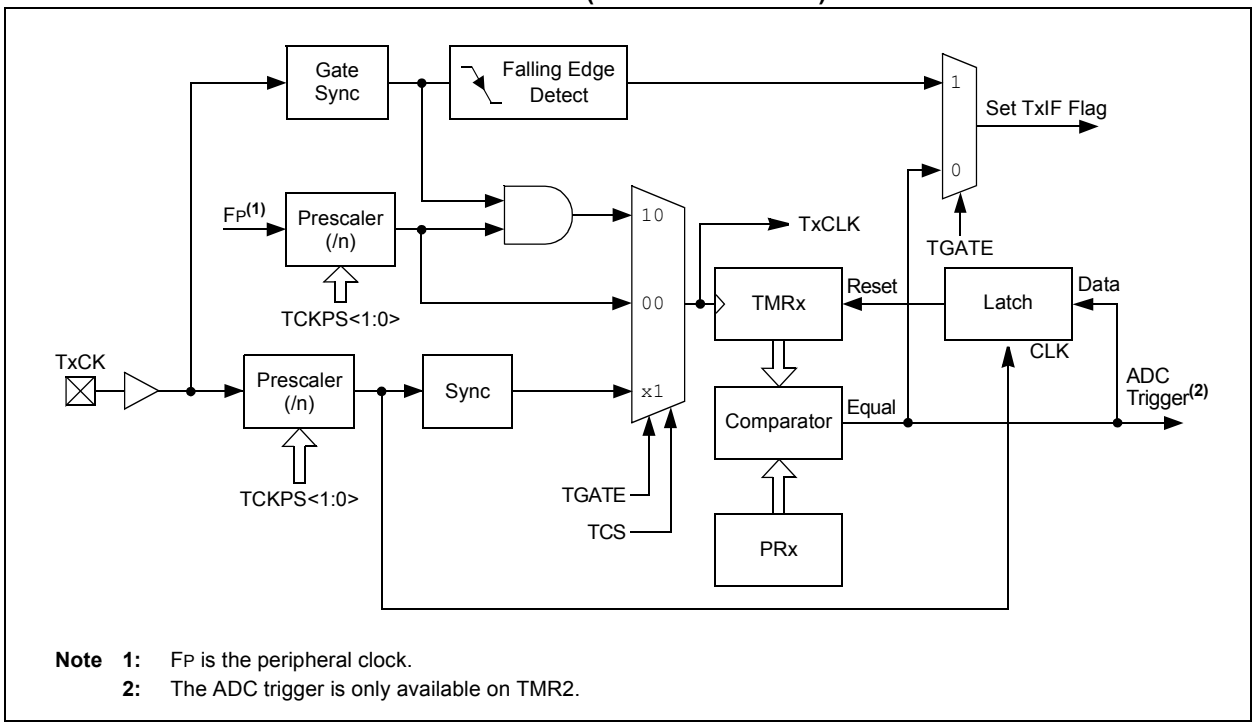

Note 1: FP is the peripheral clock.
2: The ADC trigger is only available on TMR2.

FIGURE 12-2: TYPE B/TYPE C TIMER PAIR BLOCK DIAGRAM (32-BIT TIMER)

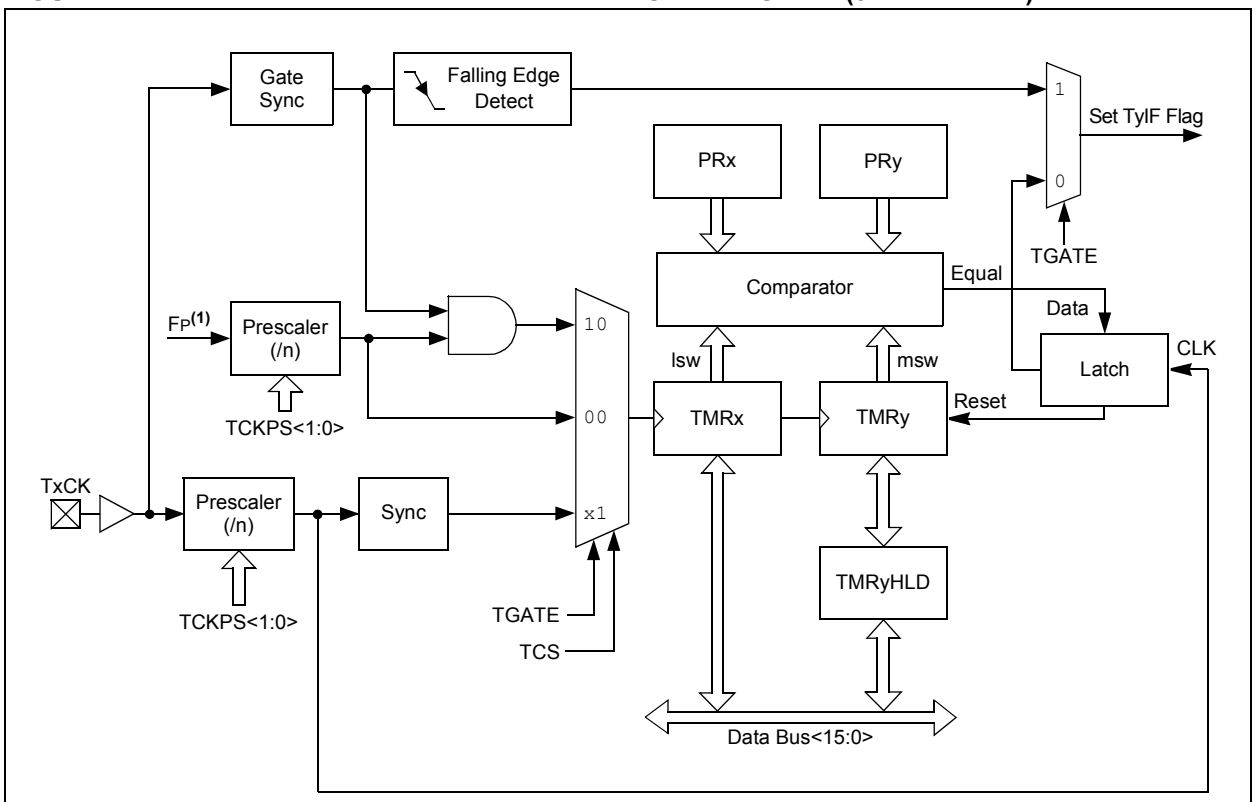

Note 1: Timerx is a Type B timer (x = 2 and 4).
2: Timery is a Type C timer (x = 3 and 5).

© 2013-2015 Microchip Technology Inc.

12.2 Timer Control Registers

REGISTER 12-1: TxCON: (TIMER2 AND TIMER4) CONTROL REGISTER

R/W-0	U-0	R/W-0	U-0	U-0	U-0	U-0	U-0
TON	—	TSIDL	—	—	—	—	—
bit 15							bit 8

U-0	R/W-0	R/W-0	R/W-0	R/W-0	U-0	R/W-0	U-0
—	TGATE	TCKPS1	TCKPS0	T32	—	TCS(1)	—
bit 7							bit 0

Legend:			
R = Readable bit	W = Writable bit	U = Unimplemented bit, read as ‘0’	
-n = Value at POR	‘1’ = Bit is set	‘0’ = Bit is cleared	x = Bit is unknown

bit 15 **TON:** Timerx On bit
When T32 = 1:
1 = Starts 32-bit Timerx/y
0 = Stops 32-bit Timerx/y
When T32 = 0:
1 = Starts 16-bit Timerx
0 = Stops 16-bit Timerx

bit 14 **Unimplemented:** Read as ‘0’

bit 13 **TSIDL:** Timerx Stop in Idle Mode bit
1 = Discontinues module operation when device enters Idle mode
0 = Continues module operation in Idle mode

bit 12-7 **Unimplemented:** Read as ‘0’

bit 6 **TGATE:** Timerx Gated Time Accumulation Enable bit
When TCS = 1:
This bit is ignored.
When TCS = 0:
1 = Gated time accumulation is enabled
0 = Gated time accumulation is disabled

bit 5-4 **TCKPS<1:0>:** Timerx Input Clock Prescale Select bits
11 = 1:256
10 = 1:64
01 = 1:8
00 = 1:1

bit 3 **T32:** 32-Bit Timer Mode Select bit
1 = Timerx and Timery form a single 32-bit timer
0 = Timerx and Timery act as two 16-bit timers

bit 2 **Unimplemented:** Read as ‘0’

bit 1 **TCS:** Timerx Clock Source Select bit(1)
1 = External clock is from pin, TxCK (on the rising edge)
0 = Internal clock (FP)

bit 0 **Unimplemented:** Read as ‘0’

Note 1: The TxCK pin is not available on all devices. Refer to the **“Pin Diagrams”** section for the available pins.

REGISTER 12-2: TyCON: (TIMER3 AND TIMER5) CONTROL REGISTER

R/W-0	U-0	R/W-0	U-0	U-0	U-0	U-0	U-0
TON(1)	—	TSIDL(2)	—	—	—	—	—
bit 15							bit 8

U-0	R/W-0	R/W-0	R/W-0	U-0	U-0	R/W-0	U-0
—	TGATE(1)	TCKPS1(1)	TCKPS1(1)	—	—	TCS(1,3)	—
bit 7							bit 0

Legend:			
R = Readable bit	W = Writable bit	U = Unimplemented bit, read as ‘0’	
-n = Value at POR	‘1’ = Bit is set	‘0’ = Bit is cleared	x = Bit is unknown

bit 15 **TON:** Timery On bit(1)
1 = Starts 16-bit Timery
0 = Stops 16-bit Timery

bit 14 **Unimplemented:** Read as ‘0’

bit 13 **TSIDL:** Timery Stop in Idle Mode bit(2)
1 = Discontinues module operation when device enters Idle mode
0 = Continues module operation in Idle mode

bit 12-7 **Unimplemented:** Read as ‘0’

bit 6 **TGATE:** Timery Gated Time Accumulation Enable bit(1)
When TCS = 1:
This bit is ignored.
When TCS = 0:
1 = Gated time accumulation is enabled
0 = Gated time accumulation is disabled

bit 5-4 **TCKPS<1:0>:** Timery Input Clock Prescale Select bits(1)
11 = 1:256
10 = 1:64
01 = 1:8
00 = 1:1

bit 3-2 **Unimplemented:** Read as ‘0’

bit 1 **TCS:** Timery Clock Source Select bit(1,3)
1 = External clock is from pin, TyCK (on the rising edge)
0 = Internal clock (FP)

bit 0 **Unimplemented:** Read as ‘0’

Note 1: When 32-bit operation is enabled (T2CON<3> = 1), these bits have no effect on Timery operation; all timer functions are set through TxCON.

2: When 32-bit timer operation is enabled (T32 = 1) in the Timerx Control register (TxCON<3>), the TSIDL bit must be cleared to operate the 32-bit timer in Idle mode.

3: The TyCK pin is not available on all devices. See the **“Pin Diagrams”** section for the available pins.

© 2013-2015 Microchip Technology Inc.

13.0 INPUT CAPTURE

Note 1: This data sheet summarizes the features of the dsPIC33EPXXGS50X family of devices. It is not intended to be a comprehensive reference source. To complement the information in this data sheet, refer to **"Input Capture"** (DS70000352) in the *"dsPIC33/PIC24 Family Reference Manual"*, which is available from the Microchip web site (www.microchip.com).

2: Some registers and associated bits described in this section may not be available on all devices. Refer to **Section 4.0 "Memory Organization"** in this data sheet for device-specific register and bit information.

The input capture module is useful in applications requiring frequency (period) and pulse measurements. The dsPIC33EPXXGS50X family devices support four input capture channels.

Key features of the input capture module include:

- Hardware-configurable for 32-bit operation in all modes by cascading two adjacent modules
- Synchronous and Trigger modes of output compare operation, with up to 21 user-selectable trigger/sync sources available
- A 4-level FIFO buffer for capturing and holding timer values for several events
- Configurable interrupt generation
- Up to six clock sources available for each module, driving a separate internal 16-bit counter

13.1 Input Capture Resources

Many useful resources are provided on the main product page of the Microchip web site for the devices listed in this data sheet. This product page contains the latest updates and additional information.

13.1.1 KEY RESOURCES

- **"Input Capture"** (DS70000352) in the *"dsPIC33/PIC24 Family Reference Manual"*
- Code Samples
- Application Notes
- Software Libraries
- Webinars
- All Related *"dsPIC33/PIC24 Family Reference Manual"* Sections
- Development Tools

FIGURE 13-1: INPUT CAPTURE x MODULE BLOCK DIAGRAM

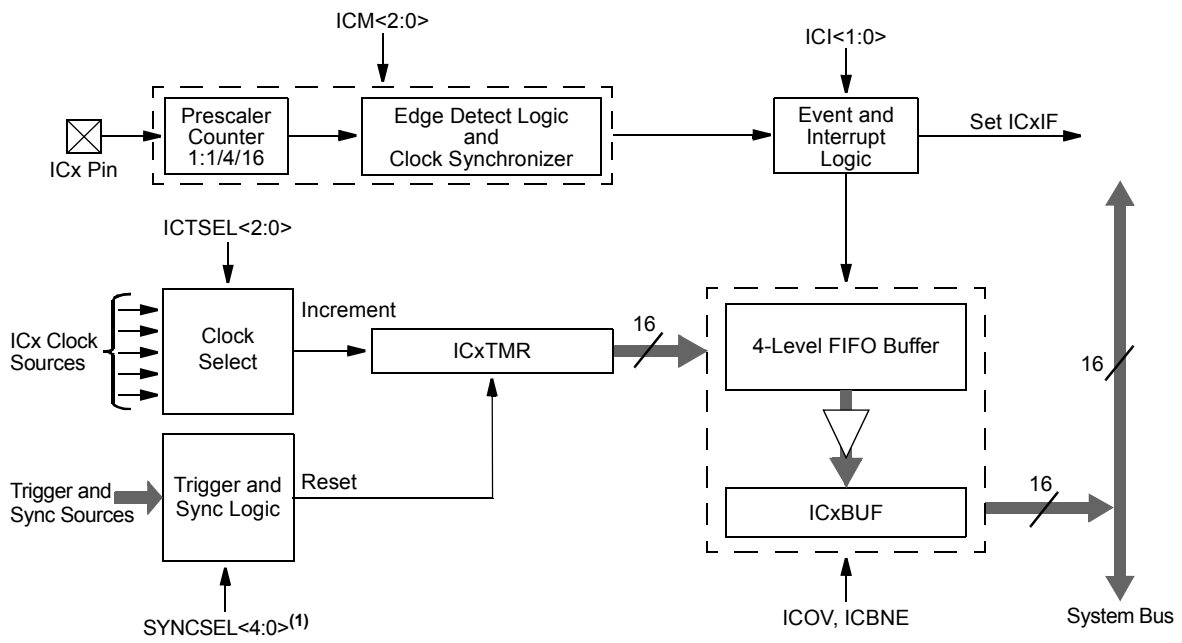

Note 1: The trigger/sync source is enabled by default and is set to Timer3 as a source. This timer must be enabled for proper ICx module operation or the trigger/sync source must be changed to another source option.

13.2 Input Capture Registers

REGISTER 13-1: ICxCON1: INPUT CAPTURE x CONTROL REGISTER 1

U-0	U-0	R/W-0	R/W-0	R/W-0	R/W-0	U-0	U-0
—	—	ICSIDL	ICTSEL2	ICTSEL1	ICTSEL0	—	—
bit 15							bit 8

U-0	R/W-0	R/W-0	R-0, HC, HS	R-0, HC, HS	R/W-0	R/W-0	R/W-0
—	ICI1	ICI0	ICOV	ICBNE	ICM2	ICM1	ICM0
bit 7							bit 0

Legend:	HC = Hardware Clearable bit	HS = Hardware Settable bit	
R = Readable bit	W = Writable bit	U = Unimplemented bit, read as ‘0’	
-n = Value at POR	‘1’ = Bit is set	‘0’ = Bit is cleared	x = Bit is unknown

bit 15-14 **Unimplemented:** Read as ‘0’

bit 13 **ICSIDL:** Input Capture x Stop in Idle Control bit
1 = Input capture will halt in CPU Idle mode
0 = Input capture will continue to operate in CPU Idle mode

bit 12-10 **ICTSEL<2:0>:** Input Capture x Timer Select bits
111 = Peripheral clock (FP) is the clock source of the ICx
110 = Reserved
101 = Reserved
100 = T1CLK is the clock source of the ICx (only the synchronous clock is supported)
011 = T5CLK is the clock source of the ICx
010 = T4CLK is the clock source of the ICx
001 = T2CLK is the clock source of the ICx
000 = T3CLK is the clock source of the ICx

bit 9-7 **Unimplemented:** Read as ‘0’

bit 6-5 **ICI<1:0>:** Number of Captures per Interrupt Select bits (this field is not used if ICM<2:0> = 001 or 111)
11 = Interrupt on every fourth capture event
10 = Interrupt on every third capture event
01 = Interrupt on every second capture event
00 = Interrupt on every capture event

bit 4 **ICOV:** Input Capture x Overflow Status Flag bit (read-only)
1 = Input capture buffer overflow has occurred
0 = No input capture buffer overflow has occurred

bit 3 **ICBNE:** Input Capture x Buffer Not Empty Status bit (read-only)
1 = Input capture buffer is not empty, at least one more capture value can be read
0 = Input capture buffer is empty

bit 2-0 **ICM<2:0>:** Input Capture x Mode Select bits
111 = Input Capture x functions as an interrupt pin only in CPU Sleep and Idle modes (rising edge detect only, all other control bits are not applicable)
110 = Unused (module is disabled)
101 = Capture mode, every 16th rising edge (Prescaler Capture mode)
100 = Capture mode, every 4th rising edge (Prescaler Capture mode)
011 = Capture mode, every rising edge (Simple Capture mode)
010 = Capture mode, every falling edge (Simple Capture mode)
001 = Capture mode, every rising and falling edge (Edge Detect mode (ICI<1:0>) is not used in this mode)
000 = Input Capture x is turned off

© 2013-2015 Microchip Technology Inc.

REGISTER 13-2: ICxCON2: INPUT CAPTURE x CONTROL REGISTER 2

U-0	U-0	U-0	U-0	U-0	U-0	U-0	R/W-0
—	—	—	—	—	—	—	IC32
bit 15							bit 8

R/W-0	R/W-0, HS	U-0	R/W-0	R/W-1	R/W-1	R/W-0	R/W-1
ICTRIG(2)	TRIGSTAT(3)	—	SYNCSEL4(4)	SYNCSEL3(4)	SYNCSEL2(4)	SYNCSEL1(4)	SYNCSEL0(4)
bit 7							bit 0

Legend:	HS = Hardware Settable bit		
R = Readable bit	W = Writable bit	U = Unimplemented bit, read as ‘0’	
-n = Value at POR	‘1’ = Bit is set	‘0’ = Bit is cleared	x = Bit is unknown

bit 15-9 **Unimplemented:** Read as ‘0’

bit 8 **IC32:** Input Capture x 32-Bit Timer Mode Select bit (Cascade mode)
1 = Odd ICx and even ICx form a single 32-bit input capture module(1)
0 = Cascade module operation is disabled

bit 7 **ICTRIG:** Input Capture x Trigger Operation Select bit(2)
1 = Input source is used to trigger the input capture timer (Trigger mode)
0 = Input source is used to synchronize the input capture timer to a timer of another module (Synchronization mode)

bit 6 **TRIGSTAT:** Timer Trigger Status bit(3)
1 = ICxTMR has been triggered and is running
0 = ICxTMR has not been triggered and is being held clear

bit 5 **Unimplemented:** Read as ‘0’

Note 1: The IC32 bit in both the odd and even ICx must be set to enable Cascade mode.
2: The input source is selected by the SYNCSEL<4:0> bits of the ICxCON2 register.
3: This bit is set by the selected input source (selected by SYNCSEL<4:0> bits); it can be read, set and cleared in software.
4: Do not use the ICx module as its own sync or trigger source.
5: This option should only be selected as a trigger source and not as a synchronization source.

REGISTER 13-2: ICxCON2: INPUT CAPTURE x CONTROL REGISTER 2 (CONTINUED)

bit 4-0 **SYNCSEL<4:0>:** Input Source Select for Synchronization and Trigger Operation bits(4)

11111 = No sync or trigger source for ICx
11110 = Reserved
11101 = Reserved
11100 = Reserved
11011 = CMP4 module synchronizes or triggers ICx(5)
11010 = CMP3 module synchronizes or triggers ICx(5)
11001 = CMP2 module synchronizes or triggers ICx(5)
11000 = CMP1 module synchronizes or triggers ICx(5)
10111 = Reserved
10110 = Reserved
10101 = Reserved
10100 = Reserved
10011 = IC4 module interrupt synchronizes or triggers ICx
10010 = IC3 module interrupt synchronizes or triggers ICx
10001 = IC2 module interrupt synchronizes or triggers ICx
10000 = IC1 module interrupt synchronizes or triggers ICx
01111 = Timer5 synchronizes or triggers ICx
01110 = Timer4 synchronizes or triggers ICx
01101 = Timer3 synchronizes or triggers ICx **(default)**
01100 = Timer2 synchronizes or triggers ICx
01011 = Timer1 synchronizes or triggers ICx
01010 = Reserved
01001 = Reserved
01000 = IC4 module synchronizes or triggers ICx
00111 = IC3 module synchronizes or triggers ICx
00110 = IC2 module synchronizes or triggers ICx
00101 = IC1 module synchronizes or triggers ICx
00100 = OC4 module synchronizes or triggers ICx
00011 = OC3 module synchronizes or triggers ICx
00010 = OC2 module synchronizes or triggers ICx
00001 = OC1 module synchronizes or triggers ICx
00000 = No sync or trigger source for ICx

Note 1: The IC32 bit in both the odd and even ICx must be set to enable Cascade mode.
2: The input source is selected by the SYNCSEL<4:0> bits of the ICxCON2 register.
3: This bit is set by the selected input source (selected by SYNCSEL<4:0> bits); it can be read, set and cleared in software.
4: Do not use the ICx module as its own sync or trigger source.
5: This option should only be selected as a trigger source and not as a synchronization source.

© 2013-2015 Microchip Technology Inc.

14.0 OUTPUT COMPARE

Note 1: This data sheet summarizes the features of the dsPIC33EPXXGS50X family of devices. It is not intended to be a comprehensive reference source. To complement the information in this data sheet, refer to **"Output Compare"** (DS70000358) in the *"dsPIC33/PIC24 Family Reference Manual"*, which is available from the Microchip web site (www.microchip.com).

2: Some registers and associated bits described in this section may not be available on all devices. Refer to **Section 4.0 "Memory Organization"** in this data sheet for device-specific register and bit information.

The output compare module can select one of six available clock sources for its time base. The module compares the value of the timer with the value of one or two Compare registers, depending on the operating mode selected. The state of the output pin changes when the timer value matches the Compare register value. The output compare module generates either a single output pulse, or a sequence of output pulses, by changing the state of the output pin on the compare match events. The output compare module can also generate interrupts on compare match events.

14.1 Output Compare Resources

Many useful resources are provided on the main product page of the Microchip web site for the devices listed in this data sheet. This product page contains the latest updates and additional information.

14.1.1 KEY RESOURCES

- **"Output Compare"** (DS70358) in the *"dsPIC33/PIC24 Family Reference Manual"*
- Code Samples
- Application Notes
- Software Libraries
- Webinars
- All Related *"dsPIC33/PIC24 Family Reference Manual"* Sections
- Development Tools

FIGURE 14-1: OUTPUT COMPARE x MODULE BLOCK DIAGRAM

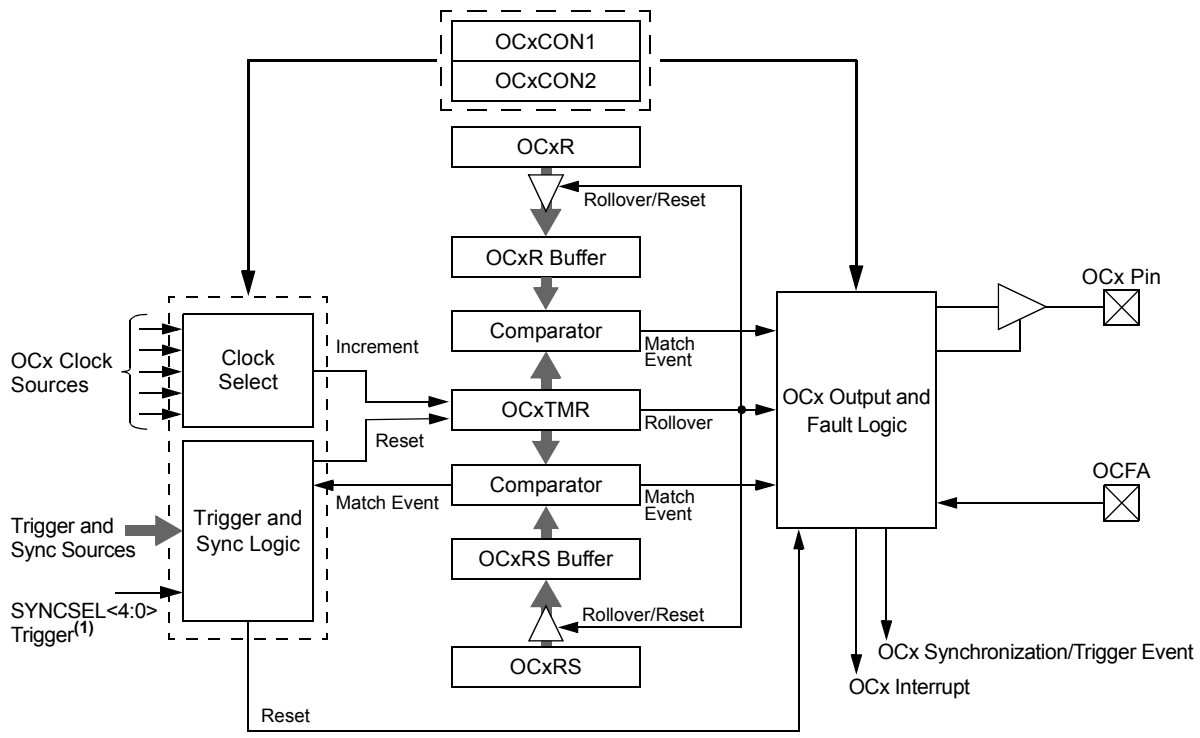

Note 1: The trigger/sync source is enabled by default and is set to Timer2 as a source. This timer must be enabled for proper OCx module operation or the trigger/sync source must be changed to another source option.

14.2 Output Compare Control Registers

REGISTER 14-1: OCxCON1: OUTPUT COMPARE x CONTROL REGISTER 1

U-0	U-0	R/W-0	R/W-0	R/W-0	R/W-0	U-0	U-0
—	—	OCSIDL	OCTSEL2	OCTSEL1	OCTSEL0	—	—
bit 15							bit 8

R/W-0	U-0	U-0	R/W-0, HSC	R/W-0	R/W-0	R/W-0	R/W-0
ENFLTA	—	—	OCFLTA	TRIGMODE	OCM2	OCM1	OCM0
bit 7							bit 0

Legend:	HSC = Hardware Settable/Clearable bit		
R = Readable bit	W = Writable bit	U = Unimplemented bit, read as ‘0’	
-n = Value at POR	‘1’ = Bit is set	‘0’ = Bit is cleared	x = Bit is unknown

bit 15-14 **Unimplemented:** Read as ‘0’

bit 13 **OCSIDL:** Output Compare x Stop in Idle Mode Control bit
1 = Output Compare x halts in CPU Idle mode
0 = Output Compare x continues to operate in CPU Idle mode

bit 12-10 **OCTSEL<2:0>:** Output Compare x Clock Select bits
111 = Peripheral clock (FP)
110 = Reserved
101 = Reserved
100 = T1CLK is the clock source of the OCx (only the synchronous clock is supported)
011 = T5CLK is the clock source of the OCx
010 = T4CLK is the clock source of the OCx
001 = T3CLK is the clock source of the OCx
000 = T2CLK is the clock source of the OCx

bit 9-8 **Unimplemented:** Read as ‘0’

bit 7 **ENFLTA:** Fault A Input Enable bit
1 = Output Compare Fault A input (OCFA) is enabled
0 = Output Compare Fault A input (OCFA) is disabled

bit 6-5 **Unimplemented:** Read as ‘0’

bit 4 **OCFLTA:** PWM Fault A Condition Status bit
1 = PWM Fault A condition on the OCFA pin has occurred
0 = No PWM Fault A condition on the OCFA pin has occurred

bit 3 **TRIGMODE:** Trigger Status Mode Select bit
1 = TRIGSTAT (OCxCON2<6>) is cleared when OCxRS = OCxTMR or in software
0 = TRIGSTAT is cleared only by software

Note 1: OCxR and OCxRS are double-buffered in PWM mode only.

© 2013-2015 Microchip Technology Inc.

REGISTER 14-1: OCxCON1: OUTPUT COMPARE x CONTROL REGISTER 1 (CONTINUED)

bit 2-0 **OCM<2:0>:** Output Compare x Mode Select bits

111 = Center-Aligned PWM mode: Output is set high when OCxTMR = OCxR and set low when OCxTMR = OCxRS(1)

110 = Edge-Aligned PWM mode: Output is set high when OCxTMR = 0 and set low when OCxTMR = OCxR(1)

101 = Double Compare Continuous Pulse mode: Initializes OCx pin low, toggles OCx state continuously on alternate matches of OCxR and OCxRS

100 = Double Compare Single-Shot mode: Initializes OCx pin low, toggles OCx state on matches of OCxR and OCxRS for one cycle

011 = Single Compare mode: Compare event with OCxR, continuously toggles OCx pin

010 = Single Compare Single-Shot mode: Initializes OCx pin high, compare event with OCxR, forces OCx pin low

001 = Single Compare Single-Shot mode: Initializes OCx pin low, compare event with OCxR, forces OCx pin high

000 = Output compare channel is disabled

Note 1: OCxR and OCxRS are double-buffered in PWM mode only.

REGISTER 14-2: OCxCON2: OUTPUT COMPARE x CONTROL REGISTER 2

R/W-0	R/W-0	R/W-0	R/W-0	U-0	U-0	U-0	R/W-0
FLTMD	FLTOUT	FLTTRIEN	OCINV	—	—	—	OC32
bit 15							bit 8

R/W-0	R/W-0, HS	R/W-0	R/W-0	R/W-1	R/W-1	R/W-0	R/W-0
OCTRIG	TRIGSTAT	OCTRIS	SYNCSEL4	SYNCSEL3	SYNCSEL2	SYNCSEL1	SYNCSEL0
bit 7							bit 0

Legend:	HS = Hardware Settable bit		
R = Readable bit	W = Writable bit	U = Unimplemented bit, read as ‘0’	
-n = Value at POR	‘1’ = Bit is set	‘0’ = Bit is cleared	x = Bit is unknown

bit 15 **FLTMD:** Fault Mode Select bit
- 1 = Fault mode is maintained until the Fault source is removed; the corresponding OCFLTA bit is cleared in software and a new PWMx period starts
- 0 = Fault mode is maintained until the Fault source is removed and a new PWMx period starts

bit 14 **FLTOUT:** Fault Out bit
- 1 = PWMx output is driven high on a Fault
- 0 = PWMx output is driven low on a Fault

bit 13 **FLTTRIEN:** Fault Output State Select bit
- 1 = OCx pin is tri-stated on a Fault condition
- 0 = OCx pin I/O state is defined by the FLTOUT bit on a Fault condition

bit 12 **OCINV:** Output Compare x Invert bit
- 1 = OCx output is inverted
- 0 = OCx output is not inverted

bit 11-9 **Unimplemented:** Read as ‘0’

bit 8 **OC32:** Cascade Two OCx Modules Enable bit (32-bit operation)
- 1 = Cascade module operation is enabled
- 0 = Cascade module operation is disabled

bit 7 **OCTRIG:** Output Compare x Trigger/Sync Select bit
- 1 = Triggers OCx from the source designated by the SYNCSELx bits
- 0 = Synchronizes OCx with the source designated by the SYNCSELx bits

bit 6 **TRIGSTAT:** Timer Trigger Status bit
- 1 = Timer source has been triggered and is running
- 0 = Timer source has not been triggered and is being held clear

bit 5 **OCTRIS:** Output Compare x Output Pin Direction Select bit
- 1 = OCx is tri-stated
- 0 = OCx module drives the OCx pin

Note 1: Do not use the OCx module as its own synchronization or trigger source.

2: When the OCy module is turned off, it sends a trigger out signal. If the OCx module uses the OCy module as a trigger source, the OCy module must be unselected as a trigger source prior to disabling it.

© 2013-2015 Microchip Technology Inc.

REGISTER 14-2: OCxCON2: OUTPUT COMPARE x CONTROL REGISTER 2 (CONTINUED)

bit 4-0 **SYNCSEL<4:0>:** Trigger/Synchronization Source Selection bits

11111 = OCxRS compare event is used for synchronization
11110 = INT2 pin synchronizes or triggers OCx
11101 = INT1 pin synchronizes or triggers OCx
11100 = Reserved
11011 = CMP4 module synchronizes or triggers OCx
11010 = CMP3 module synchronizes or triggers OCx
11001 = CMP2 module synchronizes or triggers OCx
11000 = CMP1 module synchronizes or triggers OCx
10111 = Reserved
10110 = Reserved
10101 = Reserved
10100 = Reserved
10011 = IC4 input capture interrupt event synchronizes or triggers OCx
10010 = IC3 input capture interrupt event synchronizes or triggers OCx
10001 = IC2 input capture interrupt event synchronizes or triggers OCx
10000 = IC1 input capture interrupt event synchronizes or triggers OCx
01111 = Timer5 synchronizes or triggers OCx
01110 = Timer4 synchronizes or triggers OCx
01101 = Timer3 synchronizes or triggers OCx
01100 = Timer2 synchronizes or triggers OCx **(default)**
01011 = Timer1 synchronizes or triggers OCx
01010 = Reserved
01001 = Reserved
01000 = IC4 input capture event synchronizes or triggers OCx
00111 = IC3 input capture event synchronizes or triggers OCx
00110 = IC2 input capture event synchronizes or triggers OCx
00101 = IC1 input capture event synchronizes or triggers OCx
00100 = OC4 module synchronizes or triggers OCx(1,2)
00011 = OC3 module synchronizes or triggers OCx(1,2)
00010 = OC2 module synchronizes or triggers OCx(1,2)
00001 = OC1 module synchronizes or triggers OCx(1,2)
00000 = No sync or trigger source for OCx

Note 1: Do not use the OCx module as its own synchronization or trigger source.

2: When the OCy module is turned off, it sends a trigger out signal. If the OCx module uses the OCy module as a trigger source, the OCy module must be unselected as a trigger source prior to disabling it.

NOTES:

© 2013-2015 Microchip Technology Inc.

15.0 HIGH-SPEED PWM

Note: This data sheet summarizes the features of the dsPIC33EPXXGS50X family of devices. It is not intended to be a comprehensive reference source. To complement the information in this data sheet, refer to **"High-Speed PWM Module"** (DS70000323) in the *"dsPIC33/PIC24 Family Reference Manual"*, which is available from the Microchip web site (www.microchip.com).

The high-speed PWM module on dsPIC33EPXXGS50X devices supports a wide variety of PWM modes and output formats. This PWM module is ideal for power conversion applications, such as:

- AC/DC Converters
- DC/DC Converters
- Power Factor Correction
- Uninterruptible Power Supply (UPS)
- Inverters
- Battery Chargers
- Digital Lighting

15.1 Features Overview

The high-speed PWM module incorporates the following features:

- Five PWMx generators with two outputs per generator
- Two master time base modules
- Individual time base and duty cycle for each PWM output
- Duty cycle, dead time, phase shift and a frequency resolution of 1.04 ns
- Independent Fault and current-limit inputs
- Redundant output
- True independent output
- Center-Aligned PWM mode
- Output override control
- Chop mode (also known as Gated mode)
- Special Event Trigger
- Dual trigger from PWMx to Analog-to-Digital Converter (ADC)
- PWMxL and PWMxH output pin swapping
- Independent PWMx frequency, duty cycle and phase-shift changes
- Enhanced Leading-Edge Blanking (LEB) functionality
- PWM capture functionality

Note: Duty cycle, dead time, phase shift and frequency resolution is 8.32 ns in Center-Aligned PWM mode.

Figure 15-1 conceptualizes the PWM module in a simplified block diagram. Figure 15-2 illustrates how the module hardware is partitioned for each PWMx output pair for the Complementary PWM mode.

The PWM module contains five PWM generators. The module has up to 10 PWMx output pins: PWM1H/PWM1L through PWM5H/PWM5L. For complementary outputs, these 10 I/O pins are grouped into high/low pairs.

15.2 Feature Description

The PWM module is designed for applications that require:

- High resolution at high PWM frequencies
- The ability to drive Standard, Edge-Aligned, Center-Aligned Complementary mode and Push-Pull mode outputs
- The ability to create multiphase PWM outputs

Two common, medium power converter topologies are push-pull and half-bridge. These designs require the PWM output signal to be switched between alternate pins, as provided by the Push-Pull PWM mode.

Phase-shifted PWM describes the situation where each PWM generator provides outputs, but the phase relationship between the generator outputs is specifiable and changeable.

Multiphase PWM is often used to improve DC/DC converter load transient response, and reduce the size of output filter capacitors and inductors. Multiple DC/DC converters are often operated in parallel, but phase shifted in time. A single PWM output, operating at 250 kHz, has a period of 4 μs but an array of four PWM channels, staggered by 1 μs each, yields an effective switching frequency of 1 MHz. Multiphase PWM applications typically use a fixed-phase relationship.

Variable phase PWM is useful in Zero Voltage Transition (ZVT) power converters. Here, the PWM duty cycle is always 50% and the power flow is controlled by varying the relative phase shift between the two PWM generators.

© 2013-2015 Microchip Technology Inc.

15.2.1 WRITE-PROTECTED REGISTERS

On dsPIC33EPXXGS50X family devices, write protection is implemented for the IOCONx and FCLCONx registers. The write protection feature prevents any inadvertent writes to these registers. This protection feature can be controlled by the PWMLOCK Configuration bit (FDEVOPT<0>). The default state of the write protection feature is enabled (PWMLOCK = 1). The write protection feature can be disabled by configuring PWMLOCK = 0.

To gain write access to these locked registers, the user application must write two consecutive values (0xABCD and 0x4321) to the PWMKEY register to perform the unlock operation. The write access to the IOCONx or FCLCONx registers must be the next SFR access following the unlock process. There can be no other SFR accesses during the unlock process and subsequent write access. To write to both the IOCONx and FCLCONx registers requires two unlock operations.

The correct unlocking sequence is described in Example 15-1.

EXAMPLE 15-1: PWM WRITE-PROTECTED REGISTER UNLOCK SEQUENCE

```
; Writing to FCLCON1 register requires unlock sequence

mov #0xabcd, w10       ; Load first unlock key to w10 register
mov #0x4321, w11       ; Load second unlock key to w11 register
mov #0x0000, w0        ; Load desired value of FCLCON1 register in w0
mov w10, PWMKEY        ; Write first unlock key to PWMKEY register
mov w11, PWMKEY        ; Write second unlock key to PWMKEY register
mov w0, FCLCON1        ; Write desired value to FCLCON1 register

; Set PWM ownership and polarity using the IOCON1 register
; Writing to IOCON1 register requires unlock sequence

mov #0xabcd, w10       ; Load first unlock key to w10 register
mov #0x4321, w11       ; Load second unlock key to w11 register
mov #0xF000, w0        ; Load desired value of IOCON1 register in w0
mov w10, PWMKEY        ; Write first unlock key to PWMKEY register
mov w11, PWMKEY        ; Write second unlock key to PWMKEY register
mov w0, IOCON1         ; Write desired value to IOCON1 register
```

15.3 PWM Resources

Many useful resources are provided on the main product page of the Microchip web site for the devices listed in this data sheet. This product page contains the latest updates and additional information.

15.3.1 KEY RESOURCES

- Code Samples
- Application Notes
- Software Libraries
- Webinars
- All Related *“dsPIC33/PIC24 Family Reference Manual”* Sections
- Development Tools

© 2013-2015 Microchip Technology Inc.

FIGURE 15-1: HIGH-SPEED PWM MODULE ARCHITECTURAL DIAGRAM

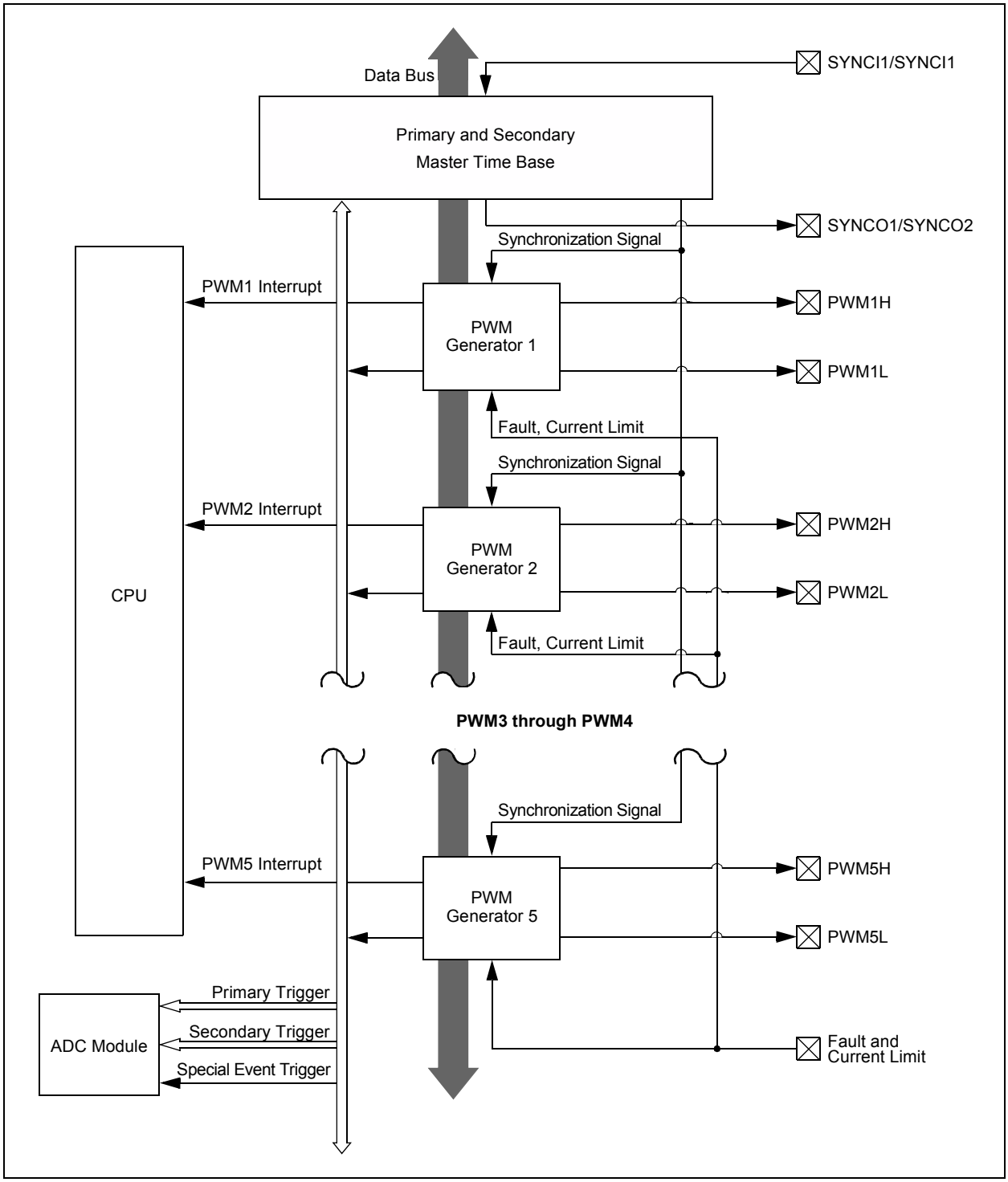

FIGURE 15-2: SIMPLIFIED CONCEPTUAL BLOCK DIAGRAM OF THE HIGH-SPEED PWM

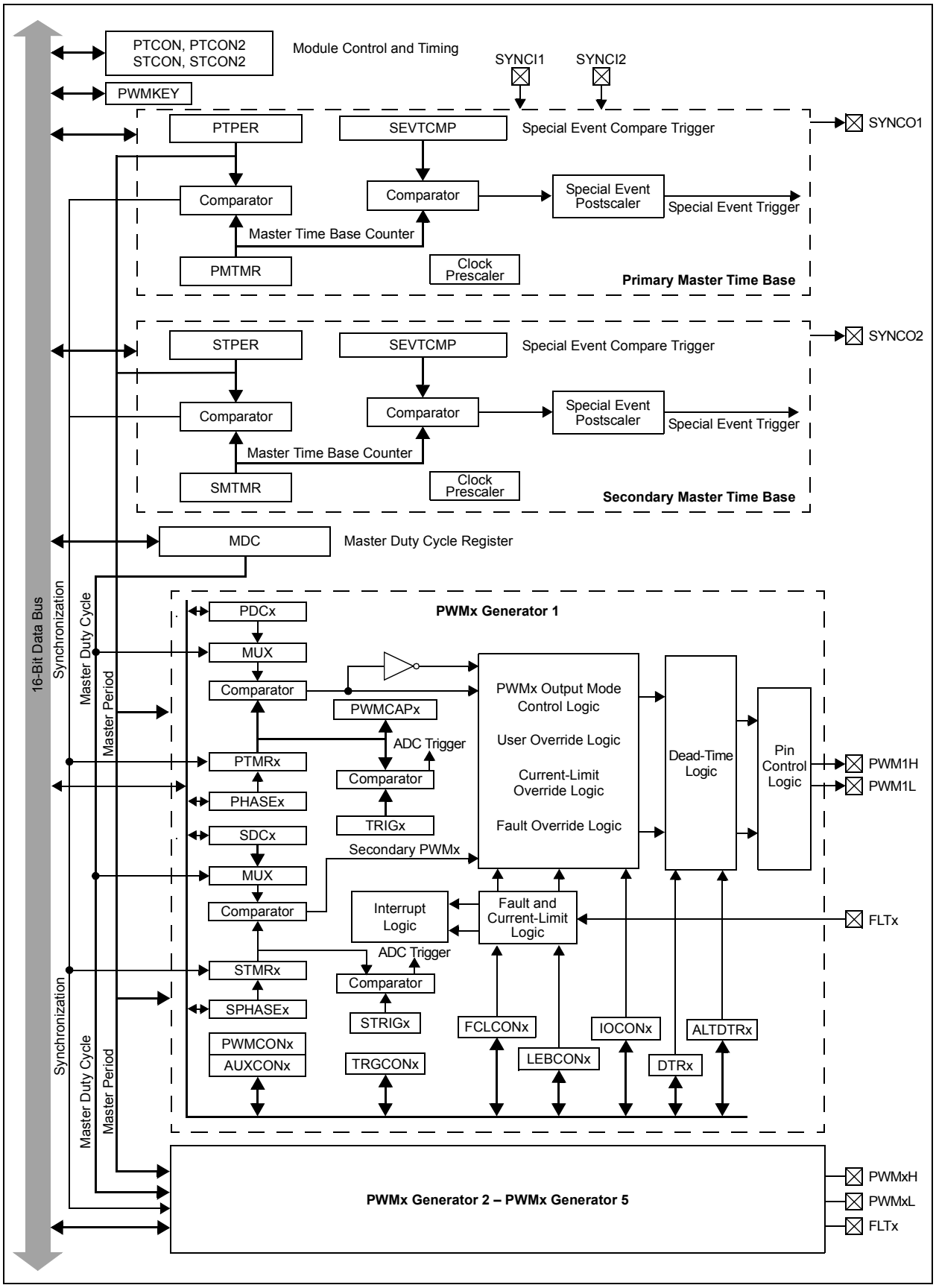

© 2013-2015 Microchip Technology Inc.

REGISTER 15-1: PTCON: PWMx TIME BASE CONTROL REGISTER

R/W-0	U-0	R/W-0	R-0, HSC	R/W-0	R/W-0	R/W-0	R/W-0
PTEN	—	PTSIDL	SESTAT	SEIEN	EIPU(1)	SYNCPOL(1)	SYNCOEN(1)
bit 15							bit 8

R/W-0	R/W-0	R/W-0	R/W-0	R/W-0	R/W-0	R/W-0	R/W-0
SYNCEN(1)	SYNCSRC2(1)	SYNCSRC1(1)	SYNCSRC0(1)	SEVTPS3(1)	SEVTPS2(1)	SEVTPS1(1)	SEVTPS0(1)
bit 7							bit 0

Legend:	HSC = Hardware Settable/Clearable bit		
R = Readable bit	W = Writable bit	U = Unimplemented bit, read as ‘0’	
-n = Value at POR	‘1’ = Bit is set	‘0’ = Bit is cleared	x = Bit is unknown

bit 15 **PTEN:** PWMx Module Enable bit
1 = PWMx module is enabled
0 = PWMx module is disabled

bit 14 **Unimplemented:** Read as ‘0’

bit 13 **PTSIDL:** PWMx Time Base Stop in Idle Mode bit
1 = PWMx time base halts in CPU Idle mode
0 = PWMx time base runs in CPU Idle mode

bit 12 **SESTAT:** Special Event Interrupt Status bit
1 = Special event interrupt is pending
0 = Special event interrupt is not pending

bit 11 **SEIEN:** Special Event Interrupt Enable bit
1 = Special event interrupt is enabled
0 = Special event interrupt is disabled

bit 10 **EIPU:** Enable Immediate Period Updates bit(1)
1 = Active Period register is updated immediately
0 = Active Period register updates occur on PWMx cycle boundaries

bit 9 **SYNCPOL:** Synchronize Input and Output Polarity bit(1)
1 = SYNCIx/SYNCO1 polarity is inverted (active-low)
0 = SYNCIx/SYNCO1 is active-high

bit 8 **SYNCOEN:** Primary Time Base Synchronization Enable bit(1)
1 = SYNCO1 output is enabled
0 = SYNCO1 output is disabled

bit 7 **SYNCEN:** External Time Base Synchronization Enable bit(1)
1 = External synchronization of primary time base is enabled
0 = External synchronization of primary time base is disabled

bit 6-4 **SYNCSRC<2:0>:** Synchronous Source Selection bits(1)
111 = Reserved
101 = Reserved
100 = Reserved
011 = Reserved
010 = Reserved
001 = SYNCI2
000 = SYNCI1

Note 1: These bits should be changed only when PTEN = 0. In addition, when using the SYNCIx feature, the user application must program the Period register with a value that is slightly larger than the expected period of the external synchronization input signal.

REGISTER 15-1: PTCON: PWMx TIME BASE CONTROL REGISTER (CONTINUED)

bit 3-0 **SEVTPS<3:0>:** PWMx Special Event Trigger Output Postscaler Select bits(1)

1111 = 1:16 Postscaler generates a Special Event Trigger on every sixteenth compare match event
•
•
•
0001 = 1:2 Postscaler generates a Special Event Trigger on every second compare match event
0000 = 1:1 Postscaler generates a Special Event Trigger on every compare match event

Note 1: These bits should be changed only when PTEN = 0. In addition, when using the SYNCIx feature, the user application must program the Period register with a value that is slightly larger than the expected period of the external synchronization input signal.

REGISTER 15-2: PTCON2: PWMx CLOCK DIVIDER SELECT REGISTER 2

U-0	U-0	U-0	U-0	U-0	U-0	U-0	U-0
—	—	—	—	—	—	—	—
bit 15							bit 8

U-0	U-0	U-0	U-0	U-0	R/W-0	R/W-0	R/W-0
—	—	—	—	—	PCLKDIV<2:0>(1)		
bit 7							bit 0

Legend:			
R = Readable bit	W = Writable bit	U = Unimplemented bit, read as ‘0’	
-n = Value at POR	‘1’ = Bit is set	‘0’ = Bit is cleared	x = Bit is unknown

bit 15-3 **Unimplemented:** Read as ‘0’

bit 2-0 **PCLKDIV<2:0>:** PWMx Input Clock Prescaler (Divider) Select bits(1)

111 = Reserved
110 = Divide-by-64, maximum PWM timing resolution
101 = Divide-by-32, maximum PWM timing resolution
100 = Divide-by-16, maximum PWM timing resolution
011 = Divide-by-8, maximum PWM timing resolution
010 = Divide-by-4, maximum PWM timing resolution
001 = Divide-by-2, maximum PWM timing resolution
000 = Divide-by-1, maximum PWM timing resolution (power-on default)

Note 1: These bits should be changed only when PTEN = 0. Changing the clock selection during operation will yield unpredictable results.

© 2013-2015 Microchip Technology Inc.

REGISTER 15-3: PTPER: PWMx PRIMARY MASTER TIME BASE PERIOD REGISTER(1,2)

R/W-1	R/W-1	R/W-1	R/W-1	R/W-1	R/W-1	R/W-1	R/W-1
PTPER<15:8>							
bit 15							bit 8

R/W-1	R/W-1	R/W-1	R/W-1	R/W-1	R/W-0	R/W-0	R/W-0
PTPER<7:0>							
bit 7							bit 0

Legend:			
R = Readable bit	W = Writable bit	U = Unimplemented bit, read as ‘0’	
-n = Value at POR	‘1’ = Bit is set	‘0’ = Bit is cleared	x = Bit is unknown

bit 15-0 **PTPER<15:0>:** Primary Master Time Base (PMTMR) Period Value bits

Note 1: The PWMx time base has a minimum value of 0x0010 and a maximum value of 0xFFF8.

2: Any period value that is less than 0x0028 must have the Least Significant 3 bits set to ‘0’, thus yielding a period resolution at 8.32 ns (at fastest auxiliary clock rate).

REGISTER 15-4: SEVTCMP: PWMx SPECIAL EVENT COMPARE REGISTER(1)

R/W-0	R/W-0	R/W-0	R/W-0	R/W-0	R/W-0	R/W-0	R/W-0
SEVTCMP<12:5>							
bit 15							bit 8

R/W-0	R/W-0	R/W-0	R/W-0	R/W-0	U-0	U-0	U-0
SEVTCMP<4:0>					—	—	—
bit 7							bit 0

Legend:			
R = Readable bit	W = Writable bit	U = Unimplemented bit, read as ‘0’	
-n = Value at POR	‘1’ = Bit is set	‘0’ = Bit is cleared	x = Bit is unknown

bit 15-3 **SEVTCMP<12:0>:** Special Event Compare Count Value bits

bit 2-0 **Unimplemented:** Read as ‘0’

Note 1: One LSB = 1.04 ns (at fastest auxiliary clock rate); therefore, the minimum SEVTCMP resolution is 8.32 ns.

REGISTER 15-5: STCON: PWMx SECONDARY MASTER TIME BASE CONTROL REGISTER

U-0	U-0	U-0	R-0, HSC	R/W-0	R/W-0	R/W-0	R/W-0
—	—	—	SESTAT	SEIEN	EIPU[1]	SYNCPOL	SYNCOEN
bit 15							bit 8

R/W-0	R/W-0	R/W-0	R/W-0	R/W-0	R/W-0	R/W-0	R/W-0
SYNCEN	SYNCSRC2	SYNCSRC1	SYNCSRC0	SEVTPS3	SEVTPS2	SEVTPS1	SEVTPS0
bit 7							bit 0

Legend:	HSC = Hardware Settable/Clearable bit		
R = Readable bit	W = Writable bit	U = Unimplemented bit, read as ‘0’	
-n = Value at POR	‘1’ = Bit is set	‘0’ = Bit is cleared	x = Bit is unknown

bit 15-13 **Unimplemented:** Read as ‘0’

bit 12 **SESTAT:** Special Event Interrupt Status bit
1 = Secondary special event interrupt is pending
0 = Secondary special event interrupt is not pending

bit 11 **SEIEN:** Special Event Interrupt Enable bit
1 = Secondary special event interrupt is enabled
0 = Secondary special event interrupt is disabled

bit 10 **EIPU:** Enable Immediate Period Updates bit[1]
1 = Active Secondary Period register is updated immediately
0 = Active Secondary Period register updates occur on PWMx cycle boundaries

bit 9 **SYNCPOL:** Synchronize Input and Output Polarity bit
1 = SYNCIx/SYNCO2 polarity is inverted (active-low)
0 = SYNCIx/SYNCO2 polarity is active-high

bit 8 **SYNCOEN:** Secondary Master Time Base Synchronization Enable bit
1 = SYNCO2 output is enabled
0 = SYNCO2 output is disabled

bit 7 **SYNCEN:** External Secondary Master Time Base Synchronization Enable bit
1 = External synchronization of secondary time base is enabled
0 = External synchronization of secondary time base is disabled

bit 6-4 **SYNCSRC<2:0>:** Secondary Time Base Sync Source Selection bits
111 = Reserved
101 = Reserved
100 = Reserved
011 = Reserved
010 = Reserved
001 = SYNCI2
000 = SYNCI1

bit 3-0 **SEVTPS<3:0>:** PWMx Secondary Special Event Trigger Output Postscaler Select bits
1111 = 1:16 Postcale
0001 = 1:2 Postcale
•
•
•
0000 = 1:1 Postscale

Note 1: This bit only applies to the secondary master time base period.

© 2013-2015 Microchip Technology Inc.

REGISTER 15-6: STCON2: PWMx SECONDARY CLOCK DIVIDER SELECT REGISTER 2

U-0	U-0	U-0	U-0	U-0	U-0	U-0	U-0
—	—	—	—	—	—	—	—
bit 15							bit 8

U-0	U-0	U-0	U-0	U-0	R/W-0	R/W-0	R/W-0
—	—	—	—	—	PCLKDIV<2:0>(1)		
bit 7							bit 0

Legend:			
R = Readable bit	W = Writable bit	U = Unimplemented bit, read as ‘0’	
-n = Value at POR	‘1’ = Bit is set	‘0’ = Bit is cleared	x = Bit is unknown

bit 15-3 **Unimplemented:** Read as ‘0’

bit 2-0 **PCLKDIV<2:0>:** PWMx Input Clock Prescaler (Divider) Select bits(1)

111 = Reserved
110 = Divide-by-64, maximum PWM timing resolution
101 = Divide-by-32, maximum PWM timing resolution
100 = Divide-by-16, maximum PWM timing resolution
011 = Divide-by-8, maximum PWM timing resolution
010 = Divide-by-4, maximum PWM timing resolution
001 = Divide-by-2, maximum PWM timing resolution
000 = Divide-by-1, maximum PWM timing resolution (power-on default)

Note 1: These bits should be changed only when PTEN = 0. Changing the clock selection during operation will yield unpredictable results.

REGISTER 15-7: STPER: PWMx SECONDARY MASTER TIME BASE PERIOD REGISTER(1,2)

R/W-1	R/W-1	R/W-1	R/W-1	R/W-1	R/W-1	R/W-1	R/W-1
STPER<15:8>							
bit 15							bit 8

R/W-1	R/W-1	R/W-1	R/W-1	R/W-1	R/W-1	R/W-1	R/W-1
STPER<7:0>							
bit 7							bit 0

Legend:			
R = Readable bit	W = Writable bit	U = Unimplemented bit, read as ‘0’	
-n = Value at POR	‘1’ = Bit is set	‘0’ = Bit is cleared	x = Bit is unknown

bit 15-0 **STPER<15:0>:** Secondary Master Time Base (SMTMR) Period Value bits

Note 1: The PWMx time base has a minimum value of 0x0010 and a maximum value of 0xFFF8.

2: Any period value that is less than 0x0028 must have the Least Significant 3 bits set to ‘0’, thus yielding a period resolution at 8.32 ns (at fastest auxiliary clock rate).

REGISTER 15-8: SSEVTCMP: PWMx SECONDARY SPECIAL EVENT COMPARE REGISTER(1)

R/W-0	R/W-0	R/W-0	R/W-0	R/W-0	R/W-0	R/W-0	R/W-0
SSEVTCMP<12:5>							
bit 15							bit 8

R/W-0	R/W-0	R/W-0	R/W-0	R/W-0	U-0	U-0	U-0
SSEVTCMP<4:0>					—	—	—
bit 7							bit 0

Legend:			
R = Readable bit	W = Writable bit	U = Unimplemented bit, read as ‘0’	
-n = Value at POR	‘1’ = Bit is set	‘0’ = Bit is cleared	x = Bit is unknown

bit 15-3 **SSEVTCMP<12:0>:** Special Event Compare Count Value bits

bit 2-0 **Unimplemented:** Read as ‘0’

Note 1: One LSB = 1.04 ns (at fastest auxiliary clock rate); therefore, the minimum SEVTCMP resolution is 8.32 ns.

REGISTER 15-9: CHOP: PWMx CHOP CLOCK GENERATOR REGISTER(1)

R/W-0	U-0	U-0	U-0	U-0	U-0	R/W-0	R/W-0
CHPCLKEN	—	—	—	—	—	CHOPCLK6	CHOPCLK5
bit 15							bit 8

R/W-0	R/W-0	R/W-0	R/W-0	R/W-0	U-0	U-0	U-0
CHOPCLK4	CHOPCLK3	CHOPCLK2	CHOPCLK1	CHOPCLK0	—	—	—
bit 7							bit 0

Legend:			
R = Readable bit	W = Writable bit	U = Unimplemented bit, read as ‘0’	
-n = Value at POR	‘1’ = Bit is set	‘0’ = Bit is cleared	x = Bit is unknown

bit 15 **CHPCLKEN:** Enable Chop Clock Generator bit
1 = Chop clock generator is enabled
0 = Chop clock generator is disabled

bit 14-10 **Unimplemented:** Read as ‘0’

bit 9-3 **CHOPCLK<6:0>:** Chop Clock Divider bits
Value is in 8.32 ns increments. The frequency of the chop clock signal is given by:
Chop Frequency = 1/(16.64 * (CHOP<7:3> + 1) * Primary Master PWM Input Clock Period)

bit 2-0 **Unimplemented:** Read as ‘0’

Note 1: The chop clock generator operates with the primary PWMx clock prescaler (PCLKDIV<2:0>) in the PTCON2 register (Register 15-2).

© 2013-2015 Microchip Technology Inc.

REGISTER 15-10: MDC: PWMx MASTER DUTY CYCLE REGISTER(1,2)

R/W-0	R/W-0	R/W-0	R/W-0	R/W-0	R/W-0	R/W-0	R/W-0
MDC<15:8>							
bit 15							bit 8

R/W-0	R/W-0	R/W-0	R/W-0	R/W-0	R/W-0	R/W-0	R/W-0
MDC<7:0>							
bit 7							bit 0

Legend:			
R = Readable bit	W = Writable bit	U = Unimplemented bit, read as ‘0’	
-n = Value at POR	‘1’ = Bit is set	‘0’ = Bit is cleared	x = Bit is unknown

bit 15-0 **MDC<15:0>:** PWMx Master Duty Cycle Value bits

Note 1: The smallest pulse width that can be generated on the PWMx output corresponds to a value of 0x0008, while the maximum pulse width generated corresponds to a value of Period – 0x0008.

2: As the duty cycle gets closer to 0% or 100% of the PWMx period (0 to 40 ns, depending on the mode of operation), PWMx duty cycle resolution will increase from 1 to 3 LSBs.

REGISTER 15-11: PWMKEY: PWMx PROTECTION LOCK/UNLOCK KEY REGISTER

R/W-0	R/W-0	R/W-0	R/W-0	R/W-0	R/W-0	R/W-0	R/W-0
PWMKEY<15:8>							
bit 15							bit 8

R/W-0	R/W-0	R/W-0	R/W-0	R/W-0	R/W-0	R/W-0	R/W-0
PWMKEY<7:0>							
bit 7							bit 0

Legend:			
R = Readable bit	W = Writable bit	U = Unimplemented bit, read as ‘0’	
-n = Value at POR	‘1’ = Bit is set	‘0’ = Bit is cleared	x = Bit is unknown

bit 15-0 **PWMKEY<15:0>:** PWMx Protection Lock/Unlock Key Value bits

REGISTER 15-12: PWMCONx: PWMx CONTROL REGISTER (x = 1 to 5)

R-0, HSC	R-0, HSC	R-0, HSC	R/W-0	R/W-0	R/W-0	R/W-0	R/W-0
FLTSTAT(1)	CLSTAT(1)	TRGSTAT	FLTIEN	CLIEN	TRGIEN	ITB(3)	MDCS(3)
bit 15							bit 8

R/W-0	R/W-0	U-0	U-0	R/W-0	R/W-0	R/W-0	R/W-0
DTC1	DTC0	—	—	MTBS	CAM(2,3,4)	XPRES(5)	IUE
bit 7							bit 0

Legend:	HSC = Hardware Settable/Clearable bit		
R = Readable bit	W = Writable bit	U = Unimplemented bit, read as ‘0’	
-n = Value at POR	‘1’ = Bit is set	‘0’ = Bit is cleared	x = Bit is unknown

bit 15 **FLTSTAT:** Fault Interrupt Status bit(1)
1 = Fault interrupt is pending
0 = No Fault interrupt is pending
This bit is cleared by setting FLTIEN = 0.

bit 14 **CLSTAT:** Current-Limit Interrupt Status bit(1)
1 = Current-limit interrupt is pending
0 = No current-limit interrupt is pending
This bit is cleared by setting CLIEN = 0.

bit 13 **TRGSTAT:** Trigger Interrupt Status bit
1 = Trigger interrupt is pending
0 = No trigger interrupt is pending
This bit is cleared by setting TRGIEN = 0.

bit 12 **FLTIEN:** Fault Interrupt Enable bit
1 = Fault interrupt is enabled
0 = Fault interrupt is disabled and the FLTSTAT bit is cleared

bit 11 **CLIEN:** Current-Limit Interrupt Enable bit
1 = Current-limit interrupt is enabled
0 = Current-limit interrupt is disabled and the CLSTAT bit is cleared

bit 10 **TRGIEN:** Trigger Interrupt Enable bit
1 = A trigger event generates an interrupt request
0 = Trigger event interrupts are disabled and the TRGSTAT bit is cleared

bit 9 **ITB:** Independent Time Base Mode bit(3)
1 = PHASEx/SPHASEx registers provide the time base period for this PWMx generator
0 = PTPER register provides timing for this PWMx generator

bit 8 **MDCS:** Master Duty Cycle Register Select bit(3)
1 = MDC register provides duty cycle information for this PWMx generator
0 = PDCx and SDCx registers provide duty cycle information for this PWMx generator

Note 1: Software must clear the interrupt status here and in the corresponding IFSx bit in the interrupt controller.

2: The Independent Time Base mode (ITB = 1) must be enabled to use Center-Aligned mode. If ITB = 0, the CAM bit is ignored.

3: These bits should not be changed after the PWMx is enabled by setting PTEN = 1 (PTCON<15>).

4: Center-Aligned mode ignores the Least Significant 3 bits of the Duty Cycle, Phase and Dead-Time registers. The highest Center-Aligned mode resolution available is 8.32 ns with the clock prescaler set to the fastest clock.

5: Configure CLMOD = 0 (FCLCONx<8>) and ITB = 1 (PWMCONx<9>) to operate in External Period Reset mode.

© 2013-2015 Microchip Technology Inc.

REGISTER 15-12: PWMCONx: PWMx CONTROL REGISTER (x = 1 to 5) (CONTINUED)

bit 7-6 **DTC<1:0>:** Dead-Time Control bits
11 = Reserved
10 = Dead-time function is disabled
01 = Negative dead time is actively applied for Complementary Output mode
00 = Positive dead time is actively applied for all Output modes

bit 5-4 **Unimplemented:** Read as '0'

bit 3 **MTBS:** Master Time Base Select bit
1 = PWMx generator uses the secondary master time base for synchronization and the clock source for the PWMx generation logic (if secondary time base is available)
0 = PWMx generator uses the primary master time base for synchronization and the clock source for the PWMx generation logic

bit 2 **CAM:** Center-Aligned Mode Enable bit(2,3,4)
1 = Center-Aligned mode is enabled
0 = Edge-Aligned mode is enabled

bit 1 **XPRES:** External PWMx Reset Control bit(5)
1 = Current-limit source resets the time base for this PWMx generator if it is in Independent Time Base mode
0 = External pins do not affect the PWMx time base

bit 0 **IUE:** Immediate Update Enable bit
1 = Updates to the active Duty Cycle, Phase Offset, Dead-Time and local Time Base Period registers are immediate
0 = Updates to the active Duty Cycle, Phase Offset, Dead-Time and local Time Base Period registers are synchronized to the local PWMx time base

Note 1: Software must clear the interrupt status here and in the corresponding IFSx bit in the interrupt controller.
2: The Independent Time Base mode (ITB = 1) must be enabled to use Center-Aligned mode. If ITB = 0, the CAM bit is ignored.
3: These bits should not be changed after the PWMx is enabled by setting PTEN = 1 (PTCON<15>).
4: Center-Aligned mode ignores the Least Significant 3 bits of the Duty Cycle, Phase and Dead-Time registers. The highest Center-Aligned mode resolution available is 8.32 ns with the clock prescaler set to the fastest clock.
5: Configure CLMOD = 0 (FCLCONx<8>) and ITB = 1 (PWMCONx<9>) to operate in External Period Reset mode.

REGISTER 15-13: PDCx: PWMx GENERATOR DUTY CYCLE REGISTER (x = 1 to 5)(1,2,3)

R/W-0	R/W-0	R/W-0	R/W-0	R/W-0	R/W-0	R/W-0	R/W-0
PDCx<15:8>							
bit 15							bit 8

R/W-0	R/W-0	R/W-0	R/W-0	R/W-0	R/W-0	R/W-0	R/W-0
PDCx<7:0>							
bit 7							bit 0

Legend:			
R = Readable bit	W = Writable bit	U = Unimplemented bit, read as ‘0’	
-n = Value at POR	‘1’ = Bit is set	‘0’ = Bit is cleared	x = Bit is unknown

bit 15-0 **PDCx<15:0>:** PWMx Generator Duty Cycle Value bits

Note 1: In Independent PWM mode, the PDCx register controls the PWMxH duty cycle only. In the Complementary, Redundant and Push-Pull PWM modes, the PDCx register controls the duty cycle of both the PWMxH and PWMxL.

2: The smallest pulse width that can be generated on the PWMx output corresponds to a value of 0x0008, while the maximum pulse width generated corresponds to a value of Period – 0x0008.

3: As the duty cycle gets closer to 0% or 100% of the PWMx period (0 to 40 ns, depending on the mode of operation), PWMx duty cycle resolution will increase from 1 to 3 LSBs.

REGISTER 15-14: SDCx: PWMx SECONDARY DUTY CYCLE REGISTER (x = 1 to 5)(1,2,3)

R/W-0	R/W-0	R/W-0	R/W-0	R/W-0	R/W-0	R/W-0	R/W-0
SDCx<15:8>							
bit 15							bit 8

R/W-0	R/W-0	R/W-0	R/W-0	R/W-0	R/W-0	R/W-0	R/W-0
SDCx<7:0>							
bit 7							bit 0

Legend:			
R = Readable bit	W = Writable bit	U = Unimplemented bit, read as ‘0’	
-n = Value at POR	‘1’ = Bit is set	‘0’ = Bit is cleared	x = Bit is unknown

bit 15-0 **SDCx<15:0>:** PWMx Secondary Duty Cycle for PWMxL Output Pin bits

Note 1: The SDCx register is used in Independent PWM mode only. When used in Independent PWM mode, the SDCx register controls the PWMxL duty cycle.

2: The smallest pulse width that can be generated on the PWMx output corresponds to a value of 0x0008, while the maximum pulse width generated corresponds to a value of Period – 0x0008.

3: As the duty cycle gets closer to 0% or 100% of the PWMx period (0 to 40 ns, depending on the mode of operation), PWMx duty cycle resolution will increase from 1 to 3 LSBs.

© 2013-2015 Microchip Technology Inc.

REGISTER 15-15: PHASEx: PWMx PRIMARY PHASE-SHIFT REGISTER (x = 1 to 5)[1,2]

R/W-0	R/W-0	R/W-0	R/W-0	R/W-0	R/W-0	R/W-0	R/W-0
PHASEx<15:8>							
bit 15							bit 8

R/W-0	R/W-0	R/W-0	R/W-0	R/W-0	R/W-0	R/W-0	R/W-0
PHASEx<7:0>							
bit 7							bit 0

Legend:			
R = Readable bit	W = Writable bit	U = Unimplemented bit, read as ‘0’	
-n = Value at POR	‘1’ = Bit is set	‘0’ = Bit is cleared	x = Bit is unknown

bit 15-0 **PHASEx<15:0>:** PWMx Phase-Shift Value or Independent Time Base Period for the PWMx Generator bits

Note 1: If PWMCONx<9> = `0`, the following applies based on the mode of operation:
- Complementary, Redundant and Push-Pull Output mode (IOCONx<11:10> = `00`, `01` or `10`); PHASEx<15:0> = Phase-shift value for PWMxH and PWMxL outputs
- True Independent Output mode (IOCONx<11:10> = `11`); PHASEx<15:0> = Phase-shift value for PWMxH only
- When the PHASEx/SPHASEx registers provide the phase shift with respect to the master time base; therefore, the valid range is 0x0000 through period

2: If PWMCONx<9> = `1`, the following applies based on the mode of operation:
- Complementary, Redundant, and Push-Pull Output mode (IOCONx<11:10> = `00`, `01` or `10`); PHASEx<15:0> = Independent time base period value for PWMxH and PWMxL
- True Independent Output mode (IOCONx<11:10> = `11`); PHASEx<15:0> = Independent time base period value for PWMxH only
- When the PHASEx/SPHASEx registers provide the local period, the valid range is 0x0000 through 0xFFF8

REGISTER 15-16: SPHASEx: PWMx SECONDARY PHASE-SHIFT REGISTER (x = 1 to 5)(1,2)

R/W-0	R/W-0	R/W-0	R/W-0	R/W-0	R/W-0	R/W-0	R/W-0
SPHASEx<15:8>							
bit 15							bit 8

R/W-0	R/W-0	R/W-0	R/W-0	R/W-0	R/W-0	R/W-0	R/W-0
SPHASEx<7:0>							
bit 7							bit 0

Legend:			
R = Readable bit	W = Writable bit	U = Unimplemented bit, read as ‘0’	
-n = Value at POR	‘1’ = Bit is set	‘0’ = Bit is cleared	x = Bit is unknown

bit 15-0 **SPHASEx<15:0>:** Secondary Phase Offset for PWMxL Output Pin bits (used in Independent PWM mode only)

Note 1: If PWMCONx<9> = `0`, the following applies based on the mode of operation:
- Complementary, Redundant and Push-Pull Output mode (IOCONx<11:10> = `00`, `01` or `10`); SPHASEx<15:0> = Not used
- True Independent Output mode (IOCONx<11:10> = `11`), PHASEx<15:0> = Phase-shift value for PWMxL only

2: If PWMCONx<9> = `1`, the following applies based on the mode of operation:
- Complementary, Redundant and Push-Pull Output mode (IOCONx<11:10> = `00`, `01` or `10`); SPHASEx<15:0> = Not used
- True Independent Output mode (IOCONx<11:10> = `11`); PHASEx<15:0> = Independent time base period value for PWMxL only
- When the PHASEx/SPHASEx registers provide the local period, the valid range of values is 0x0010-0xFFF8

© 2013-2015 Microchip Technology Inc.

REGISTER 15-17: DTRx: PWMx DEAD-TIME REGISTER (x = 1 to 5)

U-0	U-0	R/W-0	R/W-0	R/W-0	R/W-0	R/W-0	R/W-0
—	—	DTRx<13:8>					
bit 15							bit 8

R/W-0	R/W-0	R/W-0	R/W-0	R/W-0	R/W-0	R/W-0	R/W-0
DTRx<7:0>							
bit 7							bit 0

Legend:			
R = Readable bit	W = Writable bit	U = Unimplemented bit, read as ‘0’	
-n = Value at POR	‘1’ = Bit is set	‘0’ = Bit is cleared	x = Bit is unknown

bit 15-14 **Unimplemented:** Read as ‘0’

bit 13-0 **DTRx<13:0>:** Unsigned 14-Bit Dead-Time Value for PWMx Dead-Time Unit bits

REGISTER 15-18: ALTDTRx: PWMx ALTERNATE DEAD-TIME REGISTER (x = 1 to 5)

U-0	U-0	R/W-0	R/W-0	R/W-0	R/W-0	R/W-0	R/W-0
—	—	ALTDTRx<13:8>					
bit 15							bit 8

R/W-0	R/W-0	R/W-0	R/W-0	R/W-0	R/W-0	R/W-0	R/W-0
ALTDTRx<7:0>							
bit 7							bit 0

Legend:			
R = Readable bit	W = Writable bit	U = Unimplemented bit, read as ‘0’	
-n = Value at POR	‘1’ = Bit is set	‘0’ = Bit is cleared	x = Bit is unknown

bit 15-14 **Unimplemented:** Read as ‘0’

bit 13-0 **ALTDTRx<13:0>:** Unsigned 14-Bit Dead-Time Value for PWMx Dead-Time Unit bits

REGISTER 15-19: TRGCONx: PWMx TRIGGER CONTROL REGISTER (x = 1 to 5)

R/W-0	R/W-0	R/W-0	R/W-0	U-0	U-0	U-0	U-0
TRGDIV3	TRGDIV2	TRGDIV1	TRGDIV0	—	—	—	—
bit 15							bit 8

R/W-0	U-0	R/W-0	R/W-0	R/W-0	R/W-0	R/W-0	R/W-0
DTM(1)	—	TRGSTRT5	TRGSTRT4	TRGSTRT3	TRGSTRT2	TRGSTRT1	TRGSTRT0
bit 7							bit 0

Legend:			
R = Readable bit	W = Writable bit	U = Unimplemented bit, read as ‘0’	
-n = Value at POR	‘1’ = Bit is set	‘0’ = Bit is cleared	x = Bit is unknown

bit 15-12 **TRGDIV<3:0>:** Trigger # Output Divider bits

`1111` = Trigger output for every 16th trigger event
`1110` = Trigger output for every 15th trigger event
`1101` = Trigger output for every 14th trigger event
`1100` = Trigger output for every 13th trigger event
`1011` = Trigger output for every 12th trigger event
`1010` = Trigger output for every 11th trigger event
`1001` = Trigger output for every 10th trigger event
`1000` = Trigger output for every 9th trigger event
`0111` = Trigger output for every 8th trigger event
`0110` = Trigger output for every 7th trigger event
`0101` = Trigger output for every 6th trigger event
`0100` = Trigger output for every 5th trigger event
`0011` = Trigger output for every 4th trigger event
`0010` = Trigger output for every 3rd trigger event
`0001` = Trigger output for every 2nd trigger event
`0000` = Trigger output for every trigger event

bit 11-8 **Unimplemented:** Read as ‘`0`’

bit 7 **DTM:** Dual Trigger Mode bit(1)

`1` = Secondary trigger event is combined with the primary trigger event to create a PWM trigger
`0` = Secondary trigger event is not combined with the primary trigger event to create a PWM trigger; two separate PWM triggers are generated

bit 6 **Unimplemented:** Read as ‘`0`’

bit 5-0 **TRGSTRT<5:0>:** Trigger Postscaler Start Enable Select bits

`111111` = Wait 63 PWM cycles before generating the first trigger event after the module is enabled
•
•
•
`000010` = Wait 2 PWM cycles before generating the first trigger event after the module is enabled
`000001` = Wait 1 PWM cycle before generating the first trigger event after the module is enabled
`000000` = Wait 0 PWM cycles before generating the first trigger event after the module is enabled

Note 1: The secondary PWMx generator cannot generate PWM trigger interrupts.

© 2013-2015 Microchip Technology Inc.

REGISTER 15-20: IOCONx: PWMx I/O CONTROL REGISTER (x = 1 to 5)

R/W-1	R/W-1	R/W-0	R/W-0	R/W-0	R/W-0	R/W-0	R/W-0
PENH	PENL	POLH	POLL	PMOD1(1)	PMOD0(1)	OVRENH	OVRENL
bit 15							bit 8

R/W-0	R/W-0	R/W-0	R/W-0	R/W-0	R/W-0	R/W-0	R/W-0
OVRDAT1	OVRDAT0	FLTDAT1(2)	FLTDAT0(2)	CLDAT1(2)	CLDAT0(2)	SWAP	OSYNC
bit 7							bit 0

Legend:			
R = Readable bit	W = Writable bit	U = Unimplemented bit, read as ‘0’	
-n = Value at POR	‘1’ = Bit is set	‘0’ = Bit is cleared	x = Bit is unknown

bit 15 **PENH:** PWMxH Output Pin Ownership bit
1 = PWMx module controls the PWMxH pin
0 = GPIO module controls the PWMxH pin

bit 14 **PENL:** PWMxL Output Pin Ownership bit
1 = PWMx module controls the PWMxL pin
0 = GPIO module controls the PWMxL pin

bit 13 **POLH:** PWMxH Output Pin Polarity bit
1 = PWMxH pin is active-low
0 = PWMxH pin is active-high

bit 12 **POLL:** PWMxL Output Pin Polarity bit
1 = PWMxL pin is active-low
0 = PWMxL pin is active-high

bit 11-10 **PMOD<1:0>:** PWMx # I/O Pin Mode bits(1)
11 = PWMx I/O pin pair is in the True Independent Output mode
10 = PWMx I/O pin pair is in the Push-Pull Output mode
01 = PWMx I/O pin pair is in the Redundant Output mode
00 = PWMx I/O pin pair is in the Complementary Output mode

bit 9 **OVRENH:** Override Enable for PWMxH Pin bit
1 = OVRDAT1 provides data for output on the PWMxH pin
0 = PWMx generator provides data for the PWMxH pin

bit 8 **OVRENL:** Override Enable for PWMxL Pin bit
1 = OVRDAT0 provides data for output on the PWMxL pin
0 = PWMx generator provides data for the PWMxL pin

bit 7-6 **OVRDAT<1:0>:** Data for PWMxH, PWMxL Pins if Override is Enabled bits
If OVERENH = 1, OVRDAT1 provides data for the PWMxH pin
If OVERENL = 1, OVRDAT0 provides data for the PWMxL pin

bit 5-4 **FLTDAT<1:0>:** State for PWMxH and PWMxL Pins if FLTMOD<1:0> are Enabled bits(2)
IFLTMOD (FCLCONx<15>) = 0: Normal Fault Mode:
If Fault is active, then FLTDAT1 provides the state for the PWMxH pin.
If Fault is active, then FLTDAT0 provides the state for the PWMxL pin.
IFLTMOD (FCLCONx<15>) = 1: Independent Fault Mode:
If current limit is active, then FLTDAT1 provides the state for the PWMxH pin.
If Fault is active, then FLTDAT0 provides the state for the PWMxL pin.

Note 1: These bits should not be changed after the PWMx module is enabled (PTEN = 1).
2: State represents the active/inactive state of the PWMx depending on the POLH and POLL bits settings.

REGISTER 15-20: IOCONx: PWMx I/O CONTROL REGISTER (x = 1 to 5) (CONTINUED)

bit 3-2 **CLDAT<1:0>:** State for PWMxH and PWMxL Pins if CLMOD is Enabled bits(2)

IFLTMOD (FCLCONx<15>) = 0: Normal Fault Mode:
If current limit is active, then CLDAT1 provides the state for the PWMxH pin.
If current limit is active, then CLDAT0 provides the state for the PWMxL pin.

IFLTMOD (FCLCONx<15>) = 1: Independent Fault Mode:
CLDAT<1:0> bits are ignored.

bit 1 **SWAP:** SWAP PWMxH and PWMxL Pins bit

1 = PWMxH output signal is connected to the PWMxL pins; PWMxL output signal is connected to the PWMxH pins
0 = PWMxH and PWMxL pins are mapped to their respective pins

bit 0 **OSYNC:** Output Override Synchronization bit

1 = Output overrides via the OVRDAT<1:0> bits are synchronized to the PWMx time base
0 = Output overrides via the OVDDAT<1:0> bits occur on the next CPU clock boundary

Note 1: These bits should not be changed after the PWMx module is enabled (PTEN = 1).
2: State represents the active/inactive state of the PWMx depending on the POLH and POLL bits settings.

REGISTER 15-21: TRIGx: PWMx PRIMARY TRIGGER COMPARE VALUE REGISTER (x = 1 to 5)

R/W-0	R/W-0	R/W-0	R/W-0	R/W-0	R/W-0	R/W-0	R/W-0
TRGCMP<12:5>							
bit 15							bit 8

R/W-0	R/W-0	R/W-0	R/W-0	R/W-0	U-0	U-0	U-0
TRGCMP<4:0>					—	—	—
bit 7							bit 0

Legend:			
R = Readable bit	W = Writable bit	U = Unimplemented bit, read as ‘0’	
-n = Value at POR	‘1’ = Bit is set	‘0’ = Bit is cleared	x = Bit is unknown

bit 15-3 **TRGCMP<12:0>:** Trigger Compare Value bits

When the primary PWMx functions in the local time base, this register contains the compare values that can trigger the ADC module.

bit 2-0 **Unimplemented:** Read as ‘0’

© 2013-2015 Microchip Technology Inc.

REGISTER 15-22: FCLCONx: PWMx FAULT CURRENT-LIMIT CONTROL REGISTER (x = 1 to 5)

R/W-0	R/W-0	R/W-0	R/W-0	R/W-0	R/W-0	R/W-0	R/W-0
IFLTMOD	CLSRC4	CLSRC3	CLSRC2	CLSRC1	CLSRC0	CLPOL(1)	CLMOD
bit 15							bit 8

R/W-0	R/W-0	R/W-0	R/W-0	R/W-0	R/W-0	R/W-0	R/W-0
FLTSRC4	FLTSRC3	FLTSRC2	FLTSRC1	FLTSRC0	FLTPOL(1)	FLTMOD1	FLTMOD0
bit 7							bit 0

Legend:			
R = Readable bit	W = Writable bit	U = Unimplemented bit, read as ‘0’	
-n = Value at POR	‘1’ = Bit is set	‘0’ = Bit is cleared	x = Bit is unknown

bit 15 **IFLTMOD:** Independent Fault Mode Enable bit
1 = Independent Fault mode: Current-limit input maps FLTDAT1 to the PWMxH output and the Fault input maps FLTDAT0 to the PWMxL output; the CLDAT<1:0> bits are not used for override functions
0 = Normal Fault mode: Current-Limit mode maps CLDAT<1:0> bits to the PWMxH and PWMxL outputs; the PWM Fault mode maps FLTDAT<1:0> to the PWMxH and PWMxL outputs

bit 14-10 **CLSRC<4:0>:** Current-Limit Control Signal Source Select for PWMx Generator # bits
11111 = Reserved
10001 = Reserved
10000 = Analog Comparator 4
01111 = Analog Comparator 3
01110 = Analog Comparator 2
01101 = Analog Comparator 1
01100 = Fault 12
01011 = Fault 11
01010 = Fault 10
01001 = Fault 9
01000 = Fault 8
00111 = Fault 7
00110 = Fault 6
00101 = Fault 5
00100 = Fault 4
00011 = Fault 3
00010 = Fault 2
00001 = Fault 1
00000 = Reserved

bit 9 **CLPOL:** Current-Limit Polarity for PWMx Generator # bit(1)
1 = The selected current-limit source is active-low
0 = The selected current-limit source is active-high

bit 8 **CLMOD:** Current-Limit Mode Enable for PWMx Generator # bit
1 = Current-Limit mode is enabled
0 = Current-Limit mode is disabled

Note 1: These bits should be changed only when PTEN = 0 (PTCON<15>).

REGISTER 15-22: FCLCONx: PWMx FAULT CURRENT-LIMIT CONTROL REGISTER (x = 1 to 5) (CONTINUED)

bit 7-3 **FLTSRC<4:0>:** Fault Control Signal Source Select for PWMx Generator # bits
- 11111 = Reserved
- 10001 = Reserved
- 10000 = Analog Comparator 4
- 01111 = Analog Comparator 3
- 01110 = Analog Comparator 2
- 01101 = Analog Comparator 1
- 01100 = Fault 12
- 01011 = Fault 11
- 01010 = Fault 10
- 01001 = Fault 9
- 01000 = Fault 8
- 00111 = Fault 7
- 00110 = Fault 6
- 00101 = Fault 5
- 00100 = Fault 4
- 00011 = Fault 3
- 00010 = Fault 2
- 00001 = Fault 1
- 00000 = Reserved

bit 2 **FLTPOL:** Fault Polarity for PWMx Generator # bit[1]
- 1 = The selected Fault source is active-low
- 0 = The selected Fault source is active-high

bit 1-0 **FLTMOD<1:0>:** Fault Mode for PWMx Generator # bits
- 11 = Fault input is disabled
- 10 = Reserved
- 01 = The selected Fault source forces the PWMxH, PWMxL pins to FLTDATx values (cycle)
- 00 = The selected Fault source forces the PWMxH, PWMxL pins to FLTDATx values (latched condition)

Note 1: These bits should be changed only when PTEN = 0 (PTCON<15>).

REGISTER 15-23: STRIGx: PWMx SECONDARY TRIGGER COMPARE VALUE REGISTER (x = 1 to 5)[1]

R/W-0	R/W-0	R/W-0	R/W-0	R/W-0	R/W-0	R/W-0	R/W-0
STRGCMP<12:5>							
bit 15							bit 8

R/W-0	R/W-0	R/W-0	R/W-0	R/W-0	U-0	U-0	U-0
STRGCMP<4:0>					—	—	—
bit 7							bit 0

Legend:			
R = Readable bit	W = Writable bit	U = Unimplemented bit, read as ‘0’	
-n = Value at POR	‘1’ = Bit is set	‘0’ = Bit is cleared	x = Bit is unknown

bit 15-3 **STRGCMP<12:0>:** Secondary Trigger Compare Value bits
When the secondary PWMx functions in the local time base, this register contains the compare values that can trigger the ADC module.

bit 2-0 **Unimplemented:** Read as ‘0’

Note 1: STRIGx cannot generate the PWM trigger interrupts.

© 2013-2015 Microchip Technology Inc.

REGISTER 15-24: LEBCONx: PWMx LEADING-EDGE BLANKING (LEB) CONTROL REGISTER (x = 1 to 5)

R/W-0	R/W-0	R/W-0	R/W-0	R/W-0	R/W-0	U-0	U-0
PHR	PHF	PLR	PLF	FLTLEBEN	CLLEBEN	—	—
bit 15							bit 8

U-0	U-0	R/W-0	R/W-0	R/W-0	R/W-0	R/W-0	R/W-0
—	—	BCH(1)	BCL(1)	BPHH	BPHL	BPLH	BPLL
bit 7							bit 0

Legend:			
R = Readable bit	W = Writable bit	U = Unimplemented bit, read as ‘0’	
-n = Value at POR	‘1’ = Bit is set	‘0’ = Bit is cleared	x = Bit is unknown

bit 15 **PHR:** PWMxH Rising Edge Trigger Enable bit
1 = Rising edge of PWMxH will trigger the Leading-Edge Blanking counter
0 = Leading-Edge Blanking ignores the rising edge of PWMxH

bit 14 **PHF:** PWMxH Falling Edge Trigger Enable bit
1 = Falling edge of PWMxH will trigger the Leading-Edge Blanking counter
0 = Leading-Edge Blanking ignores the falling edge of PWMxH

bit 13 **PLR:** PWMxL Rising Edge Trigger Enable bit
1 = Rising edge of PWMxL will trigger the Leading-Edge Blanking counter
0 = Leading-Edge Blanking ignores the rising edge of PWMxL

bit 12 **PLF:** PWMxL Falling Edge Trigger Enable bit
1 = Falling edge of PWMxL will trigger the Leading-Edge Blanking counter
0 = Leading-Edge Blanking ignores the falling edge of PWMxL

bit 11 **FLTLEBEN:** Fault Input Leading-Edge Blanking Enable bit
1 = Leading-Edge Blanking is applied to the selected Fault input
0 = Leading-Edge Blanking is not applied to the selected Fault input

bit 10 **CLLEBEN:** Current-Limit Leading-Edge Blanking Enable bit
1 = Leading-Edge Blanking is applied to the selected current-limit input
0 = Leading-Edge Blanking is not applied to the selected current-limit input

bit 9-6 **Unimplemented:** Read as ‘0’

bit 5 **BCH:** Blanking in Selected Blanking Signal High Enable bit(1)
1 = State blanking (of current-limit and/or Fault input signals) when the selected blanking signal is high
0 = No blanking when the selected blanking signal is high

bit 4 **BCL:** Blanking in Selected Blanking Signal Low Enable bit(1)
1 = State blanking (of current-limit and/or Fault input signals) when the selected blanking signal is low
0 = No blanking when the selected blanking signal is low

bit 3 **BPHH:** Blanking in PWMxH High Enable bit
1 = State blanking (of current-limit and/or Fault input signals) when the PWMxH output is high
0 = No blanking when the PWMxH output is high

bit 2 **BPHL:** Blanking in PWMxH Low Enable bit
1 = State blanking (of current-limit and/or Fault input signals) when the PWMxH output is low
0 = No blanking when the PWMxH output is low

Note 1: The blanking signal is selected via the BLANKSEL<3:0> bits in the AUXCONx register.

REGISTER 15-24: LEBCONx: PWMx LEADING-EDGE BLANKING (LEB) CONTROL REGISTER (x = 1 to 5) (CONTINUED)

bit 1 **BPLH:** Blanking in PWMxL High Enable bit
1 = State blanking (of current-limit and/or Fault input signals) when the PWMxL output is high
0 = No blanking when the PWMxL output is high

bit 0 **BPLL:** Blanking in PWMxL Low Enable bit
1 = State blanking (of current-limit and/or Fault input signals) when the PWMxL output is low
0 = No blanking when the PWMxL output is low

Note 1: The blanking signal is selected via the BLANKSEL<3:0> bits in the AUXCONx register.

REGISTER 15-25: LEBDLYx: PWMx LEADING-EDGE BLANKING DELAY REGISTER (x = 1 to 5)

U-0	U-0	U-0	U-0	R/W-0	R/W-0	R/W-0	R/W-0
—	—	—	—	LEB<8:5>			
bit 15							bit 8

R/W-0	R/W-0	R/W-0	R/W-0	R/W-0	U-0	U-0	U-0
LEB<4:0>					—	—	—
bit 7							bit 0

Legend:			
R = Readable bit	W = Writable bit	U = Unimplemented bit, read as ‘0’	
-n = Value at POR	‘1’ = Bit is set	‘0’ = Bit is cleared	x = Bit is unknown

bit 15-12 **Unimplemented:** Read as ‘0’

bit 11-3 **LEB<8:0>:** Leading-Edge Blanking Delay for Current-Limit and Fault Inputs bits
The value is in 8.32 ns increments.

bit 2-0 **Unimplemented:** Read as ‘0’

© 2013-2015 Microchip Technology Inc.

REGISTER 15-26: AUXCONx: PWMx AUXILIARY CONTROL REGISTER (x = 1 to 5)

R/W-0	R/W-0	U-0	U-0	R/W-0	R/W-0	R/W-0	R/W-0
HRPDIS	HRDDIS	—	—	BLANKSEL3	BLANKSEL2	BLANKSEL1	BLANKSEL0
bit 15							bit 8

U-0	U-0	R/W-0	R/W-0	R/W-0	R/W-0	R/W-0	R/W-0
—	—	CHOPSEL3	CHOPSEL2	CHOPSEL1	CHOPSEL0	CHOPHEN	CHOPLEN
bit 7							bit 0

Legend:			
R = Readable bit	W = Writable bit	U = Unimplemented bit, read as ‘0’	
-n = Value at POR	‘1’ = Bit is set	‘0’ = Bit is cleared	x = Bit is unknown

bit 15 **HRPDIS:** High-Resolution PWMx Period Disable bit
1 = High-resolution PWMx period is disabled to reduce power consumption
0 = High-resolution PWMx period is enabled

bit 14 **HRDDIS:** High-Resolution PWMx Duty Cycle Disable bit
1 = High-resolution PWMx duty cycle is disabled to reduce power consumption
0 = High-resolution PWMx duty cycle is enabled

bit 13-12 **Unimplemented:** Read as ‘0’

bit 11-8 **BLANKSEL<3:0>:** PWMx State Blank Source Select bits
The selected state blank signal will block the current-limit and/or Fault input signals (if enabled via the BCH and BCL bits in the LEBCONx register).
1001 = Reserved
1000 = Reserved
0111 = Reserved
0110 = Reserved
0101 = PWM5H is selected as the state blank source
0100 = PWM4H is selected as the state blank source
0011 = PWM3H is selected as the state blank source
0010 = PWM2H is selected as the state blank source
0001 = PWM1H is selected as the state blank source
0000 = No state blanking

bit 7-6 **Unimplemented:** Read as ‘0’

bit 5-2 **CHOPSEL<3:0>:** PWMx Chop Clock Source Select bits
The selected signal will enable and disable (chop) the selected PWMx outputs.
1001 = Reserved
1000 = Reserved
0111 = Reserved
0110 = Reserved
0101 = PWM5H is selected as the chop clock source
0100 = PWM4H is selected as the chop clock source
0011 = PWM3H is selected as the chop clock source
0010 = PWM2H is selected as the chop clock source
0001 = PWM1H is selected as the chop clock source
0000 = Chop clock generator is selected as the chop clock source

bit 1 **CHOPHEN:** PWMxH Output Chopping Enable bit
1 = PWMxH chopping function is enabled
0 = PWMxH chopping function is disabled

bit 0 **CHOPLEN:** PWMxL Output Chopping Enable bit
1 = PWMxL chopping function is enabled
0 = PWMxL chopping function is disabled

REGISTER 15-27: PWMCAPx: PWMx PRIMARY TIME BASE CAPTURE REGISTER (x = 1 to 5)

R-0	R-0	R-0	R-0	R-0	R-0	R-0	R-0
PWMCAP<12:5>(1,2,3,4)							
bit 15							bit 8

R-0	R-0	R-0	R-0	R-0	U-0	U-0	U-0
PWMCAP<4:0>(1,2,3,4)					—	—	—
bit 7							bit 0

Legend:			
R = Readable bit	W = Writable bit	U = Unimplemented bit, read as ‘0’	
-n = Value at POR	‘1’ = Bit is set	‘0’ = Bit is cleared	x = Bit is unknown

bit 15-3 **PWMCAP<12:0>:** PWMx Primary Time Base Capture Value bits(1,2,3,4)
The value in this register represents the captured PWMx time base value when a leading edge is detected on the current-limit input.

bit 2-0 **Unimplemented:** Read as ‘0’

Note 1: The capture feature is only available on a primary output (PWMxH).
2: This feature is active only after LEB processing on the current-limit input signal is complete.
3: The minimum capture resolution is 8.32 ns.
4: This feature can be used when the XPRES bit (PWMCONx<1>) is set to ‘0’.

© 2013-2015 Microchip Technology Inc.

16.0 SERIAL PERIPHERAL INTERFACE (SPI)

Note 1: This data sheet summarizes the features of the dsPIC33EPXXGS50X family of devices. It is not intended to be a comprehensive reference source. To complement the information in this data sheet, refer to **"Serial Peripheral Interface (SPI)"** (DS70005185) in the "*dsPIC33/PIC24 Family Reference Manual*", which is available from the Microchip web site (www.microchip.com).

2: Some registers and associated bits described in this section may not be available on all devices. Refer to **Section 4.0 "Memory Organization"** in this data sheet for device-specific register and bit information.

The SPI module is a synchronous serial interface, useful for communicating with other peripherals or microcontroller devices. These peripheral devices can be serial EEPROMs, shift registers, display drivers, ADC Converters, etc. The SPI module is compatible with Motorola® SPI and SIOP interfaces.

The dsPIC33EPXXGS50X device family offers two SPI modules on a single device. These modules, which are designated as SPI1 and SPI2, are functionally identical.

Note: In this section, the SPI modules are referred to together as SPIx, or separately as SPI1 and SPI2. Special Function Registers follow a similar notation. For example, SPIxCON refers to the control register for the SPI1 and SPI2 modules.

The SPIx module takes advantage of the Peripheral Pin Select (PPS) feature to allow for greater flexibility in pin configuration.

The SPIx serial interface consists of four pins, as follows:

- SDIx: Serial Data Input
- SDOx: Serial Data Output
- SCKx: Shift Clock Input or Output
- $\overline{\text{SSx}}$/FSYNCx: Active-Low Slave Select or Frame Synchronization I/O Pulse

The SPIx module can be configured to operate with two, three or four pins. In 3-Pin mode, $\overline{\text{SSx}}$ is not used. In 2-Pin mode, neither SDOx nor $\overline{\text{SSx}}$ is used.

Figure 16-1 illustrates the block diagram of the SPIx module in Standard and Enhanced modes.

FIGURE 16-1: SPIx MODULE BLOCK DIAGRAM

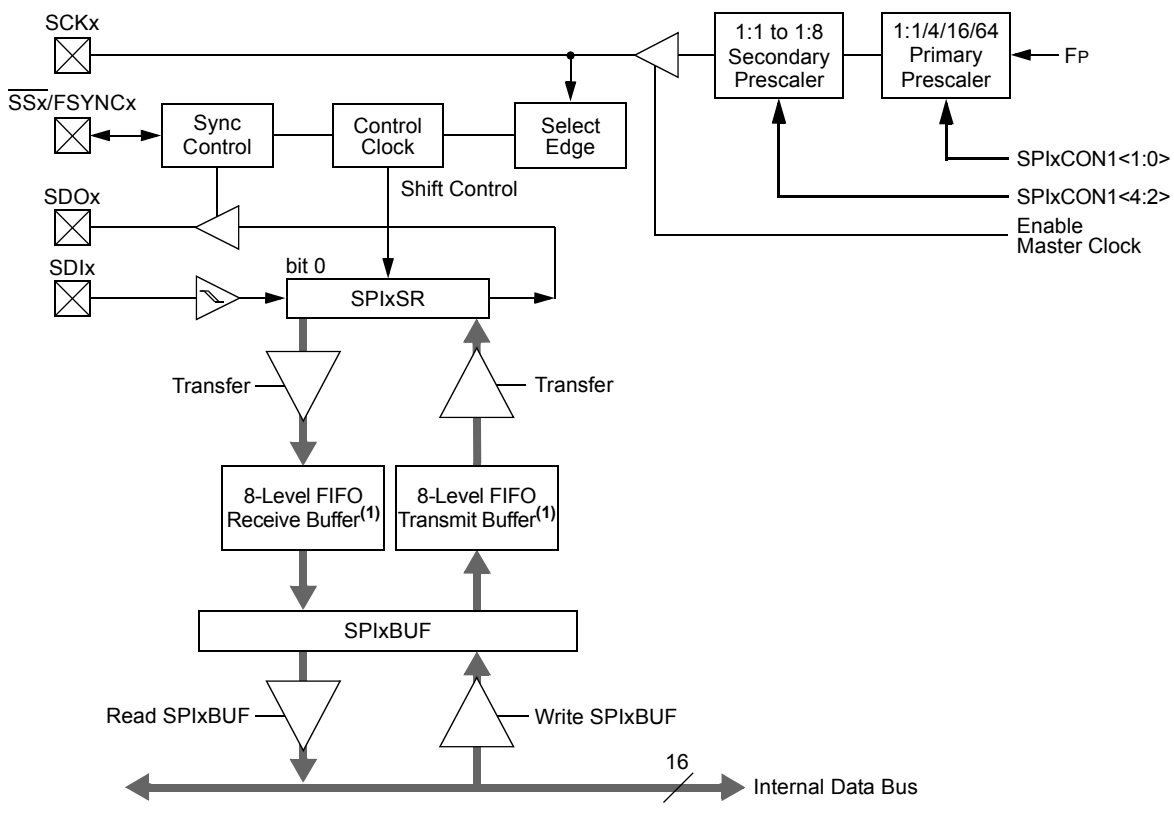

Note 1: In Standard mode, the FIFO is only one-level deep.

16.1 SPI Helpful Tips

1. In Frame mode, if there is a possibility that the master may not be initialized before the slave:
   a) If FRMPOL (SPIxCON2<13>) = 1, use a pull-down resistor on $\overline{SSx}$.
   b) If FRMPOL = 0, use a pull-up resistor on $\overline{SSx}$.

Note:	This ensures that the first frame transmission after initialization is not shifted or corrupted.

2. In Non-Framed 3-Wire mode (i.e., not using $\overline{SSx}$ from a master):
   a) If CKP (SPIxCON1<6>) = 1, always place a pull-up resistor on $\overline{SSx}$.
   b) If CKP = 0, always place a pull-down resistor on $\overline{SSx}$.

Note:	This will ensure that during power-up and initialization, the master/slave will not lose synchronization due to an errant SCKx transition that would cause the slave to accumulate data shift errors for both transmit and receive, appearing as corrupted data.

3. FRMEN (SPIxCON2<15>) = 1 and SSEN (SPIxCON1<7>) = 1 are exclusive and invalid. In Frame mode, SCKx is continuous and the frame sync pulse is active on the $\overline{SSx}$ pin, which indicates the start of a data frame.

Note:	Not all third-party devices support Frame mode timing. Refer to the SPIx specifications in **Section 26.0 "Electrical Characteristics"** for details.

4. In Master mode only, set the SMP bit (SPIxCON1<9>) to a '1' for the fastest SPIx data rate possible. The SMP bit can only be set at the same time or after the MSTEN bit (SPIxCON1<5>) is set.

To avoid invalid slave read data to the master, the user's master software must ensure enough time for slave software to fill its write buffer before the user application initiates a master write/read cycle. It is always advisable to preload the SPIxBUF Transmit register in advance of the next master transaction cycle. SPIxBUF is transferred to the SPIx Shift register and is empty once the data transmission begins.

16.2 SPI Resources

Many useful resources are provided on the main product page of the Microchip web site for the devices listed in this data sheet. This product page contains the latest updates and additional information.

16.2.1 KEY RESOURCES

- **"Serial Peripheral Interface (SPI)"** (DS70005185) in the *"dsPIC33/PIC24 Family Reference Manual"*
- Code Samples
- Application Notes
- Software Libraries
- Webinars
- All Related *"dsPIC33/PIC24 Family Reference Manual"* Sections
- Development Tools

© 2013-2015 Microchip Technology Inc.

16.3 SPI Control Registers

REGISTER 16-1: SPIxSTAT: SPIx STATUS AND CONTROL REGISTER

R/W-0	U-0	R/W-0	U-0	U-0	R/W-0	R/W-0	R/W-0
SPIEN	—	SPISIDL	—	—	SPIBEC2	SPIBEC1	SPIBEC0
bit 15							bit 8

R/W-0	R/C-0, HS	R/W-0	R/W-0	R/W-0	R/W-0	R-0, HS, HC	R-0, HS, HC
SRMPT	SPIROV	SRXMPT	SISEL2	SISEL1	SISEL0	SPITBF	SPIRBF
bit 7							bit 0

Legend:	C = Clearable bit	U = Unimplemented bit, read as ‘0’	
R = Readable bit	W = Writable bit	HS = Hardware Settable bit	HC = Hardware Clearable bit
-n = Value at POR	‘1’ = Bit is set	‘0’ = Bit is cleared	x = Bit is unknown

bit 15 **SPIEN:** SPIx Enable bit
1 = Enables the module and configures SCKx, SDOx, SDIx and $\overline{SSx}$ as serial port pins
0 = Disables the module

bit 14 **Unimplemented:** Read as ‘0’

bit 13 **SPISIDL:** SPIx Stop in Idle Mode bit
1 = Discontinues the module operation when device enters Idle mode
0 = Continues the module operation in Idle mode

bit 12-11 **Unimplemented:** Read as ‘0’

bit 10-8 **SPIBEC<2:0>:** SPIx Buffer Element Count bits (valid in Enhanced Buffer mode)
Master Mode:
Number of SPIx transfers that are pending.
Slave Mode:
Number of SPIx transfers that are unread.

bit 7 **SRMPT:** SPIx Shift Register (SPIxSR) Empty bit (valid in Enhanced Buffer mode)
1 = SPIx Shift register is empty and ready to send or receive the data
0 = SPIx Shift register is not empty

bit 6 **SPIROV:** SPIx Receive Overflow Flag bit
1 = A new byte/word is completely received and discarded; the user application has not read the previous data in the SPIxBUF register
0 = No overflow has occurred

bit 5 **SRXMPT:** SPIx Receive FIFO Empty bit (valid in Enhanced Buffer mode)
1 = RX FIFO is empty
0 = RX FIFO is not empty

bit 4-2 **SISEL<2:0>:** SPIx Buffer Interrupt Mode bits (valid in Enhanced Buffer mode)
111 = Interrupt when the SPIx transmit buffer is full (SPITBF bit is set)
110 = Interrupt when the last bit is shifted into SPIxSR, and as a result, the TX FIFO is empty
101 = Interrupt when the last bit is shifted out of SPIxSR and the transmit is complete
100 = Interrupt when one data is shifted into the SPIxSR, and as a result, the TX FIFO has one open memory location
011 = Interrupt when the SPIx receive buffer is full (SPIRBF bit is set)
010 = Interrupt when the SPIx receive buffer is 3/4 or more full
001 = Interrupt when data is available in the receive buffer (SRMPT bit is set)
000 = Interrupt when the last data in the receive buffer is read, and as a result, the buffer is empty (SRXMPT bit is set)

REGISTER 16-1: SPIxSTAT: SPIx STATUS AND CONTROL REGISTER (CONTINUED)

bit 1 **SPITBF:** SPIx Transmit Buffer Full Status bit

1 = Transmit has not yet started, SPIxTXB is full
0 = Transmit has started, SPIxTXB is empty

Standard Buffer Mode:
Automatically set in hardware when the core writes to the SPIxBUF location, loading SPIxTXB. Automatically cleared in hardware when the SPIx module transfers data from SPIxTXB to SPIxSR.

Enhanced Buffer Mode:
Automatically set in hardware when the CPU writes to the SPIxBUF location, loading the last available buffer location. Automatically cleared in hardware when a buffer location is available for a CPU write operation.

bit 0 **SPIRBF:** SPIx Receive Buffer Full Status bit

1 = Receive is complete, SPIxRXB is full
0 = Receive is incomplete, SPIxRXB is empty

Standard Buffer Mode:
Automatically set in hardware when SPIx transfers data from SPIxSR to SPIxRXB. Automatically cleared in hardware when the core reads the SPIxBUF location, reading SPIxRXB.

Enhanced Buffer Mode:
Automatically set in hardware when SPIx transfers data from SPIxSR to the buffer, filling the last unread buffer location. Automatically cleared in hardware when a buffer location is available for a transfer from SPIxSR.

© 2013-2015 Microchip Technology Inc.

REGISTER 16-2: SPIxCON1: SPIx CONTROL REGISTER 1

U-0	U-0	U-0	R/W-0	R/W-0	R/W-0	R/W-0	R/W-0
—	—	—	DISSCK	DISSDO	MODE16	SMP	CKE(1)
bit 15							bit 8

R/W-0	R/W-0	R/W-0	R/W-0	R/W-0	R/W-0	R/W-0	R/W-0
SSEN(2)	CKP	MSTEN	SPRE2(3)	SPRE1(3)	SPRE0(3)	PPRE1(3)	PPRE0(3)
bit 7							bit 0

Legend:			
R = Readable bit	W = Writable bit	U = Unimplemented bit, read as ‘0’	
-n = Value at POR	‘1’ = Bit is set	‘0’ = Bit is cleared	x = Bit is unknown

bit 15-13 **Unimplemented:** Read as ‘0’

bit 12 **DISSCK:** Disable SCKx Pin bit (SPIx Master modes only)
1 = Internal SPIx clock is disabled, pin functions as I/O
0 = Internal SPIx clock is enabled

bit 11 **DISSDO:** Disable SDOx Pin bit
1 = SDOx pin is not used by the module; pin functions as I/O
0 = SDOx pin is controlled by the module

bit 10 **MODE16:** Word/Byte Communication Select bit
1 = Communication is word-wide (16 bits)
0 = Communication is byte-wide (8 bits)

bit 9 **SMP:** SPIx Data Input Sample Phase bit
Master Mode:
1 = Input data is sampled at the end of data output time
0 = Input data is sampled at the middle of data output time
Slave Mode:
SMP must be cleared when SPIx is used in Slave mode.

bit 8 **CKE:** SPIx Clock Edge Select bit(1)
1 = Serial output data changes on transition from active clock state to Idle clock state (refer to bit 6)
0 = Serial output data changes on transition from Idle clock state to active clock state (refer to bit 6)

bit 7 **SSEN:** Slave Select Enable bit (Slave mode)(2)
1 = $\overline{SSx}$ pin is used for Slave mode
0 = $\overline{SSx}$ pin is not used by the module; pin is controlled by port function

bit 6 **CKP:** Clock Polarity Select bit
1 = Idle state for clock is a high level; active state is a low level
0 = Idle state for clock is a low level; active state is a high level

bit 5 **MSTEN:** Master Mode Enable bit
1 = Master mode
0 = Slave mode

Note 1: The CKE bit is not used in Framed SPI modes. Program this bit to ‘0’ for Framed SPI modes (FRMEN = 1).
2: This bit must be cleared when FRMEN = 1.
3: Do not set both primary and secondary prescalers to the value of 1:1.

REGISTER 16-2: SPIxCON1: SPIx CONTROL REGISTER 1 (CONTINUED)

bit 4-2 **SPRE<2:0>:** Secondary Prescale bits (Master mode)[3]

111 = Secondary prescale 1:1
110 = Secondary prescale 2:1
•
•
•
000 = Secondary prescale 8:1

bit 1-0 **PPRE<1:0>:** Primary Prescale bits (Master mode)[3]

11 = Primary prescale 1:1
10 = Primary prescale 4:1
01 = Primary prescale 16:1
00 = Primary prescale 64:1

Note 1: The CKE bit is not used in Framed SPI modes. Program this bit to '0' for Framed SPI modes (FRMEN = 1).

2: This bit must be cleared when FRMEN = 1.

3: Do not set both primary and secondary prescalers to the value of 1:1.

© 2013-2015 Microchip Technology Inc.

REGISTER 16-3: SPIxCON2: SPIx CONTROL REGISTER 2

R/W-0	R/W-0	R/W-0	U-0	U-0	U-0	U-0	U-0
FRMEN	SPIFSD	FRMPOL	—	—	—	—	—
bit 15							bit 8

U-0	U-0	U-0	U-0	U-0	U-0	R/W-0	R/W-0
—	—	—	—	—	—	FRMDLY	SPIBEN
bit 7							bit 0

Legend:			
R = Readable bit	W = Writable bit	U = Unimplemented bit, read as ‘0’	
-n = Value at POR	‘1’ = Bit is set	‘0’ = Bit is cleared	x = Bit is unknown

bit 15 **FRMEN:** Framed SPIx Support bit
1 = Framed SPIx support is enabled ($\overline{SSx}$ pin is used as the frame sync pulse input/output)
0 = Framed SPIx support is disabled

bit 14 **SPIFSD:** Frame Sync Pulse Direction Control bit
1 = Frame sync pulse input (slave)
0 = Frame sync pulse output (master)

bit 13 **FRMPOL:** Frame Sync Pulse Polarity bit
1 = Frame sync pulse is active-high
0 = Frame sync pulse is active-low

bit 12-2 **Unimplemented:** Read as ‘0’

bit 1 **FRMDLY:** Frame Sync Pulse Edge Select bit
1 = Frame sync pulse coincides with the first bit clock
0 = Frame sync pulse precedes the first bit clock

bit 0 **SPIBEN:** Enhanced Buffer Enable bit
1 = Enhanced buffer is enabled
0 = Enhanced buffer is disabled (Standard mode)

NOTES:

© 2013-2015 Microchip Technology Inc.

17.0 INTER-INTEGRATED CIRCUIT™ (I^2C™)

Note 1: This data sheet summarizes the features of the dsPIC33EPXXGS50X family of devices. It is not intended to be a comprehensive reference source. To complement the information in this data sheet, refer to **"Inter-Integrated Circuit™ (I^2C™)"** (DS70000195) in the *"dsPIC33/PIC24 Family Reference Manual"*, which is available from the Microchip web site (www.microchip.com).

2: Some registers and associated bits described in this section may not be available on all devices. Refer to **Section 4.0 "Memory Organization"** in this data sheet for device-specific register and bit information.

The dsPIC33EPXXGS50X family of devices contains two Inter-Integrated Circuit™ (I^2C™) modules: I2C1 and I2C2.

The I^2C module provides complete hardware support for both Slave and Multi-Master modes of the I^2C serial communication standard, with a 16-bit interface.

The I^2C module has a 2-pin interface:

- The SCLx/ASCLx pin is clock
- The SDAx/ASDAx pin is data

The I^2C module offers the following key features:

- I^2C interface supporting both Master and Slave modes of operation
- I^2C Slave mode supports 7 and 10-bit addressing
- I^2C Master mode supports 7 and 10-bit addressing
- I^2C port allows bidirectional transfers between master and slaves
- Serial clock synchronization for I^2C port can be used as a handshake mechanism to suspend and resume serial transfer (SCLREL control)
- I^2C supports multi-master operation, detects bus collision and arbitrates accordingly
- System Management Bus (SMBus) support
- Alternate I^2C pin mapping (ASCLx/ASDAx)

17.1 I^2C Resources

Many useful resources are provided on the main product page of the Microchip web site for the devices listed in this data sheet. This product page contains the latest updates and additional information.

17.1.1 KEY RESOURCES

- Code Samples
- Application Notes
- Software Libraries
- Webinars
- All Related *"dsPIC33/PIC24 Family Reference Manual"* Sections
- Development Tools

FIGURE 17-1: I2Cx BLOCK DIAGRAM (x = 1 OR 2)

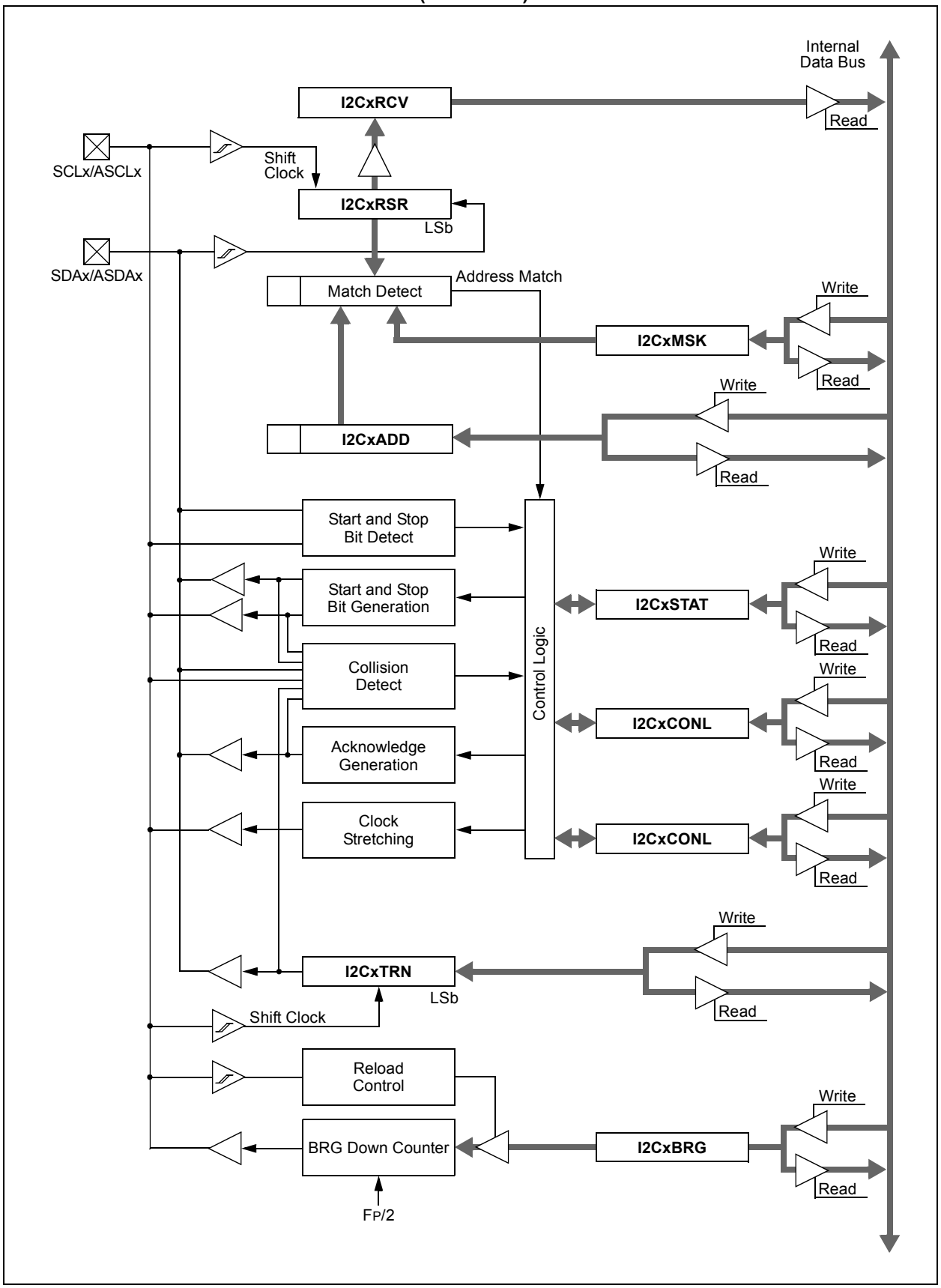

© 2013-2015 Microchip Technology Inc.

17.2 I²C Control Registers

REGISTER 17-1: I2CxCONL: I2Cx CONTROL REGISTER LOW

R/W-0	U-0	R/W-0	R/W-1, HC	R/W-0	R/W-0	R/W-0	R/W-0
I2CEN	—	I2CSIDL	SCLREL	STRICT	A10M	DISSLW	SMEN
bit 15							bit 8

R/W-0	R/W-0	R/W-0	R/W-0, HC	R/W-0, HC	R/W-0, HC	R/W-0, HC	R/W-0, HC
GCEN	STREN	ACKDT	ACKEN	RCEN	PEN	RSEN	SEN
bit 7							bit 0

Legend:	HC = Hardware Clearable bit		
R = Readable bit	W = Writable bit	U = Unimplemented bit, read as ‘0’	
-n = Value at POR	‘1’ = Bit is set	‘0’ = Bit is cleared	x = Bit is unknown

bit 15 **I2CEN:** I2Cx Enable bit
1 = Enables the I2Cx module and configures the SDAx and SCLx pins as serial port pins
0 = Disables the I2Cx module; all I²C™ pins are controlled by port functions

bit 14 **Unimplemented:** Read as ‘0’

bit 13 **I2CSIDL:** I2Cx Stop in Idle Mode bit
1 = Discontinues module operation when device enters Idle mode
0 = Continues module operation in Idle mode

bit 12 **SCLREL:** SCLx Release Control bit (when operating as I²C slave)
1 = Releases SCLx clock
0 = Holds SCLx clock low (clock stretch)
If STREN = 1:
Bit is R/W (i.e., software can write ‘0’ to initiate stretch and write ‘1’ to release clock). Hardware is clear at the beginning of every slave data byte transmission. Hardware is clear at the end of every slave address byte reception. Hardware is clear at the end of every slave data byte reception.
If STREN = 0:
Bit is R/S (i.e., software can only write ‘1’ to release clock). Hardware is clear at the beginning of every slave data byte transmission. Hardware is clear at the end of every slave address byte reception.

bit 11 **STRICT:** Strict I2Cx Reserved Address Enable bit
1 = Strict Reserved Addressing is Enabled:
In Slave mode, the device will NACK any reserved address. In Master mode, the device is allowed to generate addresses within the reserved address space.
0 = Reserved Addressing is Acknowledged:
In Slave mode, the device will ACK any reserved address. In Master mode, the device should not address a slave device with a reserved address.

bit 10 **A10M:** 10-Bit Slave Address bit
1 = I2CxADD is a 10-bit slave address
0 = I2CxADD is a 7-bit slave address

bit 9 **DISSLW:** Disable Slew Rate Control bit
1 = Slew rate control is disabled
0 = Slew rate control is enabled

bit 8 **SMEN:** SMBus Input Levels bit
1 = Enables I/O pin thresholds compliant with SMBus specification
0 = Disables SMBus input thresholds

bit 7 **GCEN:** General Call Enable bit (when operating as I²C slave)
1 = Enables interrupt when a general call address is received in I2CxRSR (module is enabled for reception)
0 = General call address is disabled

REGISTER 17-1: I2CxCONL: I2Cx CONTROL REGISTER LOW (CONTINUED)

bit 6 **STREN:** SCLx Clock Stretch Enable bit (when operating as I^2C slave)
Used in conjunction with the SCLREL bit.
1 = Enables software or receives clock stretching
0 = Disables software or receives clock stretching

bit 5 **ACKDT:** Acknowledge Data bit (when operating as I^2C master, applicable during master receive)
Value that is transmitted when the software initiates an Acknowledge sequence.
1 = Sends NACK during Acknowledge
0 = Sends ACK during Acknowledge

bit 4 **ACKEN:** Acknowledge Sequence Enable bit
(when operating as I^2C master, applicable during master receive)
1 = Initiates Acknowledge sequence on SDAx and SCLx pins and transmits ACKDT data bit; hardware is clear at the end of the master Acknowledge sequence
0 = Acknowledge sequence is not in progress

bit 3 **RCEN:** Receive Enable bit (when operating as I^2C master)
1 = Enables Receive mode for I^2C; hardware is clear at the end of the eighth bit of the master receive data byte
0 = Receive sequence is not in progress

bit 2 **PEN:** Stop Condition Enable bit (when operating as I^2C master)
1 = Initiates Stop condition on SDAx and SCLx pins; hardware is clear at the end of the master Stop sequence
0 = Stop condition is not in progress

bit 1 **RSEN:** Repeated Start Condition Enable bit (when operating as I^2C master)
1 = Initiates Repeated Start condition on SDAx and SCLx pins; hardware is clear at the end of the master Repeated Start sequence
0 = Repeated Start condition is not in progress

bit 0 **SEN:** Start Condition Enable bit (when operating as I^2C master)
1 = Initiates Start condition on SDAx and SCLx pins; hardware is clear at the end of the master Start sequence
0 = Start condition is not in progress

© 2013-2015 Microchip Technology Inc.

REGISTER 17-2: I2CxCONH: I2Cx CONTROL REGISTER HIGH

U-0	U-0	U-0	U-0	U-0	U-0	U-0	U-0
—	—	—	—	—	—	—	—
bit 15							bit 8

U-0	R/W-0	R/W-0	R/W-0	R/W-0	R/W-0	R/W-0	R/W-0
—	PCIE	SCIE	BOEN	SDAHT	SBCDE	AHEN	DHEN
bit 7							bit 0

Legend:			
R = Readable bit	W = Writable bit	U = Unimplemented bit, read as ‘0’	
-n = Value at POR	‘1’ = Bit is set	‘0’ = Bit is cleared	x = Bit is unknown

bit 15-7 **Unimplemented:** Read as ‘0’

bit 6 **PCIE:** Stop Condition Interrupt Enable bit (I^2C™ Slave mode only)
1 = Enables interrupt on detection of Stop condition
0 = Stop detection interrupts are disabled

bit 5 **SCIE:** Start Condition Interrupt Enable bit (I^2C Slave mode only)
1 = Enables interrupt on detection of Start or Restart conditions
0 = Start detection interrupts are disabled

bit 4 **BOEN:** Buffer Overwrite Enable bit (I^2C Slave mode only)
1 = I2CxRCV is updated and ACK is generated for a received address/data byte, ignoring the state of the I2COV only if the RBF bit = 0
0 = I2CxRCV is only updated when I2COV is clear

bit 3 **SDAHT:** SDAx Hold Time Selection bit
1 = Minimum of 300 ns hold time on SDAx after the falling edge of SCLx
0 = Minimum of 100 ns hold time on SDAx after the falling edge of SCLx

bit 2 **SBCDE:** Slave Mode Bus Collision Detect Enable bit (I^2C Slave mode only)
1 = Enables slave bus collision interrupts
0 = Slave bus collision interrupts are disabled
If the rising edge of SCLx and SDAx is sampled low when the module is in a high state, the BCL bit is set and the bus goes Idle. This Detection mode is only valid during data and ACK transmit sequences.

bit 1 **AHEN:** Address Hold Enable bit (I^2C Slave mode only)
1 = Following the 8th falling edge of SCLx for a matching received address byte, the SCLREL (I2CxCONL<12>) bit will be cleared and SCLx will be held low
0 = Address holding is disabled

bit 0 **DHEN:** Data Hold Enable bit (I^2C Slave mode only)
1 = Following the 8th falling edge of SCLx for a received data byte, the slave hardware clears the SCLREL (I2CxCONL<12>) bit and SCLx is held low
0 = Data holding is disabled

REGISTER 17-3: I2CxSTAT: I2Cx STATUS REGISTER

R-0, HSC	R-0, HSC	R-0, HSC	U-0	U-0	R/C-0, HS	R-0, HSC	R-0, HSC
ACKSTAT	TRSTAT	ACKTIM	—	—	BCL	GCSTAT	ADD10
bit 15							bit 8

R/C-0, HS	R/C-0, HS	R-0, HSC	R/C-0, HSC	R/C-0, HSC	R-0, HSC	R-0, HSC	R-0, HSC
IWCOL	I2COV	D_A	P	S	R_W	RBF	TBF
bit 7							bit 0

Legend:	C = Clearable bit	HS = Hardware Settable bit	HSC = Hardware Settable/Clearable bit
R = Readable bit	W = Writable bit	‘0’ = Bit is cleared	x = Bit is unknown
-n = Value at POR	‘1’ = Bit is set	U = Unimplemented bit, read as ‘0’	

bit 15 **ACKSTAT:** Acknowledge Status bit (when operating as I^2C™ master, applicable to master transmit operation)
1 = NACK was received from slave
0 = ACK was received from slave
Hardware is set or clear at the end of a slave Acknowledge.

bit 14 **TRSTAT:** Transmit Status bit (when operating as I^2C master, applicable to master transmit operation)
1 = Master transmit is in progress (8 bits + ACK)
0 = Master transmit is not in progress
Hardware is set at the beginning of master transmission. Hardware is clear at the end of slave Acknowledge.

bit 13 **ACKTIM:** Acknowledge Time Status bit (I^2C Slave mode only)
1 = I^2C bus is an Acknowledge sequence, set on the 8th falling edge of SCLx
0 = Not an Acknowledge sequence, cleared on the 9th rising edge of SCLx

bit 12-11 **Unimplemented:** Read as ‘0’

bit 10 **BCL:** Master Bus Collision Detect bit
1 = A bus collision has been detected during a master operation
0 = No bus collision detected
Hardware is set at detection of a bus collision.

bit 9 **GCSTAT:** General Call Status bit
1 = General call address was received
0 = General call address was not received
Hardware is set when address matches the general call address. Hardware is clear at Stop detection.

bit 8 **ADD10:** 10-Bit Address Status bit
1 = 10-bit address was matched
0 = 10-bit address was not matched
Hardware is set at the match of the 2nd byte of the matched 10-bit address. Hardware is clear at Stop detection.

bit 7 **IWCOL:** I2Cx Write Collision Detect bit
1 = An attempt to write to the I2CxTRN register failed because the I^2C module is busy
0 = No collision
Hardware is set at the occurrence of a write to I2CxTRN while busy (cleared by software).

bit 6 **I2COV:** I2Cx Receive Overflow Flag bit
1 = A byte was received while the I2CxRCV register was still holding the previous byte
0 = No overflow
Hardware is set at an attempt to transfer I2CxRSR to I2CxRCV (cleared by software).

bit 5 **D_A:** Data/Address bit (I^2C Slave mode only)
1 = Indicates that the last byte received was data
0 = Indicates that the last byte received was a device address
Hardware is clear at a device address match. Hardware is set by reception of a slave byte.

© 2013-2015 Microchip Technology Inc.

REGISTER 17-3: I2CxSTAT: I2Cx STATUS REGISTER (CONTINUED)

bit 4 **P:** Stop bit
1 = Indicates that a Stop bit has been detected last
0 = Stop bit was not detected last
Hardware is set or clear when a Start, Repeated Start or Stop is detected.

bit 3 **S:** Start bit
1 = Indicates that a Start (or Repeated Start) bit has been detected last
0 = Start bit was not detected last
Hardware is set or clear when a Start, Repeated Start or Stop is detected.

bit 2 **R_W:** Read/Write Information bit (I^2C Slave mode only)
1 = Read – Indicates data transfer is output from the slave
0 = Write – Indicates data transfer is input to the slave
Hardware is set or clear after reception of an I^2C device address byte.

bit 1 **RBF:** Receive Buffer Full Status bit
1 = Receive is complete, I2CxRCV is full
0 = Receive is not complete, I2CxRCV is empty
Hardware is set when I2CxRCV is written with a received byte. Hardware is clear when software reads I2CxRCV.

bit 0 **TBF:** Transmit Buffer Full Status bit
1 = Transmit is in progress, I2CxTRN is full
0 = Transmit is complete, I2CxTRN is empty
Hardware is set when software writes to I2CxTRN. Hardware is clear at completion of a data transmission.

REGISTER 17-4: I2CxMSK: I2Cx SLAVE MODE ADDRESS MASK REGISTER

U-0	U-0	U-0	U-0	U-0	U-0	R/W-0	R/W-0
—	—	—	—	—	—	AMSK<9:8>	
bit 15							bit 8

R/W-0	R/W-0	R/W-0	R/W-0	R/W-0	R/W-0	R/W-0	R/W-0
AMSK<7:0>							
bit 7							bit 0

Legend:			
R = Readable bit	W = Writable bit	U = Unimplemented bit, read as ‘0’	
-n = Value at POR	‘1’ = Bit is set	‘0’ = Bit is cleared	x = Bit is unknown

bit 15-10 **Unimplemented:** Read as ‘0’

bit 9-0 **AMSK<9:0>:** Address Mask Select bits

For 10-Bit Address:

1 = Enables masking for bit Ax of incoming message address; bit match is not required in this position

0 = Disables masking for bit Ax; bit match is required in this position

For 7-Bit Address (I2CxMSK<6:0> only):

1 = Enables masking for bit Ax + 1 of incoming message address; bit match is not required in this position

0 = Disables masking for bit Ax + 1; bit match is required in this position

© 2013-2015 Microchip Technology Inc.

18.0 UNIVERSAL ASYNCHRONOUS RECEIVER TRANSMITTER (UART)

Note 1: This data sheet summarizes the features of the dsPIC33EPXXGS50X family of devices. It is not intended to be a comprehensive reference source. To complement the information in this data sheet, refer to **"Universal Asynchronous Receiver Transmitter (UART)"** (DS70000582) in the *"dsPIC33/PIC24 Family Reference Manual"*, which is available from the Microchip web site (www.microchip.com).

2: Some registers and associated bits described in this section may not be available on all devices. Refer to **Section 4.0 "Memory Organization"** in this data sheet for device-specific register and bit information.

The dsPIC33EPXXGS50X family of devices contains two UART modules.

The Universal Asynchronous Receiver Transmitter (UART) module is one of the serial I/O modules available in the dsPIC33EPXXGS50X device family. The UART is a full-duplex, asynchronous system that can communicate with peripheral devices, such as personal computers, LIN/J2602, RS-232 and RS-485 interfaces. The module also supports a hardware flow control option with the $\overline{\text{UxCTS}}$ and $\overline{\text{UxRTS}}$ pins, and also includes an IrDA® encoder and decoder.

The primary features of the UARTx module are:

- Full-Duplex, 8 or 9-Bit Data Transmission through the UxTX and UxRX Pins
- Even, Odd or No Parity Options (for 8-bit data)
- One or Two Stop bits
- Hardware Flow Control Option with $\overline{\text{UxCTS}}$ and $\overline{\text{UxRTS}}$ Pins
- Fully Integrated Baud Rate Generator with 16-Bit Prescaler
- Baud Rates Ranging from 4.375 Mbps to 67 bps in 16x mode at 70 MIPS
- Baud Rates Ranging from 17.5 Mbps to 267 bps in 4x mode at 70 MIPS
- 4-Deep First-In First-Out (FIFO) Transmit Data Buffer
- 4-Deep FIFO Receive Data Buffer
- Parity, Framing and Buffer Overrun Error Detection
- Support for 9-Bit Mode with Address Detect (9th bit = 1)
- Transmit and Receive Interrupts
- A Separate Interrupt for all UARTx Error Conditions
- Loopback mode for Diagnostic Support
- Support for Sync and Break Characters
- Support for Automatic Baud Rate Detection
- IrDA® Encoder and Decoder Logic
- 16x Baud Clock Output for IrDA Support

A simplified block diagram of the UARTx module is shown in Figure 18-1. The UARTx module consists of these key hardware elements:

- Baud Rate Generator
- Asynchronous Transmitter
- Asynchronous Receiver

FIGURE 18-1: UARTx SIMPLIFIED BLOCK DIAGRAM

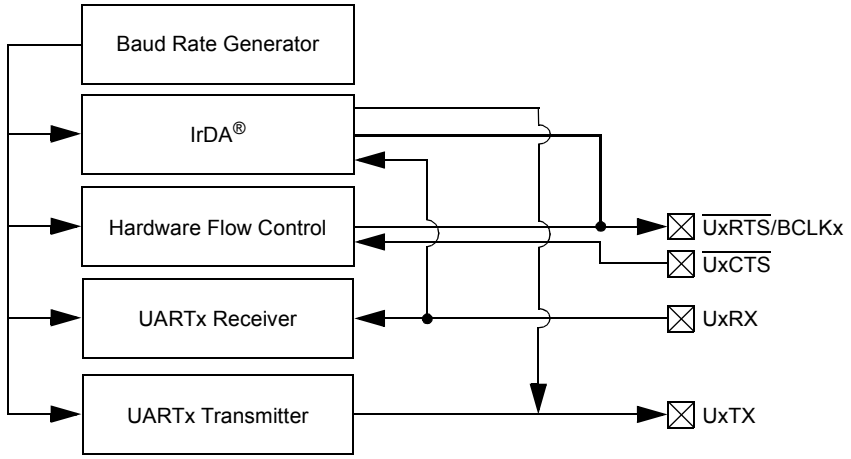

18.1 UART Helpful Tips

1. In multi-node, direct connect UART networks, UART receive inputs react to the complementary logic level defined by the URXINV bit (UxMODE<4>), which defines the Idle state, the default of which is logic high (i.e., URXINV = 0). Because remote devices do not initialize at the same time, it is likely that one of the devices, because the RX line is floating, will trigger a Start bit detection and will cause the first byte received, after the device has been initialized, to be invalid. To avoid this situation, the user should use a pull-up or pull-down resistor on the RX pin depending on the value of the URXINV bit.
   a) If URXINV = 0, use a pull-up resistor on the UxRX pin.
   b) If URXINV = 1, use a pull-down resistor on the UxRX pin.
2. The first character received on a wake-up from Sleep mode, caused by activity on the UxRX pin of the UARTx module, will be invalid. In Sleep mode, peripheral clocks are disabled. By the time the oscillator system has restarted and stabilized from Sleep mode, the baud rate bit sampling clock, relative to the incoming UxRX bit timing, is no longer synchronized, resulting in the first character being invalid; this is to be expected.

18.2 UART Resources

Many useful resources are provided on the main product page of the Microchip web site for the devices listed in this data sheet. This product page contains the latest updates and additional information.

18.2.1 KEY RESOURCES

- Code Samples
- Application Notes
- Software Libraries
- Webinars
- All Related *“dsPIC33/PIC24 Family Reference Manual”* Sections
- Development Tools

© 2013-2015 Microchip Technology Inc.

18.3 UART Control Registers

REGISTER 18-1: UxMODE: UARTx MODE REGISTER

R/W-0	U-0	R/W-0	R/W-0	R/W-0	U-0	R/W-0	R/W-0
UARTEN(1)	—	USIDL	IREN(2)	RTSMD	—	UEN1	UEN0
bit 15							bit 8

R/W-0, HC	R/W-0	R/W-0, HC	R/W-0	R/W-0	R/W-0	R/W-0	R/W-0
WAKE	LPBACK	ABAUD	URXINV	BRGH	PDSEL1	PDSEL0	STSEL
bit 7							bit 0

Legend:	HC = Hardware Clearable bit		
R = Readable bit	W = Writable bit	U = Unimplemented bit, read as ‘0’	
-n = Value at POR	‘1’ = Bit is set	‘0’ = Bit is cleared	x = Bit is unknown

bit 15 **UARTEN:** UARTx Enable bit(1)
- 1 = UARTx is enabled; all UARTx pins are controlled by UARTx as defined by UEN<1:0>
- 0 = UARTx is disabled; all UARTx pins are controlled by PORT latches; UARTx power consumption is minimal

bit 14 **Unimplemented:** Read as ‘0’

bit 13 **USIDL:** UARTx Stop in Idle Mode bit
- 1 = Discontinues module operation when device enters Idle mode
- 0 = Continues module operation in Idle mode

bit 12 **IREN:** IrDA® Encoder and Decoder Enable bit(2)
- 1 = IrDA encoder and decoder are enabled
- 0 = IrDA encoder and decoder are disabled

bit 11 **RTSMD:** Mode Selection for $\overline{\text{UxRTS}}$ Pin bit
- 1 = $\overline{\text{UxRTS}}$ pin is in Simplex mode
- 0 = $\overline{\text{UxRTS}}$ pin is in Flow Control mode

bit 10 **Unimplemented:** Read as ‘0’

bit 9-8 **UEN<1:0>:** UARTx Pin Enable bits
- 11 = UxTX, UxRX and BCLKx pins are enabled and used; $\overline{\text{UxCTS}}$ pin is controlled by PORT latches
- 10 = UxTX, UxRX, $\overline{\text{UxCTS}}$ and $\overline{\text{UxRTS}}$ pins are enabled and used
- 01 = UxTX, UxRX and $\overline{\text{UxRTS}}$ pins are enabled and used; $\overline{\text{UxCTS}}$ pin is controlled by PORT latches
- 00 = UxTX and UxRX pins are enabled and used; $\overline{\text{UxCTS}}$ and $\overline{\text{UxRTS}}$/BCLKx pins are controlled by PORT latches

bit 7 **WAKE:** Wake-up on Start Bit Detect During Sleep Mode Enable bit
- 1 = UARTx continues to sample the UxRX pin, interrupt is generated on the falling edge; bit is cleared in hardware on the following rising edge
- 0 = No wake-up is enabled

bit 6 **LPBACK:** UARTx Loopback Mode Select bit
- 1 = Enables Loopback mode
- 0 = Loopback mode is disabled

Note 1: Refer to **“Universal Asynchronous Receiver Transmitter (UART)”** (DS70000582) in the *“dsPIC33/PIC24 Family Reference Manual*” for information on enabling the UARTx module for receive or transmit operation.

2: This feature is only available for the 16x BRG mode (BRGH = 0).

REGISTER 18-1: UxMODE: UARTx MODE REGISTER (CONTINUED)

bit 5 **ABAUD:** Auto-Baud Enable bit
1 = Enables baud rate measurement on the next character – requires reception of a Sync field (55h) before other data; cleared in hardware upon completion
0 = Baud rate measurement is disabled or completed

bit 4 **URXINV:** UARTx Receive Polarity Inversion bit
1 = UxRX Idle state is '0'
0 = UxRX Idle state is '1'

bit 3 **BRGH:** High Baud Rate Enable bit
1 = BRG generates 4 clocks per bit period (4x baud clock, High-Speed mode)
0 = BRG generates 16 clocks per bit period (16x baud clock, Standard mode)

bit 2-1 **PDSEL<1:0>:** Parity and Data Selection bits
11 = 9-bit data, no parity
10 = 8-bit data, odd parity
01 = 8-bit data, even parity
00 = 8-bit data, no parity

bit 0 **STSEL:** Stop Bit Selection bit
1 = Two Stop bits
0 = One Stop bit

Note 1: Refer to **"Universal Asynchronous Receiver Transmitter (UART)"** (DS70000582) in the *"dsPIC33/PIC24 Family Reference Manual*" for information on enabling the UARTx module for receive or transmit operation.

2: This feature is only available for the 16x BRG mode (BRGH = 0).

© 2013-2015 Microchip Technology Inc.

REGISTER 18-2: UxSTA: UARTx STATUS AND CONTROL REGISTER

R/W-0	R/W-0	R/W-0	U-0	R/W-0, HC	R/W-0	R-0	R-1
UTXISEL1	UTXINV	UTXISEL0	—	UTXBRK	UTXEN(1)	UTXBF	TRMT
bit 15							bit 8

R/W-0	R/W-0	R/W-0	R-1	R-0	R-0	R/C-0	R-0
URXISEL1	URXISEL0	ADDEN	RIDLE	PERR	FERR	OERR	URXDA
bit 7							bit 0

Legend:	C = Clearable bit	HC = Hardware Clearable bit	
R = Readable bit	W = Writable bit	U = Unimplemented bit, read as ‘0’	
-n = Value at POR	‘1’ = Bit is set	‘0’ = Bit is cleared	x = Bit is unknown

bit 15,13 **UTXISEL<1:0>:** UARTx Transmission Interrupt Mode Selection bits
- 11 = Reserved; do not use
- 10 = Interrupt when a character is transferred to the Transmit Shift Register (TSR), and as a result, the transmit buffer becomes empty
- 01 = Interrupt when the last character is shifted out of the Transmit Shift Register; all transmit operations are completed
- 00 = Interrupt when a character is transferred to the Transmit Shift Register (this implies there is at least one character open in the transmit buffer)

bit 14 **UTXINV:** UARTx Transmit Polarity Inversion bit

If IREN = 0:
- 1 = UxTX Idle state is ‘0’
- 0 = UxTX Idle state is ‘1’

If IREN = 1:
- 1 = IrDA® is encoded, UxTX Idle state is ‘1’
- 0 = IrDA is encoded, UxTX Idle state is ‘0’

bit 12 **Unimplemented:** Read as ‘0’

bit 11 **UTXBRK:** UARTx Transmit Break bit
- 1 = Sends Sync Break on next transmission – Start bit, followed by twelve ‘0’ bits, followed by Stop bit; cleared by hardware upon completion
- 0 = Sync Break transmission is disabled or completed

bit 10 **UTXEN:** UARTx Transmit Enable bit(1)
- 1 = Transmit is enabled, UxTX pin is controlled by UARTx
- 0 = Transmit is disabled, any pending transmission is aborted and buffer is reset; UxTX pin is controlled by the PORT

bit 9 **UTXBF:** UARTx Transmit Buffer Full Status bit (read-only)
- 1 = Transmit buffer is full
- 0 = Transmit buffer is not full, at least one more character can be written

bit 8 **TRMT:** Transmit Shift Register Empty bit (read-only)
- 1 = Transmit Shift Register is empty and transmit buffer is empty (the last transmission has completed)
- 0 = Transmit Shift Register is not empty, a transmission is in progress or queued

bit 7-6 **URXISEL<1:0>:** UARTx Receive Interrupt Mode Selection bits
- 11 = Interrupt is set on UxRSR transfer, making the receive buffer full (i.e., has 4 data characters)
- 10 = Interrupt is set on UxRSR transfer, making the receive buffer 3/4 full (i.e., has 3 data characters)
- 0x = Interrupt is set when any character is received and transferred from the UxRSR to the receive buffer; receive buffer has one or more characters

Note 1: Refer to **“Universal Asynchronous Receiver Transmitter (UART)”** (DS70000582) in the *“dsPIC33/PIC24 Family Reference Manual”* for information on enabling the UARTx module for transmit operation.

REGISTER 18-2: UxSTA: UARTx STATUS AND CONTROL REGISTER (CONTINUED)

bit 5 **ADDEN:** Address Character Detect bit (bit 8 of received data = 1)
1 = Address Detect mode is enabled; if 9-bit mode is not selected, this does not take effect
0 = Address Detect mode is disabled

bit 4 **RIDLE:** Receiver Idle bit (read-only)
1 = Receiver is Idle
0 = Receiver is active

bit 3 **PERR:** Parity Error Status bit (read-only)
1 = Parity error has been detected for the current character (character at the top of the receive FIFO)
0 = Parity error has not been detected

bit 2 **FERR:** Framing Error Status bit (read-only)
1 = Framing error has been detected for the current character (character at the top of the receive FIFO)
0 = Framing error has not been detected

bit 1 **OERR:** Receive Buffer Overrun Error Status bit (clear/read-only)
1 = Receive buffer has overflowed
0 = Receive buffer has not overflowed; clearing a previously set OERR bit (1 → 0 transition) resets the receiver buffer and the UxRSR to the empty state

bit 0 **URXDA:** UARTx Receive Buffer Data Available bit (read-only)
1 = Receive buffer has data, at least one more character can be read
0 = Receive buffer is empty

Note 1: Refer to **"Universal Asynchronous Receiver Transmitter (UART)"** (DS70000582) in the *"dsPIC33/PIC24 Family Reference Manual"* for information on enabling the UARTx module for transmit operation.

© 2013-2015 Microchip Technology Inc.

19.0 HIGH-SPEED, 12-BIT ANALOG-TO-DIGITAL CONVERTER (ADC)

Note 1: This data sheet summarizes the features of the dsPIC33EPXXGS50X family of devices. It is not intended to be a comprehensive reference source. To complement the information in this data sheet, refer to **"12-Bit High-Speed, Multiple SARs A/D Converter (ADC)"** (DS70005213) in the *"dsPIC33/PIC24 Family Reference Manual"*, which is available from the Microchip web site (www.microchip.com).

2: Some registers and associated bits described in this section may not be available on all devices. Refer to **Section 4.0 "Memory Organization"** in this data sheet for device-specific register and bit information.

dsPIC33EPXXGS50X devices have a high-speed, 12-bit Analog-to-Digital Converter (ADC) that features a low conversion latency, high resolution and over-sampling capabilities to improve performance in AC/DC, DC/DC power converters.

19.1 Features Overview

The High Speed, 12-Bit Multiple SARs Analog-to-Digital Converter (ADC) includes the following features:

- Five ADC cores: Four dedicated cores and one shared (common) core
- User-configurable resolution of up to 12 bits for each core
- Up to 3.25 Msps conversion rate per channel at 12-bit resolution
- Low-latency conversion
- Up to 22 analog input channels, with a separate 16-bit Conversion Result register for each input
- Conversion result can be formatted as unsigned or signed data, on a per channel basis, for all channels
- Single-ended and differential conversions are available on all ADC cores
- Simultaneous sampling of up to 5 analog inputs
- Channel scan capability
- Multiple conversion trigger options for each core, including:
  - PWM1 through PWM5 (primary and secondary triggers, and current-limit event trigger)
  - PWM Special Event Trigger
  - Timer1/Timer2 period match
  - Output Compare 1 and event trigger
  - External pin trigger event (ADTRG31)
  - Software trigger
- Two integrated digital comparators with dedicated interrupts:
  - Multiple comparison options
  - Assignable to specific analog inputs
- Two oversampling filters with dedicated interrupts:
  - Provide increased resolution
  - Assignable to a specific analog input

The module consists of five independent SAR ADC cores. Simplified block diagrams of the Multiple SARs 12-Bit ADC are shown in Figure 19-1, Figure 19-2 and Figure 19-3.

The analog inputs (channels) are connected through multiplexers and switches to the Sample-and-Hold (S&H) circuit of each ADC core. The core uses the channel information (the output format, the measurement mode and the input number) to process the analog sample. When conversion is complete, the result is stored in the result buffer for the specific analog input, and passed to the digital filter and digital comparator if they were configured to use data from this particular channel.

The ADC module can sample up to five inputs at a time (four inputs from the dedicated SAR cores and one from the shared SAR core). If multiple ADC inputs request conversion on the shared core, the module will convert them in a sequential manner, starting with the lowest order input.

The ADC provides each analog input the ability to specify its own trigger source. This capability allows the ADC to sample and convert analog inputs that are associated with PWM generators operating on independent time bases.

FIGURE 19-1: ADC MODULE BLOCK DIAGRAM

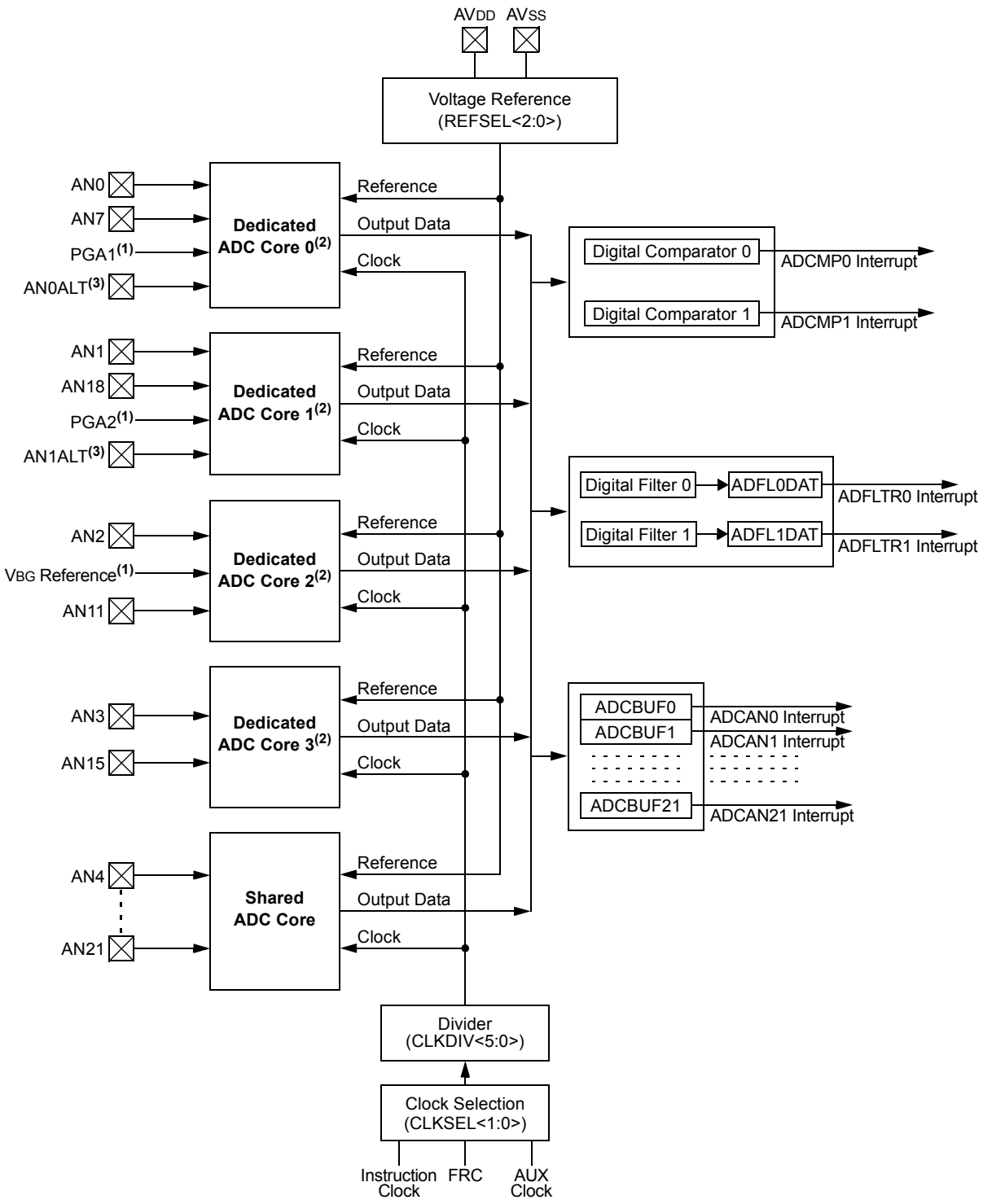

Note 1: PGA1, PGA2 and Band Gap Reference (VBG) are internal analog inputs and are not available on device pins.
2: If the dedicated core uses an alternate channel, then shared core function cannot be used.
3: AN0ALT and AN1ALT are not available on dsPIC33EPXXGS502 devices.

© 2013-2015 Microchip Technology Inc.

FIGURE 19-2: DEDICATED CORES 0 TO 3 BLOCK DIAGRAM

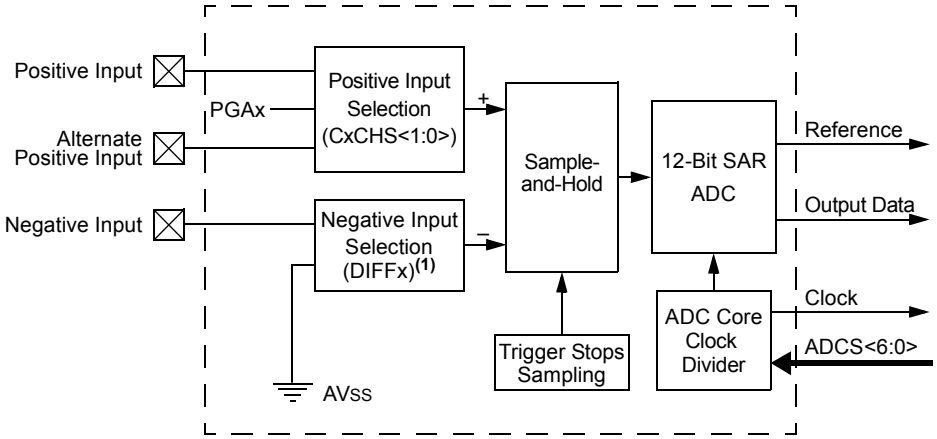

Note 1: The DIFFx bit for the corresponding positive input channel must be set in order to use the negative differential input.

FIGURE 19-3: SHARED CORE BLOCK DIAGRAM

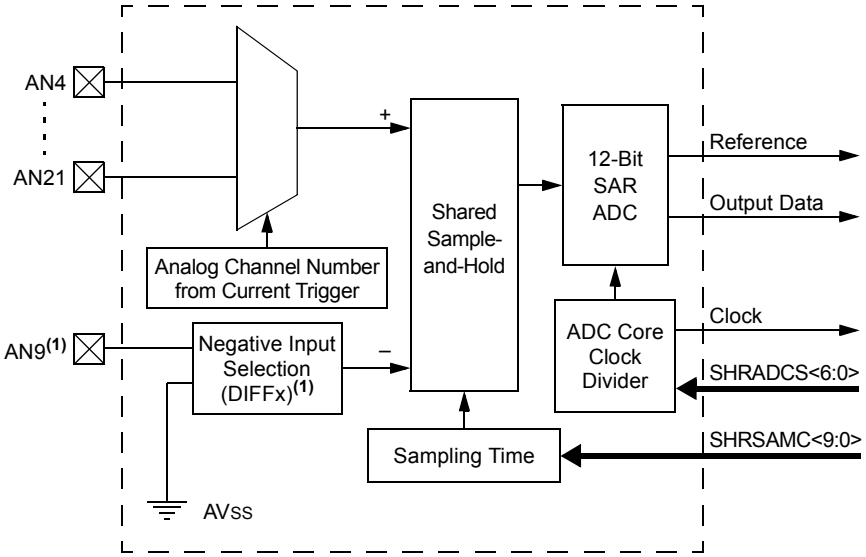

Note 1: Differential-mode conversion is not available for the shared ADC core in dsPIC33EPXXGS502 devices. For all other devices, the DIFFx bit for the corresponding positive input channel must be set to use AN9 as the negative differential input.

19.2 Analog-to-Digital Converter Resources

Many useful resources are provided on the main product page of the Microchip web site for the devices listed in this data sheet. This product page contains the latest updates and additional information.

19.2.1 KEY RESOURCES

- Code Samples
- Application Notes
- Software Libraries
- Webinars
- All Related *"dsPIC33/PIC24 Family Reference Manual"* Sections
- Development Tools

REGISTER 19-1: ADCON1L: ADC CONTROL REGISTER 1 LOW

R/W-0	U-0	R/W-0	U-0	U-0	U-0	U-0	U-0
ADON(1)	—	ADSIDL	—	—	—	—	—
bit 15							bit 8

U-0	U-0	U-0	U-0	U-0	U-0	U-0	U-0
—	—	—	—	—	—	—	—
bit 7							bit 0

Legend:			
R = Readable bit	W = Writable bit	U = Unimplemented bit, read as '0'	
-n = Value at POR	'1' = Bit is set	'0' = Bit is cleared	x = Bit is unknown

bit 15 **ADON:** ADC Enable bit(1)
1 = ADC module is enabled
0 = ADC module is off

bit 14 **Unimplemented:** Read as '0'

bit 13 **ADSIDL:** ADC Stop in Idle Mode bit
1 = Discontinues module operation when device enters Idle mode
0 = Continues module operation in Idle mode

bit 12-0 **Unimplemented:** Read as '0'

Note 1: Set the ADON bit only after the ADC module has been configured. Changing ADC Configuration bits when ADON = 1 will result in unpredictable behavior.

© 2013-2015 Microchip Technology Inc.

REGISTER 19-2: ADCON1H: ADC CONTROL REGISTER 1 HIGH

U-0	U-0	U-0	U-0	U-0	U-0	U-0	U-0
—	—	—	—	—	—	—	—
bit 15							bit 8

R/W-0	R/W-1	R/W-1	U-0	U-0	U-0	U-0	U-0
FORM	SHRRES1	SHRRES0	—	—	—	—	—
bit 7							bit 0

Legend:			
R = Readable bit	W = Writable bit	U = Unimplemented bit, read as ‘0’	
-n = Value at POR	‘1’ = Bit is set	‘0’ = Bit is cleared	x = Bit is unknown

bit 15-8 **Unimplemented:** Read as ‘0’

bit 7 **FORM:** Fractional Data Output Format bit
1 = Fractional
0 = Integer

bit 6-5 **SHRRES<1:0>:** Shared ADC Core Resolution Selection bits
11 = 12-bit resolution
10 = 10-bit resolution
01 = 8-bit resolution
00 = 6-bit resolution

bit 4-0 **Unimplemented:** Read as ‘0’

REGISTER 19-3: ADCON2L: ADC CONTROL REGISTER 2 LOW

R/W-0	R/W-0	U-0	R/W-0	U-0	R/W-0	R/W-0	R/W-0
REFCIE	REFERCIE	—	EIEN	—	SHREISEL2(1)	SHREISEL1(1)	SHREISEL0(1)
bit 15							bit 8

U-0	R/W-0	R/W-0	R/W-0	R/W-0	R/W-0	R/W-0	R/W-0
—	SHRADCS6	SHRADCS5	SHRADCS4	SHRADCS3	SHRADCS2	SHRADCS1	SHRADCS0
bit 7							bit 0

Legend:			
R = Readable bit	W = Writable bit	U = Unimplemented bit, read as ‘0’	
-n = Value at POR	‘1’ = Bit is set	‘0’ = Bit is cleared	x = Bit is unknown

bit 15 **REFCIE:** Band Gap and Reference Voltage Ready Common Interrupt Enable bit
1 = Common interrupt will be generated when the band gap will become ready
0 = Common interrupt is disabled for the band gap ready event

bit 14 **REFERCIE:** Band Gap or Reference Voltage Error Common Interrupt Enable bit
1 = Common interrupt will be generated when a band gap or reference voltage error is detected
0 = Common interrupt is disabled for the band gap and reference voltage error event

bit 13 **Unimplemented:** Read as ‘0’

bit 12 **EIEN:** Early Interrupts Enable bit
1 = The early interrupt feature is enabled for the input channel interrupts (when the EISTATx flag is set)
0 = The individual interrupts are generated when conversion is done (when the ANxRDY flag is set)

bit 11 **Unimplemented:** Read as ‘0’

bit 10-8 **SHREISEL<2:0>:** Shared Core Early Interrupt Time Selection bits(1)
111 = Early interrupt is set and interrupt is generated 8 TADCORE clocks prior to when the data is ready
110 = Early interrupt is set and interrupt is generated 7 TADCORE clocks prior to when the data is ready
101 = Early interrupt is set and interrupt is generated 6 TADCORE clocks prior to when the data is ready
100 = Early interrupt is set and interrupt is generated 5 TADCORE clocks prior to when the data is ready
011 = Early interrupt is set and interrupt is generated 4 TADCORE clocks prior to when the data is ready
010 = Early interrupt is set and interrupt is generated 3 TADCORE clocks prior to when the data is ready
001 = Early interrupt is set and interrupt is generated 2 TADCORE clocks prior to when the data is ready
000 = Early interrupt is set and interrupt is generated 1 TADCORE clock prior to when the data is ready

bit 7 **Unimplemented:** Read as ‘0’

bit 6-0 **SHRADCS<6:0>:** Shared ADC Core Input Clock Divider bits
These bits determine the number of TCORESRC (Source Clock Periods) for one shared TADCORE (Core Clock Period).
1111111 = 254 Source Clock Periods
•
•
•
0000011 = 6 Source Clock Periods
0000010 = 4 Source Clock Periods
0000001 = 2 Source Clock Periods
0000000 = 2 Source Clock Periods

Note 1: For the 6-bit shared ADC core resolution (SHRRES<1:0> = 00), the SHREISEL<2:0> settings, from ‘100’ to ‘111’, are not valid and should not be used. For the 8-bit shared ADC core resolution (SHRRES<1:0> = 01), the SHREISEL<2:0> settings, ‘110’ and ‘111’, are not valid and should not be used.

© 2013-2015 Microchip Technology Inc.

REGISTER 19-4: ADCON2H: ADC CONTROL REGISTER 2 HIGH

R-0, HSC	R-0, HSC	U-0	U-0	U-0	U-0	R/W-0	R/W-0
REFRDY	REFERR	—	—	—	—	SHRSAMC9	SHRSAMC8
bit 15							bit 8

R/W-0	R/W-0	R/W-0	R/W-0	R/W-0	R/W-0	R/W-0	R/W-0
SHRSAMC7	SHRSAMC6	SHRSAMC5	SHRSAMC4	SHRSAMC3	SHRSAMC2	SHRSAMC1	SHRSAMC0
bit 7							bit 0

Legend:	U = Unimplemented bit, read as ‘0’		
R = Readable bit	W = Writable bit	HSC = Hardware Settable/Clearable bit	
-n = Value at POR	‘1’ = Bit is set	‘0’ = Bit is cleared	x = Bit is unknown

bit 15 **REFRDY:** Band Gap and Reference Voltage Ready Flag bit
`1` = Band gap is ready
`0` = Band gap is not ready

bit 14 **REFERR:** Band Gap or Reference Voltage Error Flag bit
`1` = Band gap was removed after the ADC module was enabled (ADON = `1`)
`0` = No band gap error was detected

bit 13-10 **Unimplemented:** Read as ‘`0`’

bit 9-0 **SHRSAMC<9:0>:** Shared ADC Core Sample Time Selection bits
These bits specify the number of shared ADC Core Clock Periods (TADCORE) for the shared ADC core sample time.
`1111111111` = 1025 TADCORE
•
•
•
`0000000001` = 3 TADCORE
`0000000000` = 2 TADCORE

REGISTER 19-5: ADCON3L: ADC CONTROL REGISTER 3 LOW

R/W-0	R/W-0	R/W-0	R/W-0	R/W-0	R-0, HSC	R/W-0	R-0, HSC
REFSEL2	REFSEL1	REFSEL0	SUSPEND	SUSPCIE	SUSPRDY	SHRSAMP	CNVRTCH
bit 15							bit 8

R/W-0	R-0, HSC	R/W-0	R/W-0	R/W-0	R/W-0	R/W-0	R/W-0
SWLCTRG	SWCTRG	CNVCHSEL5	CNVCHSEL4	CNVCHSEL3	CNVCHSEL2	CNVCHSEL1	CNVCHSEL0
bit 7							bit 0

Legend:	U = Unimplemented bit, read as ‘0’		
R = Readable bit	W = Writable bit	HSC = Hardware Settable/Clearable bit	
-n = Value at POR	‘1’ = Bit is set	‘0’ = Bit is cleared	x = Bit is unknown

bit 15-13 **REFSEL<2:0>:** ADC Reference Voltage Selection bits

Value	VREFH	VREFL
000	AVDD	AVSS

001-111 = **Unimplemented:** Do not use

bit 12 **SUSPEND:** All ADC Cores Triggers Disable bit

1 = All new trigger events for all ADC cores are disabled
0 = All ADC cores can be triggered

bit 11 **SUSPCIE:** Suspend All ADC Cores Common Interrupt Enable bit

1 = Common interrupt will be generated when ADC core triggers are suspended (SUSPEND bit = 1) and all previous conversions are finished (SUSPRDY bit becomes set)
0 = Common interrupt is not generated for suspend ADC cores event

bit 10 **SUSPRDY:** All ADC Cores Suspended Flag bit

1 = All ADC cores are suspended (SUSPEND bit = 1) and have no conversions in progress
0 = ADC cores have previous conversions in progress

bit 9 **SHRSAMP:** Shared ADC Core Sampling Direct Control bit

This bit should be used with the individual channel conversion trigger controlled by the CNVRTCH bit. It connects an analog input, specified by the CNVCHSEL<5:0> bits, to the shared ADC core and allows extending the sampling time. This bit is not controlled by hardware and must be cleared before the conversion starts (setting CNVRTCH to ‘1’).

1 = Shared ADC core samples an analog input specified by the CNVCHSEL<5:0> bits
0 = Sampling is controlled by the shared ADC core hardware

bit 8 **CNVRTCH:** Software Individual Channel Conversion Trigger bit

1 = Single trigger is generated for an analog input specified by the CNVCHSEL<5:0> bits; when the bit is set, it is automatically cleared by hardware on the next instruction cycle
0 = Next individual channel conversion trigger can be generated

bit 7 **SWLCTRG:** Software Level-Sensitive Common Trigger bit

1 = Triggers are continuously generated for all channels with the software, level-sensitive common trigger selected as a source in the ADTRIGxL and ADTRIGxH registers
0 = No software, level-sensitive common triggers are generated

bit 6 **SWCTRG:** Software Common Trigger bit

1 = Single trigger is generated for all channels with the software, common trigger selected as a source in the ADTRIGxL and ADTRIGxH registers; when the bit is set, it is automatically cleared by hardware on the next instruction cycle
0 = Ready to generate the next software, common trigger

bit 5-0 **CNVCHSEL <5:0>:** Channel Number Selection for Software Individual Channel Conversion Trigger bits

These bits define a channel to be converted when the CNVRTCH bit is set.

© 2013-2015 Microchip Technology Inc.

REGISTER 19-6: ADCON3H: ADC CONTROL REGISTER 3 HIGH

R/W-0	R/W-0	R/W-0	R/W-0	R/W-0	R/W-0	R/W-0	R/W-0
CLKSEL1	CLKSEL0	CLKDIV5	CLKDIV4	CLKDIV3	CLKDIV2	CLKDIV1	CLKDIV0
bit 15							bit 8

R/W-0	U-0	U-0	U-0	R/W-0	R/W-0	R/W-0	R/W-0
SHREN	—	—	—	C3EN	C2EN	C1EN	C0EN
bit 7							bit 0

Legend:			
R = Readable bit	W = Writable bit	U = Unimplemented bit, read as ‘0’	
-n = Value at POR	‘1’ = Bit is set	‘0’ = Bit is cleared	x = Bit is unknown

bit 15-14 **CLKSEL<1:0>:** ADC Module Clock Source Selection bits
11 = APLL
10 = FRC
01 = FOSC (System Clock x 2)
00 = FSYS (System Clock)

bit 13-8 **CLKDIV<5:0>:** ADC Module Clock Source Divider bits
The divider forms a TCORESRC clock used by all ADC cores (shared and dedicated) from the TSRC ADC module clock source selected by the CLKSEL<2:0> bits. Then, each ADC core individually divides the TCORESRC clock to get a core-specific TADCORE clock using the ADCS<6:0> bits in the ADCORExH register or the SHRADCS<6:0> bits in the ADCON2L register.
111111 = 64 Source Clock Periods
•
•
•
000011 = 4 Source Clock Periods
000010 = 3 Source Clock Periods
000001 = 2 Source Clock Periods
000000 = 1 Source Clock Period

bit 7 **SHREN:** Shared ADC Core Enable bit
1 = Shared ADC core is enabled
0 = Shared ADC core is disabled

bit 6-4 **Unimplemented:** Read as ‘0’

bit 3 **C3EN:** Dedicated ADC Core 3 Enable bits
1 = Dedicated ADC Core 3 is enabled
0 = Dedicated ADC Core 3 is disabled

bit 2 **C2EN:** Dedicated ADC Core 2 Enable bits
1 = Dedicated ADC Core 2 is enabled
0 = Dedicated ADC Core 2 is disabled

bit 1 **C1EN:** Dedicated ADC Core 1 Enable bits
1 = Dedicated ADC Core 1 is enabled
0 = Dedicated ADC Core 1 is disabled

bit 0 **C0EN:** Dedicated ADC Core 0 Enable bits
1 = Dedicated ADC Core 0 is enabled
0 = Dedicated ADC Core 0 is disabled

REGISTER 19-7: ADCON4L: ADC CONTROL REGISTER 4 LOW

U-0	U-0	U-0	U-0	R/W-0	R/W-0	R/W-0	R/W-0
—	—	—	—	SYNCTRG3	SYNCTRG2	SYNCTRG1	SYNCTRG0
bit 15							bit 8

U-0	U-0	U-0	U-0	R/W-0	R/W-0	R/W-0	R/W-0
—	—	—	—	SAMC3EN	SAMC2EN	SAMC1EN	SAMC0EN
bit 7							bit 0

Legend:			
R = Readable bit	W = Writable bit	U = Unimplemented bit, read as ‘0’	
-n = Value at POR	‘1’ = Bit is set	‘0’ = Bit is cleared	x = Bit is unknown

bit 15-12 **Unimplemented:** Read as ‘0’

bit 11 **SYNCTRG3:** Dedicated ADC Core 3 Trigger Synchronization bit
1 = All triggers are synchronized with the core source clock (TCORESRC)
0 = The ADC core triggers are not synchronized

bit 10 **SYNCTRG2:** Dedicated ADC Core 2 Trigger Synchronization bit
1 = All triggers are synchronized with the core source clock (TCORESRC)
0 = The ADC core triggers are not synchronized

bit 9 **SYNCTRG1:** Dedicated ADC Core 1 Trigger Synchronization bit
1 = All triggers are synchronized with the core source clock (TCORESRC)
0 = The ADC core triggers are not synchronized

bit 8 **SYNCTRG0:** Dedicated ADC Core 0 Trigger Synchronization bit
1 = All triggers are synchronized with the core source clock (TCORESRC)
0 = The ADC core triggers are not synchronized

bit 7-4 **Unimplemented:** Read as ‘0’

bit 3 **SAMC3EN:** Dedicated ADC Core 3 Conversion Delay Enable bit
1 = After trigger, the conversion will be delayed and the ADC core will continue sampling during the time specified by the SAMC<9:0> bits in the ADCORE3L register
0 = After trigger, the sampling will be stopped immediately and the conversion will be started on the next core clock cycle

bit 2 **SAMC2EN:** Dedicated ADC Core 2 Conversion Delay Enable bit
1 = After trigger, the conversion will be delayed and the ADC core will continue sampling during the time specified by the SAMC<9:0> bits in the ADCORE2L register
0 = After trigger, the sampling will be stopped immediately and the conversion will be started on the next core clock cycle

bit 1 **SAMC1EN:** Dedicated ADC Core 1 Conversion Delay Enable bit
1 = After trigger, the conversion will be delayed and the ADC core will continue sampling during the time specified by the SAMC<9:0> bits in the ADCORE1L register
0 = After trigger, the sampling will be stopped immediately and the conversion will be started on the next core clock cycle

bit 0 **SAMC0EN:** Dedicated ADC Core 0 Conversion Delay Enable bit
1 = After trigger, the conversion will be delayed and the ADC core will continue sampling during the time specified by the SAMC<9:0> bits in the ADCORE0L register
0 = After trigger, the sampling will be stopped immediately and the conversion will be started on the next core clock cycle

© 2013-2015 Microchip Technology Inc.

REGISTER 19-8: ADCON4H: ADC CONTROL REGISTER 4 HIGH

U-0	U-0	U-0	U-0	U-0	U-0	U-0	U-0
—	—	—	—	—	—	—	—
bit 15							bit 8

R/W-0	R/W-0	R/W-0	R/W-0	R/W-0	R/W-0	R/W-0	R/W-0
C3CHS1	C3CHS0	C2CHS1	C2CHS0	C1CHS1	C1CHS0	C0CHS1	C0CHS0
bit 7							bit 0

Legend:			
R = Readable bit	W = Writable bit	U = Unimplemented bit, read as ‘0’	
-n = Value at POR	‘1’ = Bit is set	‘0’ = Bit is cleared	x = Bit is unknown

bit 15-8 **Unimplemented:** Read as ‘0’

bit 7-6 **C3CHS<1:0>:** Dedicated ADC Core 3 Input Channel Selection bits
1x = Reserved
01 = AN15 (differential negative input when DIFF3 (ADMOD0L<7>) = 1)
00 = AN3

bit 5-4 **C2CHS<1:0>:** Dedicated ADC Core 2 Input Channel Selection bits
11 = Reserved
10 = VREF Band Gap
01 = AN11 (differential negative input when DIFF2 (ADMOD0L<5>) = 1)
00 = AN2

bit 3-2 **C1CHS<1:0>:** Dedicated ADC Core 1 Input Channel Selection bits
11 = AN1ALT
10 = PGA2
01 = AN18 (differential negative input when DIFF1 (ADMOD0L<3>) = 1)
00 = AN1

bit 1-0 **C0CHS<1:0>:** Dedicated ADC Core 0 Input Channel Selection bits
11 = AN0ALT
10 = PGA1
01 = AN7 (differential negative input when DIFF0 (ADMOD0L<1>) = 1)
00 = AN0

REGISTER 19-9: ADCON5L: ADC CONTROL REGISTER 5 LOW

R-0, HSC	U-0	U-0	U-0	R-0, HSC	R-0, HSC	R-0, HSC	R-0, HSC
SHRRDY	—	—	—	C3RDY	C2RDY	C1RDY	C0RDY
bit 15							bit 8

R/W-0	U-0	U-0	U-0	R/W-0	R/W-0	R/W-0	R/W-0
SHRPWR	—	—	—	C3PWR	C2PWR	C1PWR	C0PWR
bit 7							bit 0

Legend:	U = Unimplemented bit, read as ‘0’		
R = Readable bit	W = Writable bit	HSC = Hardware Settable/Clearable bit	
-n = Value at POR	‘1’ = Bit is set	‘0’ = Bit is cleared	x = Bit is unknown

bit 15 **SHRRDY:** Shared ADC Core Ready Flag bit
1 = ADC core is powered and ready for operation
0 = ADC core is not ready for operation

bit 14-12 **Unimplemented:** Read as ‘0’

bit 11 **C3RDY:** Dedicated ADC Core 3 Ready Flag bit
1 = ADC core is powered and ready for operation
0 = ADC core is not ready for operation

bit 10 **C2RDY:** Dedicated ADC Core 2 Ready Flag bit
1 = ADC core is powered and ready for operation
0 = ADC core is not ready for operation

bit 9 **C1RDY:** Dedicated ADC Core 1 Ready Flag bit
1 = ADC core is powered and ready for operation
0 = ADC core is not ready for operation

bit 8 **C0RDY:** Dedicated ADC Core 0 Ready Flag bit
1 = ADC core is powered and ready for operation
0 = ADC core is not ready for operation

bit 7 **SHRPWR:** Shared ADC Core x Power Enable bit
1 = ADC Core x is powered
0 = ADC Core x is off

bit 6-4 **Unimplemented:** Read as ‘0’

bit 3 **C3PWR:** Dedicated ADC Core 3 Power Enable bit
1 = ADC core is powered
0 = ADC core is off

bit 2 **C2PWR:** Dedicated ADC Core 2 Power Enable bit
1 = ADC core is powered
0 = ADC core is off

bit 1 **C1PWR:** Dedicated ADC Core 1 Power Enable bit
1 = ADC core is powered
0 = ADC core is off

bit 0 **C0PWR:** Dedicated ADC Core 0 Power Enable bit
1 = ADC core is powered
0 = ADC core is off

© 2013-2015 Microchip Technology Inc.

REGISTER 19-10: ADCON5H: ADC CONTROL REGISTER 5 HIGH

U-0	U-0	U-0	U-0	R/W-0	R/W-0	R/W-0	R/W-0
—	—	—	—	WARMTIME3	WARMTIME2	WARMTIME1	WARMTIME0
bit 15							bit 8

R/W-0	U-0	U-0	U-0	R/W-0	R/W-0	R/W-0	R/W-0
SHRCIE	—	—	—	C3CIE	C2CIE	C1CIE	C0CIE
bit 7							bit 0

Legend:			
R = Readable bit	W = Writable bit	U = Unimplemented bit, read as ‘0’	
-n = Value at POR	‘1’ = Bit is set	‘0’ = Bit is cleared	x = Bit is unknown

bit 15-12 **Unimplemented:** Read as ‘0’

bit 11-8 **WARMTIME<3:0>:** ADC Dedicated Core x Power-up Delay bits

These bits determine the power-up delay in the number of the Core Source Clock Periods ($T_{CORESRC}$) for all ADC cores.

1111 = 32768 Source Clock Periods
1110 = 16384 Source Clock Periods
1101 = 8192 Source Clock Periods
1100 = 4096 Source Clock Periods
1011 = 2048 Source Clock Periods
1010 = 1024 Source Clock Periods
1001 = 512 Source Clock Periods
1000 = 256 Source Clock Periods
0111 = 128 Source Clock Periods
0110 = 64 Source Clock Periods
0101 = 32 Source Clock Periods
0100 = 16 Source Clock Periods
00xx = 16 Source Clock Periods

bit 7 **SHRCIE:** Shared ADC Core Ready Common Interrupt Enable bit

1 = Common interrupt will be generated when ADC core is powered and ready for operation
0 = Common interrupt is disabled for an ADC core ready event

bit 6-4 **Unimplemented:** Read as ‘0’

bit 3 **C3CIE:** Dedicated ADC Core 3 Ready Common Interrupt Enable bit

1 = Common interrupt will be generated when ADC Core 3 is powered and ready for operation
0 = Common interrupt is disabled for an ADC Core 3 ready event

bit 2 **C2CIE:** Dedicated ADC Core 2 Ready Common Interrupt Enable bit

1 = Common interrupt will be generated when ADC Core 2 is powered and ready for operation
0 = Common interrupt is disabled for an ADC Core 2 ready event

bit 1 **C1CIE:** Dedicated ADC Core 1 Ready Common Interrupt Enable bit

1 = Common interrupt will be generated when ADC Core 1 is powered and ready for operation
0 = Common interrupt is disabled for an ADC Core 1 ready event

bit 0 **C0CIE:** Dedicated ADC Core 0 Ready Common Interrupt Enable bit

1 = Common interrupt will be generated when ADC Core 0 is powered and ready for operation
0 = Common interrupt is disabled for an ADC Core 0 ready event

REGISTER 19-11: ADCORExL: DEDICATED ADC CORE x CONTROL REGISTER LOW (x = 0 to 3)

U-0	U-0	U-0	U-0	U-0	U-0	R/W-0	R/W-0
—	—	—	—	—	—	SAMC<9:8>	
bit 15							bit 8

R/W-0	R/W-0	R/W-0	R/W-0	R/W-0	R/W-0	R/W-0	R/W-0
SAMC<7:0>							
bit 7							bit 0

Legend:			
R = Readable bit	W = Writable bit	U = Unimplemented bit, read as ‘0’	
-n = Value at POR	‘1’ = Bit is set	‘0’ = Bit is cleared	x = Bit is unknown

bit 15-10 **Unimplemented:** Read as ‘0’

bit 9-0 **SAMC<9:0>:** Dedicated ADC Core x Conversion Delay Selection bits

These bits determine the time between the trigger event and the start of conversion in the number of the Core Clock Periods (TADCORE). During this time, the ADC Core x still continues sampling. This feature is enabled by the SAMCxEN bits in the ADCON4L register.

1111111111 = 1025 TADCORE
•
•
•
0000000001 = 3 TADCORE
0000000000 = 2 TADCORE

© 2013-2015 Microchip Technology Inc.

REGISTER 19-12: ADCORExH: DEDICATED ADC CORE x CONTROL REGISTER HIGH (x = 0 to 3)[1]

U-0	U-0	U-0	R/W-0	R/W-0	R/W-0	R/W-1	R/W-1
—	—	—	EISEL2	EISEL1	EISEL0	RES1	RES0
bit 15							bit 8

U-0	R/W-0	R/W-0	R/W-0	R/W-0	R/W-0	R/W-0	R/W-0
—	ADCS6	ADCS5	ADCS4	ADCS3	ADCS2	ADCS1	ADCS0
bit 7							bit 0

Legend:			
R = Readable bit	W = Writable bit	U = Unimplemented bit, read as ‘0’	
-n = Value at POR	‘1’ = Bit is set	‘0’ = Bit is cleared	x = Bit is unknown

bit 15-13 **Unimplemented:** Read as ‘0’

bit 12-10 **EISEL<2:0>:** ADC Core x Early Interrupt Time Selection bits

111 = Early interrupt is set and an interrupt is generated 8 TADCORE clocks prior to when the data is ready
110 = Early interrupt is set and an interrupt is generated 7 TADCORE clocks prior to when the data is ready
101 = Early interrupt is set and an interrupt is generated 6 TADCORE clocks prior to when the data is ready
100 = Early interrupt is set and an interrupt is generated 5 TADCORE clocks prior to when the data is ready
011 = Early interrupt is set and an interrupt is generated 4 TADCORE clocks prior to when the data is ready
010 = Early interrupt is set and an interrupt is generated 3 TADCORE clocks prior to when the data is ready
001 = Early interrupt is set and an interrupt is generated 2 TADCORE clocks prior to when the data is ready
000 = Early interrupt is set and an interrupt is generated 1 TADCORE clock prior to when the data is ready

bit 9-8 **RES<1:0>:** ADC Core x Resolution Selection bits

11 = 12-bit resolution
10 = 10-bit resolution
01 = 8-bit resolution
00 = 6-bit resolution

bit 7 **Unimplemented:** Read as ‘0’

bit 6-0 **ADCS<6:0>:** ADC Core x Input Clock Divider bits

These bits determine the number of Source Clock Periods (TCORESRC) for one Core Clock Period (TADCORE).

1111111 = 254 Source Clock Periods
•
•
•
0000011 = 6 Source Clock Periods
0000010 = 4 Source Clock Periods
0000001 = 2 Source Clock Periods
0000000 = 2 Source Clock Periods

Note 1: For the 6-bit ADC core resolution (RES<1:0> = 00), the EISEL<2:0> bits settings, from ‘100’ to ‘111’, are not valid and should not be used. For the 8-bit ADC core resolution (RES<1:0> = 01), the EISEL<2:0> bits settings, ‘110’ and ‘111’, are not valid and should not be used.

REGISTER 19-13: ADLVLTRGL: ADC LEVEL-SENSITIVE TRIGGER CONTROL REGISTER LOW

R/W-0	R/W-0	U-0	U-0	R/W-0	R/W-0	R/W-0	R/W-0
LVLEN<15:8>							
bit 15							bit 8

R/W-0	R/W-0	R/W-0	R/W-0	R/W-0	R/W-0	R/W-0	R/W-0
LVLEN<7:0>							
bit 7							bit 0

Legend:			
R = Readable bit	W = Writable bit	U = Unimplemented bit, read as ‘0’	
-n = Value at POR	‘1’ = Bit is set	‘0’ = Bit is cleared	x = Bit is unknown

bit 15-0 **LVLEN<15:0>:** Level Trigger for Corresponding Analog Input Enable bits
1 = Input trigger is level-sensitive
0 = Input trigger is edge-sensitive

REGISTER 19-14: ADLVLTRGH: ADC LEVEL-SENSITIVE TRIGGER CONTROL REGISTER HIGH

U-0	U-0	U-0	U-0	U-0	U-0	U-0	U-0
—	—	—	—	—	—	—	—
bit 15							bit 8

U-0	U-0	R/W-0	R/W-0	R/W-0	R/W-0	R/W-0	R/W-0
—	—	LVLEN<21:16>					
bit 7							bit 0

Legend:			
R = Readable bit	W = Writable bit	U = Unimplemented bit, read as ‘0’	
-n = Value at POR	‘1’ = Bit is set	‘0’ = Bit is cleared	x = Bit is unknown

bit 15-6 **Unimplemented:** Read as ‘0’

bit 5-0 **LVLEN<21:16>:** Level Trigger for Corresponding Analog Input Enable bits
1 = Input trigger is level-sensitive
0 = Input trigger is edge-sensitive

© 2013-2015 Microchip Technology Inc.

REGISTER 19-15: ADEIEL: ADC EARLY INTERRUPT ENABLE REGISTER LOW

R/W-0	R/W-0	R/W-0	R/W-0	R/W-0	R/W-0	R/W-0	R/W-0
EIEN<15:8>							
bit 15							bit 8

R/W-0	R/W-0	R/W-0	R/W-0	R/W-0	R/W-0	R/W-0	R/W-0
EIEN<7:0>							
bit 7							bit 0

Legend:			
R = Readable bit	W = Writable bit	U = Unimplemented bit, read as ‘0’	
-n = Value at POR	‘1’ = Bit is set	‘0’ = Bit is cleared	x = Bit is unknown

bit 15-0 **EIEN<15:0>:** Early Interrupt Enable for Corresponding Analog Inputs bits
1 = Early interrupt is enabled for the channel
0 = Early interrupt is disabled for the channel

REGISTER 19-16: ADEIEH: ADC EARLY INTERRUPT ENABLE REGISTER HIGH

U-0	U-0	U-0	U-0	U-0	U-0	U-0	U-0
—	—	—	—	—	—	—	—
bit 15							bit 8

U-0	U-0	R/W-0	R/W-0	R/W-0	R/W-0	R/W-0	R/W-0
—	—	EIEN<21:16>					
bit 7							bit 0

Legend:			
R = Readable bit	W = Writable bit	U = Unimplemented bit, read as ‘0’	
-n = Value at POR	‘1’ = Bit is set	‘0’ = Bit is cleared	x = Bit is unknown

bit 15-6 **Unimplemented:** Read as ‘0’

bit 5-0 **EIEN<21:16>:** Early Interrupt Enable for Corresponding Analog Inputs bits
1 = Early interrupt is enabled for the channel
0 = Early interrupt is disabled for the channel

REGISTER 19-17: ADEISTATL: ADC EARLY INTERRUPT STATUS REGISTER LOW

R/W-0	R/W-0	R/W-0	R/W-0	R/W-0	R/W-0	R/W-0	R/W-0
EISTAT<15:8>							
bit 15							bit 8

R/W-0	R/W-0	R/W-0	R/W-0	R/W-0	R/W-0	R/W-0	R/W-0
EISTAT<7:0>							
bit 7							bit 0

Legend:			
R = Readable bit	W = Writable bit	U = Unimplemented bit, read as ‘0’	
-n = Value at POR	‘1’ = Bit is set	‘0’ = Bit is cleared	x = Bit is unknown

bit 15-0 **EISTAT<15:0>:** Early Interrupt Status for Corresponding Analog Inputs bits
1 = Early interrupt was generated
0 = Early interrupt was not generated since the last ADCBUFx read

REGISTER 19-18: ADEISTATH: ADC EARLY INTERRUPT STATUS REGISTER HIGH

U-0	U-0	U-0	U-0	U-0	U-0	U-0	U-0
—	—	—	—	—	—	—	—
bit 15							bit 8

U-0	U-0	R/W-0	R/W-0	R/W-0	R/W-0	R/W-0	R/W-0
—	—	EISTAT<21:16>					
bit 7							bit 0

Legend:			
R = Readable bit	W = Writable bit	U = Unimplemented bit, read as ‘0’	
-n = Value at POR	‘1’ = Bit is set	‘0’ = Bit is cleared	x = Bit is unknown

bit 15-6 **Unimplemented:** Read as ‘0’

bit 5-0 **EISTAT<21:16>:** Early Interrupt Status for Corresponding Analog Inputs bits
1 = Early interrupt was generated
0 = Early interrupt was not generated since the last ADCBUFx read

© 2013-2015 Microchip Technology Inc.

REGISTER 19-19: ADMOD0L: ADC INPUT MODE CONTROL REGISTER 0 LOW

R/W-0	R/W-0	R/W-0	R/W-0	R/W-0	R/W-0	R/W-0	R/W-0
DIFF7	SIGN7	DIFF6	SIGN6	DIFF5	SIGN5	DIFF4	SIGN4
bit 15							bit 8

R/W-0	R/W-0	R/W-0	R/W-0	R/W-0	R/W-0	R/W-0	R/W-0
DIFF3	SIGN3	DIFF2	SIGN2	DIFF1	SIGN1	DIFF0	SIGN0
bit 7							bit 0

Legend:			
R = Readable bit	W = Writable bit	U = Unimplemented bit, read as ‘0’	
-n = Value at POR	‘1’ = Bit is set	‘0’ = Bit is cleared	x = Bit is unknown

bit 15-1(odd) **DIFF<7:0>:** Differential-Mode for Corresponding Analog Inputs bits
1 = Channel is differential
0 = Channel is single-ended

bit 14-0 (even) **SIGN<7:0>:** Output Data Sign for Corresponding Analog Inputs bits
1 = Channel output data is signed
0 = Channel output data is unsigned

REGISTER 19-20: ADMOD0H: ADC INPUT MODE CONTROL REGISTER 0 HIGH

R/W-0	R/W-0	R/W-0	R/W-0	R/W-0	R/W-0	R/W-0	R/W-0
DIFF15	SIGN15	DIFF14	SIGN14	DIFF13	SIGN13	DIFF12	SIGN12
bit 15							bit 8

R/W-0	R/W-0	R/W-0	R/W-0	R/W-0	R/W-0	R/W-0	R/W-0
DIFF11	SIGN11	DIFF10	SIGN10	DIFF9	SIGN9	DIFF8	SIGN8
bit 7							bit 0

Legend:			
R = Readable bit	W = Writable bit	U = Unimplemented bit, read as ‘0’	
-n = Value at POR	‘1’ = Bit is set	‘0’ = Bit is cleared	x = Bit is unknown

bit 15-1(odd) **DIFF<15:8>:** Differential-Mode for Corresponding Analog Inputs bits
1 = Channel is differential
0 = Channel is single-ended

bit 14-0 (even) **SIGN<15:8>:** Output Data Sign for Corresponding Analog Inputs bits
1 = Channel output data is signed
0 = Channel output data is unsigned

REGISTER 19-21: ADMOD1L: ADC INPUT MODE CONTROL REGISTER 1 LOW

U-0	U-0	U-0	U-0	R/W-0	R/W-0	R/W-0	R/W-0
—	—	—	—	DIFF21	SIGN21	DIFF20	SIGN20
bit 15							bit 8

R/W-0	R/W-0	R/W-0	R/W-0	R/W-0	R/W-0	R/W-0	R/W-0
DIFF19	SIGN19	DIFF18	SIGN18	DIFF17	SIGN17	DIFF16	SIGN16
bit 7							bit 0

Legend:			
R = Readable bit	W = Writable bit	U = Unimplemented bit, read as ‘0’	
-n = Value at POR	‘1’ = Bit is set	‘0’ = Bit is cleared	x = Bit is unknown

bit 15-12 **Unimplemented:** Read as ‘0’

bit 11-1(odd) **DIFF<21:16>:** Differential-Mode for Corresponding Analog Inputs bits
1 = Channel is differential
0 = Channel is single-ended

bit 10-0 (even) **SIGN<21:16>:** Output Data Sign for Corresponding Analog Inputs bits
1 = Channel output data is signed
0 = Channel output data is unsigned

© 2013-2015 Microchip Technology Inc.

REGISTER 19-22: ADIEL: ADC INTERRUPT ENABLE REGISTER LOW

R/W-0	R/W-0	R/W-0	R/W-0	R/W-0	R/W-0	R/W-0	R/W-0
IE<15:8>							
bit 15							bit 8

R/W-0	R/W-0	R/W-0	R/W-0	R/W-0	R/W-0	R/W-0	R/W-0
IE<7:0>							
bit 7							bit 0

Legend:			
R = Readable bit	W = Writable bit	U = Unimplemented bit, read as ‘0’	
-n = Value at POR	‘1’ = Bit is set	‘0’ = Bit is cleared	x = Bit is unknown

bit 15-0 **IE<15:0>:** Common Interrupt Enable bits
1 = Common and individual interrupts are enabled for the corresponding channel
0 = Common and individual interrupts are disabled for the corresponding channel

REGISTER 19-23: ADIEH: ADC INTERRUPT ENABLE REGISTER HIGH

U-0	U-0	U-0	U-0	U-0	U-0	U-0	U-0
—	—	—	—	—	—	—	—
bit 15							bit 8

U-0	U-0	R/W-0	R/W-0	R/W-0	R/W-0	R/W-0	R/W-0
—	—	IE21	IE20	IE19	IE18	IE17	IE16
bit 7							bit 0

Legend:			
R = Readable bit	W = Writable bit	U = Unimplemented bit, read as ‘0’	
-n = Value at POR	‘1’ = Bit is set	‘0’ = Bit is cleared	x = Bit is unknown

bit 15-6 **Unimplemented:** Read as ‘0’

bit 5-0 **IE<21:16>:** Common Interrupt Enable bits
1 = Common and individual interrupts are enabled for the corresponding channel
0 = Common and individual interrupts are disabled for the corresponding channel

REGISTER 19-24: ADSTATL: ADC DATA READY STATUS REGISTER LOW

R-0, HSC	R-0, HSC	R-0, HSC	R-0, HSC	R-0, HSC	R-0, HSC	R-0, HSC	R-0, HSC
AN<15:8>RDY							
bit 15							bit 8

R-0, HSC	R-0, HSC	R-0, HSC	R-0, HSC	R-0, HSC	R-0, HSC	R-0, HSC	R-0, HSC
AN<7:0>RDY							
bit 7							bit 0

Legend:	U = Unimplemented bit, read as ‘0’		
R = Readable bit	W = Writable bit	HSC = Hardware Settable/Clearable bit	
-n = Value at POR	‘1’ = Bit is set	‘0’ = Bit is cleared	x = Bit is unknown

bit 15-0 **AN<15:0>RDY:** Common Interrupt Enable for Corresponding Analog Inputs bits
1 = Channel conversion result is ready in the corresponding ADCBUFx register
0 = Channel conversion result is not ready

REGISTER 19-25: ADSTATH: ADC DATA READY STATUS REGISTER HIGH

U-0	U-0	U-0	U-0	U-0	U-0	U-0	U-0
—	—	—	—	—	—	—	—
bit 15							bit 8

U-0	U-0	R-0, HSC	R-0, HSC	R-0, HSC	R-0, HSC	R-0, HSC	R-0, HSC
—	—	AN<21:16>RDY					
bit 7							bit 0

Legend:	U = Unimplemented bit, read as ‘0’		
R = Readable bit	W = Writable bit	HSC = Hardware Settable/Clearable bit	
-n = Value at POR	‘1’ = Bit is set	‘0’ = Bit is cleared	x = Bit is unknown

bit 15-6 **Unimplemented:** Read as ‘0’

bit 5-0 **AN<21:16>RDY:** Common Interrupt Enable for Corresponding Analog Inputs bits
1 = Channel conversion result is ready in the corresponding ADCBUFx register
0 = Channel conversion result is not ready

© 2013-2015 Microchip Technology Inc.

REGISTER 19-26: ADTRIGxL AND ADTRIGxH: ADC CHANNEL TRIGGER x SELECTION REGISTERS LOW AND HIGH (x = 0 to 5)

U-0	U-0	U-0	R/W-0	R/W-0	R/W-0	R/W-0	R/W-0
—	—	—	TRGSRC(x+1)4	TRGSRC(x+1)3	TRGSRC(x+1)2	TRGSRC(x+1)1	TRGSRC(x+1)0
bit 15							bit 8

U-0	U-0	U-0	R/W-0	R/W-0	R/W-0	R/W-0	R/W-0
—	—	—	TRGSRCx4	TRGSRCx3	TRGSRCx2	TRGSRCx1	TRGSRCx0
bit 7							bit 0

Legend:			
R = Readable bit	W = Writable bit	U = Unimplemented bit, read as ‘0’	
-n = Value at POR	‘1’ = Bit is set	‘0’ = Bit is cleared	x = Bit is unknown

bit 15-13 **Unimplemented:** Read as ‘0’

bit 12-8 **TRGSRC(x+1)<4:0>:** Trigger Source Selection for Corresponding Analog Inputs bits

11111 = ADTRG31
11110 = Reserved
11101 = Reserved
11100 = Reserved
11011 = Reserved
11010 = PWM Generator 3 current-limit trigger
11001 = PWM Generator 2 current-limit trigger
11000 = PWM Generator 1 current-limit trigger
10111 = Reserved
10110 = Output Compare 1 trigger
10101 = Reserved
10100 = Reserved
10011 = Reserved
10010 = Reserved
10001 = PWM Generator 3 secondary trigger
10000 = PWM Generator 2 secondary trigger
01111 = PWM Generator 1 secondary trigger
01110 = PWM secondary Special Event Trigger
01101 = Timer2 period match
01100 = Timer1 period match
01011 = Reserved
01010 = Reserved
01001 = Reserved
01000 = Reserved
00111 = PWM Generator 3 primary trigger
00110 = PWM Generator 2 primary trigger
00101 = PWM Generator 1 primary trigger
00100 = PWM Special Event Trigger
00011 = Reserved
00010 = Level software trigger
00001 = Common software trigger
00000 = No trigger is enabled

bit 7-5 **Unimplemented:** Read as ‘0’

REGISTER 19-26: ADTRIGxL AND ADTRIGxH: ADC CHANNEL TRIGGER x SELECTION REGISTERS LOW AND HIGH (x = 0 to 5) (CONTINUED)

bit 4-0 **TRGSRCx<4:0>:** Common Interrupt Enable for Corresponding Analog Inputs bits

`11111` = ADTRG31
`11110` = Reserved
`11101` = Reserved
`11100` = Reserved
`11011` = Reserved
`11010` = PWM Generator 3 current-limit trigger
`11001` = PWM Generator 2 current-limit trigger
`11000` = PWM Generator 1 current-limit trigger
`10111` = Reserved
`10110` = Output Compare 1 trigger
`10101` = Reserved
`10100` = Reserved
`10011` = Reserved
`10010` = Reserved
`10001` = PWM Generator 3 secondary trigger
`10000` = PWM Generator 2 secondary trigger
`01111` = PWM Generator 1 secondary trigger
`01110` = PWM secondary Special Event Trigger
`01101` = Timer2 period match
`01100` = Timer1 period match
`01011` = Reserved
`01010` = Reserved
`01001` = Reserved
`01000` = Reserved
`00111` = PWM Generator 3 primary trigger
`00110` = PWM Generator 2 primary trigger
`00101` = PWM Generator 1 primary trigger
`00100` = PWM Special Event Trigger
`00011` = Reserved
`00010` = Level software trigger
`00001` = Common software trigger
`00000` = No trigger is enabled

© 2013-2015 Microchip Technology Inc.

REGISTER 19-27: ADCAL0L: ADC CALIBRATION REGISTER 0 LOW

R-0, HSC	U-0	U-0	U-0	R/W-0	R/W-0	R/W-0	R/W-0
CAL1RDY	—	—	—	CAL1SKIP	CAL1DIFF	CAL1EN	CAL1RUN
bit 15							bit 8

R-0, HSC	U-0	U-0	U-0	R/W-0	R/W-0	R/W-0	R/W-0
CAL0RDY	—	—	—	CAL0SKIP	CAL0DIFF	CAL0EN	CAL0RUN
bit 7							bit 0

Legend:	U = Unimplemented bit, read as ‘0’		
R = Readable bit	W = Writable bit	HSC = Hardware Settable/Clearable bit	
-n = Value at POR	‘1’ = Bit is set	‘0’ = Bit is cleared	x = Bit is unknown

bit 15 **CAL1RDY:** Dedicated ADC Core 1 Calibration Status Flag bit
1 = Dedicated ADC Core 1 calibration is finished
0 = Dedicated ADC Core 1 calibration is in progress

bit 14-12 **Unimplemented:** Read as ‘0’

bit 11 **CAL1SKIP:** Dedicated ADC Core 1 Calibration Bypass bit
1 = After power-up, the dedicated ADC Core 1 will not be calibrated
0 = After power-up, the dedicated ADC Core 1 will be calibrated

bit 10 **CAL1DIFF:** Dedicated ADC Core 1 Differential-Mode Calibration bit
1 = Dedicated ADC Core 1 will be calibrated in Differential Input mode
0 = Dedicated ADC Core 1 will be calibrated in Single-Ended Input mode

bit 9 **CAL1EN:** Dedicated ADC Core 1 Calibration Enable bit
1 = Dedicated ADC Core 1 calibration bits (CALxRDY, CALxSKIP, CALxDIFF and CALxRUN) can be accessed by software
0 = Dedicated ADC Core 1 calibration bits are disabled

bit 8 **CAL1RUN:** Dedicated ADC Core 1 Calibration Start bit
1 = If this bit is set by software, the dedicated ADC Core 1 calibration cycle is started; this bit is automatically cleared by hardware
0 = Software can start the next calibration cycle

bit 7 **CAL0RDY:** Dedicated ADC Core 0 Calibration Status Flag bit
1 = Dedicated ADC Core 0 calibration is finished
0 = Dedicated ADC Core 0 calibration is in progress

bit 6-4 **Unimplemented:** Read as ‘0’

bit 3 **CAL0SKIP:** Dedicated ADC Core 0 Calibration Bypass bit
1 = After power-up, the dedicated ADC Core 0 will not be calibrated
0 = After power-up, the dedicated ADC Core 0 will be calibrated

bit 2 **CAL0DIFF:** Dedicated ADC Core 0 Differential-Mode Calibration bit
1 = Dedicated ADC Core 0 will be calibrated in Differential Input mode
0 = Dedicated ADC Core 0 will be calibrated in Single-Ended Input mode

bit 1 **CAL0EN:** Dedicated ADC Core 0 Calibration Enable bit
1 = Dedicated ADC Core 0 calibration bits (CALxRDY, CALxSKIP, CALxDIFF and CALxRUN) can be accessed by software
0 = Dedicated ADC Core 0 calibration bits are disabled

bit 0 **CAL0RUN:** Dedicated ADC Core 0 Calibration Start bit
1 = If this bit is set by software, the dedicated ADC Core 0 calibration cycle is started; this bit is automatically cleared by hardware
0 = Software can start the next calibration cycle

REGISTER 19-28: ADCAL0H: ADC CALIBRATION REGISTER 0 HIGH

R-0, HSC	U-0	U-0	U-0	R/W-0	R/W-0	R/W-0	R/W-0
CAL3RDY	—	—	—	CAL3SKIP	CAL3DIFF	CAL3EN	CAL3RUN
bit 15							bit 8

R-0, HSC	U-0	U-0	U-0	R/W-0	R/W-0	R/W-0	R/W-0
CAL2RDY	—	—	—	CAL2SKIP	CAL2DIFF	CAL2EN	CAL2RUN
bit 7							bit 0

Legend:	U = Unimplemented bit, read as ‘0’		
R = Readable bit	W = Writable bit	HSC = Hardware Settable/Clearable bit	
-n = Value at POR	‘1’ = Bit is set	‘0’ = Bit is cleared	x = Bit is unknown

bit 15 **CAL3RDY:** Dedicated ADC Core 3 Calibration Status Flag bit
1 = Dedicated ADC Core 3 calibration is finished
0 = Dedicated ADC Core 3 calibration is in progress

bit 14-12 **Unimplemented:** Read as ‘0’

bit 11 **CAL3SKIP:** Dedicated ADC Core 3 Calibration Bypass bit
1 = After power-up, the dedicated ADC Core 3 will not be calibrated
0 = After power-up, the dedicated ADC Core 3 will be calibrated

bit 10 **CAL3DIFF:** Dedicated ADC Core 3 Differential-Mode Calibration bit
1 = Dedicated ADC Core 3 will be calibrated in Differential Input mode
0 = Dedicated ADC Core 3 will be calibrated in Single-Ended Input mode

bit 9 **CAL3EN:** Dedicated ADC Core 3 Calibration Enable bit
1 = Dedicated ADC Core 3 calibration bits (CALxRDY, CALxSKIP, CALxDIFF and CALxRUN) can be accessed by software
0 = Dedicated ADC Core 3 calibration bits are disabled

bit 8 **CAL3RUN:** Dedicated ADC Core 3 Calibration Start bit
1 = If this bit is set by software, the dedicated ADC Core 3 calibration cycle is started; this bit is automatically cleared by hardware
0 = Software can start the next calibration cycle

bit 7 **CAL2RDY:** Dedicated ADC Core 2 Calibration Status Flag bit
1 = Dedicated ADC Core 2 calibration is finished
0 = Dedicated ADC Core 2 calibration is in progress

bit 6-4 **Unimplemented:** Read as ‘0’

bit 3 **CAL2SKIP:** Dedicated ADC Core 2 Calibration Bypass bit
1 = After power-up, the dedicated ADC Core 2 will not be calibrated
0 = After power-up, the dedicated ADC Core 2 will be calibrated

bit 2 **CAL2DIFF:** Dedicated ADC Core 2 Differential-Mode Calibration bit
1 = Dedicated ADC Core 2 will be calibrated in Differential Input mode
0 = Dedicated ADC Core 2 will be calibrated in Single-Ended Input mode

bit 1 **CAL2EN:** Dedicated ADC Core 2 Calibration Enable bit
1 = Dedicated ADC Core 2 calibration bits (CALxRDY, CALxSKIP, CALxDIFF and CALxRUN) can be accessed by software
0 = Dedicated ADC Core 2 calibration bits are disabled

bit 0 **CAL2RUN:** Dedicated ADC Core 2 Calibration Start bit
1 = If this bit is set by software, the dedicated ADC Core 2 calibration cycle is started; this bit is automatically cleared by hardware
0 = Software can start the next calibration cycle

© 2013-2015 Microchip Technology Inc.

REGISTER 19-29: ADCAL1H: ADC CALIBRATION REGISTER 1 HIGH

R/W-0, HS	U-0	U-0	U-0	R/W-0	R/W-0	R/W-0	R/W-0
CSHRRDY	—	—	—	CSHRSKIP	CSHRDIFF	CSHREN	CSHRRUN
bit 15							bit 8

U-0	U-0	U-0	U-0	U-0	U-0	U-0	U-0
—	—	—	—	—	—	—	—
bit 7							bit 0

Legend:	HS = Hardware Settable bit		
R = Readable bit	W = Writable bit	U = Unimplemented bit, read as ‘0’	
-n = Value at POR	‘1’ = Bit is set	‘0’ = Bit is cleared	x = Bit is unknown

bit 15 **CSHRRDY:** Shared ADC Core Calibration Status Flag bit
1 = Shared ADC core calibration is finished
0 = Shared ADC core calibration is in progress

bit 14-12 **Unimplemented:** Read as ‘0’

bit 11 **CSHRSKIP:** Shared ADC Core Calibration Bypass bit
1 = After power-up, the shared ADC core will not be calibrated
0 = After power-up, the shared ADC core will be calibrated

bit 10 **CSHRDIFF:** Shared ADC Core Differential-Mode Calibration bit
1 = Shared ADC core will be calibrated in Differential Input mode
0 = Shared ADC core will be calibrated in Single-Ended Input mode

bit 9 **CSHREN:** Shared ADC Core Calibration Enable bit
1 = Shared ADC core calibration bits (CSHRRDY, CSHRSKIP, CSHRDIFF and CSHRRUN) can be accessed by software
0 = Shared ADC core calibration bits are disabled

bit 8 **CSHRRUN:** Shared ADC Core Calibration Start bit
1 = If this bit is set by software, the shared ADC core calibration cycle is started; this bit is cleared automatically by hardware
0 = Software can start the next calibration cycle

bit 7-0 **Unimplemented:** Read as ‘0’

REGISTER 19-30: ADCMPxCON: ADC DIGITAL COMPARATOR x CONTROL REGISTER (x = 0 or 1)

U-0	U-0	U-0	R-0, HSC	R-0, HSC	R-0, HSC	R-0, HSC	R-0, HSC
—	—	—	CHNL4	CHNL3	CHNL2	CHNL1	CHNL0
bit 15							bit 8

R/W-0	R/W-0	R-0, HC, HS	R/W-0	R/W-0	R/W-0	R/W-0	R/W-0
CMPEN	IE	STAT	BTWN	HIHI	HILO	LOHI	LOLO
bit 7							bit 0

Legend:	HC = Hardware Clearable bit	U = Unimplemented bit, read as ‘0’	
R = Readable bit	W = Writable bit	HSC = Hardware Settable/Clearable bit	
-n = Value at POR	‘1’ = Bit is set	‘0’ = Bit is cleared	HS = Hardware Settable bit

bit 15-13 **Unimplemented:** Read as ‘0’

bit 12-8 **CHNL<4:0>:** Input Channel Number bits

If the comparator has detected an event for a channel, this channel number is written to these bits.
11111 = Reserved
•
•
10110 = Reserved
10101 = AN21
10100 = AN20
•
•
00001 = AN1
00000 = AN0

bit 7 **CMPEN:** Comparator Enable bit

1 = Comparator is enabled
0 = Comparator is disabled and the STAT status bit is cleared

bit 6 **IE:** Comparator Common ADC Interrupt Enable bit

1 = Common ADC interrupt will be generated if the comparator detects a comparison event
0 = Common ADC interrupt will not be generated for the comparator

bit 5 **STAT:** Comparator Event Status bit

This bit is cleared by hardware when the channel number is read from the CHNL<4:0> bits.
1 = A comparison event has been detected since the last read of the CHNL<4:0> bits
0 = A comparison event has not been detected since the last read of the CHNL<4:0> bits

bit 4 **BTWN:** Between Low/High Comparator Event bit

1 = Generates a comparator event when ADCMPxLO ≤ ADCBUFx < ADCMPxHI
0 = Does not generate a digital comparator event when ADCMPxLO ≤ ADCBUFx < ADCMPxHI

bit 3 **HIHI:** High/High Comparator Event bit

1 = Generates a digital comparator event when ADCBUFx ≥ ADCMPxHI
0 = Does not generate a digital comparator event when ADCBUFx ≥ ADCMPxHI

bit 2 **HILO:** High/Low Comparator Event bit

1 = Generates a digital comparator event when ADCBUFx < ADCMPxHI
0 = Does not generate a digital comparator event when ADCBUFx < ADCMPxHI

bit 1 **LOHI:** Low/High Comparator Event bit

1 = Generates a digital comparator event when ADCBUFx ≥ ADCMPxLO
0 = Does not generate a digital comparator event when ADCBUFx ≥ ADCMPxLO

bit 0 **LOLO:** Low/Low Comparator Event bit

1 = Generates a digital comparator event when ADCBUFx < ADCMPxLO
0 = Does not generate a digital comparator event when ADCBUFx < ADCMPxLO

© 2013-2015 Microchip Technology Inc.

REGISTER 19-31: ADCMPxENL: ADC DIGITAL COMPARATOR x CHANNEL ENABLE REGISTER LOW (x = 0 or 1)

R/W-0	R/W-0	R/W-0	R/W-0	R/W-0	R/W-0	R/W-0	R/W-0
CMPEN<15:8>							
bit 15							bit 8

R/W/0	R/W-0	R/W-0	R/W-0	R/W-0	R/W-0	R/W-0	R/W-0
CMPEN<7:0>							
bit 7							bit 0

Legend:			
R = Readable bit	W = Writable bit	U = Unimplemented bit, read as ‘0’	
-n = Value at POR	‘1’ = Bit is set	‘0’ = Bit is cleared	x = Bit is unknown

bit 15-0 **CMPEN<15:0>:** Comparator Enable for Corresponding Input Channels bits
1 = Conversion result for corresponding channel is used by the comparator
0 = Conversion result for corresponding channel is not used by the comparator

REGISTER 19-32: ADCMPxENH: ADC DIGITAL COMPARATOR x CHANNEL ENABLE REGISTER HIGH (x = 0 or 1)

U-0	U-0	U-0	U-0	U-0	U-0	U-0	R/W-0
—	—	—	—	—	—	—	—
bit 15							bit 8

U-0	U-0	R/W-0	R/W-0	R/W-0	R/W-0	R/W-0	R/W-0
—	—	CMPEN<21:16>					
bit 7							bit 0

Legend:			
R = Readable bit	W = Writable bit	U = Unimplemented bit, read as ‘0’	
-n = Value at POR	‘1’ = Bit is set	‘0’ = Bit is cleared	x = Bit is unknown

bit 15-6 **Unimplemented:** Read as ‘0’

bit 5-0 **CMPEN<21:16>:** Comparator Enable for Corresponding Input Channels bits
1 = Conversion result for corresponding channel is used by the comparator
0 = Conversion result for corresponding channel is not used by the comparator

REGISTER 19-33: ADFLxCON: ADC DIGITAL FILTER x CONTROL REGISTER (x = 0 or 1)

R/W-0	R/W-0	R/W-0	R/W-0	R/W-0	R/W-0	R/W-0	R-0, HSC
FLEN	MODE1	MODE0	OVRSAM2	OVRSAM1	OVRSAM0	IE	RDY
bit 15							bit 8

U-0	U-0	U-0	R/W-0	R/W-0	R/W-0	R/W-0	R/W-0
—	—	—	FLCHSEL4	FLCHSEL3	FLCHSEL2	FLCHSEL1	FLCHSEL0
bit 7							bit 0

Legend:	U = Unimplemented bit, read as ‘0’		
R = Readable bit	W = Writable bit	HSC = Hardware Settable/Clearable bit	
-n = Value at POR	‘1’ = Bit is set	‘0’ = Bit is cleared	x = Bit is unknown

bit 15 **FLEN:** Filter Enable bit
1 = Filter is enabled
0 = Filter is disabled and the RDY bit is cleared

bit 14-13 **MODE<1:0>:** Filter Mode bits
11 = Averaging mode
10 = Reserved
01 = Reserved
00 = Oversampling mode

bit 12-10 **OVRSAM<2:0>:** Filter Averaging/Oversampling Ratio bits
If MODE<1:0> = 00:
111 = 128x (16-bit result in the ADFLxDAT register is in 12.4 format)
110 = 32x (15-bit result in the ADFLxDAT register is in 12.3 format)
101 = 8x (14-bit result in the ADFLxDAT register is in 12.2 format)
100 = 2x (13-bit result in the ADFLxDAT register is in 12.1 format)
011 = 256x (16-bit result in the ADFLxDAT register is in 12.4 format)
010 = 64x (15-bit result in the ADFLxDAT register is in 12.3 format)
001 = 16x (14-bit result in the ADFLxDAT register is in 12.2 format)
000 = 4x (13-bit result in the ADFLxDAT register is in 12.1 format)
If MODE<1:0> = 11 (12-bit result in the ADFLxDAT register in all instances):
111 = 256x
110 = 128x
101 = 64x
100 = 32x
011 = 16x
110 = 8x
001 = 4x
000 = 2x

bit 9 **IE:** Filter Common ADC Interrupt Enable bit
1 = Common ADC interrupt will be generated when the filter result will be ready
0 = Common ADC interrupt will not be generated for the filter

bit 8 **RDY:** Oversampling Filter Data Ready Flag bit
This bit is cleared by hardware when the result is read from the ADFLxDAT register.
1 = Data in the ADFLxDAT register is ready
0 = The ADFLxDAT register has been read and new data in the ADFLxDAT register is not ready

bit 7-5 **Unimplemented:** Read as ‘0’

© 2013-2015 Microchip Technology Inc.

REGISTER 19-33: ADFLxCON: ADC DIGITAL FILTER x CONTROL REGISTER (x = 0 or 1) (CONTINUED)

bit 4-0 **FLCHSEL<4:0>:** Oversampling Filter Input Channel Selection bits

`11111` = Reserved
•
•
•
`10110` = Reserved
`10101` = AN21
`10100` = AN20
•
•
•
`00001` = AN1
`00000` = AN0

NOTES:

© 2013-2015 Microchip Technology Inc.

20.0 HIGH-SPEED ANALOG COMPARATOR

Note 1: This data sheet summarizes the features of the dsPIC33EPXXGS50X family of devices. It is not intended to be a comprehensive reference source. To complement the information in this data sheet, refer to **"High-Speed Analog Comparator Module"** (DS70005128) in the *"dsPIC33/PIC24 Family Reference Manual"*, which is available from the Microchip web site (www.microchip.com).

2: Some registers and associated bits described in this section may not be available on all devices. Refer to **Section 4.0 "Memory Organization"** in this data sheet for device-specific register and bit information.

The high-speed analog comparator module monitors current and/or voltage transients that may be too fast for the CPU and ADC to capture.

20.1 Features Overview

The SMPS comparator module offers the following major features:

- Four Rail-to-Rail Analog Comparators
- Dedicated 12-Bit DAC for each Analog Comparator
- Up to Six Selectable Input Sources per Comparator:
  - Four external inputs
  - Two internal inputs from the PGAx module
- Programmable Comparator Hysteresis
- Programmable Output Polarity
- Up to Two DAC Outputs to Device Pins
- Multiple Voltage References for the DAC:
  - External References (EXTREF1 or EXTREF2)
  - AVDD
- Interrupt Generation Capability
- Functional Support for PWMx:
  - PWMx duty cycle control
  - PWMx period control
  - PWMx Fault detected

20.2 Module Description

Figure 20-1 shows a functional block diagram of one analog comparator from the high-speed analog comparator module. The analog comparator provides high-speed operation with a typical delay of 15 ns. The negative input of the comparator is always connected to the DACx circuit. The positive input of the comparator is connected to an analog multiplexer that selects the desired source pin.

The analog comparator input pins are typically shared with pins used by the Analog-to-Digital Converter (ADC) module. Both the comparator and the ADC can use the same pins at the same time. This capability enables a user to measure an input voltage with the ADC and detect voltage transients with the comparator.

FIGURE 20-1: HIGH-SPEED ANALOG COMPARATOR x MODULE BLOCK DIAGRAM

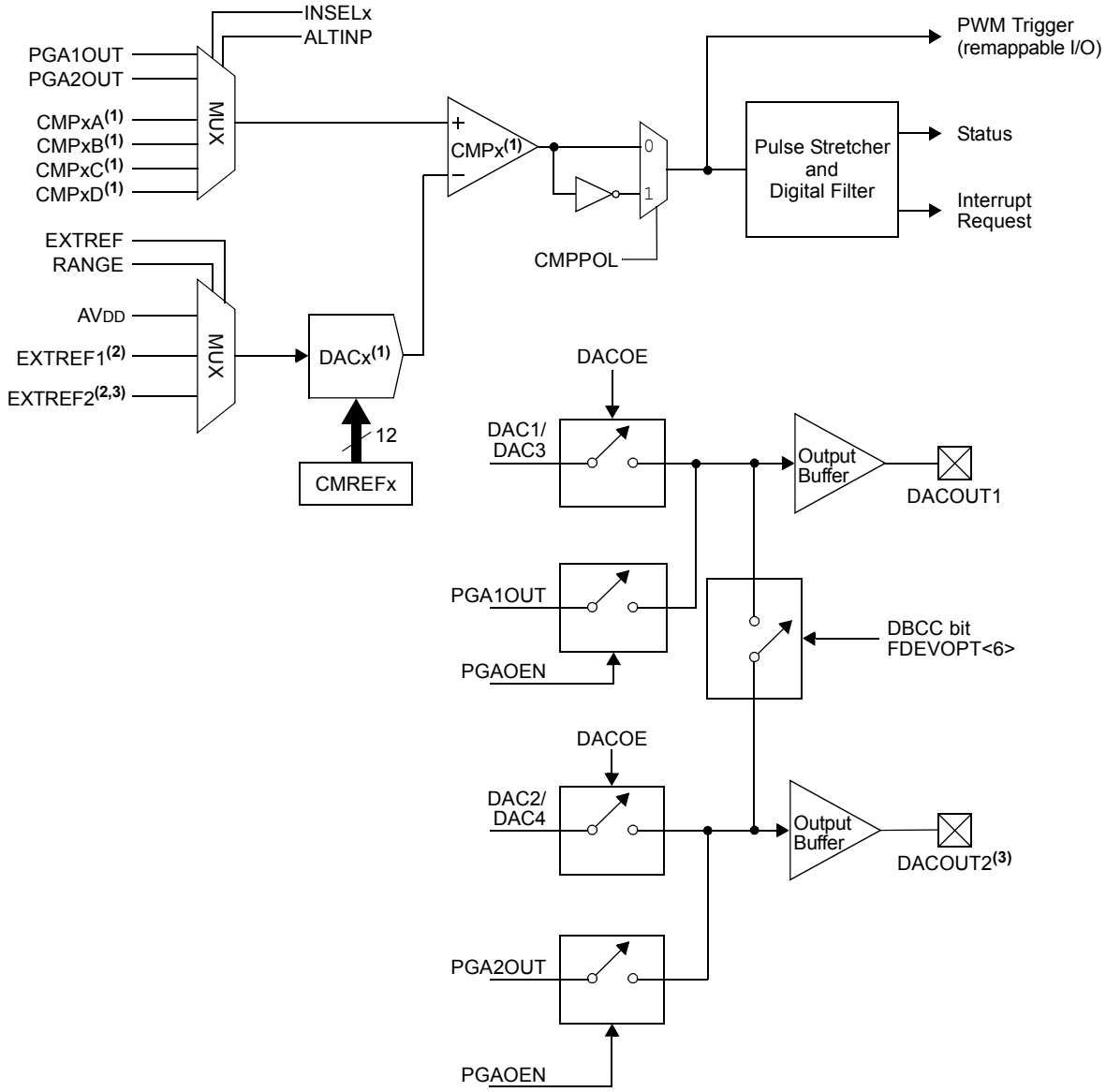

Note 1: x = 1-4
2: EXTREF1 is connected to DAC1/DAC3. EXTREF2 is connected to DAC2/DAC4.
3: Not available on all devices.

© 2013-2015 Microchip Technology Inc.

20.3 Module Applications

This module provides a means for the SMPS dsPIC® DSC devices to monitor voltage and currents in a power conversion application. The ability to detect transient conditions and stimulate the dsPIC DSC processor and/or peripherals, without requiring the processor and ADC to constantly monitor voltages or currents, frees the dsPIC DSC to perform other tasks.

The comparator module has a high-speed comparator and an associated 12-bit DAC that provides a programmable reference voltage to the inverting input of the comparator. The polarity of the comparator output is user-programmable. The output of the module can be used in the following modes:

- Generate an Interrupt
- Trigger an ADC Sample and Convert Process
- Truncate the PWMx Signal (current limit)
- Truncate the PWMx Period (current minimum)
- Disable the PWMx Outputs (Fault latch)

The output of the comparator module may be used in multiple modes at the same time, such as: 1) generate an interrupt, 2) have the ADC take a sample and convert it, and 3) truncate the PWMx output in response to a voltage being detected beyond its expected value.

The comparator module can also be used to wake-up the system from Sleep or Idle mode when the analog input voltage exceeds the programmed threshold voltage.

20.4 Digital-to-Analog Comparator (DAC)

Each analog comparator has a dedicated 12-bit DAC that is used to program the comparator threshold voltage via the CMPxDAC register. The DAC voltage reference source is selected using the EXTREF and RANGE bits in the CMPxCON register.

The EXTREF bit selects either the external voltage reference, EXTREFx, or an internal source as the voltage reference source. The EXTREFx input enables users to connect to a voltage reference that better suits their application. The RANGE bit enables AV_{DD} as the voltage reference source for the DAC when an internal voltage reference is selected.

Note: EXTREF2 is not available on all devices.

Each DACx has an output enable bit, DACOE, in the CMPxCON register that enables the DACx reference voltage to be routed to an external output pin (DACOUTx). Refer to Figure 20-1 for connecting the DACx output voltage to the DACOUTx pins.

Note 1: Ensure that multiple DACOE bits are not set in software. The output on the DACOUTx pin will be indeterminate if multiple comparators enable the DACx output.

2: DACOUT2 is not available on all devices.

20.5 Pulse Stretcher and Digital Logic

The analog comparator can respond to very fast transient signals. After the comparator output is given the desired polarity, the signal is passed to a pulse stretching circuit. The pulse stretching circuit has an asynchronous set function and a delay circuit that ensures the minimum pulse width is three system clock cycles wide to allow the attached circuitry to properly respond to a narrow pulse event.

The pulse stretcher circuit is followed by a digital filter. The digital filter is enabled via the FLTREN bit in the CMPxCON register. The digital filter operates with the clock specified via the FCLKSEL bit in the CMPxCON register. The comparator signal must be stable in a high or low state, for at least three of the selected clock cycles, for it to pass through the digital filter.

20.6 Hysteresis

An additional feature of the module is hysteresis control. Hysteresis can be enabled or disabled and its amplitude can be controlled by the HYSSEL<1:0> bits in the CMPxCON register. Three different values are available: 15 mV, 30 mV and 45 mV. It is also possible to select the edge (rising or falling) to which hysteresis is to be applied.

Hysteresis control prevents the comparator output from continuously changing state because of small perturbations (noise) at the input (see Figure 20-2).

FIGURE 20-2: HYSTERESIS CONTROL

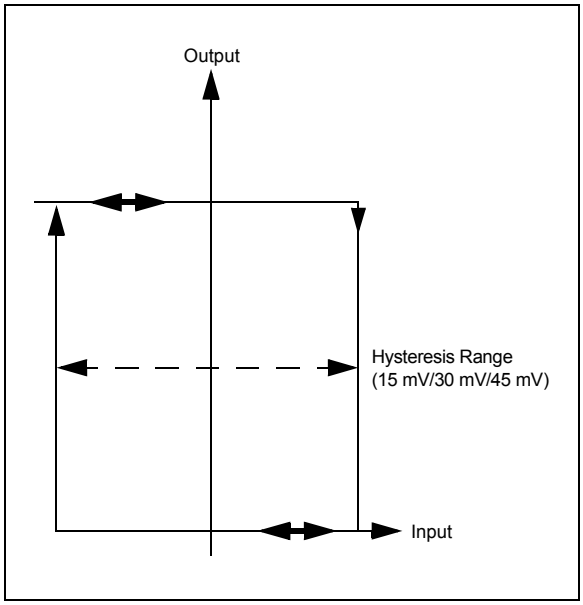

20.7 Analog Comparator Resources

Many useful resources are provided on the main product page of the Microchip web site for the devices listed in this data sheet. This product page contains the latest updates and additional information.

20.7.1 KEY RESOURCES

- Code Samples
- Application Notes
- Software Libraries
- Webinars
- All Related *"dsPIC33/PIC24 Family Reference Manual"* Sections
- Development Tools

© 2013-2015 Microchip Technology Inc.

REGISTER 20-1: CMPxCON: COMPARATOR x CONTROL REGISTER

R/W-0	U-0	R/W-0	R/W-0	R/W-0	R/W-0	R/W-0	R/W-0
CMPON	—	CMPSIDL	HYSSEL1	HYSSEL0	FLTREN	FCLKSEL	DACOE
bit 15							bit 8

R/W-0	R/W-0	R/W-0	R/W-0	HC-0, HS	R/W-0	R/W-0	R/W-0
INSEL1	INSEL0	EXTREF	HYSPOL	CMPSTAT	ALTINP	CMPPOL	RANGE
bit 7							bit 0

Legend:	HC = Hardware Clearable bit	HS = Hardware Settable bit	
R = Readable bit	W = Writable bit	U = Unimplemented bit, read as ‘0’	
-n = Value at POR	‘1’ = Bit is set	‘0’ = Bit is cleared	x = Bit is unknown

bit 15 **CMPON:** Comparator Operating Mode bit
1 = Comparator module is enabled
0 = Comparator module is disabled (reduces power consumption)

bit 14 **Unimplemented:** Read as ‘0’

bit 13 **CMPSIDL:** Comparator Stop in Idle Mode bit
1 = Discontinues module operation when device enters Idle mode.
0 = Continues module operation in Idle mode
If a device has multiple comparators, any CMPSIDL bit set to ‘1’ disables all comparators while in Idle mode.

bit 12-11 **HYSSEL<1:0>:** Comparator Hysteresis Select bits
11 = 20 mV hysteresis
10 = 10 mV hysteresis
01 = 5 mV hysteresis
00 = No hysteresis is selected

bit 10 **FLTREN:** Digital Filter Enable bit
1 = Digital filter is enabled
0 = Digital filter is disabled

bit 9 **FCLKSEL:** Digital Filter and Pulse Stretcher Clock Select bit
1 = Digital filter and pulse stretcher operate with the PWM clock
0 = Digital filter and pulse stretcher operate with the system clock

bit 8 **DACOE:** DACx Output Enable bit
1 = DACx analog voltage is connected to the DACOUTx pin(1)
0 = DACx analog voltage is not connected to the DACOUTx pin

bit 7-6 **INSEL<1:0>:** Input Source Select for Comparator bits
<u>If ALTINP = 0, Select from Comparator Inputs:</u>
11 = Selects CMPxD input pin
10 = Selects CMPxC input pin
01 = Selects CMPxB input pin
00 = Selects CMPxA input pin
<u>If ALTINP = 1, Select from Alternate Inputs:</u>
11 = Reserved
10 = Reserved
01 = Selects PGA2 output
00 = Selects PGA1 output

Note 1: DACOUTx can be associated only with a single comparator at any given time. The software must ensure that multiple comparators do not enable the DACx output by setting their respective DACOE bit.

REGISTER 20-1: CMPxCON: COMPARATOR x CONTROL REGISTER (CONTINUED)

bit 5 **EXTREF:** Enable External Reference bit
1 = External source provides reference to DACx (maximum DAC voltage is determined by the external voltage source)
0 = AVDD provides reference to DACx (maximum DAC voltage is AVDD)

bit 4 **HYSPOL:** Comparator Hysteresis Polarity Select bit
1 = Hysteresis is applied to the falling edge of the comparator output
0 = Hysteresis is applied to the rising edge of the comparator output

bit 3 **CMPSTAT:** Comparator Current State bit
Reflects the current output state of Comparator x, including the setting of the CMPPOL bit.

bit 2 **ALTINP:** Alternate Input Select bit
1 = INSEL<1:0> bits select alternate inputs
0 = INSEL<1:0> bits select comparator inputs

bit 1 **CMPPOL:** Comparator Output Polarity Control bit
1 = Output is inverted
0 = Output is non-inverted

bit 0 **RANGE:** DACx Output Voltage Range Select bit
1 = AVDD is the maximum DACx output voltage
0 = Unimplemented, do not use

Note 1: DACOUTx can be associated only with a single comparator at any given time. The software must ensure that multiple comparators do not enable the DACx output by setting their respective DACOE bit.

© 2013-2015 Microchip Technology Inc.

REGISTER 20-2: CMPxDAC: COMPARATOR x DAC CONTROL REGISTER

U-0	U-0	U-0	U-0	R/W-0	R/W-0	R/W-0	R/W-0
—	—	—	—	CMREF<11:8>			
bit 15							bit 8

R/W-0	R/W-0	R/W-0	R/W-0	R/W-0	R/W-0	R/W-0	R/W-0
CMREF<7:0>							
bit 7							bit 0

Legend:			
R = Readable bit	W = Writable bit	U = Unimplemented bit, read as ‘0’	
-n = Value at POR	‘1’ = Bit is set	‘0’ = Bit is cleared	x = Bit is unknown

bit 15-12 **Unimplemented:** Read as ‘0’

bit 11-0 **CMREF<11:0>:** Comparator Reference Voltage Select bits

111111111111
•
•
• = ([CMREF<11:0>] * (AVDD)/4096) volts (EXTREF = 0)
• or ([CMREF<11:0>] * (EXTREF)/4096) volts (EXTREF = 1)
•
•
000000000000

NOTES:

© 2013-2015 Microchip Technology Inc.

21.0 PROGRAMMABLE GAIN AMPLIFIER (PGA)

Note 1: This data sheet summarizes the features of the dsPIC33EPXXGS50X family of devices. It is not intended to be a comprehensive reference source. To complement the information in this data sheet, refer to **"Programmable Gain Amplifier (PGA)"** (DS70005146) in the *"dsPIC33/PIC24 Family Reference Manual"*, which is available from the Microchip web site (www.microchip.com).

2: Some registers and associated bits described in this section may not be available on all devices. Refer to **Section 4.0 "Memory Organization"** in this data sheet for device-specific register and bit information.

The dsPIC33EPXXGS50X family devices have two Programmable Gain Amplifiers (PGA1, PGA2). The PGA is an op amp-based, non-inverting amplifier with user-programmable gains. The output of the PGA can be connected to a number of dedicated Sample-and-Hold inputs of the Analog-to-Digital Converter and/or to the high-speed analog comparator module. The PGA has five selectable gains and may be used as a ground referenced amplifier (single-ended) or used with an independent ground reference point.

Key features of the PGA module include:

- Single-ended or independent ground reference
- Selectable gains: 4x, 8x, 16x, 32x and 64x
- High Gain Bandwidth
- Rail-to-rail output voltage
- Wide input voltage range

FIGURE 21-1: PGAx MODULE BLOCK DIAGRAM

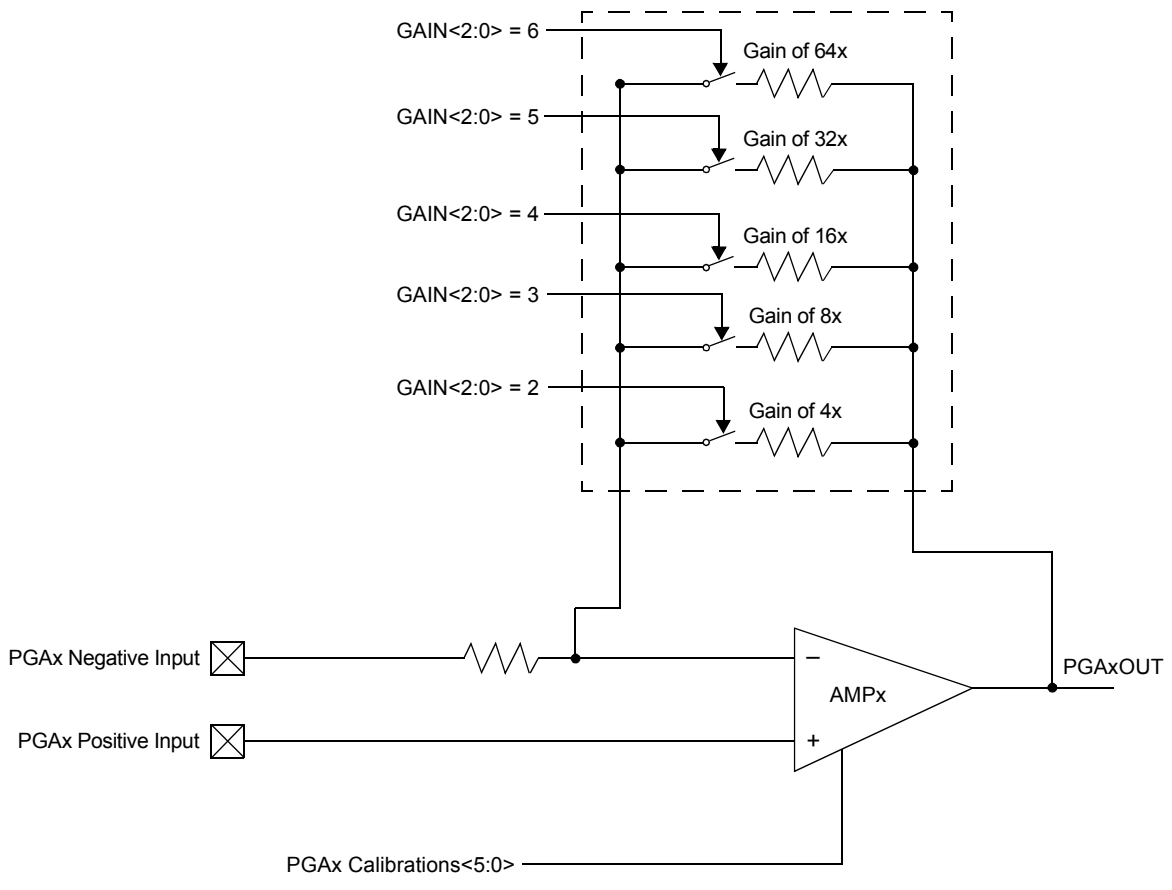

Note 1: x = 1 and 2.

21.1 Module Description

The Programmable Gain Amplifiers are used to amplify small voltages (i.e., voltages across burden/shunt resistors) to improve the signal-to-noise ratio of the measured signal. The PGAx output voltage can be read by any of the four dedicated Sample-and-Hold circuits on the ADC module. The output voltage can also be fed to the comparator module for overcurrent/voltage protection. Figure 21-2 shows a functional block diagram of the PGAx module. Refer to **Section 19.0 "High-Speed, 12-Bit Analog-to-Digital Converter (ADC)"** and **Section 20.0 "High-Speed Analog Comparator"** for more interconnection details.

The gain of the PGAx module is selectable via the GAIN<2:0> bits in the PGAxCON register. There are five selectable gains, ranging from 4x to 64x. The SELPI<2:0> and SELNI<2:0> bits in the PGAxCON register select one of four positive/negative inputs to the PGAx module. For single-ended applications, the SELNI<2:0> bits will select the ground as the negative input source. To provide an independent ground reference, PGAxN2 and PGAxN3 pins are available as the negative input source to the PGAx module.

> **Note 1:** Not all PGA positive/negative inputs are available on all devices. Refer to the specific device pinout for available input source pins.

The output voltage of the PGAx module can be connected to the DACOUTx pin by setting the PGAOEN bit in the PGAxCON register. When the PGAOEN bit is enabled, the output voltage of PGA1 is connected to DACOUT1 and PGA2 is connected to DACOUT2. For devices with a single DACOUTx pin, the output voltage of PGA2 can be connected to DACOUT1 by configuring the DBCC Configuration bit in the FDEVOPT register (FDEVOPT<6>).

If both the DACx output voltage and PGAx output voltage are connected to the DACOUTx pin, the resulting output voltage would be a combination of signals. There is no assigned priority between the PGAx module and the DACx module.

FIGURE 21-2: PGAx FUNCTIONAL BLOCK DIAGRAM

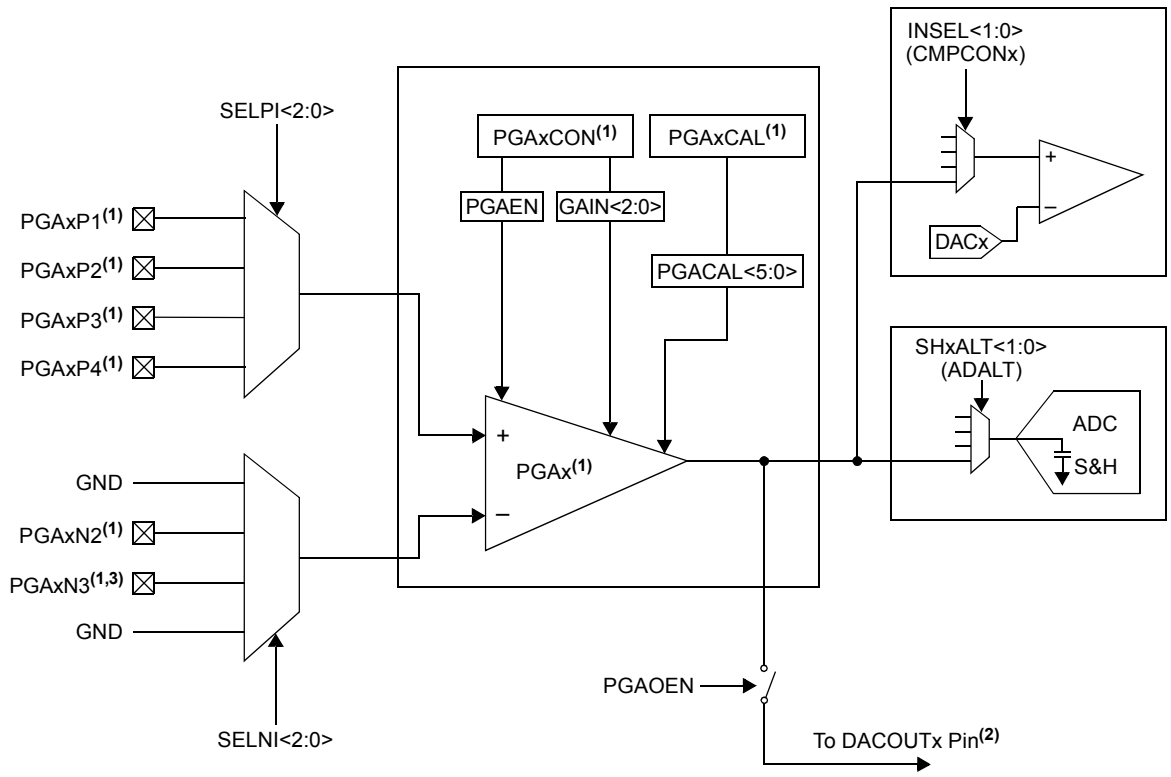

Note 1: x = 1 and 2.
2: The DACOUT2 device pin is only available on 64-pin devices.
3: The PGAxN3 input is not available on 28-pin devices.

© 2013-2015 Microchip Technology Inc.

21.2 PGA Resources

Many useful resources are provided on the main product page of the Microchip website for the devices listed in this data sheet. This product page contains the latest updates and additional information.

21.2.1 KEY RESOURCES

- Code Samples
- Application Notes
- Software Libraries
- Webinars
- All Related *"dsPIC33/PIC24 Family Reference Manual"* Sections
- Development Tools

REGISTER 21-1: PGAxCON: PGAx CONTROL REGISTER

R/W-0	R/W-0	R/W-0	R/W-0	R/W-0	R/W-0	R/W-0	R/W-0
PGAEN	PGAOEN	SELPI2	SELPI1	SELPI0	SELNI2	SELNI1	SELNI0
bit 15							bit 8

U-0	U-0	U-0	U-0	U-0	R/W-0	R/W-0	R/W-0
—	—	—	—	—	GAIN2	GAIN1	GAIN0
bit 7							bit 0

Legend:			
R = Readable bit	W = Writable bit	U = Unimplemented bit, read as '0'	
-n = Value at POR	'1' = Bit is set	'0' = Bit is cleared	x = Bit is unknown

bit 15 **PGAEN:** PGAx Enable bit
1 = PGAx module is enabled
0 = PGAx module is disabled (reduces power consumption)

bit 14 **PGAOEN:** PGAx Output Enable bit
1 = PGAx output is connected to the DACOUTx pin
0 = PGAx output is not connected to the DACOUTx pin

bit 13-11 **SELPI<2:0>:** PGAx Positive Input Selection bits
111 = Reserved
110 = Reserved
101 = Reserved
100 = Reserved
011 = PGAxP4
010 = PGAxP3
001 = PGAxP2
000 = PGAxP1

bit 10-8 **SELNI<2:0>:** PGAx Negative Input Selection bits
111 = Reserved
110 = Reserved
101 = Reserved
100 = Reserved
011 = Ground (Single-Ended mode)
010 = PGAxN3
001 = PGAxN2
000 = Ground (Single-Ended mode)

bit 7-3 **Unimplemented:** Read as '0'

REGISTER 21-1: PGAxCON: PGAx CONTROL REGISTER (CONTINUED)

bit 2-0 **GAIN<2:0>:** PGAx Gain Selection bits
111 = Reserved
110 = Gain of 64x
101 = Gain of 32x
100 = Gain of 16x
011 = Gain of 8x
010 = Gain of 4x
001 = Reserved
000 = Reserved

REGISTER 21-2: PGAxCAL: PGAx CALIBRATION REGISTER

U-0	U-0	U-0	U-0	U-0	U-0	U-0	U-0
—	—	—	—	—	—	—	—
bit 15							bit 8

U-0	U-0	R/W-0	R/W-0	R/W-0	R/W-0	R/W-0	R/W-0
—	—	PGACAL<5:0>					
bit 7							bit 0

Legend:			
R = Readable bit	W = Writable bit	U = Unimplemented bit, read as ‘0’	
-n = Value at POR	‘1’ = Bit is set	‘0’ = Bit is cleared	x = Bit is unknown

bit 15-6 **Unimplemented:** Read as ‘0’

bit 5-0 **PGACAL<5:0>:** PGAx Offset Calibration bits
The calibration values for PGA1 and PGA2 must be copied from Flash addresses, 0x800E48 and 0x800E4C, respectively, into these bits before the module is enabled. Refer to the calibration data address table (Table 23-3) in **Section 23.0 “Special Features”** for more information.

© 2013-2015 Microchip Technology Inc.

22.0 CONSTANT-CURRENT SOURCE

Note 1: This data sheet summarizes the features of the dsPIC33EPXXGS50X family of devices. It is not intended to be a comprehensive reference source. To complement the information in this data sheet, refer to the related section of the *"dsPIC33/PIC24 Family Reference Manual"*, which is available from the Microchip web site (www.microchip.com).

2: Some registers and associated bits described in this section may not be available on all devices. Refer to **Section 4.0 "Memory Organization"** in this data sheet for device-specific register and bit information.

The constant-current source module is a precision current generator and is used in conjunction with the ADC module to measure the resistance of external resistors connected to device pins.

22.1 Features Overview

The constant-current source module offers the following major features:

- Constant-current generator (10 µA nominal)
- Internal selectable connection to one of four pins
- Enable/disable bit

22.2 Module Description

Figure 22-1 shows a functional block diagram of the constant-current source module. It consists of a precision current generator with a nominal value of 10 µA. The module can be enabled and disabled using the ISRCEN bit in the ISRCCON register. The output of the current generator is internally connected to a device pin. The dsPIC33EPXXGS50X family can have up to 4 selectable current source pins. The OUTSEL<2:0> bits in the ISRCCON register allow selection of the target pin.

The current source is calibrated during testing.

FIGURE 22-1: CONSTANT-CURRENT SOURCE MODULE BLOCK DIAGRAM

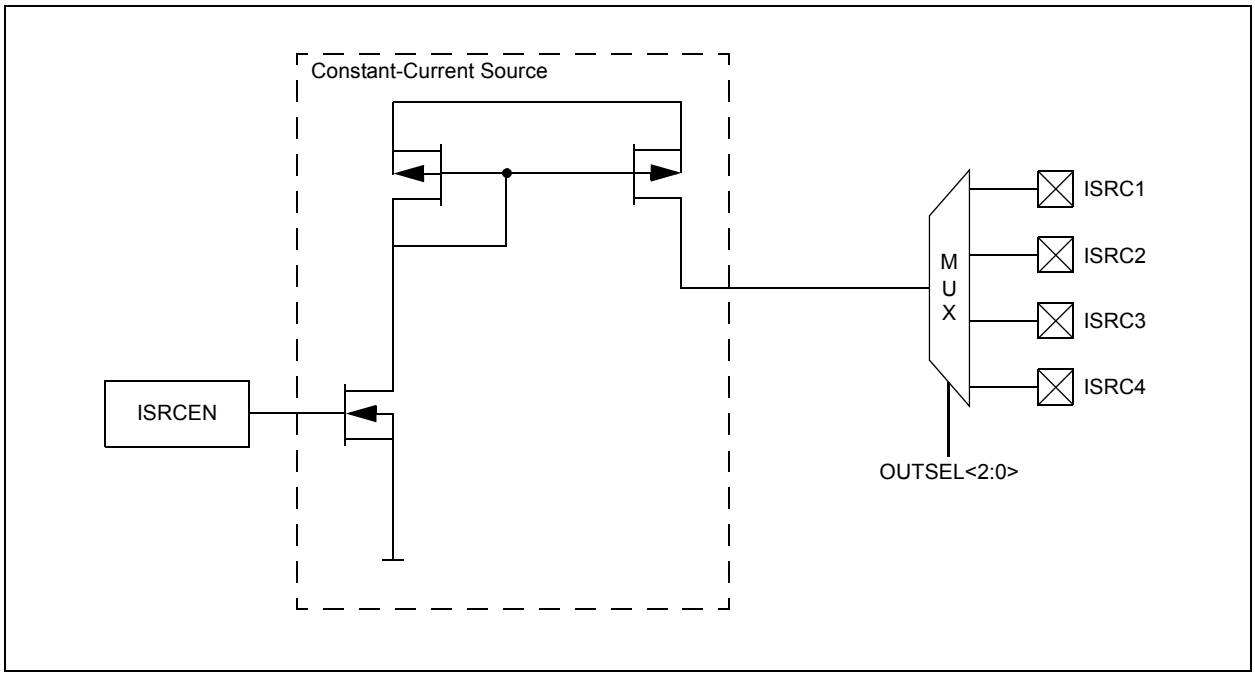

22.3 Current Source Control Register

REGISTER 22-1: ISRCCON: CONSTANT-CURRENT SOURCE CONTROL REGISTER

R/W-0	U-0	U-0	U-0	U-0	R/W-0	R/W-0	R/W-0
ISRCEN	—	—	—	—	OUTSEL2	OUTSEL1	OUTSEL0
bit 15							bit 8

U-0	U-0	R/W-0	R/W-0	R/W-0	R/W-0	R/W-0	R/W-0
—	—	ISRCCAL5	ISRCCAL4	ISRCCAL3	ISRCCAL2	ISRCCAL1	ISRCCAL0
bit 7							bit 0

Legend:			
R = Readable bit	W = Writable bit	U = Unimplemented bit, read as ‘0’	
-n = Value at POR	‘1’ = Bit is set	‘0’ = Bit is cleared	x = Bit is unknown

bit 15 **ISRCEN:** Constant-Current Source Enable bit
`1` = Current source is enabled
`0` = Current source is disabled

bit 14-11 **Unimplemented:** Read as ‘`0`’

bit 10-8 **OUTSEL<2:0>:** Output Constant-Current Select bits
`111` = Reserved
`110` = Reserved
`101` = Reserved
`100` = Input pin, ISRC4 (AN4)
`011` = Input pin, ISRC3 (AN5)
`010` = Input pin, ISRC2 (AN6)
`001` = Input pin, ISRC1 (AN12)
`000` = No output is selected

bit 7-6 **Unimplemented:** Read as ‘`0`’

bit 5-0 **ISRCCAL<5:0>:** Constant-Current Source Calibration bits
The calibration value must be copied from Flash address, 0x800E78, into these bits before the module is enabled. Refer to the calibration data address table (Table 23-3) in **Section 23.0 “Special Features”** for more information.

© 2013-2015 Microchip Technology Inc.

23.0 SPECIAL FEATURES

Note: This data sheet summarizes the features of the dsPIC33EPXXGS50X family of devices. It is not intended to be a comprehensive reference source. To complement the information in this data sheet, refer to the related section of the *"dsPIC33/PIC24 Family Reference Manual*", which is available from the Microchip web site (www.microchip.com).

The dsPIC33EPXXGS50X family devices include several features intended to maximize application flexibility and reliability, and minimize cost through elimination of external components. These are:

- Flexible Configuration
- Watchdog Timer (WDT)
- Code Protection and CodeGuard™ Security
- JTAG Boundary Scan Interface
- In-Circuit Serial Programming™ (ICSP™)
- In-Circuit Emulation
- Brown-out Reset (BOR)

23.1 Configuration Bits

In dsPIC33EPXXGS50X family devices, the Configuration Words are implemented as volatile memory. This means that configuration data must be programmed each time the device is powered up. Configuration data is stored at the end of the on-chip program memory space, known as the Flash Configuration Words. Their specific locations are shown in Table 23-1 with detailed descriptions in Table 23-2. The configuration data is automatically loaded from the Flash Configuration Words to the proper Configuration Shadow registers during device Resets.

For devices operating in Dual Partition modes, the BSEQx bits (FBTSEQ<11:0>) determine which panel is the Active Partition at start-up and the Configuration Words from that panel are loaded into the Configuration Shadow registers.

Note: Configuration data is reloaded on all types of device Resets.

When creating applications for these devices, users should always specifically allocate the location of the Flash Configuration Words for configuration data in their code for the compiler. This is to make certain that program code is not stored in this address when the code is compiled. Program code executing out of configuration space will cause a device Reset.

Note: Performing a page erase operation on the last page of program memory clears the Flash Configuration Words.

TABLE 23-1: CONFIGURATION REGISTER MAP[3]

Name	Address	Device Memory Size (Kbytes)	Bits 23-16	Bit 15	Bit 14	Bit 13	Bit 12	Bit 11	Bit 10	Bit 9	Bit 8	Bit 7	Bit 6	Bit 5	Bit 4	Bit 3	Bit 2	Bit 1	Bit 0
FSEC	002B80	16	—	AIVTDIS	—	—	—	CSS<2:0>			CWRP	GSS<1:0>		GWRP	—	BSEN	BSS<1:0>		BWRP
	005780	32																	
	00AF80	64																	
FBSLIM	002B90	16	—	—	—	—	BSLIM<12:0>												
	005790	32																	
	00AF90	64																	
FSIGN	002B94	16	—	Reserved[2]	—	—	—	—	—	—	—	—	—	—	—	—	—	—	—
	005794	32																	
	00AF94	64																	
FOSCSEL	002B98	16	—	—	—	—	—	—	—	—	—	IESO	—	—	—	—	FNOSC<2:0>		
	005798	32																	
	00AF98	64																	
FOSC	002B9C	16	—	—	—	—	—	—	—	—	PLLKEN	FCKSM<1:0>		IOL1WAY	—	—	OSCIOFNC	POSCMD<1:0>	
	00579C	32																	
	00AF9C	64																	
FWDT	002BA0	16	—	—	—	—	—	—	—	WDTWIN<1:0>		WINDIS	WDTEN<1:0>		WDTPRE	WDTPOST<3:0>			
	0057A0	32																	
	00AFA0	64																	
FPOR	002BA4	16	—	—	—	—	—	—	—	—	—	—	—	—	—	—	—	—	Reserved[1]
	0057A4	32																	
	00AFA4	64																	
FICD	002BA8	16	—	BTSWP	—	—	—	—	—	—	—	Reserved[1]	—	JTAGEN	—	—	—	ICS<1:0>	
	0057A8	32																	
	00AFA8	64																	

Note 1: These bits are reserved and must be programmed as '1'.
2: This bit is reserved and must be programmed as '0'.
3: When operating in Dual Partition mode, each partition will have dedicated Configuration registers. On a device Reset, the configuration values of the Active Partition are read at start-up, but during a soft swap condition, the configuration settings of the newly Active Partition are ignored.
4: FBOOT resides in configuration memory space.

© 2013-2015 Microchip Technology Inc.

TABLE 23-1: CONFIGURATION REGISTER MAP[3] (CONTINUED)

Name	Address	Device Memory Size (Kbytes)	Bits 23-16	Bit 15	Bit 14	Bit 13	Bit 12	Bit 11	Bit 10	Bit 9	Bit 8	Bit 7	Bit 6	Bit 5	Bit 4	Bit 3	Bit 2	Bit 1	Bit 0
FDEVOPT	002BAC	16	—	—	—	—	—	—	—	—	—	—	DBCC	—	ALTI2C2	ALTI2C1	Reserved[1]	—	PWMLOCK
	0057AC	32																	
	00AFAC	64																	
FALTREG	002BB0	16	—	—	—	—	—	—	—	—	—	—	CTXT2 <2:0>			—	CTXT1 <2:0>		
	0057B0	32																	
	00AFB0	64																	
FBTSEQ	002BFC	16	IBSEQ<11:0>					BSEQ<11:0>											
	0057FC	32																	
	00AFFC	64																	
FBOOT[4]	801000	—	—	—	—	—	—	—	—	—	—	—	—	—	—	—	—	BTMODE<1:0>	

Note 1: These bits are reserved and must be programmed as '1'.
2: This bit is reserved and must be programmed as '0'.
3: When operating in Dual Partition mode, each partition will have dedicated Configuration registers. On a device Reset, the configuration values of the Active Partition are read at start-up, but during a soft swap condition, the configuration settings of the newly Active Partition are ignored.
4: FBOOT resides in configuration memory space.

© 2013-2015 Microchip Technology Inc.

TABLE 23-2: CONFIGURATION BITS DESCRIPTION

Bit Field	Description
BSS<1:0>	Boot Segment Code-Protect Level bits 11 = Boot Segment is not code-protected other than BWRP 10 = Standard security 0x = High security
BSEN	Boot Segment Control bit 1 = No Boot Segment is enabled 0 = Boot Segment size is determined by the BSLIM<12:0> bits
BWRP	Boot Segment Write-Protect bit 1 = Boot Segment can be written 0 = Boot Segment is write-protected
BSLIM<12:0>	Boot Segment Flash Page Address Limit bits Contains the last active Boot Segment page. The value to be programmed is the inverted page address, such that programming additional '0's can only increase the Boot Segment size (i.e., 0x1FFD = 2 Pages or 1024 IW).
GSS<1:0>	General Segment Code-Protect Level bits 11 = User program memory is not code-protected 10 = Standard security 0x = High security
GWRP	General Segment Write-Protect bit 1 = User program memory is not write-protected 0 = User program memory is write-protected
CWRP	Configuration Segment Write-Protect bit 1 = Configuration data is not write-protected 0 = Configuration data is write-protected
CSS<2:0>	Configuration Segment Code-Protect Level bits 111 = Configuration data is not code-protected 110 = Standard security 10x = Enhanced security 0xx = High security
BTSWP	BOOTSWP Instruction Enable/Disable bit 1 = BOOTSWP instruction is disabled 0 = BOOTSWP instruction is enabled
BSEQ<11:0>	Boot Sequence Number bits (Dual Partition modes only) Relative value defining which partition will be active after device Reset; the partition containing a lower boot number will be active.
IBSEQ<11:0>	Inverse Boot Sequence Number bits (Dual Partition modes only) The one's complement of BSEQ<11:0>; must be calculated by the user and written for device programming. If BSEQx and IBSEQx are not complements of each other, the Boot Sequence Number is considered to be invalid.
AIVTDIS(1)	Alternate Interrupt Vector Table bit 1 = Alternate Interrupt Vector Table is disabled 0 = Alternate Interrupt Vector Table is enabled if INTCON2<8> = 1
IESO	Two-Speed Oscillator Start-up Enable bit 1 = Starts up device with FRC, then automatically switches to the user-selected oscillator source when ready 0 = Starts up device with the user-selected oscillator source
PWMLOCK	PWMx Lock Enable bit 1 = Certain PWMx registers may only be written after a key sequence 0 = PWMx registers may be written without a key sequence

Note 1: The Boot Segment must be present to use the Alternate Interrupt Vector Table.

© 2013-2015 Microchip Technology Inc.

TABLE 23-2: CONFIGURATION BITS DESCRIPTION (CONTINUED)

Bit Field	Description
FNOSC<2:0>	Oscillator Selection bits 111 = Fast RC Oscillator with Divide-by-N (FRCDIVN) 110 = Fast RC Oscillator with Divide-by-16 101 = Low-Power RC Oscillator (LPRC) 100 = Reserved; do not use 011 = Primary Oscillator with PLL module (XT + PLL, HS + PLL, EC + PLL) 010 = Primary Oscillator (XT, HS, EC) 001 = Fast RC Oscillator with Divide-by-N with PLL module (FRCPLL) 000 = Fast RC Oscillator (FRC)
FCKSM<1:0>	Clock Switching Mode bits 1x = Clock switching is disabled, Fail-Safe Clock Monitor is disabled 01 = Clock switching is enabled, Fail-Safe Clock Monitor is disabled 00 = Clock switching is enabled, Fail-Safe Clock Monitor is enabled
IOL1WAY	Peripheral Pin Select Configuration bit 1 = Allows only one reconfiguration 0 = Allows multiple reconfigurations
OSCIOFNC	OSC2 Pin Function bit (except in XT and HS modes) 1 = OSC2 is the clock output 0 = OSC2 is a general purpose digital I/O pin
POSCMD<1:0>	Primary Oscillator Mode Select bits 11 = Primary Oscillator is disabled 10 = HS Crystal Oscillator mode 01 = XT Crystal Oscillator mode 00 = EC (External Clock) mode
WDTEN<1:0>	Watchdog Timer Enable bits 11 = Watchdog Timer is always enabled (LPRC oscillator cannot be disabled; clearing the SWDTEN bit in the RCON register will have no effect) 10 = Watchdog Timer is enabled/disabled by user software (LPRC can be disabled by clearing the SWDTEN bit in the RCON register) 01 = Watchdog Timer is enabled only while device is active and is disabled while in Sleep mode; software control is disabled in this mode 00 = Watchdog Timer and SWDTEN bit are disabled
WINDIS	Watchdog Timer Window Enable bit 1 = Watchdog Timer in Non-Window mode 0 = Watchdog Timer in Window mode
PLLKEN	PLL Lock Enable bit 1 = PLL lock is enabled 0 = PLL lock is disabled
WDTPRE	Watchdog Timer Prescaler bit 1 = 1:128 0 = 1:32
WDTPOST<3:0>	Watchdog Timer Postscaler bits 1111 = 1:32,768 1110 = 1:16,384 • • • 0001 = 1:2 0000 = 1:1

Note 1: The Boot Segment must be present to use the Alternate Interrupt Vector Table.

TABLE 23-2: CONFIGURATION BITS DESCRIPTION (CONTINUED)

Bit Field	Description
WDTWIN<1:0>	Watchdog Timer Window Select bits 11 = WDT window is 25% of the WDT period 10 = WDT window is 37.5% of the WDT period 01 = WDT window is 50% of the WDT period 00 = WDT window is 75% of the WDT period
ALTI2C1	Alternate I2C1 Pin bit 1 = I2C1 is mapped to the SDA1/SCL1 pins 0 = I2C1 is mapped to the ASDA1/ASCL1 pins
ALTI2C2	Alternate I2C2 Pin bit 1 = I2C2 is mapped to the SDA2/SCL2 pins 0 = I2C2 is mapped to the ASDA2/ASCL2 pins
JTAGEN	JTAG Enable bit 1 = JTAG is enabled 0 = JTAG is disabled
ICS<1:0>	ICD Communication Channel Select bits 11 = Communicates on PGEC1 and PGED1 10 = Communicates on PGEC2 and PGED2 01 = Communicates on PGEC3 and PGED3 00 = Reserved, do not use
DBCC	DACx Output Cross Connection Select bit 1 = No cross connection between DAC outputs 0 = Interconnects DACOUT1 and DACOUT2
CTXT1<2:0>	Alternate Working Register Set 1 Interrupt Priority Level (IPL) Select bits 111 = Reserved 110 = Assigned to IPL of 7 101 = Assigned to IPL of 6 100 = Assigned to IPL of 5 011 = Assigned to IPL of 4 010 = Assigned to IPL of 3 001 = Assigned to IPL of 2 000 = Assigned to IPL of 1
CTXT2<2:0>	Alternate Working Register Set 2 Interrupt Priority Level (IPL) Select bits 111 = Reserved 110 = Assigned to IPL of 7 101 = Assigned to IPL of 6 100 = Assigned to IPL of 5 011 = Assigned to IPL of 4 010 = Assigned to IPL of 3 001 = Assigned to IPL of 2 000 = Assigned to IPL of 1
BTMODE<1:0>	Boot Mode Configuration bits 11 = Single Partition mode 10 = Dual Partition mode 01 = Protected Dual Partition mode 00 = Privileged Dual Partition mode

Note 1: The Boot Segment must be present to use the Alternate Interrupt Vector Table.

© 2013-2015 Microchip Technology Inc.

23.2 Device Calibration and Identification

The PGAx and current source modules on the dsPIC33EPXXGS50X family devices require Calibration Data registers to improve performance of the module over a wide operating range. These Calibration registers are read-only and are stored in configuration memory space. Prior to enabling the module, the calibration data must be read (TBLPAG and Table Read instruction) and loaded into their respective SFR registers. The device calibration addresses are shown in Table 23-3.

The dsPIC33EPXXGS50X devices have two identification registers near the end of configuration memory space that store the Device ID (DEVID) and Device Revision (DEVREV). These registers are used to determine the mask, variant and manufacturing information about the device. These registers are read-only and are shown in Register 23-1 and Register 23-2.

TABLE 23-3: DEVICE CALIBRATION ADDRESSES(1)

Calibration Name	Address	Bits 23-16	Bit 15	Bit 14	Bit 13	Bit 12	Bit 11	Bit 10	Bit 9	Bit 8	Bit 7	Bit 6	Bit 5	Bit 4	Bit 3	Bit 2	Bit 1	Bit 0
PGA1CAL	800E48	—	—	—	—	—	—	—	—	—	—	—	PGA1 Calibration Data					
PGA2CAL	800E4C	—	—	—	—	—	—	—	—	—	—	—	PGA2 Calibration Data					
ISRCCAL	800E78	—	—	—	—	—	—	—	—	—	—	—	Current Source Calibration Data					

Note 1: The calibration data must be copied into its respective registers prior to enabling the module.

REGISTER 23-1: DEVID: DEVICE ID REGISTER

R	R	R	R	R	R	R	R
DEVID<23:16>							
bit 23							bit 16

R	R	R	R	R	R	R	R
DEVID<15:8>							
bit 15							bit 8

R	R	R	R	R	R	R	R
DEVID<7:0>							
bit 7							bit 0

Legend:	R = Read-Only bit	U = Unimplemented bit

bit 23-0 **DEVID<23:0>:** Device Identifier bits

REGISTER 23-2: DEVREV: DEVICE REVISION REGISTER

R	R	R	R	R	R	R	R
DEVREV<23:16>							
bit 23							bit 16

R	R	R	R	R	R	R	R
DEVREV<15:8>							
bit 15							bit 8

R	R	R	R	R	R	R	R
DEVREV<7:0>							
bit 7							bit 0

Legend:	R = Read-only bit	U = Unimplemented bit

bit 23-0 **DEVREV<23:0>:** Device Revision bits

© 2013-2015 Microchip Technology Inc.

23.3 User OTP Memory

dsPIC33EPXXGS50X family devices contain 64 words of User One-Time-Programmable (OTP) memory, located at addresses, 0x800F80 through 0x800FFE. The User OTP Words can be used for storing checksum, code revisions, product information, such as serial numbers, system manufacturing dates, manufacturing lot numbers and other application-specific information. These words can only be written once at program time and not at run time; they can be read at run time.

23.4 On-Chip Voltage Regulator

All the dsPIC33EPXXGS50X family devices power their core digital logic at a nominal 1.8V. This can create a conflict for designs that are required to operate at a higher typical voltage, such as 3.3V. To simplify system design, all devices in the dsPIC33EPXXGS50X family incorporate an on-chip regulator that allows the device to run its core logic from VDD.

The regulator provides power to the core from the other VDD pins. A low-ESR (less than 1 Ohm) capacitor (such as tantalum or ceramic) must be connected to the VCAP pin (Figure 23-1). This helps to maintain the stability of the regulator. The recommended value for the filter capacitor is provided in Table 26-5, located in **Section 26.0 "Electrical Characteristics"**.

Note:	It is important for the low-ESR capacitor to be placed as close as possible to the VCAP pin.

FIGURE 23-1: CONNECTIONS FOR THE ON-CHIP VOLTAGE REGULATOR(1,2,3)

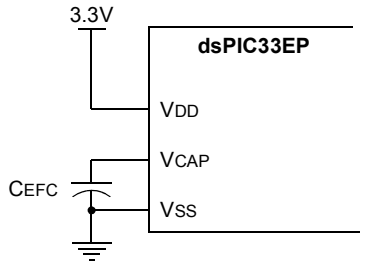

Note 1: These are typical operating voltages. Refer to Table 26-5 located in **Section 26.0 "Electrical Characteristics"** for the full operating ranges of VDD and VCAP.

2: It is important for the low-ESR capacitor to be placed as close as possible to the VCAP pin.

3: Typical VCAP pin voltage = 1.8V when VDD ≥ VDDMIN.

23.5 Brown-out Reset (BOR)

The Brown-out Reset (BOR) module is based on an internal voltage reference circuit that monitors the regulated supply voltage, VCAP. The main purpose of the BOR module is to generate a device Reset when a brown-out condition occurs. Brown-out conditions are generally caused by glitches on the AC mains (for example, missing portions of the AC cycle waveform due to bad power transmission lines or voltage sags due to excessive current draw when a large inductive load is turned on).

A BOR generates a Reset pulse which resets the device. The BOR selects the clock source based on the device Configuration bit values (FNOSC<2:0> and POSCMD<1:0>).

If an Oscillator mode is selected, the BOR activates the Oscillator Start-up Timer (OST). The system clock is held until OST expires. If the PLL is used, the clock is held until the LOCK bit (OSCCON<5>) is '1'.

Concurrently, the PWRT Time-out (TPWRT) is applied before the internal Reset is released. If TPWRT = 0 and a crystal oscillator is being used, then a nominal delay of TFSCM is applied. The total delay in this case is TFSCM. Refer to Parameter SY35 in Table 26-23 of **Section 26.0 "Electrical Characteristics"** for specific TFSCM values.

The BOR status bit (RCON<1>) is set to indicate that a BOR has occurred. The BOR circuit continues to operate while in Sleep or Idle modes and resets the device should VDD fall below the BOR threshold voltage.

23.6 Watchdog Timer (WDT)

For dsPIC33EPXXGS50X family devices, the WDT is driven by the LPRC oscillator. When the WDT is enabled, the clock source is also enabled.

23.6.1 PRESCALER/POSTSCALER

The nominal WDT clock source from LPRC is 32 kHz. This feeds a prescaler that can be configured for either 5-bit (divide-by-32) or 7-bit (divide-by-128) operation. The prescaler is set by the WDTPRE Configuration bit. With a 32 kHz input, the prescaler yields a WDT Time-out Period (TWDT), as shown in Parameter SY12 in Table 26-23.

A variable postscaler divides down the WDT prescaler output and allows for a wide range of time-out periods. The postscaler is controlled by the WDTPOST<3:0> Configuration bits (FWDT<3:0>), which allow the selection of 16 settings, from 1:1 to 1:32,768. Using the prescaler and postscaler, time-out periods, ranges from 1 ms to 131 seconds can be achieved.

The WDT, prescaler and postscaler are reset:

- On any device Reset
- On the completion of a clock switch, whether invoked by software (i.e., setting the OSWEN bit after changing the NOSCx bits) or by hardware (i.e., Fail-Safe Clock Monitor)
- When a `PWRSAV` instruction is executed (i.e., Sleep or Idle mode is entered)
- When the device exits Sleep or Idle mode to resume normal operation
- By a `CLRWDT` instruction during normal execution

Note:	The `CLRWDT` and `PWRSAV` instructions clear the prescaler and postscaler counts when executed.

23.6.2 SLEEP AND IDLE MODES

If the WDT is enabled, it continues to run during Sleep or Idle modes. When the WDT time-out occurs, the device wakes the device and code execution continues from where the `PWRSAV` instruction was executed. The corresponding SLEEP or IDLE bit (RCON<3:2>) needs to be cleared in software after the device wakes up.

23.6.3 ENABLING WDT

The WDT is enabled or disabled by the WDTEN<1:0> Configuration bits in the FWDT Configuration register. When the WDTEN<1:0> Configuration bits have been programmed to '`0b11`', the WDT is always enabled.

The WDT can be optionally controlled in software when the WDTEN<1:0> Configuration bits have been programmed to '`0b10`'. The WDT is enabled in software by setting the SWDTEN control bit (RCON<5>). The SWDTEN control bit is cleared on any device Reset. The software WDT option allows the user application to enable the WDT for critical code segments and disables the WDT during non-critical segments for maximum power savings.

The WDT Time-out flag bit, WDTO (RCON<4>), is not automatically cleared following a WDT time-out. To detect subsequent WDT events, the flag must be cleared in software.

23.6.4 WDT WINDOW

The Watchdog Timer has an optional Windowed mode, enabled by programming the WINDIS bit in the WDT Configuration register (FWDT<7>). In the Windowed mode (WINDIS = `0`), the WDT should be cleared based on the settings in the programmable Watchdog Timer Window select bits (WDTWIN<1:0>).

FIGURE 23-2: WDT BLOCK DIAGRAM

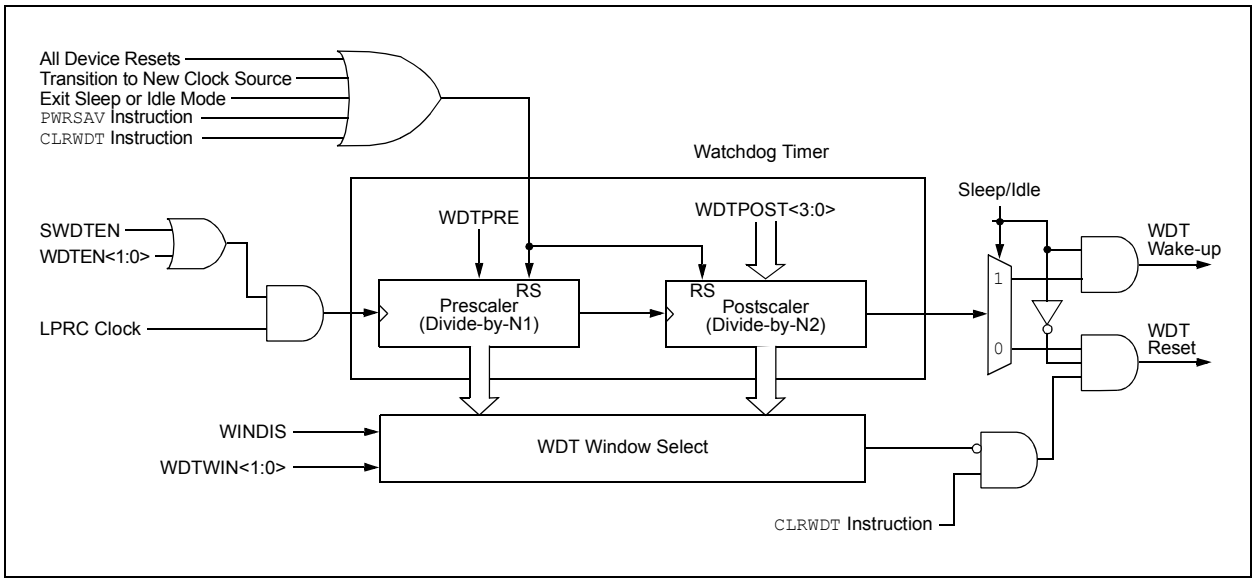

© 2013-2015 Microchip Technology Inc.

23.7 JTAG Interface

The dsPIC33EPXXGS50X family devices implement a JTAG interface, which supports boundary scan device testing. Detailed information on this interface is provided in future revisions of the document.

Note: Refer to **"Programming and Diagnostics"** (DS70608) in the *"dsPIC33/PIC24 Family Reference Manual"* for further information on usage, configuration and operation of the JTAG interface.

23.8 In-Circuit Serial Programming™

The dsPIC33EPXXGS50X family devices can be serially programmed while in the end application circuit. This is done with two lines for clock and data, and three other lines for power, ground and the programming sequence. Serial programming allows customers to manufacture boards with unprogrammed devices and then program the device just before shipping the product. Serial programming also allows the most recent firmware or a custom firmware to be programmed. Refer to the *"dsPIC33E/PIC24E Flash Programming Specification for Devices with Volatile Configuration Bits"* (DS70663) for details about In-Circuit Serial Programming™ (ICSP™).

Any of the three pairs of programming clock/data pins can be used:

- PGEC1 and PGED1
- PGEC2 and PGED2
- PGEC3 and PGED3

23.9 In-Circuit Debugger

When MPLAB® ICD 3 or REAL ICE™ emulator is selected as a debugger, the in-circuit debugging functionality is enabled. This function allows simple debugging functions when used with MPLAB IDE. Debugging functionality is controlled through the PGECx (Emulation/Debug Clock) and PGEDx (Emulation/Debug Data) pin functions.

Any of the three pairs of debugging clock/data pins can be used:

- PGEC1 and PGED1
- PGEC2 and PGED2
- PGEC3 and PGED3

To use the in-circuit debugger function of the device, the design must implement ICSP connections to $\overline{\text{MCLR}}$, VDD, VSS and the PGECx/PGEDx pin pair. In addition, when the feature is enabled, some of the resources are not available for general use. These resources include the first 80 bytes of data RAM and two I/O pins (PGECx and PGEDx).

23.10 Code Protection and CodeGuard™ Security

dsPIC33EPXXGS50X devices offer multiple levels of security for protecting individual intellectual property. The program Flash protection can be broken up into three segments: Boot Segment (BS), General Segment (GS) and Configuration Segment (CS). Boot Segment has the highest security privilege and can be thought to have limited restrictions when accessing other segments. General Segment has the least security and is intended for the end user system code. Configuration Segment contains only the device user configuration data which is located at the end of the program memory space.

The code protection features are controlled by the Configuration registers, FSEC and FBSLIM. The FSEC register controls the code-protect level for each segment and if that segment is write-protected. The size of BS and GS will depend on the BSLIM<12:0> setting and if the Alternate Interrupt Vector Table (AIVT) is enabled. The BSLIM<12:0> bits define the number of pages for BS with each page containing 512 IW. The smallest BS size is one page, which will consist of the Interrupt Vector Table (IVT) and 256 IW of code protection.

If the AIVT is enabled, the last page of BS will contain the AIVT and will not contain any BS code. With AIVT enabled, the smallest BS size is now two pages (1024 IW), with one page for the IVT and BS code, and the other page for the AIVT. Write protection of the BS does not cover the AIVT. The last page of BS can always be programmed or erased by BS code. The General Segment will start at the next page and will consume the rest of program Flash except for the Flash Configuration Words. The IVT will assume GS security only if BS is not enabled. The IVT is protected from being programmed or page erased when either security segment has enabled write protection.

Note: Refer to **"CodeGuard™ Intermediate Security"** (DS70005182) in the *"dsPIC33/PIC24 Family Reference Manual"* for further information on usage, configuration and operation of CodeGuard Security.

The different device security segments are shown in Figure 23-3. Here, all three segments are shown but are not required. If only basic code protection is required, then GS can be enabled independently or combined with CS, if desired.

FIGURE 23-3: SECURITY SEGMENTS EXAMPLE FOR dsPIC33EP64GS50X DEVICES

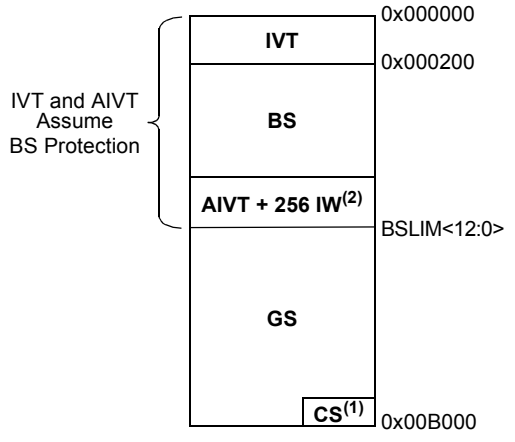

Note 1: If CS is write-protected, the last page (GS + CS) of program memory will be protected from an erase condition.

2: The last half (256 IW) of the last page of BS is unusable program memory.

dsPIC33EP64GS50X family devices can be operated in Dual Partition mode, where security is required for each partition. When operating in Dual Partition mode, the Active and Inactive Partitions both contain unique copies of the Reset vector, Interrupt Vector Tables (IVT and AIVT, if enabled) and the Flash Configuration Words. Both partitions have the three security segments described previously. Code may not be executed from the Inactive Partition, but it may be programmed by, and read from, the Active Partition, subject to defined code protection. Figure 23-4 shows the different security segments for a device operating in Dual Partition mode.

The device may also operate in a Protected Dual Partition mode or in Privileged Dual Partition mode. In Protected Dual Partition mode, Partition 1 is permanently erase/write-protected. This implementation allows for a “Factory Default” mode, which provides a fail-safe backup image to be stored in Partition 1. For example, a fail-safe bootloader can be placed in Partition 1, along with a fail-safe backup code image, which can be used or rewritten into Partition 2 in the event of a failed Flash update to Partition 2.

Privileged Dual Partition mode performs the same function as Protected Dual Partition mode, except additional constraints are applied in an effort to prevent code in the Boot Segment and General Segment from being used against each other.

FIGURE 23-4: SECURITY SEGMENTS EXAMPLE FOR dsPIC33EP64GS50X DEVICES (DUAL PARTITION MODES)

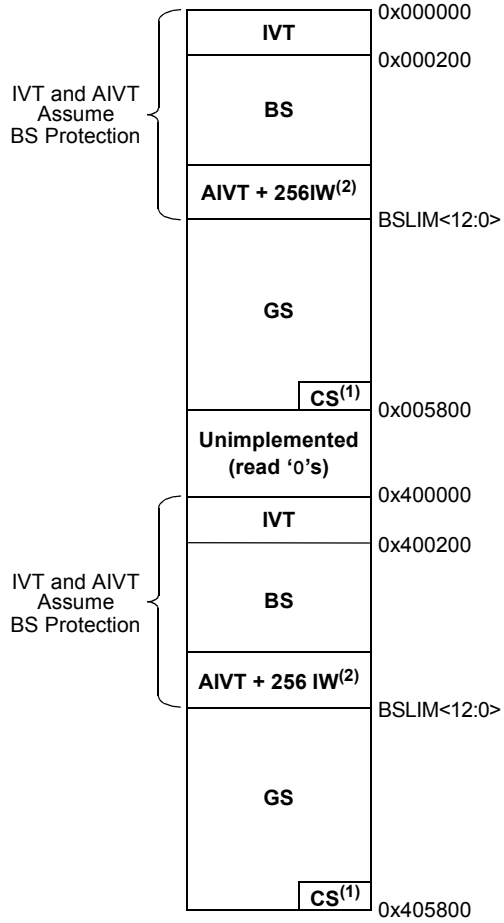

Note 1: If CS is write-protected, the last page (GS + CS) of program memory will be protected from an erase condition.

2: The last half (256 IW) of the last page of BS is unusable program memory.

© 2013-2015 Microchip Technology Inc.

24.0 INSTRUCTION SET SUMMARY

Note: This data sheet summarizes the features of the dsPIC33EPXXGS50X family of devices. It is not intended to be a comprehensive reference source. To complement the information in this data sheet, refer to the related section of the "*dsPIC33E/PIC24E Family Reference Manual*", which is available from the Microchip web site (www.microchip.com).

The dsPIC33EP instruction set is almost identical to that of the dsPIC30F and dsPIC33F.

Most instructions are a single program memory word (24 bits). Only three instructions require two program memory locations.

Each single-word instruction is a 24-bit word, divided into an 8-bit opcode, which specifies the instruction type and one or more operands, which further specify the operation of the instruction.

The instruction set is highly orthogonal and is grouped into five basic categories:

- Word or byte-oriented operations
- Bit-oriented operations
- Literal operations
- DSP operations
- Control operations

Table 24-1 lists the general symbols used in describing the instructions.

The dsPIC33E instruction set summary in Table 24-2 lists all the instructions, along with the status flags affected by each instruction.

Most word or byte-oriented W register instructions (including barrel shift instructions) have three operands:

- The first source operand, which is typically a register 'Wb' without any address modifier
- The second source operand, which is typically a register 'Ws' with or without an address modifier
- The destination of the result, which is typically a register 'Wd' with or without an address modifier

However, word or byte-oriented file register instructions have two operands:

- The file register specified by the value 'f'
- The destination, which could be either the file register 'f' or the W0 register, which is denoted as 'WREG'

Most bit-oriented instructions (including simple rotate/shift instructions) have two operands:

- The W register (with or without an address modifier) or file register (specified by the value of 'Ws' or 'f')
- The bit in the W register or file register (specified by a literal value or indirectly by the contents of register 'Wb')

The literal instructions that involve data movement can use some of the following operands:

- A literal value to be loaded into a W register or file register (specified by 'k')
- The W register or file register where the literal value is to be loaded (specified by 'Wb' or 'f')

However, literal instructions that involve arithmetic or logical operations use some of the following operands:

- The first source operand, which is a register 'Wb' without any address modifier
- The second source operand, which is a literal value
- The destination of the result (only if not the same as the first source operand), which is typically a register 'Wd' with or without an address modifier

The `MAC` class of DSP instructions can use some of the following operands:

- The accumulator (A or B) to be used (required operand)
- The W registers to be used as the two operands
- The X and Y address space prefetch operations
- The X and Y address space prefetch destinations
- The accumulator write back destination

The other DSP instructions do not involve any multiplication and can include:

- The accumulator to be used (required)
- The source or destination operand (designated as Wso or Wdo, respectively) with or without an address modifier
- The amount of shift specified by a W register 'Wn' or a literal value

The control instructions can use some of the following operands:

- A program memory address
- The mode of the table read and table write instructions

Most instructions are a single word. Certain double-word instructions are designed to provide all the required information in these 48 bits. In the second word, the 8 MSbs are '0's. If this second word is executed as an instruction (by itself), it executes as a NOP.

The double-word instructions execute in two instruction cycles.

Most single-word instructions are executed in a single instruction cycle, unless a conditional test is true or the Program Counter is changed as a result of the instruction, or a PSV or table read is performed. In these cases, the execution takes multiple instruction cycles, with the additional instruction cycle(s) executed as a NOP. Certain instructions that involve skipping over the subsequent instruction require either two or three cycles if the skip is performed, depending on whether the instruction being skipped is a single-word or two-word instruction. Moreover, double-word moves require two cycles.

Note: For more details on the instruction set, refer to the *"16-bit MCU and DSC Programmer's Reference Manual"* (DS70157).

TABLE 24-1: SYMBOLS USED IN OPCODE DESCRIPTIONS

Field	Description
#text	Means literal defined by "text"
(text)	Means "content of text"
[text]	Means "the location addressed by text"
{ }	Optional field or operation
a ∈ {b, c, d}	a is selected from the set of values b, c, d
<n:m>	Register bit field
.b	Byte mode selection
.d	Double-Word mode selection
.S	Shadow register select
.w	Word mode selection (default)
Acc	One of two accumulators {A, B}
AWB	Accumulator write-back destination address register ∈ {W13, [W13]+ = 2}
bit4	4-bit bit selection field (used in word addressed instructions) ∈ {0...15}
C, DC, N, OV, Z	MCU Status bits: Carry, Digit Carry, Negative, Overflow, Sticky Zero
Expr	Absolute address, label or expression (resolved by the linker)
f	File register address ∈ {0x0000...0x1FFF}
lit1	1-bit unsigned literal ∈ {0,1}
lit4	4-bit unsigned literal ∈ {0...15}
lit5	5-bit unsigned literal ∈ {0...31}
lit8	8-bit unsigned literal ∈ {0...255}
lit10	10-bit unsigned literal ∈ {0...255} for Byte mode, {0:1023} for Word mode
lit14	14-bit unsigned literal ∈ {0...16384}
lit16	16-bit unsigned literal ∈ {0...65535}
lit23	23-bit unsigned literal ∈ {0...8388608}; LSb must be '0'
None	Field does not require an entry, can be blank
OA, OB, SA, SB	DSP Status bits: ACCA Overflow, ACCB Overflow, ACCA Saturate, ACCB Saturate
PC	Program Counter
Slit10	10-bit signed literal ∈ {-512...511}
Slit16	16-bit signed literal ∈ {-32768...32767}
Slit6	6-bit signed literal ∈ {-16...16}
Wb	Base W register ∈ {W0...W15}
Wd	Destination W register ∈ { Wd, [Wd], [Wd++], [Wd--], [++Wd], [--Wd] }
Wdo	Destination W register ∈ { Wnd, [Wnd], [Wnd++], [Wnd--], [++Wnd], [--Wnd], [Wnd+Wb] }
Wm,Wn	Dividend, Divisor Working register pair (direct addressing)

© 2013-2015 Microchip Technology Inc.

TABLE 24-1: SYMBOLS USED IN OPCODE DESCRIPTIONS (CONTINUED)

Field	Description
Wm*Wm	Multiplicand and Multiplier Working register pair for Square instructions ∈ {W4 * W4,W5 * W5,W6 * W6,W7 * W7}
Wm*Wn	Multiplicand and Multiplier Working register pair for DSP instructions ∈ {W4 * W5,W4 * W6,W4 * W7,W5 * W6,W5 * W7,W6 * W7}
Wn	One of 16 Working registers ∈ {W0...W15}
Wnd	One of 16 Destination Working registers ∈ {W0...W15}
Wns	One of 16 Source Working registers ∈ {W0...W15}
WREG	W0 (Working register used in file register instructions)
Ws	Source W register ∈ { Ws, [Ws], [Ws++], [Ws--], [++Ws], [--Ws] }
Wso	Source W register ∈ { Wns, [Wns], [Wns++], [Wns--], [++Wns], [--Wns], [Wns+Wb] }
Wx	X Data Space Prefetch Address register for DSP instructions ∈ {[W8] + = 6, [W8] + = 4, [W8] + = 2, [W8], [W8] - = 6, [W8] - = 4, [W8] - = 2, [W9] + = 6, [W9] + = 4, [W9] + = 2, [W9], [W9] - = 6, [W9] - = 4, [W9] - = 2, [W9 + W12], none}
Wxd	X Data Space Prefetch Destination register for DSP instructions ∈ {W4...W7}
Wy	Y Data Space Prefetch Address register for DSP instructions ∈ {[W10] + = 6, [W10] + = 4, [W10] + = 2, [W10], [W10] - = 6, [W10] - = 4, [W10] - = 2, [W11] + = 6, [W11] + = 4, [W11] + = 2, [W11], [W11] - = 6, [W11] - = 4, [W11] - = 2, [W11 + W12], none}
Wyd	Y Data Space Prefetch Destination register for DSP instructions ∈ {W4...W7}

TABLE 24-2: INSTRUCTION SET OVERVIEW

Base Instr #	Assembly Mnemonic	Assembly Syntax	Description	# of Words	# of Cycles(1)	Status Flags Affected
1	ADD	ADD Acc	Add Accumulators	1	1	OA,OB,SA,SB
		ADD f	f = f + WREG	1	1	C,DC,N,OV,Z
		ADD f,WREG	WREG = f + WREG	1	1	C,DC,N,OV,Z
		ADD #lit10,Wn	Wd = lit10 + Wd	1	1	C,DC,N,OV,Z
		ADD Wb,Ws,Wd	Wd = Wb + Ws	1	1	C,DC,N,OV,Z
		ADD Wb,#lit5,Wd	Wd = Wb + lit5	1	1	C,DC,N,OV,Z
		ADD Wso,#Slit4,Acc	16-bit Signed Add to Accumulator	1	1	OA,OB,SA,SB
2	ADDC	ADDC f	f = f + WREG + (C)	1	1	C,DC,N,OV,Z
		ADDC f,WREG	WREG = f + WREG + (C)	1	1	C,DC,N,OV,Z
		ADDC #lit10,Wn	Wd = lit10 + Wd + (C)	1	1	C,DC,N,OV,Z
		ADDC Wb,Ws,Wd	Wd = Wb + Ws + (C)	1	1	C,DC,N,OV,Z
		ADDC Wb,#lit5,Wd	Wd = Wb + lit5 + (C)	1	1	C,DC,N,OV,Z
3	AND	AND f	f = f .AND. WREG	1	1	N,Z
		AND f,WREG	WREG = f .AND. WREG	1	1	N,Z
		AND #lit10,Wn	Wd = lit10 .AND. Wd	1	1	N,Z
		AND Wb,Ws,Wd	Wd = Wb .AND. Ws	1	1	N,Z
		AND Wb,#lit5,Wd	Wd = Wb .AND. lit5	1	1	N,Z
4	ASR	ASR f	f = Arithmetic Right Shift f	1	1	C,N,OV,Z
		ASR f,WREG	WREG = Arithmetic Right Shift f	1	1	C,N,OV,Z
		ASR Ws,Wd	Wd = Arithmetic Right Shift Ws	1	1	C,N,OV,Z
		ASR Wb,Wns,Wnd	Wnd = Arithmetic Right Shift Wb by Wns	1	1	N,Z
		ASR Wb,#lit5,Wnd	Wnd = Arithmetic Right Shift Wb by lit5	1	1	N,Z
5	BCLR	BCLR f,#bit4	Bit Clear f	1	1	None
		BCLR Ws,#bit4	Bit Clear Ws	1	1	None
6	BOOTSWP	BOOTSWP	Swap the active and inactive program Flash Space	1	2	None
7	BRA	BRA C,Expr	Branch if Carry	1	1 (4)	None
		BRA GE,Expr	Branch if greater than or equal	1	1 (4)	None
		BRA GEU,Expr	Branch if unsigned greater than or equal	1	1 (4)	None
		BRA GT,Expr	Branch if greater than	1	1 (4)	None
		BRA GTU,Expr	Branch if unsigned greater than	1	1 (4)	None
		BRA LE,Expr	Branch if less than or equal	1	1 (4)	None
		BRA LEU,Expr	Branch if unsigned less than or equal	1	1 (4)	None
		BRA LT,Expr	Branch if less than	1	1 (4)	None
		BRA LTU,Expr	Branch if unsigned less than	1	1 (4)	None
		BRA N,Expr	Branch if Negative	1	1 (4)	None
		BRA NC,Expr	Branch if Not Carry	1	1 (4)	None
		BRA NN,Expr	Branch if Not Negative	1	1 (4)	None
		BRA NOV,Expr	Branch if Not Overflow	1	1 (4)	None
		BRA NZ,Expr	Branch if Not Zero	1	1 (4)	None
		BRA OA,Expr	Branch if Accumulator A overflow	1	1 (4)	None
		BRA OB,Expr	Branch if Accumulator B overflow	1	1 (4)	None
		BRA OV,Expr	Branch if Overflow	1	1 (4)	None
		BRA SA,Expr	Branch if Accumulator A saturated	1	1 (4)	None
		BRA SB,Expr	Branch if Accumulator B saturated	1	1 (4)	None
		BRA Expr	Branch Unconditionally	1	4	None
		BRA Z,Expr	Branch if Zero	1	1 (4)	None
		BRA Wn	Computed Branch	1	4	None
8	BSET	BSET f,#bit4	Bit Set f	1	1	None
		BSET Ws,#bit4	Bit Set Ws	1	1	None

Note 1: Read and Read-Modify-Write (e.g., bit operations and logical operations) on non-CPU SFRs incur an additional instruction cycle.

© 2013-2015 Microchip Technology Inc.

TABLE 24-2: INSTRUCTION SET OVERVIEW (CONTINUED)

Base Instr #	Assembly Mnemonic	Assembly Syntax		Description	# of Words	# of Cycles(1)	Status Flags Affected
9	BSW	BSW.C	Ws,Wb	Write C bit to Ws<Wb>	1	1	None
		BSW.Z	Ws,Wb	Write Z bit to Ws<Wb>	1	1	None
10	BTG	BTG	f,#bit4	Bit Toggle f	1	1	None
		BTG	Ws,#bit4	Bit Toggle Ws	1	1	None
11	BTSC	BTSC	f,#bit4	Bit Test f, Skip if Clear	1	1 (2 or 3)	None
		BTSC	Ws,#bit4	Bit Test Ws, Skip if Clear	1	1 (2 or 3)	None
12	BTSS	BTSS	f,#bit4	Bit Test f, Skip if Set	1	1 (2 or 3)	None
		BTSS	Ws,#bit4	Bit Test Ws, Skip if Set	1	1 (2 or 3)	None
13	BTST	BTST	f,#bit4	Bit Test f	1	1	Z
		BTST.C	Ws,#bit4	Bit Test Ws to C	1	1	C
		BTST.Z	Ws,#bit4	Bit Test Ws to Z	1	1	Z
		BTST.C	Ws,Wb	Bit Test Ws<Wb> to C	1	1	C
		BTST.Z	Ws,Wb	Bit Test Ws<Wb> to Z	1	1	Z
14	BTSTS	BTSTS	f,#bit4	Bit Test then Set f	1	1	Z
		BTSTS.C	Ws,#bit4	Bit Test Ws to C, then Set	1	1	C
		BTSTS.Z	Ws,#bit4	Bit Test Ws to Z, then Set	1	1	Z
15	CALL	CALL	lit23	Call subroutine	2	4	SFA
		CALL	Wn	Call indirect subroutine	1	4	SFA
		CALL.L	Wn	Call indirect subroutine (long address)	1	4	SFA
16	CLR	CLR	f	f = 0x0000	1	1	None
		CLR	WREG	WREG = 0x0000	1	1	None
		CLR	Ws	Ws = 0x0000	1	1	None
		CLR	Acc,Wx,Wxd,Wy,Wyd,AWB	Clear Accumulator	1	1	OA,OB,SA,SB
17	CLRWDT	CLRWDT		Clear Watchdog Timer	1	1	WDTO,Sleep
18	COM	COM	f	$f = \overline{f}$	1	1	N,Z
		COM	f,WREG	$WREG = \overline{f}$	1	1	N,Z
		COM	Ws,Wd	$Wd = \overline{Ws}$	1	1	N,Z
19	CP	CP	f	Compare f with WREG	1	1	C,DC,N,OV,Z
		CP	Wb,#lit8	Compare Wb with lit8	1	1	C,DC,N,OV,Z
		CP	Wb,Ws	Compare Wb with Ws (Wb – Ws)	1	1	C,DC,N,OV,Z
20	CP0	CP0	f	Compare f with 0x0000	1	1	C,DC,N,OV,Z
		CP0	Ws	Compare Ws with 0x0000	1	1	C,DC,N,OV,Z
21	CPB	CPB	f	Compare f with WREG, with Borrow	1	1	C,DC,N,OV,Z
		CPB	Wb,#lit8	Compare Wb with lit8, with Borrow	1	1	C,DC,N,OV,Z
		CPB	Wb,Ws	Compare Wb with Ws, with Borrow ($Wb – Ws – \overline{C}$)	1	1	C,DC,N,OV,Z
22	CPSEQ	CPSEQ	Wb,Wn	Compare Wb with Wn, skip if =	1	1 (2 or 3)	None
	CPBEQ	CPBEQ	Wb,Wn,Expr	Compare Wb with Wn, branch if =	1	1 (5)	None
23	CPSGT	CPSGT	Wb,Wn	Compare Wb with Wn, skip if >	1	1 (2 or 3)	None
	CPBGT	CPBGT	Wb,Wn,Expr	Compare Wb with Wn, branch if >	1	1 (5)	None
24	CPSLT	CPSLT	Wb,Wn	Compare Wb with Wn, skip if <	1	1 (2 or 3)	None
	CPBLT	CPBLT	Wb,Wn,Expr	Compare Wb with Wn, branch if <	1	1 (5)	None
25	CPSNE	CPSNE	Wb,Wn	Compare Wb with Wn, skip if ≠	1	1 (2 or 3)	None
	CPBNE	CPBNE	Wb,Wn,Expr	Compare Wb with Wn, branch if ≠	1	1 (5)	None

Note 1: Read and Read-Modify-Write (e.g., bit operations and logical operations) on non-CPU SFRs incur an additional instruction cycle.

TABLE 24-2: INSTRUCTION SET OVERVIEW (CONTINUED)

Base Instr #	Assembly Mnemonic	Assembly Syntax	Description	# of Words	# of Cycles(1)	Status Flags Affected
26	CTXTSWP	CTXTSWP #lit3	Switch CPU register context to context defined by lit3	1	2	None
		CTXTSWP Wn	Switch CPU register context to context defined by Wn	1	2	None
27	DAW	DAW Wn	Wn = decimal adjust Wn	1	1	C
28	DEC	DEC f	f = f – 1	1	1	C,DC,N,OV,Z
		DEC f,WREG	WREG = f – 1	1	1	C,DC,N,OV,Z
		DEC Ws,Wd	Wd = Ws – 1	1	1	C,DC,N,OV,Z
29	DEC2	DEC2 f	f = f – 2	1	1	C,DC,N,OV,Z
		DEC2 f,WREG	WREG = f – 2	1	1	C,DC,N,OV,Z
		DEC2 Ws,Wd	Wd = Ws – 2	1	1	C,DC,N,OV,Z
30	DISI	DISI #lit14	Disable Interrupts for k instruction cycles	1	1	None
31	DIV	DIV.S Wm,Wn	Signed 16/16-bit Integer Divide	1	18	N,Z,C,OV
		DIV.SD Wm,Wn	Signed 32/16-bit Integer Divide	1	18	N,Z,C,OV
		DIV.U Wm,Wn	Unsigned 16/16-bit Integer Divide	1	18	N,Z,C,OV
		DIV.UD Wm,Wn	Unsigned 32/16-bit Integer Divide	1	18	N,Z,C,OV
32	DIVF	DIVF Wm,Wn	Signed 16/16-bit Fractional Divide	1	18	N,Z,C,OV
33	DO	DO #lit15,Expr	Do code to PC + Expr, lit15 + 1 times	2	2	None
		DO Wn,Expr	Do code to PC + Expr, (Wn) + 1 times	2	2	None
34	ED	ED Wm*Wm,Acc,Wx,Wy,Wxd	Euclidean Distance (no accumulate)	1	1	OA,OB,OAB, SA,SB,SAB
35	EDAC	EDAC Wm*Wm,Acc,Wx,Wy,Wxd	Euclidean Distance	1	1	OA,OB,OAB, SA,SB,SAB
36	EXCH	EXCH Wns,Wnd	Swap Wns with Wnd	1	1	None
37	FBCL	FBCL Ws,Wnd	Find Bit Change from Left (MSb) Side	1	1	C
38	FF1L	FF1L Ws,Wnd	Find First One from Left (MSb) Side	1	1	C
39	FF1R	FF1R Ws,Wnd	Find First One from Right (LSb) Side	1	1	C
40	GOTO	GOTO Expr	Go to address	2	4	None
		GOTO Wn	Go to indirect	1	4	None
		GOTO.L Wn	Go to indirect (long address)	1	4	None
41	INC	INC f	f = f + 1	1	1	C,DC,N,OV,Z
		INC f,WREG	WREG = f + 1	1	1	C,DC,N,OV,Z
		INC Ws,Wd	Wd = Ws + 1	1	1	C,DC,N,OV,Z
42	INC2	INC2 f	f = f + 2	1	1	C,DC,N,OV,Z
		INC2 f,WREG	WREG = f + 2	1	1	C,DC,N,OV,Z
		INC2 Ws,Wd	Wd = Ws + 2	1	1	C,DC,N,OV,Z
43	IOR	IOR f	f = f .IOR. WREG	1	1	N,Z
		IOR f,WREG	WREG = f .IOR. WREG	1	1	N,Z
		IOR #lit10,Wn	Wd = lit10 .IOR. Wd	1	1	N,Z
		IOR Wb,Ws,Wd	Wd = Wb .IOR. Ws	1	1	N,Z
		IOR Wb,#lit5,Wd	Wd = Wb .IOR. lit5	1	1	N,Z
44	LAC	LAC Wso,#Slit4,Acc	Load Accumulator	1	1	OA,OB,OAB, SA,SB,SAB
45	LNK	LNK #lit14	Link Frame Pointer	1	1	SFA
46	LSR	LSR f	f = Logical Right Shift f	1	1	C,N,OV,Z
		LSR f,WREG	WREG = Logical Right Shift f	1	1	C,N,OV,Z
		LSR Ws,Wd	Wd = Logical Right Shift Ws	1	1	C,N,OV,Z
		LSR Wb,Wns,Wnd	Wnd = Logical Right Shift Wb by Wns	1	1	N,Z
		LSR Wb,#lit5,Wnd	Wnd = Logical Right Shift Wb by lit5	1	1	N,Z
47	MAC	MAC Wm*Wn,Acc,Wx,Wxd,Wy,Wyd,AWB	Multiply and Accumulate	1	1	OA,OB,OAB, SA,SB,SAB
		MAC Wm*Wm,Acc,Wx,Wxd,Wy,Wyd	Square and Accumulate	1	1	OA,OB,OAB, SA,SB,SAB

Note 1: Read and Read-Modify-Write (e.g., bit operations and logical operations) on non-CPU SFRs incur an additional instruction cycle.

© 2013-2015 Microchip Technology Inc.

TABLE 24-2: INSTRUCTION SET OVERVIEW (CONTINUED)

Base Instr #	Assembly Mnemonic	Assembly Syntax	Description	# of Words	# of Cycles(1)	Status Flags Affected
48	MOV	MOV f,Wn	Move f to Wn	1	1	None
		MOV f	Move f to f	1	1	None
		MOV f,WREG	Move f to WREG	1	1	None
		MOV #lit16,Wn	Move 16-bit literal to Wn	1	1	None
		MOV.b #lit8,Wn	Move 8-bit literal to Wn	1	1	None
		MOV Wn,f	Move Wn to f	1	1	None
		MOV Wso,Wdo	Move Ws to Wd	1	1	None
		MOV WREG,f	Move WREG to f	1	1	None
		MOV.D Wns,Wd	Move Double from W(ns):W(ns + 1) to Wd	1	2	None
		MOV.D Ws,Wnd	Move Double from Ws to W(nd + 1):W(nd)	1	2	None
49	MOVPAG	MOVPAG #lit10,DSRPAG	Move 10-bit literal to DSRPAG	1	1	None
		MOVPAG #lit8,TBLPAG	Move 8-bit literal to TBLPAG	1	1	None
		MOVPAGW Ws, DSRPAG	Move Ws<9:0> to DSRPAG	1	1	None
		MOVPAGW Ws, TBLPAG	Move Ws<7:0> to TBLPAG	1	1	None
50	MOVSAC	MOVSAC Acc,Wx,Wxd,Wy,Wyd,AWB	Prefetch and store accumulator	1	1	None
51	MPY	MPY Wm*Wn,Acc,Wx,Wxd,Wy,Wyd	Multiply Wm by Wn to Accumulator	1	1	OA,OB,OAB, SA,SB,SAB
		MPY Wm*Wm,Acc,Wx,Wxd,Wy,Wyd	Square Wm to Accumulator	1	1	OA,OB,OAB, SA,SB,SAB
52	MPY.N	MPY.N Wm*Wn,Acc,Wx,Wxd,Wy,Wyd	-(Multiply Wm by Wn) to Accumulator	1	1	None
53	MSC	MSC Wm*Wm,Acc,Wx,Wxd,Wy,Wyd,AWB	Multiply and Subtract from Accumulator	1	1	OA,OB,OAB, SA,SB,SAB
54	MUL	MUL.SS Wb,Ws,Wnd	{Wnd + 1, Wnd} = signed(Wb) * signed(Ws)	1	1	None
		MUL.SS Wb,Ws,Acc	Accumulator = signed(Wb) * signed(Ws)	1	1	None
		MUL.SU Wb,Ws,Wnd	{Wnd + 1, Wnd} = signed(Wb) * unsigned(Ws)	1	1	None
		MUL.SU Wb,Ws,Acc	Accumulator = signed(Wb) * unsigned(Ws)	1	1	None
		MUL.SU Wb,#lit5,Acc	Accumulator = signed(Wb) * unsigned(lit5)	1	1	None
		MUL.US Wb,Ws,Wnd	{Wnd + 1, Wnd} = unsigned(Wb) * signed(Ws)	1	1	None
		MUL.US Wb,Ws,Acc	Accumulator = unsigned(Wb) * signed(Ws)	1	1	None
		MUL.UU Wb,Ws,Wnd	{Wnd + 1, Wnd} = unsigned(Wb) * unsigned(Ws)	1	1	None
		MUL.UU Wb,#lit5,Acc	Accumulator = unsigned(Wb) * unsigned(lit5)	1	1	None
		MUL.UU Wb,Ws,Acc	Accumulator = unsigned(Wb) * unsigned(Ws)	1	1	None
		MULW.SS Wb,Ws,Wnd	Wnd = signed(Wb) * signed(Ws)	1	1	None
		MULW.SU Wb,Ws,Wnd	Wnd = signed(Wb) * unsigned(Ws)	1	1	None
		MULW.US Wb,Ws,Wnd	Wnd = unsigned(Wb) * signed(Ws)	1	1	None
		MULW.UU Wb,Ws,Wnd	Wnd = unsigned(Wb) * unsigned(Ws)	1	1	None
		MUL.SU Wb,#lit5,Wnd	{Wnd + 1, Wnd} = signed(Wb) * unsigned(lit5)	1	1	None
		MUL.SU Wb,#lit5,Wnd	Wnd = signed(Wb) * unsigned(lit5)	1	1	None
		MUL.UU Wb,#lit5,Wnd	{Wnd + 1, Wnd} = unsigned(Wb) * unsigned(lit5)	1	1	None
		MUL.UU Wb,#lit5,Wnd	Wnd = unsigned(Wb) * unsigned(lit5)	1	1	None
		MUL f	W3:W2 = f * WREG	1	1	None

Note 1: Read and Read-Modify-Write (e.g., bit operations and logical operations) on non-CPU SFRs incur an additional instruction cycle.

TABLE 24-2: INSTRUCTION SET OVERVIEW (CONTINUED)

Base Instr #	Assembly Mnemonic	Assembly Syntax	Description	# of Words	# of Cycles(1)	Status Flags Affected
55	NEG	NEG Acc	Negate Accumulator	1	1	OA,OB,OAB, SA,SB,SAB
		NEG f	f = $\overline{f}$ + 1	1	1	C,DC,N,OV,Z
		NEG f,WREG	WREG = $\overline{f}$ + 1	1	1	C,DC,N,OV,Z
		NEG Ws,Wd	Wd = $\overline{Ws}$ + 1	1	1	C,DC,N,OV,Z
56	NOP	NOP	No Operation	1	1	None
		NOPR	No Operation	1	1	None
57	POP	POP f	Pop f from Top-of-Stack (TOS)	1	1	None
		POP Wdo	Pop from Top-of-Stack (TOS) to Wdo	1	1	None
		POP.D Wnd	Pop from Top-of-Stack (TOS) to W(nd):W(nd + 1)	1	2	None
		POP.S	Pop Shadow Registers	1	1	All
58	PUSH	PUSH f	Push f to Top-of-Stack (TOS)	1	1	None
		PUSH Wso	Push Wso to Top-of-Stack (TOS)	1	1	None
		PUSH.D Wns	Push W(ns):W(ns + 1) to Top-of-Stack (TOS)	1	2	None
		PUSH.S	Push Shadow Registers	1	1	None
59	PWRSAV	PWRSAV #lit1	Go into Sleep or Idle mode	1	1	WDTO,Sleep
60	RCALL	RCALL Expr	Relative Call	1	4	SFA
		RCALL Wn	Computed Call	1	4	SFA
61	REPEAT	REPEAT #lit15	Repeat Next Instruction lit15 + 1 times	1	1	None
		REPEAT Wn	Repeat Next Instruction (Wn) + 1 times	1	1	None
62	RESET	RESET	Software device Reset	1	1	None
63	RETFIE	RETFIE	Return from interrupt	1	6 (5)	SFA
64	RETLW	RETLW #lit10,Wn	Return with literal in Wn	1	6 (5)	SFA
65	RETURN	RETURN	Return from Subroutine	1	6 (5)	SFA
66	RLC	RLC f	f = Rotate Left through Carry f	1	1	C,N,Z
		RLC f,WREG	WREG = Rotate Left through Carry f	1	1	C,N,Z
		RLC Ws,Wd	Wd = Rotate Left through Carry Ws	1	1	C,N,Z
67	RLNC	RLNC f	f = Rotate Left (No Carry) f	1	1	N,Z
		RLNC f,WREG	WREG = Rotate Left (No Carry) f	1	1	N,Z
		RLNC Ws,Wd	Wd = Rotate Left (No Carry) Ws	1	1	N,Z
68	RRC	RRC f	f = Rotate Right through Carry f	1	1	C,N,Z
		RRC f,WREG	WREG = Rotate Right through Carry f	1	1	C,N,Z
		RRC Ws,Wd	Wd = Rotate Right through Carry Ws	1	1	C,N,Z
69	RRNC	RRNC f	f = Rotate Right (No Carry) f	1	1	N,Z
		RRNC f,WREG	WREG = Rotate Right (No Carry) f	1	1	N,Z
		RRNC Ws,Wd	Wd = Rotate Right (No Carry) Ws	1	1	N,Z
70	SAC	SAC Acc,#Slit4,Wdo	Store Accumulator	1	1	None
		SAC.R Acc,#Slit4,Wdo	Store Rounded Accumulator	1	1	None
71	SE	SE Ws,Wnd	Wnd = sign-extended Ws	1	1	C,N,Z
72	SETM	SETM f	f = 0xFFFF	1	1	None
		SETM WREG	WREG = 0xFFFF	1	1	None
		SETM Ws	Ws = 0xFFFF	1	1	None
73	SFTAC	SFTAC Acc,Wn	Arithmetic Shift Accumulator by (Wn)	1	1	OA,OB,OAB, SA,SB,SAB
		SFTAC Acc,#Slit6	Arithmetic Shift Accumulator by Slit6	1	1	OA,OB,OAB, SA,SB,SAB

Note 1: Read and Read-Modify-Write (e.g., bit operations and logical operations) on non-CPU SFRs incur an additional instruction cycle.

© 2013-2015 Microchip Technology Inc.

TABLE 24-2: INSTRUCTION SET OVERVIEW (CONTINUED)

Base Instr #	Assembly Mnemonic	Assembly Syntax		Description	# of Words	# of Cycles(1)	Status Flags Affected
74	SL	SL	f	f = Left Shift f	1	1	C,N,OV,Z
		SL	f,WREG	WREG = Left Shift f	1	1	C,N,OV,Z
		SL	Ws,Wd	Wd = Left Shift Ws	1	1	C,N,OV,Z
		SL	Wb,Wns,Wnd	Wnd = Left Shift Wb by Wns	1	1	N,Z
		SL	Wb,#lit5,Wnd	Wnd = Left Shift Wb by lit5	1	1	N,Z
75	SUB	SUB	Acc	Subtract Accumulators	1	1	OA,OB,OAB, SA,SB,SAB
		SUB	f	f = f – WREG	1	1	C,DC,N,OV,Z
		SUB	f,WREG	WREG = f – WREG	1	1	C,DC,N,OV,Z
		SUB	#lit10,Wn	Wn = Wn – lit10	1	1	C,DC,N,OV,Z
		SUB	Wb,Ws,Wd	Wd = Wb – Ws	1	1	C,DC,N,OV,Z
		SUB	Wb,#lit5,Wd	Wd = Wb – lit5	1	1	C,DC,N,OV,Z
76	SUBB	SUBB	f	f = f – WREG – ($\overline{C}$)	1	1	C,DC,N,OV,Z
		SUBB	f,WREG	WREG = f – WREG – ($\overline{C}$)	1	1	C,DC,N,OV,Z
		SUBB	#lit10,Wn	Wn = Wn – lit10 – ($\overline{C}$)	1	1	C,DC,N,OV,Z
		SUBB	Wb,Ws,Wd	Wd = Wb – Ws – ($\overline{C}$)	1	1	C,DC,N,OV,Z
		SUBB	Wb,#lit5,Wd	Wd = Wb – lit5 – ($\overline{C}$)	1	1	C,DC,N,OV,Z
77	SUBR	SUBR	f	f = WREG – f	1	1	C,DC,N,OV,Z
		SUBR	f,WREG	WREG = WREG – f	1	1	C,DC,N,OV,Z
		SUBR	Wb,Ws,Wd	Wd = Ws – Wb	1	1	C,DC,N,OV,Z
		SUBR	Wb,#lit5,Wd	Wd = lit5 – Wb	1	1	C,DC,N,OV,Z
78	SUBBR	SUBBR	f	f = WREG – f – ($\overline{C}$)	1	1	C,DC,N,OV,Z
		SUBBR	f,WREG	WREG = WREG – f – ($\overline{C}$)	1	1	C,DC,N,OV,Z
		SUBBR	Wb,Ws,Wd	Wd = Ws – Wb – ($\overline{C}$)	1	1	C,DC,N,OV,Z
		SUBBR	Wb,#lit5,Wd	Wd = lit5 – Wb – ($\overline{C}$)	1	1	C,DC,N,OV,Z
79	SWAP	SWAP.b	Wn	Wn = nibble swap Wn	1	1	None
		SWAP	Wn	Wn = byte swap Wn	1	1	None
80	TBLRDH	TBLRDH	Ws,Wd	Read Prog<23:16> to Wd<7:0>	1	5	None
81	TBLRDL	TBLRDL	Ws,Wd	Read Prog<15:0> to Wd	1	5	None
82	TBLWTH	TBLWTH	Ws,Wd	Write Ws<7:0> to Prog<23:16>	1	2	None
83	TBLWTL	TBLWTL	Ws,Wd	Write Ws to Prog<15:0>	1	2	None
84	ULNK	ULNK		Unlink Frame Pointer	1	1	SFA
85	XOR	XOR	f	f = f .XOR. WREG	1	1	N,Z
		XOR	f,WREG	WREG = f .XOR. WREG	1	1	N,Z
		XOR	#lit10,Wn	Wd = lit10 .XOR. Wd	1	1	N,Z
		XOR	Wb,Ws,Wd	Wd = Wb .XOR. Ws	1	1	N,Z
		XOR	Wb,#lit5,Wd	Wd = Wb .XOR. lit5	1	1	N,Z
86	ZE	ZE	Ws,Wnd	Wnd = Zero-extend Ws	1	1	C,Z,N

Note 1: Read and Read-Modify-Write (e.g., bit operations and logical operations) on non-CPU SFRs incur an additional instruction cycle.

NOTES:

© 2013-2015 Microchip Technology Inc.

25.0 DEVELOPMENT SUPPORT

The PIC® microcontrollers (MCU) and dsPIC® digital signal controllers (DSC) are supported with a full range of software and hardware development tools:

- Integrated Development Environment
  - MPLAB® X IDE Software
- Compilers/Assemblers/Linkers
  - MPLAB XC Compiler
  - MPASM™ Assembler
  - MPLINK™ Object Linker/ MPLIB™ Object Librarian
  - MPLAB Assembler/Linker/Librarian for Various Device Families
- Simulators
  - MPLAB X SIM Software Simulator
- Emulators
  - MPLAB REAL ICE™ In-Circuit Emulator
- In-Circuit Debuggers/Programmers
  - MPLAB ICD 3
  - PICkit™ 3
- Device Programmers
  - MPLAB PM3 Device Programmer
- Low-Cost Demonstration/Development Boards, Evaluation Kits and Starter Kits
- Third-party development tools

25.1 MPLAB X Integrated Development Environment Software

The MPLAB X IDE is a single, unified graphical user interface for Microchip and third-party software, and hardware development tool that runs on Windows®, Linux and Mac OS® X. Based on the NetBeans IDE, MPLAB X IDE is an entirely new IDE with a host of free software components and plug-ins for high-performance application development and debugging. Moving between tools and upgrading from software simulators to hardware debugging and programming tools is simple with the seamless user interface.

With complete project management, visual call graphs, a configurable watch window and a feature-rich editor that includes code completion and context menus, MPLAB X IDE is flexible and friendly enough for new users. With the ability to support multiple tools on multiple projects with simultaneous debugging, MPLAB X IDE is also suitable for the needs of experienced users.

Feature-Rich Editor:

- Color syntax highlighting
- Smart code completion makes suggestions and provides hints as you type
- Automatic code formatting based on user-defined rules
- Live parsing

User-Friendly, Customizable Interface:

- Fully customizable interface: toolbars, toolbar buttons, windows, window placement, etc.
- Call graph window

Project-Based Workspaces:

- Multiple projects
- Multiple tools
- Multiple configurations
- Simultaneous debugging sessions

File History and Bug Tracking:

- Local file history feature
- Built-in support for Bugzilla issue tracker

25.2 MPLAB XC Compilers

The MPLAB XC Compilers are complete ANSI C compilers for all of Microchip's 8, 16 and 32-bit MCU and DSC devices. These compilers provide powerful integration capabilities, superior code optimization and ease of use. MPLAB XC Compilers run on Windows, Linux or MAC OS X.

For easy source level debugging, the compilers provide debug information that is optimized to the MPLAB X IDE.

The free MPLAB XC Compiler editions support all devices and commands, with no time or memory restrictions, and offer sufficient code optimization for most applications.

MPLAB XC Compilers include an assembler, linker and utilities. The assembler generates relocatable object files that can then be archived or linked with other relocatable object files and archives to create an executable file. MPLAB XC Compiler uses the assembler to produce its object file. Notable features of the assembler include:

- Support for the entire device instruction set
- Support for fixed-point and floating-point data
- Command-line interface
- Rich directive set
- Flexible macro language
- MPLAB X IDE compatibility

25.3 MPASM Assembler

The MPASM Assembler is a full-featured, universal macro assembler for PIC10/12/16/18 MCUs.

The MPASM Assembler generates relocatable object files for the MPLINK Object Linker, Intel® standard HEX files, MAP files to detail memory usage and symbol reference, absolute LST files that contain source lines and generated machine code, and COFF files for debugging.

The MPASM Assembler features include:

- Integration into MPLAB X IDE projects
- User-defined macros to streamline assembly code
- Conditional assembly for multipurpose source files
- Directives that allow complete control over the assembly process

25.4 MPLINK Object Linker/ MPLIB Object Librarian

The MPLINK Object Linker combines relocatable objects created by the MPASM Assembler. It can link relocatable objects from precompiled libraries, using directives from a linker script.

The MPLIB Object Librarian manages the creation and modification of library files of precompiled code. When a routine from a library is called from a source file, only the modules that contain that routine will be linked in with the application. This allows large libraries to be used efficiently in many different applications.

The object linker/library features include:

- Efficient linking of single libraries instead of many smaller files
- Enhanced code maintainability by grouping related modules together
- Flexible creation of libraries with easy module listing, replacement, deletion and extraction

25.5 MPLAB Assembler, Linker and Librarian for Various Device Families

MPLAB Assembler produces relocatable machine code from symbolic assembly language for PIC24, PIC32 and dsPIC DSC devices. MPLAB XC Compiler uses the assembler to produce its object file. The assembler generates relocatable object files that can then be archived or linked with other relocatable object files and archives to create an executable file. Notable features of the assembler include:

- Support for the entire device instruction set
- Support for fixed-point and floating-point data
- Command-line interface
- Rich directive set
- Flexible macro language
- MPLAB X IDE compatibility

© 2013-2015 Microchip Technology Inc.

25.6 MPLAB X SIM Software Simulator

The MPLAB X SIM Software Simulator allows code development in a PC-hosted environment by simulating the PIC MCUs and dsPIC DSCs on an instruction level. On any given instruction, the data areas can be examined or modified and stimuli can be applied from a comprehensive stimulus controller. Registers can be logged to files for further run-time analysis. The trace buffer and logic analyzer display extend the power of the simulator to record and track program execution, actions on I/O, most peripherals and internal registers.

The MPLAB X SIM Software Simulator fully supports symbolic debugging using the MPLAB XC Compilers, and the MPASM and MPLAB Assemblers. The software simulator offers the flexibility to develop and debug code outside of the hardware laboratory environment, making it an excellent, economical software development tool.

25.7 MPLAB REAL ICE In-Circuit Emulator System

The MPLAB REAL ICE In-Circuit Emulator System is Microchip's next generation high-speed emulator for Microchip Flash DSC and MCU devices. It debugs and programs all 8, 16 and 32-bit MCU, and DSC devices with the easy-to-use, powerful graphical user interface of the MPLAB X IDE.

The emulator is connected to the design engineer's PC using a high-speed USB 2.0 interface and is connected to the target with either a connector compatible with in-circuit debugger systems (RJ-11) or with the new high-speed, noise tolerant, Low-Voltage Differential Signal (LVDS) interconnection (CAT5).

The emulator is field upgradable through future firmware downloads in MPLAB X IDE. MPLAB REAL ICE offers significant advantages over competitive emulators including full-speed emulation, run-time variable watches, trace analysis, complex breakpoints, logic probes, a ruggedized probe interface and long (up to three meters) interconnection cables.

25.8 MPLAB ICD 3 In-Circuit Debugger System

The MPLAB ICD 3 In-Circuit Debugger System is Microchip's most cost-effective, high-speed hardware debugger/programmer for Microchip Flash DSC and MCU devices. It debugs and programs PIC Flash microcontrollers and dsPIC DSCs with the powerful, yet easy-to-use graphical user interface of the MPLAB IDE.

The MPLAB ICD 3 In-Circuit Debugger probe is connected to the design engineer's PC using a high-speed USB 2.0 interface and is connected to the target with a connector compatible with the MPLAB ICD 2 or MPLAB REAL ICE systems (RJ-11). MPLAB ICD 3 supports all MPLAB ICD 2 headers.

25.9 PICkit 3 In-Circuit Debugger/ Programmer

The MPLAB PICkit 3 allows debugging and programming of PIC and dsPIC Flash microcontrollers at a most affordable price point using the powerful graphical user interface of the MPLAB IDE. The MPLAB PICkit 3 is connected to the design engineer's PC using a full-speed USB interface and can be connected to the target via a Microchip debug (RJ-11) connector (compatible with MPLAB ICD 3 and MPLAB REAL ICE). The connector uses two device I/O pins and the Reset line to implement in-circuit debugging and In-Circuit Serial Programming™ (ICSP™).

25.10 MPLAB PM3 Device Programmer

The MPLAB PM3 Device Programmer is a universal, CE compliant device programmer with programmable voltage verification at V_{DDMIN} and V_{DDMAX} for maximum reliability. It features a large LCD display (128 x 64) for menus and error messages, and a modular, detachable socket assembly to support various package types. The ICSP cable assembly is included as a standard item. In Stand-Alone mode, the MPLAB PM3 Device Programmer can read, verify and program PIC devices without a PC connection. It can also set code protection in this mode. The MPLAB PM3 connects to the host PC via an RS-232 or USB cable. The MPLAB PM3 has high-speed communications and optimized algorithms for quick programming of large memory devices, and incorporates an MMC card for file storage and data applications.

25.11 Demonstration/Development Boards, Evaluation Kits and Starter Kits

A wide variety of demonstration, development and evaluation boards for various PIC MCUs and dsPIC DSCs allows quick application development on fully functional systems. Most boards include prototyping areas for adding custom circuitry and provide application firmware and source code for examination and modification.

The boards support a variety of features, including LEDs, temperature sensors, switches, speakers, RS-232 interfaces, LCD displays, potentiometers and additional EEPROM memory.

The demonstration and development boards can be used in teaching environments, for prototyping custom circuits and for learning about various microcontroller applications.

In addition to the PICDEM™ and dsPICDEM™ demonstration/development board series of circuits, Microchip has a line of evaluation kits and demonstration software for analog filter design, KEELOQ® security ICs, CAN, IrDA®, PowerSmart battery management, SEEVAL® evaluation system, Sigma-Delta ADC, flow rate sensing, plus many more.

Also available are starter kits that contain everything needed to experience the specified device. This usually includes a single application and debug capability, all on one board.

Check the Microchip web page (www.microchip.com) for the complete list of demonstration, development and evaluation kits.

25.12 Third-Party Development Tools

Microchip also offers a great collection of tools from third-party vendors. These tools are carefully selected to offer good value and unique functionality.

- Device Programmers and Gang Programmers from companies, such as SoftLog and CCS
- Software Tools from companies, such as Gimpel and Trace Systems
- Protocol Analyzers from companies, such as Saleae and Total Phase
- Demonstration Boards from companies, such as MikroElektronika, Digilent® and Olimex
- Embedded Ethernet Solutions from companies, such as EZ Web Lynx, WIZnet and IPLogika®

© 2013-2015 Microchip Technology Inc.

26.0 ELECTRICAL CHARACTERISTICS

This section provides an overview of the dsPIC33EPXXGS50X family electrical characteristics. Additional information will be provided in future revisions of this document as it becomes available.

Absolute maximum ratings for the dsPIC33EPXXGS50X family are listed below. Exposure to these maximum rating conditions for extended periods may affect device reliability. Functional operation of the device at these, or any other conditions above the parameters indicated in the operation listings of this specification, is not implied.

Absolute Maximum Ratings(1)

Ambient temperature under bias ..... -40°C to +125°C
Storage temperature ..... -65°C to +150°C
Voltage on V_{DD} with respect to V_{SS} ..... -0.3V to +4.0V
Voltage on any pin that is not 5V tolerant with respect to V_{SS}(3) ..... -0.3V to (V_{DD} + 0.3V)
Voltage on any 5V tolerant pin with respect to V_{SS} when $V_{DD} \geq 3.0V$(3) ..... -0.3V to +5.5V
Voltage on any 5V tolerant pin with respect to Vss when $V_{DD} < 3.0V$(3) ..... -0.3V to +3.6V
Maximum current out of V_{SS} pin ..... 300 mA
Maximum current into V_{DD} pin(2) ..... 300 mA
Maximum current sunk/sourced by any 4x I/O pin ..... 15 mA
Maximum current sunk/sourced by any 8x I/O pin ..... 25 mA
Maximum current sunk by all ports(2) ..... 200 mA

Note 1: Stresses above those listed under “Absolute Maximum Ratings” may cause permanent damage to the device. This is a stress rating only and functional operation of the device at those, or any other conditions above those indicated in the operation listings of this specification, is not implied. Exposure to maximum rating conditions for extended periods may affect device reliability.

2: Maximum allowable current is a function of device maximum power dissipation (see Table 26-2).

3: See the **“Pin Diagrams”** section for the 5V tolerant pins.

26.1 DC Characteristics

TABLE 26-1: OPERATING MIPS vs. VOLTAGE

Characteristic	V_{DD} Range (in Volts)	Temperature Range (in °C)	Maximum MIPS
			dsPIC33EPXXGS50X Family
—	3.0V to 3.6V(1)	-40°C to +85°C	70
—	3.0V to 3.6V(1)	-40°C to +125°C	60

Note 1: Device is functional at $V_{BORMIN} < V_{DD} < V_{DDMIN}$. Analog modules (ADC, PGAs and comparators) may have degraded performance. Device functionality is tested but not characterized. Refer to Parameter BO10 in Table 26-13 for the minimum and maximum BOR values.

TABLE 26-2: THERMAL OPERATING CONDITIONS

Rating	Symbol	Min.	Typ.	Max.	Unit
Industrial Temperature Devices					
Operating Junction Temperature Range	T_J	-40	—	+125	°C
Operating Ambient Temperature Range	T_A	-40	—	+85	°C
Extended Temperature Devices					
Operating Junction Temperature Range	T_J	-40	—	+140	°C
Operating Ambient Temperature Range	T_A	-40	—	+125	°C
Power Dissipation: Internal Chip Power Dissipation: $P_{INT} = V_{DD} \times (I_{DD} - \Sigma I_{OH})$ I/O Pin Power Dissipation: $I/O = \Sigma (\{V_{DD} - V_{OH}\} \times I_{OH}) + \Sigma (V_{OL} \times I_{OL})$	P_D	$P_{INT} + P_{I/O}$			W
Maximum Allowed Power Dissipation	P_{DMAX}	$(T_J - T_A)/\theta_{JA}$			W

TABLE 26-3: THERMAL PACKAGING CHARACTERISTICS

Characteristic	Symbol	Typ.	Max.	Unit	Notes
Package Thermal Resistance, 64-Pin TQFP 10x10x1 mm	θ_{JA}	49.0	—	°C/W	1
Package Thermal Resistance, 48-Pin TQFP 7x7x1.0 mm	θ_{JA}	TBD	—	°C/W	1
Package Thermal Resistance, 44-Pin QFN 8x8 mm	θ_{JA}	29.0	—	°C/W	1
Package Thermal Resistance, 44-Pin TQFP 10x10x1 mm	θ_{JA}	50.0	—	°C/W	1
Package Thermal Resistance, 28-Pin QFN-S 6x6x0.9 mm	θ_{JA}	30.0	—	°C/W	1
Package Thermal Resistance, 28-Pin UQFN 6x6x0.5 mm	θ_{JA}	26.0	—	°C/W	1
Package Thermal Resistance, 28-Pin SOIC 7.50 mm	θ_{JA}	70.0	—	°C/W	1

Note 1: Junction to ambient thermal resistance, Theta-JA (θ_{JA}) numbers are achieved by package simulations.

© 2013-2015 Microchip Technology Inc.

TABLE 26-4: DC TEMPERATURE AND VOLTAGE SPECIFICATIONS

DC CHARACTERISTICS			Standard Operating Conditions (see Note 1): 3.0V to 3.6V (unless otherwise stated) Operating temperature -40°C ≤ TA ≤ +85°C for Industrial -40°C ≤ TA ≤ +125°C for Extended				
Param No.	**Symbol**	**Characteristic**	**Min.**	**Typ.**	**Max.**	**Units**	**Conditions**
Operating Voltage							
DC10	VDD	**Supply Voltage**	3.0	—	3.6	V	
DC12	VDR	**RAM Retention Voltage**	1.8	—	—	V	**(Note 2)**
DC16	VPOR	**VDD Start Voltage** to Ensure Internal Power-on Reset Signal	—	—	VSS	V	
DC17	SVDD	**VDD Rise Rate** to Ensure Internal Power-on Reset Signal	1.0	—	—	V/ms	0V-3V in 3 ms

Note 1: Device is functional at VBORMIN < VDD < VDDMIN. Analog modules (ADC, PGAs and comparators) may have degraded performance. Device functionality is tested but not characterized. Refer to Parameter BO10 in Table 26-13 for the minimum and maximum BOR values.

2: This is the limit to which VDD may be lowered and the RAM contents will always be retained.

TABLE 26-5: FILTER CAPACITOR (CEFC) SPECIFICATIONS

Standard Operating Conditions (unless otherwise stated): Operating temperature -40°C ≤ TA ≤ +85°C for Industrial -40°C ≤ TA ≤ +125°C for Extended							
Param No.	**Symbol**	**Characteristics**	**Min.**	**Typ.**	**Max.**	**Units**	**Comments**
	CEFC	External Filter Capacitor Value(1)	4.7	10	—	μF	Capacitor must have a low series resistance (<1 ohm)

Note 1: Typical VCAP Voltage = 1.8 volts when VDD ≥ VDDMIN.

TABLE 26-6: DC CHARACTERISTICS: OPERATING CURRENT (IDD)

DC CHARACTERISTICS			Standard Operating Conditions: 3.0V to 3.6V (unless otherwise stated) Operating temperature -40°C ≤ TA ≤ +85°C for Industrial -40°C ≤ TA ≤ +125°C for Extended			
Parameter No.	**Typ.**	**Max.**	**Units**	**Conditions**		
Operating Current (IDD)(1)						
DC20d	7	12	mA	-40°C	3.3V	10 MIPS
DC20a	7	12	mA	+25°C		
DC20b	7	12	mA	+85°C		
DC20c	7	12	mA	+125°C		
DC22d	11	19	mA	-40°C	3.3V	20 MIPS
DC22a	11	19	mA	+25°C		
DC22b	11	19	mA	+85°C		
DC22c	11	19	mA	+125°C		
DC24d	19	30	mA	-40°C	3.3V	40 MIPS
DC24a	19	30	mA	+25°C		
DC24b	19	30	mA	+85°C		
DC24c	19	30	mA	+125°C		
DC25d	26	41	mA	-40°C	3.3V	60 MIPS
DC25a	26	41	mA	+25°C		
DC25b	26	41	mA	+85°C		
DC25c	26	41	mA	+125°C		
DC26d	30	46	mA	-40°C	3.3V	70 MIPS
DC26a	30	46	mA	+25°C		
DC26b	30	46	mA	+85°C		
DC27d	51	81	mA	-40°C	3.3V	70 MIPS (Note 2)
DC27a	51	81	mA	+25°C		
DC27b	52	82	mA	+85°C		
DC27c	53	83	mA	+125°C		

Note 1: IDD is primarily a function of the operating voltage and frequency. Other factors, such as I/O pin loading and switching rate, oscillator type, internal code execution pattern and temperature, also have an impact on the current consumption. The test conditions for all IDD measurements are as follows:

- Oscillator is configured in EC mode with PLL, OSC1 is driven with external square wave from rail-to-rail (EC clock overshoot/undershoot < 250 mV required)
- CLKO is configured as an I/O input pin in the Configuration Word
- All I/O pins are configured as inputs and pulled to VSS
- $\overline{\text{MCLR}}$ = VDD, WDT and FSCM are disabled
- CPU, SRAM, program memory and data memory are operational
- No peripheral modules are operating or being clocked (all defined PMDx bits are set)
- CPU is executing `while(1)` statement
- JTAG is disabled

2: For this specification, the following test conditions apply:

- APLL clock is enabled
- All 5 PWMs enabled and operating at maximum speed (PTCON2<2:0> = `000`), PTPER = 1000h, 50% duty cycle
- All other peripherals are disabled (corresponding PMDx bits are set)

© 2013-2015 Microchip Technology Inc.

TABLE 26-7: DC CHARACTERISTICS: IDLE CURRENT (IIDLE)

DC CHARACTERISTICS			Standard Operating Conditions: 3.0V to 3.6V (unless otherwise stated) Operating temperature -40°C ≤ TA ≤ +85°C for Industrial -40°C ≤ TA ≤ +125°C for Extended			
Parameter No.	**Typ.**	**Max.**	**Units**	**Conditions**		
Idle Current (IIDLE)(1)						
DC40d	2	4	mA	-40°C	3.3V	10 MIPS
DC40a	2	4	mA	+25°C		
DC40b	2	4	mA	+85°C		
DC40c	2	4	mA	+125°C		
DC42d	3	6	mA	-40°C	3.3V	20 MIPS
DC42a	3	6	mA	+25°C		
DC42b	3	6	mA	+85°C		
DC42c	3	6	mA	+125°C		
DC44d	6	12	mA	-40°C	3.3V	40 MIPS
DC44a	6	12	mA	+25°C		
DC44b	6	12	mA	+85°C		
DC44c	6	12	mA	+125°C		
DC45d	8	15	mA	-40°C	3.3V	60 MIPS
DC45a	8	15	mA	+25°C		
DC45b	8	15	mA	+85°C		
DC45c	8	15	mA	+125°C		
DC46d	10	20	mA	-40°C	3.3V	70 MIPS
DC46a	10	20	mA	+25°C		
DC46b	10	20	mA	+85°C		

Note 1: Base Idle current (IIDLE) is measured as follows:

- CPU core is off, oscillator is configured in EC mode and external clock is active; OSC1 is driven with external square wave from rail-to-rail (EC clock overshoot/undershoot < 250 mV required)
- CLKO is configured as an I/O input pin in the Configuration Word
- All I/O pins are configured as inputs and pulled to VSS
- $\overline{\text{MCLR}}$ = VDD, WDT and FSCM are disabled
- No peripheral modules are operating or being clocked (all defined PMDx bits are set)
- The NVMSIDL bit (NVMCON<12>) = 1 (i.e., Flash regulator is set to standby while the device is in Idle mode)
- The VREGSF bit (RCON<11>) = 0 (i.e., Flash regulator is set to standby while the device is in Sleep mode)
- JTAG is disabled

TABLE 26-8: DC CHARACTERISTICS: POWER-DOWN CURRENT (I_{PD})

DC CHARACTERISTICS			Standard Operating Conditions: 3.0V to 3.6V (unless otherwise stated) Operating temperature -40°C ≤ TA ≤ +85°C for Industrial -40°C ≤ TA ≤ +125°C for Extended		
Parameter No.	**Typ.**	**Max.**	**Units**	**Conditions**	
Power-Down Current (I_{PD})(1)					
DC60d	12	50	μA	-40°C	3.3V
DC60a	18	80	μA	+25°C	
DC60b	130	300	μA	+85°C	
DC60c	500	800	μA	+125°C	

Note 1: I_{PD} (Sleep) current is measured as follows:
- CPU core is off, oscillator is configured in EC mode and external clock is active; OSC1 is driven with external square wave from rail-to-rail (EC clock overshoot/undershoot < 250 mV required)
- CLKO is configured as an I/O input pin in the Configuration Word
- All I/O pins are configured as inputs and pulled to V_{SS}
- $\overline{MCLR}$ = V_{DD}, WDT and FSCM are disabled
- All peripheral modules are disabled (PMDx bits are all set)
- The VREGS bit (RCON<8>) = 0 (i.e., core regulator is set to standby while the device is in Sleep mode)
- The VREGSF bit (RCON<11>) = 0 (i.e., Flash regulator is set to standby while the device is in Sleep mode)
- JTAG is disabled

TABLE 26-9: DC CHARACTERISTICS: WATCHDOG TIMER DELTA CURRENT (ΔI_{WDT})(1)

DC CHARACTERISTICS			Standard Operating Conditions: 3.0V to 3.6V (unless otherwise stated) Operating temperature -40°C ≤ TA ≤ +85°C for Industrial -40°C ≤ TA ≤ +125°C for Extended		
Parameter No.	**Typ.**	**Max.**	**Units**	**Conditions**	
DC61d	13	50	μA	-40°C	3.3V
DC61a	19	80	μA	+25°C	
DC61b	12	—	μA	+85°C	
DC61c	13	—	μA	+125°C	

Note 1: The ΔI_{WDT} current is the additional current consumed when the module is enabled. This current should be added to the base I_{PD} current. All parameters are characterized but not tested during manufacturing.

© 2013-2015 Microchip Technology Inc.

TABLE 26-10: DC CHARACTERISTICS: DOZE CURRENT (IDOZE)

DC CHARACTERISTICS			Standard Operating Conditions: 3.0V to 3.6V (unless otherwise stated) Operating temperature -40°C ≤ TA ≤ +85°C for Industrial -40°C ≤ TA ≤ +125°C for Extended				
Parameter No.	**Typ.**	**Max.**	**Doze Ratio**	**Units**	**Conditions**		
Doze Current (IDOZE)(1)							
DC73a(2)	20	40	1:2	mA	-40°C	3.3V	FOSC = 140 MHz
DC73g	9	20	1:128	mA			
DC70a(2)	20	40	1:2	mA	+25°C	3.3V	FOSC = 140 MHz
DC70g	9	20	1:128	mA			
DC71a(2)	20	40	1:2	mA	+85°C	3.3V	FOSC = 140 MHz
DC71g	9	20	1:128	mA			
DC72a(2)	20	40	1:2	mA	+125°C	3.3V	FOSC = 120 MHz
DC72g	9	20	1:128	mA			

Note 1: IDOZE is primarily a function of the operating voltage and frequency. Other factors, such as I/O pin loading and switching rate, oscillator type, internal code execution pattern and temperature, also have an impact on the current consumption. The test conditions for all IDOZE measurements are as follows:

- Oscillator is configured in EC mode and external clock is active, OSC1 is driven with external square wave from rail-to-rail (EC clock overshoot/undershoot < 250 mV required)
- CLKO is configured as an I/O input pin in the Configuration Word
- All I/O pins are configured as inputs and pulled to VSS
- $\overline{MCLR}$ = VDD, WDT and FSCM are disabled
- CPU, SRAM, program memory and data memory are operational
- No peripheral modules are operating or being clocked (all defined PMDx bits are set)
- CPU is executing `while(1)` statement
- JTAG is disabled

2: These parameter are characterized but not tested in manufacturing.

TABLE 26-11: DC CHARACTERISTICS: I/O PIN INPUT SPECIFICATIONS

DC CHARACTERISTICS			Standard Operating Conditions: 3.0V to 3.6V (unless otherwise stated) Operating temperature -40°C ≤ TA ≤ +85°C for Industrial -40°C ≤ TA ≤ +125°C for Extended				
Param No.	**Symbol**	**Characteristic**	**Min.**	**Typ.(1)**	**Max.**	**Units**	**Conditions**
	VIL	**Input Low Voltage**					
DI10		Any I/O Pin and $\overline{\text{MCLR}}$	VSS	—	0.2 VDD	V	
DI18		I/O Pins with SDAx, SCLx	VSS	—	0.3 VDD	V	SMBus disabled
DI19		I/O Pins with SDAx, SCLx	VSS	—	0.8	V	SMBus enabled
	VIH	**Input High Voltage**					
DI20		I/O Pins Not 5V Tolerant(4)	0.8 VDD	—	VDD	V	
		I/O Pins 5V Tolerant and $\overline{\text{MCLR}}$(4)	0.8 VDD	—	5.5	V	
		5V Tolerant I/O Pins with SDAx, SCLx(4)	0.8 VDD	—	5.5	V	SMBus disabled
		5V I/O Pins with SDAx, SCLx(4)	2.1	—	5.5	V	SMBus enabled
		I/O Pins with SDAx, SCLx Not 5V Tolerant(4)	0.8 VDD	—	VDD	V	SMBus disabled
		I/O Pins with SDAx, SCLx Not 5V Tolerant(4)	2.1	—	VDD	V	SMBus enabled
DI30	ICNPU	**Input Change Notification Pull-up Current**	150	340	550	μA	VDD = 3.3V, VPIN = VSS
DI31	ICNPD	**Input Change Notification Pull-Down Current(5)**	20	60	100	μA	VDD = 3.3V, VPIN = VDD

Note 1: Data in "Typ." column is at 3.3V, +25°C unless otherwise stated.

2: The leakage current on the $\overline{\text{MCLR}}$ pin is strongly dependent on the applied voltage level. The specified levels represent normal operating conditions. Higher leakage current can be measured at different input voltages.

3: Negative current is defined as current sourced by the pin.

4: See the **"Pin Diagrams"** section for the 5V tolerant I/O pins.

5: VIL Source < (VSS – 0.3). Characterized but not tested.

6: VIH Source > (VDD + 0.3) for pins that are not 5V tolerant only.

7: Digital 5V tolerant pins do not have internal high-side diodes to VDD and cannot tolerate any "positive" input injection current.

8: Injection Currents > | 0 | can affect the ADC results by approximately 4-6 counts.

9: Any number and/or combination of I/O pins not excluded under IICL or IICH conditions are permitted provided the mathematical "absolute instantaneous" sum of the input injection currents from all pins do not exceed the specified limit. Characterized but not tested.

© 2013-2015 Microchip Technology Inc.

TABLE 26-11: DC CHARACTERISTICS: I/O PIN INPUT SPECIFICATIONS (CONTINUED)

DC CHARACTERISTICS			Standard Operating Conditions: 3.0V to 3.6V (unless otherwise stated) Operating temperature -40°C ≤ TA ≤ +85°C for Industrial -40°C ≤ TA ≤ +125°C for Extended				
Param No.	**Symbol**	**Characteristic**	**Min.**	**Typ.(1)**	**Max.**	**Units**	**Conditions**
	IIL	**Input Leakage Current(2,3)**					
DI50		I/O Pins 5V Tolerant(4)	-1	—	+1	μA	VSS ≤ VPIN ≤ VDD, pin at high-impedance
DI51		I/O Pins Not 5V Tolerant(4)	-1	—	+1	μA	VSS ≤ VPIN ≤ VDD, pin at high-impedance, -40°C ≤ TA ≤ +85°C
DI51a		I/O Pins Not 5V Tolerant(4)	-1	—	+1	μA	Analog pins shared with external reference pins, -40°C ≤ TA ≤ +85°C
DI51b		I/O Pins Not 5V Tolerant(4)	-1	—	+1	μA	VSS ≤ VPIN ≤ VDD, pin at high-impedance, -40°C ≤ TA ≤ +125°C
DI51c		I/O Pins Not 5V Tolerant(4)	-1	—	+1	μA	Analog pins shared with external reference pins, -40°C ≤ TA ≤ +125°C
DI55		$\overline{\text{MCLR}}$	-5	—	+5	μA	VSS ≤ VPIN ≤ VDD
DI56		OSC1	-5	—	+5	μA	VSS ≤ VPIN ≤ VDD, XT and HS modes

Note 1: Data in "Typ." column is at 3.3V, +25°C unless otherwise stated.

2: The leakage current on the $\overline{\text{MCLR}}$ pin is strongly dependent on the applied voltage level. The specified levels represent normal operating conditions. Higher leakage current can be measured at different input voltages.

3: Negative current is defined as current sourced by the pin.

4: See the **"Pin Diagrams"** section for the 5V tolerant I/O pins.

5: VIL Source < (VSS – 0.3). Characterized but not tested.

6: VIH Source > (VDD + 0.3) for pins that are not 5V tolerant only.

7: Digital 5V tolerant pins do not have internal high-side diodes to VDD and cannot tolerate any "positive" input injection current.

8: Injection Currents > | 0 | can affect the ADC results by approximately 4-6 counts.

9: Any number and/or combination of I/O pins not excluded under IICL or IICH conditions are permitted provided the mathematical "absolute instantaneous" sum of the input injection currents from all pins do not exceed the specified limit. Characterized but not tested.

TABLE 26-11: DC CHARACTERISTICS: I/O PIN INPUT SPECIFICATIONS (CONTINUED)

DC CHARACTERISTICS			Standard Operating Conditions: 3.0V to 3.6V (unless otherwise stated) Operating temperature -40°C ≤ TA ≤ +85°C for Industrial -40°C ≤ TA ≤ +125°C for Extended				
Param No.	**Symbol**	**Characteristic**	**Min.**	**Typ.(1)**	**Max.**	**Units**	**Conditions**
DI60a	I_{ICL}	**Input Low Injection Current**	0	—	-5(5,8)	mA	All pins except V_{DD}, V_{SS}, AV_{DD}, AV_{SS}, $\overline{MCLR}$, V_{CAP} and RB7
DI60b	I_{ICH}	**Input High Injection Current**	0	—	+5(6,7,8)	mA	All pins except V_{DD}, V_{SS}, AV_{DD}, AV_{SS}, $\overline{MCLR}$, V_{CAP}, RB7 and all 5V tolerant pins(7)
DI60c	$\sum I_{ICT}$	**Total Input Injection Current (sum of all I/O and control pins)**	-20(9)	—	+20(9)	mA	Absolute instantaneous sum of all ± input injection currents from all I/O pins (| I_{ICL} + | I_{ICH} |) ≤ $\sum I_{ICT}$

Note 1: Data in "Typ." column is at 3.3V, +25°C unless otherwise stated.

2: The leakage current on the $\overline{MCLR}$ pin is strongly dependent on the applied voltage level. The specified levels represent normal operating conditions. Higher leakage current can be measured at different input voltages.

3: Negative current is defined as current sourced by the pin.

4: See the **"Pin Diagrams"** section for the 5V tolerant I/O pins.

5: V_{IL} Source < (V_{SS} – 0.3). Characterized but not tested.

6: V_{IH} Source > (V_{DD} + 0.3) for pins that are not 5V tolerant only.

7: Digital 5V tolerant pins do not have internal high-side diodes to V_{DD} and cannot tolerate any "positive" input injection current.

8: Injection Currents > | 0 | can affect the ADC results by approximately 4-6 counts.

9: Any number and/or combination of I/O pins not excluded under I_{ICL} or I_{ICH} conditions are permitted provided the mathematical "absolute instantaneous" sum of the input injection currents from all pins do not exceed the specified limit. Characterized but not tested.

© 2013-2015 Microchip Technology Inc.

TABLE 26-12: DC CHARACTERISTICS: I/O PIN OUTPUT SPECIFICATIONS

DC CHARACTERISTICS			Standard Operating Conditions: 3.0V to 3.6V (unless otherwise stated) Operating temperature -40°C ≤ TA ≤ +85°C for Industrial -40°C ≤ TA ≤ +125°C for Extended				
Param.	**Symbol**	**Characteristic**	**Min.**	**Typ.**	**Max.**	**Units**	**Conditions**
DO10	VOL	**Output Low Voltage** 4x Sink Driver Pins(2)	—	—	0.4	V	VDD = 3.3V, IOL ≤ 6 mA, -40°C ≤ TA ≤ +85°C, IOL ≤ 5 mA, +85°C < TA ≤ +125°C
		Output Low Voltage 8x Sink Driver Pins(3)	—	—	0.4	V	VDD = 3.3V, IOL ≤ 12 mA, -40°C ≤ TA ≤ +85°C, IOL ≤ 8 mA, +85°C < TA ≤ +125°C
DO20	VOH	**Output High Voltage** 4x Source Driver Pins(2)	2.4	—	—	V	IOH ≥ -10 mA, VDD = 3.3V
		Output High Voltage 8x Source Driver Pins(3)	2.4	—	—	V	IOH ≥ -15 mA, VDD = 3.3V
DO20A	VOH1	**Output High Voltage** 4x Source Driver Pins(2)	1.5(1)	—	—	V	IOH ≥ -14 mA, VDD = 3.3V
			2.0(1)	—	—		IOH ≥ -12 mA, VDD = 3.3V
			3.0(1)	—	—		IOH ≥ -7 mA, VDD = 3.3V
		Output High Voltage 8x Source Driver Pins(3)	1.5(1)	—	—	V	IOH ≥ -22 mA, VDD = 3.3V
			2.0(1)	—	—		IOH ≥ -18 mA, VDD = 3.3V
			3.0(1)	—	—		IOH ≥ -10 mA, VDD = 3.3V

Note 1: Parameters are characterized but not tested.

2: Includes RA0-RA2, RB0-RB1, RB9-RB10, RC1-RC2, RC9-RC10, RC12 and RD7 pins.

3: Includes all I/O pins that are not 4x driver pins (see **Note 2**).

TABLE 26-13: ELECTRICAL CHARACTERISTICS: BOR

DC CHARACTERISTICS			Standard Operating Conditions (see Note 1): 3.0V to 3.6V (unless otherwise stated) Operating temperature -40°C ≤ TA ≤ +85°C for Industrial -40°C ≤ TA ≤ +125°C for Extended				
Param No.	**Symbol**	**Characteristic**	**Min.(2)**	**Typ.**	**Max.**	**Units**	**Conditions**
BO10	VBOR	BOR Event on VDD Transition High-to-Low	2.65	—	2.95	V	VDD **(Notes 2 and 3)**

Note 1: Device is functional at VBORMIN < VDD < VDDMIN, but will have degraded performance. Device functionality is tested, but not characterized. Analog modules (ADC, PGAs and comparators) may have degraded performance.

2: Parameters are for design guidance only and are not tested in manufacturing.

3: The VBOR specification is relative to VDD.

TABLE 26-14: DC CHARACTERISTICS: PROGRAM MEMORY

DC CHARACTERISTICS			Standard Operating Conditions: 3.0V to 3.6V (unless otherwise stated) Operating temperature -40°C ≤ TA ≤ +85°C for Industrial -40°C ≤ TA ≤ +125°C for Extended				
Param No.	**Symbol**	**Characteristic**	**Min.**	**Typ.(1)**	**Max.**	**Units**	**Conditions**
		Program Flash Memory					
D130	EP	Cell Endurance	10,000	—	—	E/W	-40°C to +125°C
D131	VPR	VDD for Read	3.0	—	3.6	V	
D132b	VPEW	VDD for Self-Timed Write	3.0	—	3.6	V	
D134	TRETD	Characteristic Retention	20	—	—	Year	Provided no other specifications are violated, -40°C to +125°C
D135	IDDP	Supply Current during Programming(2)	—	10	—	mA	
D136	IPEAK	Instantaneous Peak Current During Start-up	—	—	150	mA	
D137a	TPE	Page Erase Time	19.7	—	20.1	ms	TPE = 146893 FRC cycles, TA = +85°C (**Note 3**)
D137b	TPE	Page Erase Time	19.5	—	20.3	ms	TPE = 146893 FRC cycles, TA = +125°C (**Note 3**)
D138a	TWW	Word Write Cycle Time	46.5	—	47.3	μs	TWW = 346 FRC cycles, TA = +85°C (**Note 3**)
D138b	TWW	Word Write Cycle Time	46.0	—	47.9	μs	TWW = 346 FRC cycles, TA = +125°C (**Note 3**)
D139a	TRW	Row Write Time	667	—	679	μs	TRW = 4965 FRC cycles, TA = +85°C (**Note 3**)
D139b	TRW	Row Write Time	660	—	687	μs	TRW = 4965 FRC cycles, TA = +125°C (**Note 3**)

Note 1: Data in “Typ.” column is at 3.3V, +25°C unless otherwise stated.

2: Parameter characterized but not tested in manufacturing.

3: Other conditions: FRC = 7.37 MHz, TUN<5:0> = `011111` (for Minimum), TUN<5:0> = `100000` (for Maximum). This parameter depends on the FRC accuracy (see Table 26-20) and the value of the FRC Oscillator Tuning register (see Register 8-4). For complete details on calculating the Minimum and Maximum time, see **Section 5.3 “Programming Operations”**.

© 2013-2015 Microchip Technology Inc.

26.2 AC Characteristics and Timing Parameters

This section defines the dsPIC33EPXXGS50X family AC characteristics and timing parameters.

TABLE 26-15: TEMPERATURE AND VOLTAGE SPECIFICATIONS – AC

AC CHARACTERISTICS	**Standard Operating Conditions: 3.0V to 3.6V (unless otherwise stated)** Operating temperature -40°C ≤ TA ≤ +85°C for Industrial -40°C ≤ TA ≤ +125°C for Extended Operating voltage VDD range as described in **Section 26.1 "DC Characteristics"**.

FIGURE 26-1: LOAD CONDITIONS FOR DEVICE TIMING SPECIFICATIONS

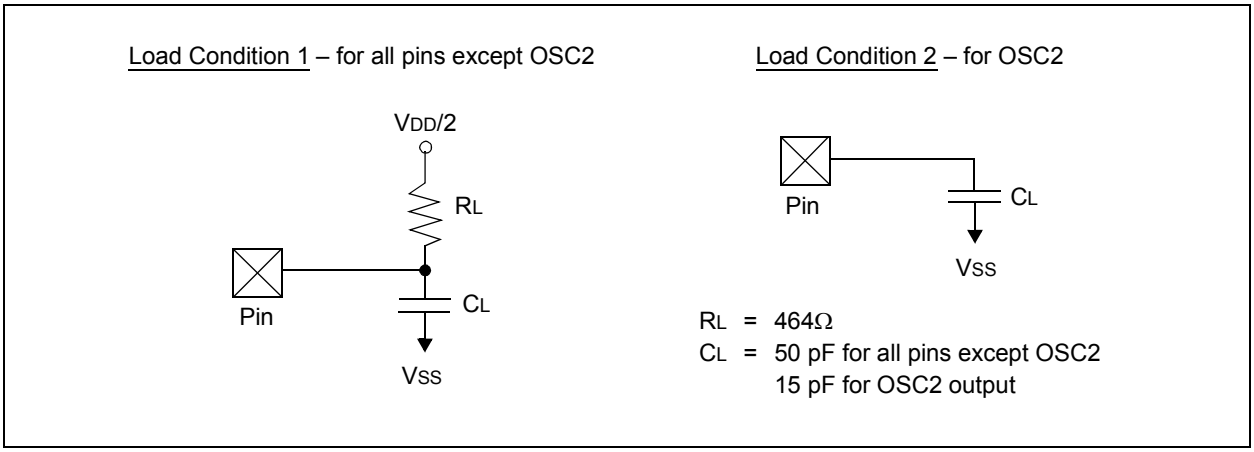

TABLE 26-16: CAPACITIVE LOADING REQUIREMENTS ON OUTPUT PINS

Param No.	Symbol	Characteristic	Min.	Typ.	Max.	Units	Conditions
DO50	COSCO	OSC2 Pin	—	—	15	pF	In XT and HS modes, when external clock is used to drive OSC1
DO56	CIO	All I/O Pins and OSC2	—	—	50	pF	EC mode
DO58	CB	SCLx, SDAx	—	—	400	pF	In I^{2}C™ mode

FIGURE 26-2: EXTERNAL CLOCK TIMING

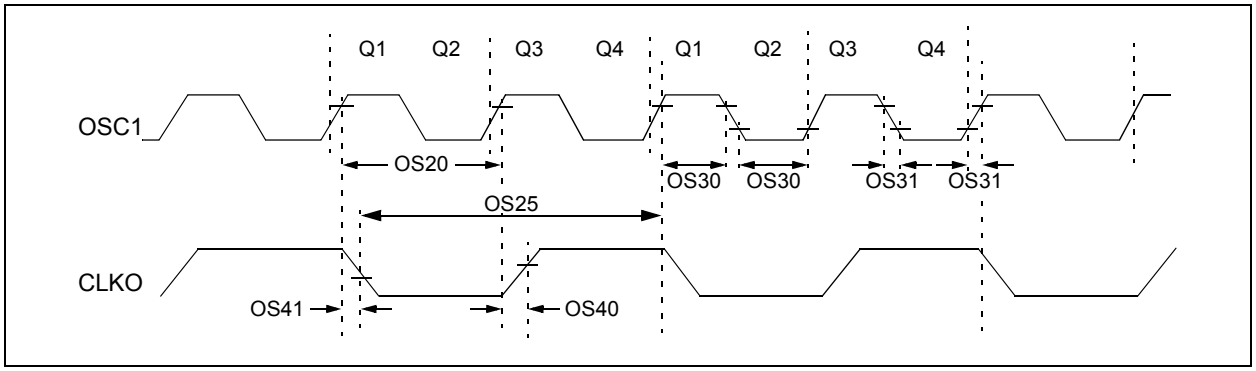

TABLE 26-17: EXTERNAL CLOCK TIMING REQUIREMENTS

AC CHARACTERISTICS			Standard Operating Conditions: 3.0V to 3.6V (unless otherwise stated) Operating temperature -40°C ≤ TA ≤ +85°C for Industrial -40°C ≤ TA ≤ +125°C for Extended				
Param No.	**Symb**	**Characteristic**	**Min.**	**Typ.(1)**	**Max.**	**Units**	**Conditions**
OS10	FIN	External CLKI Frequency (External clocks allowed only in EC and ECPLL modes)	DC	—	60	MHz	EC
		Oscillator Crystal Frequency	3.5 10	— —	10 40	MHz MHz	XT HS
OS20	TOSC	TOSC = 1/FOSC	8.33	—	DC	ns	+125°C
		TOSC = 1/FOSC	7.14	—	DC	ns	+85°C
OS25	TCY	Instruction Cycle Time(2)	16.67	—	DC	ns	+125°C
		Instruction Cycle Time(2)	14.28	—	DC	ns	+85°C
OS30	TosL, TosH	External Clock in (OSC1) High or Low Time	0.45 x TOSC	—	0.55 x TOSC	ns	EC
OS31	TosR, TosF	External Clock in (OSC1) Rise or Fall Time	—	—	20	ns	EC
OS40	TckR	CLKO Rise Time(3,4)	—	5.2	—	ns	
OS41	TckF	CLKO Fall Time(3,4)	—	5.2	—	ns	
OS42	GM	External Oscillator Transconductance(4)	—	12	—	mA/V	HS, VDD = 3.3V, TA = +25°C
			—	6	—	mA/V	XT, VDD = 3.3V, TA = +25°C

Note 1: Data in “Typ.” column is at 3.3V, +25°C unless otherwise stated.

2: Instruction cycle period (TCY) equals two times the input oscillator time base period. All specified values are based on characterization data for that particular oscillator type, under standard operating conditions, with the device executing code. Exceeding these specified limits may result in an unstable oscillator operation and/or higher than expected current consumption. All devices are tested to operate at “Minimum” values with an external clock applied to the OSC1 pin. When an external clock input is used, the “Maximum” cycle time limit is “DC” (no clock) for all devices.

3: Measurements are taken in EC mode. The CLKO signal is measured on the OSC2 pin.

4: This parameter is characterized but not tested in manufacturing.

© 2013-2015 Microchip Technology Inc.

TABLE 26-18: PLL CLOCK TIMING SPECIFICATIONS

AC CHARACTERISTICS			Standard Operating Conditions: 3.0V to 3.6V (unless otherwise stated) Operating temperature -40°C ≤ TA ≤ +85°C for Industrial -40°C ≤ TA ≤ +125°C for Extended				
Param No.	**Symbol**	**Characteristic**	**Min.**	**Typ.(1)**	**Max.**	**Units**	**Conditions**
OS50	FPLLI	PLL Voltage Controlled Oscillator (VCO) Input Frequency Range	0.8	—	8.0	MHz	ECPLL, XTPLL modes
OS51	FVCO	On-Chip VCO System Frequency	120	—	340	MHz	
OS52	TLOCK	PLL Start-up Time (Lock Time)	0.9	1.5	3.1	ms	
OS53	DCLK	CLKO Stability (Jitter)(2)	-3	0.5	3	%	

Note 1: Data in “Typ.” column is at 3.3V, +25°C unless otherwise stated. Parameters are for design guidance only and are not tested.

2: This jitter specification is based on clock cycle-by-clock cycle measurements. To get the effective jitter for individual time bases, or communication clocks used by the application, use the following formula:

$$Effective\ Jitter = \frac{D_{CLK}}{\sqrt{\frac{F_{OSC}}{Time\ Base\ or\ Communication\ Clock}}}$$

For example, if FOSC = 120 MHz and the SPIx bit rate = 10 MHz, the effective jitter is as follows:

$$Effective\ Jitter = \frac{D_{CLK}}{\sqrt{\frac{120}{10}}} = \frac{D_{CLK}}{\sqrt{12}} = \frac{D_{CLK}}{3.464}$$

TABLE 26-19: AUXILIARY PLL CLOCK TIMING SPECIFICATIONS

AC CHARACTERISTICS			Standard Operating Conditions: 3.0V to 3.6V (unless otherwise stated) Operating temperature -40°C ≤ TA ≤ +85°C for Industrial -40°C ≤ TA ≤ +125°C for Extended				
Param No.	**Symbol**	**Characteristic**	**Min**	**Typ(1)**	**Max**	**Units**	**Conditions**
OS56	FHPOUT	On-Chip 16x PLL CCO Frequency	112	118	120	MHz	
OS57	FHPIN	On-Chip 16x PLL Phase Detector Input Frequency	7.0	7.37	7.5	MHz	
OS58	TSU	Frequency Generator Lock Time	—	—	10	μs	

Note 1: Data in “Typ” column is at 3.3V, +25°C unless otherwise stated. Parameters are for design guidance only and are not tested in manufacturing.

TABLE 26-20: INTERNAL FRC ACCURACY

AC CHARACTERISTICS		Standard Operating Conditions: 3.0V to 3.6V (unless otherwise stated) Operating temperature -40°C ≤ TA ≤ +85°C for Industrial -40°C ≤ TA ≤ +125°C for Extended					
Param No.	**Characteristic**	**Min.**	**Typ.**	**Max.**	**Units**	**Conditions**	
Internal FRC Accuracy @ FRC Frequency = 7.37 MHz(1)							
F20a	FRC	-2	0.5	+2	%	-40°C ≤ TA ≤ -10°C	VDD = 3.0-3.6V
		-0.9	0.5	+0.9	%	-10°C ≤ TA ≤ +85°C	VDD = 3.0-3.6V
F20b	FRC	-2	1	+2	%	+85°C ≤ TA ≤ +125°C	VDD = 3.0-3.6V

Note 1: Frequency is calibrated at +25°C and 3.3V. TUNx bits can be used to compensate for temperature drift.

TABLE 26-21: INTERNAL LPRC ACCURACY

AC CHARACTERISTICS		Standard Operating Conditions: 3.0V to 3.6V (unless otherwise stated) Operating temperature -40°C ≤ TA ≤ +85°C for Industrial -40°C ≤ TA ≤ +125°C for Extended					
Param No.	**Characteristic**	**Min.**	**Typ.**	**Max.**	**Units**	**Conditions**	
LPRC @ 32.768 kHz(1)							
F21a	LPRC	-30	—	+30	%	-40°C ≤ TA ≤ -10°C	VDD = 3.0-3.6V
		-20	—	+20	%	-10°C ≤ TA ≤ +85°C	VDD = 3.0-3.6V
F21b	LPRC	-30	—	+30	%	+85°C ≤ TA ≤ +125°C	VDD = 3.0-3.6V

Note 1: This is the change of the LPRC frequency as VDD changes.

© 2013-2015 Microchip Technology Inc.

FIGURE 26-3: I/O TIMING CHARACTERISTICS

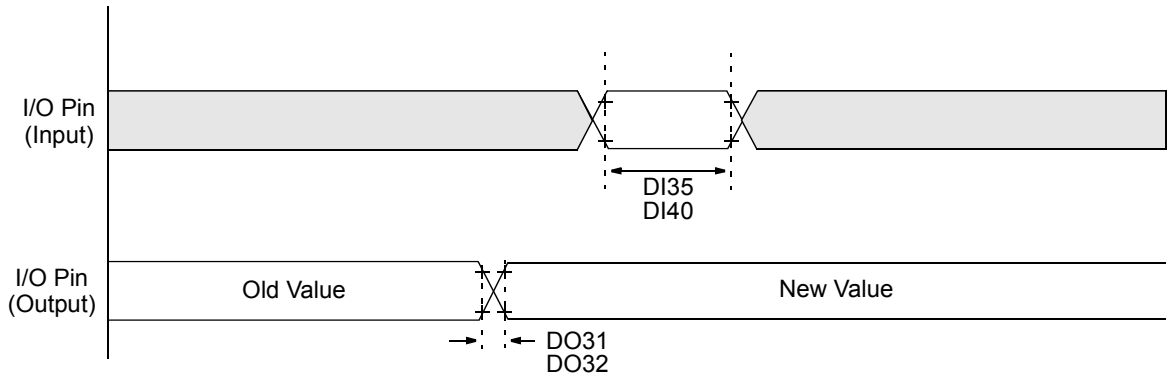

Note: Refer to Figure 26-1 for load conditions.

TABLE 26-22: I/O TIMING REQUIREMENTS

AC CHARACTERISTICS			Standard Operating Conditions: 3.0V to 3.6V (unless otherwise stated) Operating temperature -40°C ≤ TA ≤ +85°C for Industrial -40°C ≤ TA ≤ +125°C for Extended				
Param No.	**Symbol**	**Characteristic**	**Min.**	**Typ.(1)**	**Max.**	**Units**	**Conditions**
DO31	TIOR	Port Output Rise Time	—	5	10	ns	
DO32	TIOF	Port Output Fall Time	—	5	10	ns	
DI35	TINP	INTx Pin High or Low Time (input)	20	—	—	ns	
DI40	TRBP	CNx High or Low Time (input)	2	—	—	TCY	

Note 1: Data in “Typ.” column is at 3.3V, +25°C unless otherwise stated.

FIGURE 26-4: BOR AND MASTER CLEAR RESET TIMING CHARACTERISTICS

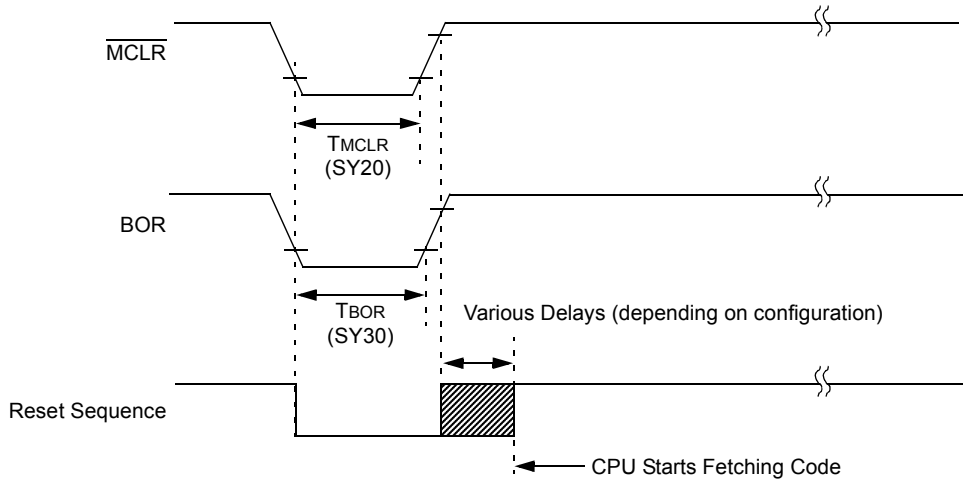

TABLE 26-23: RESET, WATCHDOG TIMER, OSCILLATOR START-UP TIMER, POWER-UP TIMER TIMING REQUIREMENTS

AC CHARACTERISTICS			Standard Operating Conditions: 3.0V to 3.6V (unless otherwise stated) Operating temperature -40°C ≤ TA ≤ +85°C for Industrial -40°C ≤ TA ≤ +125°C for Extended				
Param No.	**Symbol**	**Characteristic(1)**	**Min.**	**Typ.(2)**	**Max.**	**Units**	**Conditions**
SY00	TPU	Power-up Period	—	400	600	μs	
SY10	TOST	Oscillator Start-up Time	—	1024 TOSC	—	—	TOSC = OSC1 period
SY12	TWDT	Watchdog Timer Time-out Period	0.81	—	1.22	ms	WDTPRE = 0, WDTPOST<3:0> = 0000, using LPRC tolerances indicated in F21 (see Table 26-21) at +85°C
			3.25	—	4.88	ms	WDTPRE = 1, WDTPOST<3:0> = 0000, using LPRC tolerances indicated in F21 (see Table 26-21) at +85°C
SY13	TIOZ	I/O High-Impedance from $\overline{\text{MCLR}}$ Low or Watchdog Timer Reset	0.68	0.72	1.2	μs	
SY20	TMCLR	$\overline{\text{MCLR}}$ Pulse Width (low)	2	—	—	μs	
SY30	TBOR	BOR Pulse Width (low)	1	—	—	μs	
SY35	TFSCM	Fail-Safe Clock Monitor Delay	—	500	900	μs	-40°C to +85°C
SY36	TVREG	Voltage Regulator Standby-to-Active mode Transition Time	—	—	30	μs	
SY37	TOSCDFRC	FRC Oscillator Start-up Delay	—	48	—	μs	
SY38	TOSCDLPRC	LPRC Oscillator Start-up Delay	—	—	70	μs	

Note 1: These parameters are characterized but not tested in manufacturing.

2: Data in “Typ.” column is at 3.3V, +25°C unless otherwise stated.

© 2013-2015 Microchip Technology Inc.

FIGURE 26-5: TIMER1-TIMER5 EXTERNAL CLOCK TIMING CHARACTERISTICS

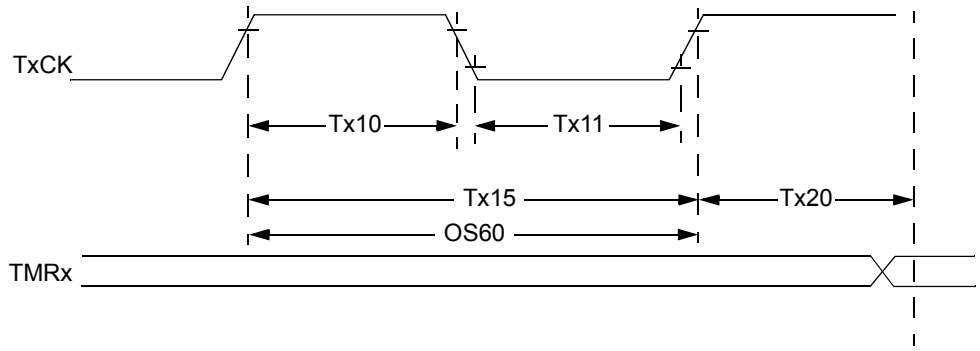

Note: Refer to Figure 26-1 for load conditions.

TABLE 26-24: TIMER1 EXTERNAL CLOCK TIMING REQUIREMENTS(1)

AC CHARACTERISTICS				Standard Operating Conditions: 3.0V to 3.6V (unless otherwise stated) Operating temperature -40°C ≤ TA ≤ +85°C for Industrial -40°C ≤ TA ≤ +125°C for Extended				
Param No.	**Symbol**	**Characteristic(2)**		**Min.**	**Typ.**	**Max.**	**Units**	**Conditions**
TA10	TTXH	T1CK High Time	Synchronous mode	Greater of: 20 or (TCY + 20)/N	—	—	ns	Must also meet Parameter TA15, N = Prescale Value (1, 8, 64, 256)
			Asynchronous	35	—	—	ns	
TA11	TTXL	T1CK Low Time	Synchronous mode	Greater of: 20 or (TCY + 20)/N	—	—	ns	Must also meet Parameter TA15, N = Prescale Value (1, 8, 64, 256)
			Asynchronous	10	—	—	ns	
TA15	TTXP	T1CK Input Period	Synchronous mode	Greater of: 40 or (2 TCY + 40)/N	—	—	ns	N = Prescale Value (1, 8, 64, 256)
OS60	Ft1	T1CK Oscillator Input Frequency Range (oscillator enabled by setting bit, TCS (T1CON<1>))		DC	—	50	kHz	
TA20	TCKEXTMRL	Delay from External T1CK Clock Edge to Timer Increment		0.75 TCY + 40	—	1.75 TCY + 40	ns	

Note 1: Timer1 is a Type A timer.

2: These parameters are characterized but not tested in manufacturing.

TABLE 26-25: TIMER2 AND TIMER4 (TYPE B TIMER) EXTERNAL CLOCK TIMING REQUIREMENTS

AC CHARACTERISTICS				Standard Operating Conditions: 3.0V to 3.6V (unless otherwise stated) Operating temperature -40°C ≤ TA ≤ +85°C for Industrial -40°C ≤ TA ≤ +125°C for Extended				
Param No.	**Symbol**	**Characteristic(1)**		**Min.**	**Typ.**	**Max.**	**Units**	**Conditions**
TB10	TtxH	TxCK High Time	Synchronous mode	Greater of: 20 or (TCY + 20)/N	—	—	ns	Must also meet Parameter TB15, N = Prescale Value (1, 8, 64, 256)
TB11	TtxL	TxCK Low Time	Synchronous mode	Greater of: 20 or (TCY + 20)/N	—	—	ns	Must also meet Parameter TB15, N = Prescale Value (1, 8, 64, 256)
TB15	TtxP	TxCK Input Period	Synchronous mode	Greater of: 40 or (2 TCY + 40)/N	—	—	ns	N = Prescale Value (1, 8, 64, 256)
TB20	TCKEXTMRL	Delay from External TxCK Clock Edge to Timer Increment		0.75 TCY + 40	—	1.75 TCY + 40	ns	

Note 1: These parameters are characterized but not tested in manufacturing.

TABLE 26-26: TIMER3 AND TIMER5 (TYPE C TIMER) EXTERNAL CLOCK TIMING REQUIREMENTS

AC CHARACTERISTICS				Standard Operating Conditions: 3.0V to 3.6V (unless otherwise stated) Operating temperature -40°C ≤ TA ≤ +85°C for Industrial -40°C ≤ TA ≤ +125°C for Extended				
Param No.	**Symbol**	**Characteristic(1)**		**Min.**	**Typ.**	**Max.**	**Units**	**Conditions**
TC10	TtxH	TxCK High Time	Synchronous	TCY + 20	—	—	ns	Must also meet Parameter TC15
TC11	TtxL	TxCK Low Time	Synchronous	TCY + 20	—	—	ns	Must also meet Parameter TC15
TC15	TtxP	TxCK Input Period	Synchronous with Prescaler	2 TCY + 40	—	—	ns	N = Prescale Value (1, 8, 64, 256)
TC20	TCKEXTMRL	Delay from External TxCK Clock Edge to Timer Increment		0.75 TCY + 40	—	1.75 TCY + 40	ns	

Note 1: These parameters are characterized but not tested in manufacturing.

© 2013-2015 Microchip Technology Inc.

FIGURE 26-6: INPUT CAPTURE x (ICx) TIMING CHARACTERISTICS

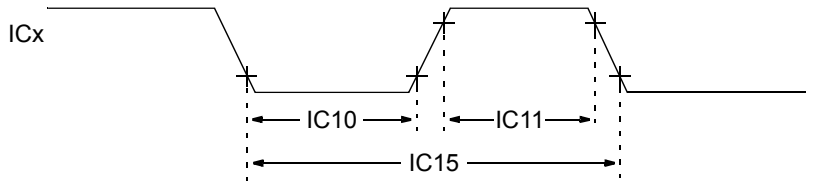

Note: Refer to Figure 26-1 for load conditions.

TABLE 26-27: INPUT CAPTURE x MODULE TIMING REQUIREMENTS

AC CHARACTERISTICS			Standard Operating Conditions: 3.0V to 3.6V (unless otherwise stated) Operating temperature -40°C ≤ TA ≤ +85°C for Industrial -40°C ≤ TA ≤ +125°C for Extended				
Param. No.	**Symbol**	**Characteristics(1)**	**Min.**	**Max.**	**Units**	**Conditions**	
IC10	TCCL	ICx Input Low Time	Greater of: 12.5 + 25 or (0.5 TCY/N) + 25	—	ns	Must also meet Parameter IC15	N = Prescale Value (1, 4, 16)
IC11	TCCH	ICx Input High Time	Greater of: 12.5 + 25 or (0.5 TCY/N) + 25	—	ns	Must also meet Parameter IC15	
IC15	TCCP	ICx Input Period	Greater of: 25 + 50 or (1 TCY/N) + 50	—	ns		

Note 1: These parameters are characterized but not tested in manufacturing.

FIGURE 26-7: OUTPUT COMPARE x MODULE (OCx) TIMING CHARACTERISTICS

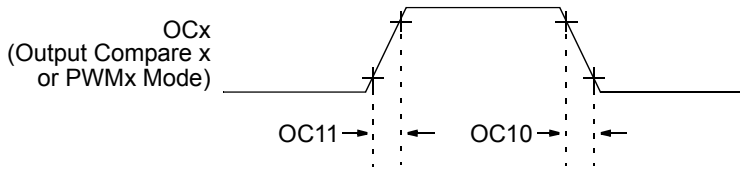

Note: Refer to Figure 26-1 for load conditions.

TABLE 26-28: OUTPUT COMPARE x MODULE TIMING REQUIREMENTS

AC CHARACTERISTICS			Standard Operating Conditions: 3.0V to 3.6V (unless otherwise stated) Operating temperature -40°C ≤ TA ≤ +85°C for Industrial -40°C ≤ TA ≤ +125°C for Extended				
Param No.	**Symbol**	**Characteristic(1)**	**Min.**	**Typ.**	**Max.**	**Units**	**Conditions**
OC10	TccF	OCx Output Fall Time	—	—	—	ns	See Parameter DO32
OC11	TccR	OCx Output Rise Time	—	—	—	ns	See Parameter DO31

Note 1: These parameters are characterized but not tested in manufacturing.

FIGURE 26-8: OCx/PWMx MODULE TIMING CHARACTERISTICS

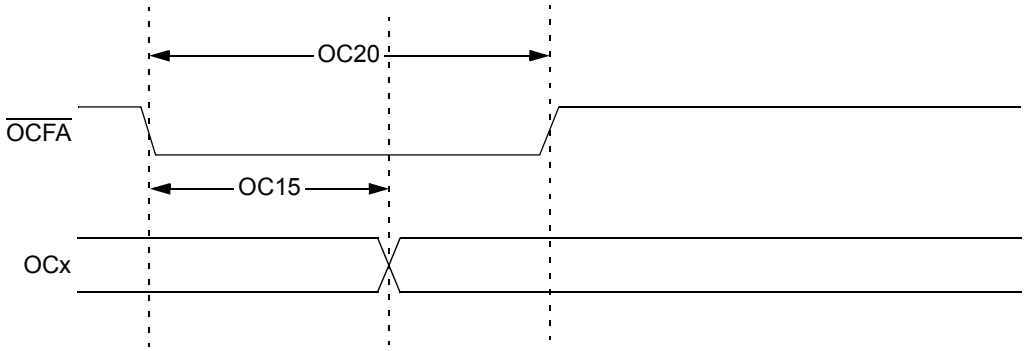

TABLE 26-29: OCx/PWMx MODE TIMING REQUIREMENTS

AC CHARACTERISTICS			Standard Operating Conditions: 3.0V to 3.6V (unless otherwise stated) Operating temperature -40°C ≤ TA ≤ +85°C for Industrial -40°C ≤ TA ≤ +125°C for Extended				
Param No.	**Symbol**	**Characteristic(1)**	**Min.**	**Typ.**	**Max.**	**Units**	**Conditions**
OC15	TFD	Fault Input to PWMx I/O Change	—	—	TCY + 20	ns	
OC20	TFLT	Fault Input Pulse Width	TCY + 20	—	—	ns	

Note 1: These parameters are characterized but not tested in manufacturing.

© 2013-2015 Microchip Technology Inc.

FIGURE 26-9: HIGH-SPEED PWMx MODULE FAULT TIMING CHARACTERISTICS

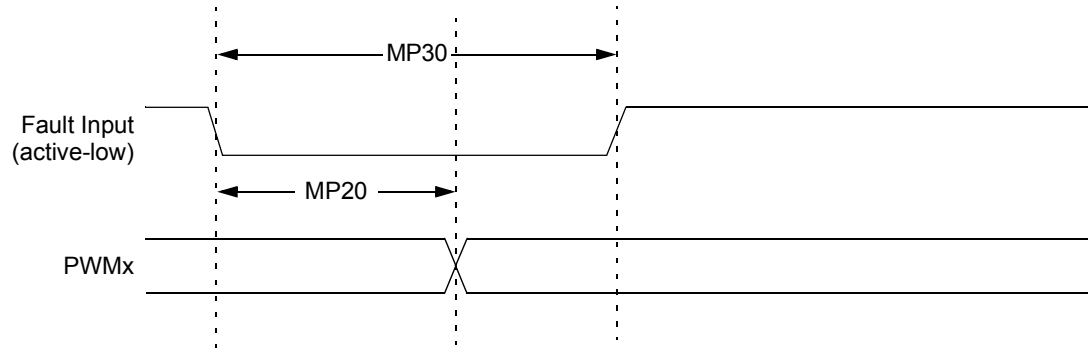

FIGURE 26-10: HIGH-SPEED PWMx MODULE TIMING CHARACTERISTICS

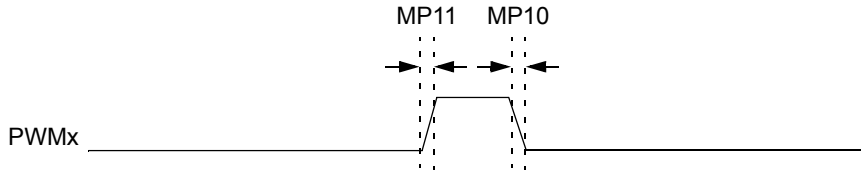

Note: Refer to Figure 26-1 for load conditions.

TABLE 26-30: HIGH-SPEED PWMx MODULE TIMING REQUIREMENTS

AC CHARACTERISTICS			Standard Operating Conditions: 3.0V to 3.6V (unless otherwise stated) Operating temperature -40°C ≤ TA ≤ +85°C for Industrial -40°C ≤ TA ≤ +125°C for Extended				
Param No.	**Symbol**	**Characteristic(1)**	**Min.**	**Typ.**	**Max.**	**Units**	**Conditions**
MP10	TFPWM	PWMx Output Fall Time	—	—	—	ns	See Parameter DO32
MP11	TRPWM	PWMx Output Rise Time	—	—	—	ns	See Parameter DO31
MP20	TFD	Fault Input ↓ to PWMx I/O Change	—	—	15	ns	
MP30	TFH	Fault Input Pulse Width	15	—	—	ns	

Note 1: These parameters are characterized but not tested in manufacturing.

TABLE 26-31: SPIx MAXIMUM DATA/CLOCK RATE SUMMARY

AC CHARACTERISTICS			Standard Operating Conditions: 3.0V to 3.6V (unless otherwise stated) Operating temperature -40°C ≤ TA ≤ +85°C for Industrial -40°C ≤ TA ≤ +125°C for Extended			
Maximum Data Rate	**Master Transmit Only (Half-Duplex)**	**Master Transmit/Receive (Full-Duplex)**	**Slave Transmit/Receive (Full-Duplex)**	**CKE**	**CKP**	**SMP**
15 MHz	Table 26-31	—	—	0,1	0,1	0,1
9 MHz	—	Table 26-32	—	1	0,1	1
9 MHz	—	Table 26-33	—	0	0,1	1
15 MHz	—	—	Table 26-34	1	0	0
11 MHz	—	—	Table 26-35	1	1	0
15 MHz	—	—	Table 26-36	0	1	0
11 MHz	—	—	Table 26-37	0	0	0

FIGURE 26-11: SPIx MASTER MODE (HALF-DUPLEX, TRANSMIT ONLY, CKE = 0) TIMING CHARACTERISTICS

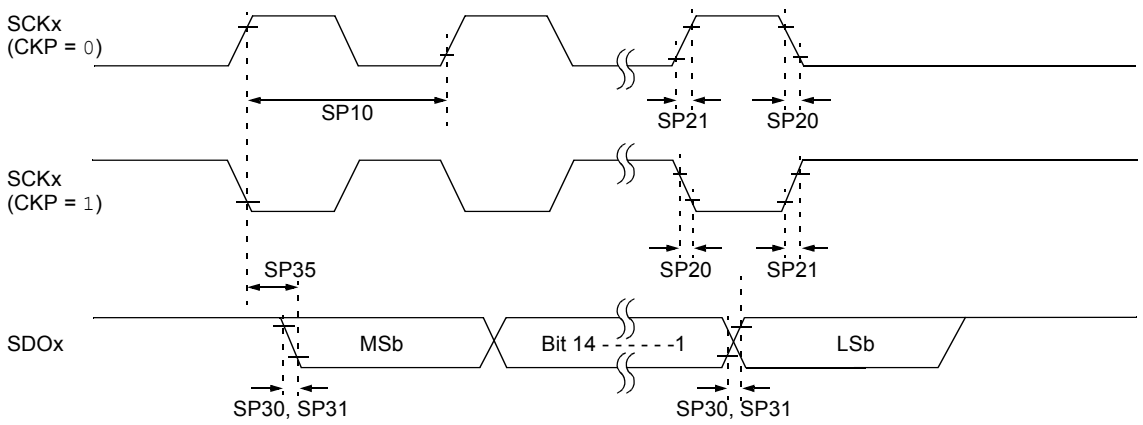

Note: Refer to Figure 26-1 for load conditions.

© 2013-2015 Microchip Technology Inc.

FIGURE 26-12: SPIx MASTER MODE (HALF-DUPLEX, TRANSMIT ONLY, CKE = 1) TIMING CHARACTERISTICS

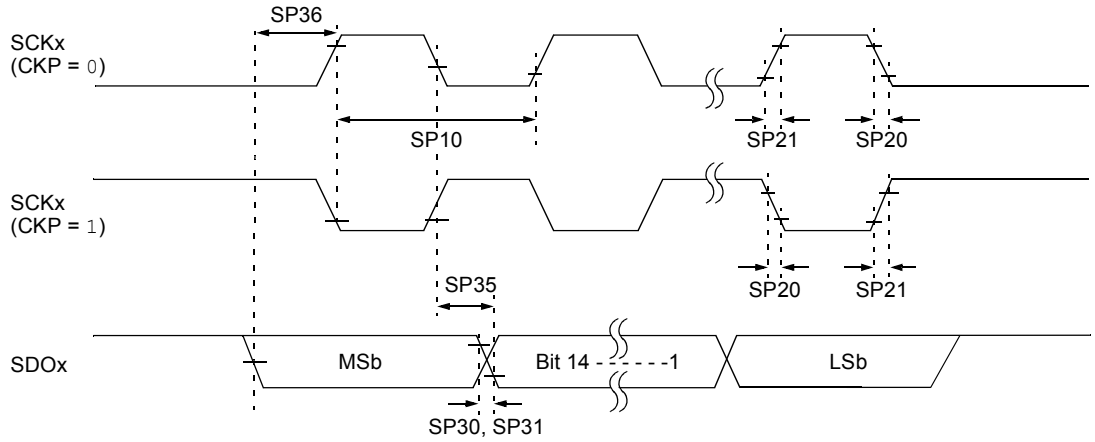

Note: Refer to Figure 26-1 for load conditions.

TABLE 26-32: SPIx MASTER MODE (HALF-DUPLEX, TRANSMIT ONLY) TIMING REQUIREMENTS

AC CHARACTERISTICS			Standard Operating Conditions: 3.0V to 3.6V (unless otherwise stated) Operating temperature -40°C ≤ TA ≤ +85°C for Industrial -40°C ≤ TA ≤ +125°C for Extended				
Param No.	**Symbol**	**Characteristic(1)**	**Min.**	**Typ.(2)**	**Max.**	**Units**	**Conditions**
SP10	FscP	Maximum SCKx Frequency	—	—	15	MHz	**(Note 3)**
SP20	TscF	SCKx Output Fall Time	—	—	—	ns	See Parameter DO32 **(Note 4)**
SP21	TscR	SCKx Output Rise Time	—	—	—	ns	See Parameter DO31 **(Note 4)**
SP30	TdoF	SDOx Data Output Fall Time	—	—	—	ns	See Parameter DO32 **(Note 4)**
SP31	TdoR	SDOx Data Output Rise Time	—	—	—	ns	See Parameter DO31 **(Note 4)**
SP35	TscH2doV, TscL2doV	SDOx Data Output Valid After SCKx Edge	—	6	20	ns	
SP36	TdiV2scH, TdiV2scL	SDOx Data Output Setup to First SCKx Edge	30	—	—	ns	

Note 1: These parameters are characterized but not tested in manufacturing.

2: Data in "Typ." column is at 3.3V, +25°C unless otherwise stated.

3: The minimum clock period for SCKx is 66.7 ns. Therefore, the clock generated in Master mode must not violate this specification.

4: Assumes 50 pF load on all SPIx pins.

FIGURE 26-13: SPIx MASTER MODE (FULL-DUPLEX, CKE = 1, CKP = x, SMP = 1) TIMING CHARACTERISTICS

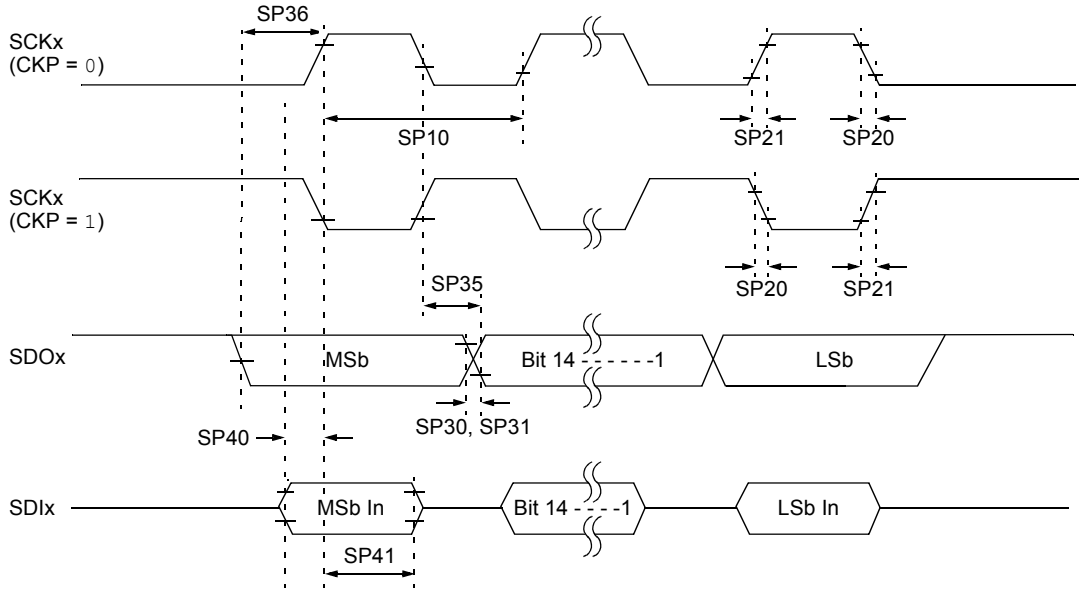

Note: Refer to Figure 26-1 for load conditions.

TABLE 26-33: SPIx MASTER MODE (FULL-DUPLEX, CKE = 1, CKP = x, SMP = 1) TIMING REQUIREMENTS

AC CHARACTERISTICS			Standard Operating Conditions: 3.0V to 3.6V (unless otherwise stated) Operating temperature -40°C ≤ TA ≤ +85°C for Industrial -40°C ≤ TA ≤ +125°C for Extended				
Param No.	**Symbol**	**Characteristic(1)**	**Min.**	**Typ.(2)**	**Max.**	**Units**	**Conditions**
SP10	FscP	Maximum SCKx Frequency	—	—	9	MHz	(**Note 3**)
SP20	TscF	SCKx Output Fall Time	—	—	—	ns	See Parameter DO32 (**Note 4**)
SP21	TscR	SCKx Output Rise Time	—	—	—	ns	See Parameter DO31 (**Note 4**)
SP30	TdoF	SDOx Data Output Fall Time	—	—	—	ns	See Parameter DO32 (**Note 4**)
SP31	TdoR	SDOx Data Output Rise Time	—	—	—	ns	See Parameter DO31 (**Note 4**)
SP35	TscH2doV, TscL2doV	SDOx Data Output Valid After SCKx Edge	—	6	20	ns	
SP36	TdoV2sc, TdoV2scL	SDOx Data Output Setup to First SCKx Edge	30	—	—	ns	
SP40	TdiV2scH, TdiV2scL	Setup Time of SDIx Data Input to SCKx Edge	30	—	—	ns	
SP41	TscH2diL, TscL2diL	Hold Time of SDIx Data Input to SCKx Edge	30	—	—	ns	

Note 1: These parameters are characterized but not tested in manufacturing.

2: Data in "Typ." column is at 3.3V, +25°C unless otherwise stated.

3: The minimum clock period for SCKx is 111 ns. The clock generated in Master mode must not violate this specification.

4: Assumes 50 pF load on all SPIx pins.

© 2013-2015 Microchip Technology Inc.

FIGURE 26-14: SPIx MASTER MODE (FULL-DUPLEX, CKE = 0, CKP = x, SMP = 1) TIMING CHARACTERISTICS

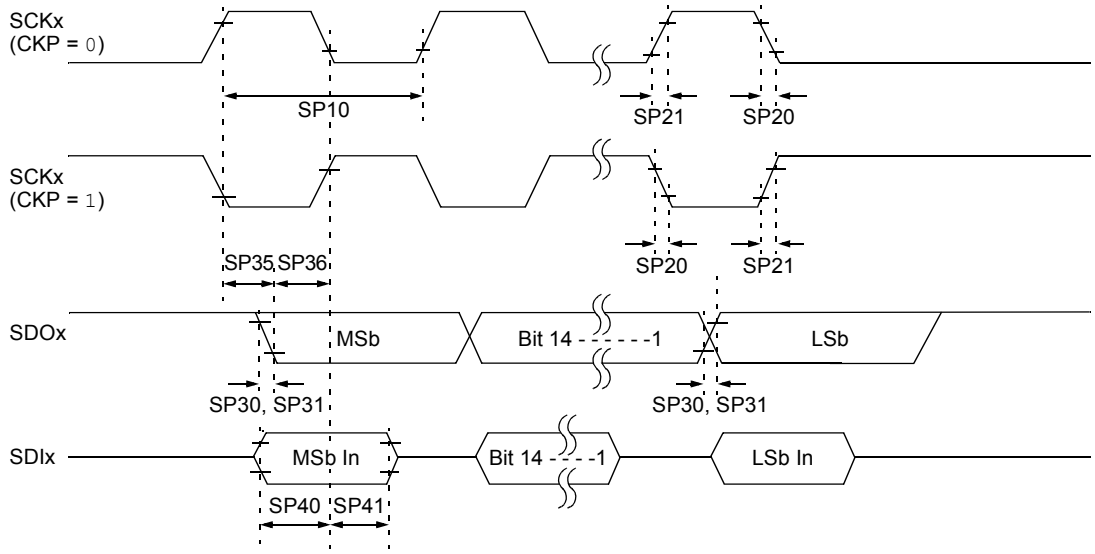

Note: Refer to Figure 26-1 for load conditions.

TABLE 26-34: SPIx MASTER MODE (FULL-DUPLEX, CKE = 0, CKP = x, SMP = 1) TIMING REQUIREMENTS

AC CHARACTERISTICS			Standard Operating Conditions: 3.0V to 3.6V (unless otherwise stated) Operating temperature -40°C ≤ TA ≤ +85°C for Industrial -40°C ≤ TA ≤ +125°C for Extended				
Param No.	**Symbol**	**Characteristic(1)**	**Min.**	**Typ.(2)**	**Max.**	**Units**	**Conditions**
SP10	FscP	Maximum SCKx Frequency	—	—	9	MHz	-40°C to +125°C (**Note 3**)
SP20	TscF	SCKx Output Fall Time	—	—	—	ns	See Parameter DO32 (**Note 4**)
SP21	TscR	SCKx Output Rise Time	—	—	—	ns	See Parameter DO31 (**Note 4**)
SP30	TdoF	SDOx Data Output Fall Time	—	—	—	ns	See Parameter DO32 (**Note 4**)
SP31	TdoR	SDOx Data Output Rise Time	—	—	—	ns	See Parameter DO31 (**Note 4**)
SP35	TscH2doV, TscL2doV	SDOx Data Output Valid After SCKx Edge	—	6	20	ns	
SP36	TdoV2scH, TdoV2scL	SDOx Data Output Setup to First SCKx Edge	30	—	—	ns	
SP40	TdiV2scH, TdiV2scL	Setup Time of SDIx Data Input to SCKx Edge	30	—	—	ns	
SP41	TscH2diL, TscL2diL	Hold Time of SDIx Data Input to SCKx Edge	30	—	—	ns	

Note 1: These parameters are characterized but not tested in manufacturing.

2: Data in “Typ.” column is at 3.3V, +25°C unless otherwise stated.

3: The minimum clock period for SCKx is 111 ns. The clock generated in Master mode must not violate this specification.

4: Assumes 50 pF load on all SPIx pins.

FIGURE 26-15: SPIx SLAVE MODE (FULL-DUPLEX, CKE = 1, CKP = 0, SMP = 0) TIMING CHARACTERISTICS

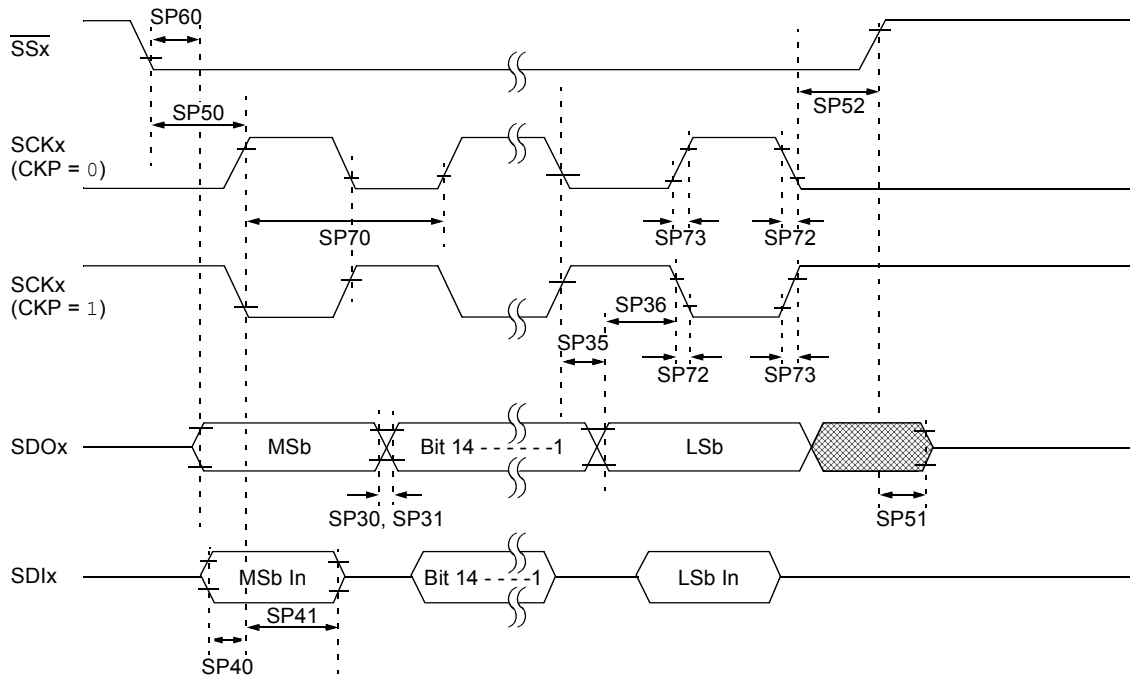

Note: Refer to Figure 26-1 for load conditions.

© 2013-2015 Microchip Technology Inc.

TABLE 26-35: SPIx SLAVE MODE (FULL-DUPLEX, CKE = 1, CKP = 0, SMP = 0) TIMING REQUIREMENTS

AC CHARACTERISTICS			Standard Operating Conditions: 3.0V to 3.6V (unless otherwise stated) Operating temperature -40°C ≤ TA ≤ +85°C for Industrial -40°C ≤ TA ≤ +125°C for Extended				
Param No.	**Symbol**	**Characteristic(1)**	**Min.**	**Typ.(2)**	**Max.**	**Units**	**Conditions**
SP70	FscP	Maximum SCKx Input Frequency	—	—	Lesser of: FP or 15	MHz	(Note 3)
SP72	TscF	SCKx Input Fall Time	—	—	—	ns	See Parameter DO32 (Note 4)
SP73	TscR	SCKx Input Rise Time	—	—	—	ns	See Parameter DO31 (Note 4)
SP30	TdoF	SDOx Data Output Fall Time	—	—	—	ns	See Parameter DO32 (Note 4)
SP31	TdoR	SDOx Data Output Rise Time	—	—	—	ns	See Parameter DO31 (Note 4)
SP35	TscH2doV, TscL2doV	SDOx Data Output Valid After SCKx Edge	—	6	20	ns	
SP36	TdoV2scH, TdoV2scL	SDOx Data Output Setup to First SCKx Edge	30	—	—	ns	
SP40	TdiV2scH, TdiV2scL	Setup Time of SDIx Data Input to SCKx Edge	30	—	—	ns	
SP41	TscH2diL, TscL2diL	Hold Time of SDIx Data Input to SCKx Edge	30	—	—	ns	
SP50	TssL2scH, TssL2scL	$\overline{SSx}$ ↓ to SCKx ↑ or SCKx ↓ Input	120	—	—	ns	
SP51	TssH2doZ	$\overline{SSx}$ ↑ to SDOx Output High-Impedance	10	—	50	ns	(Note 4)
SP52	TscH2ssH, TscL2ssH	$\overline{SSx}$ ↑ after SCKx Edge	1.5 TCY + 40	—	—	ns	(Note 4)
SP60	TssL2doV	SDOx Data Output Valid After $\overline{SSx}$ Edge	—	—	50	ns	

Note 1: These parameters are characterized but not tested in manufacturing.

2: Data in “Typ.” column is at 3.3V, +25°C unless otherwise stated.

3: The minimum clock period for SCKx is 66.7 ns. Therefore, the SCKx clock generated by the master must not violate this specification.

4: Assumes 50 pF load on all SPIx pins.

FIGURE 26-16: SPIx SLAVE MODE (FULL-DUPLEX, CKE = 1, CKP = 1, SMP = 0) TIMING CHARACTERISTICS

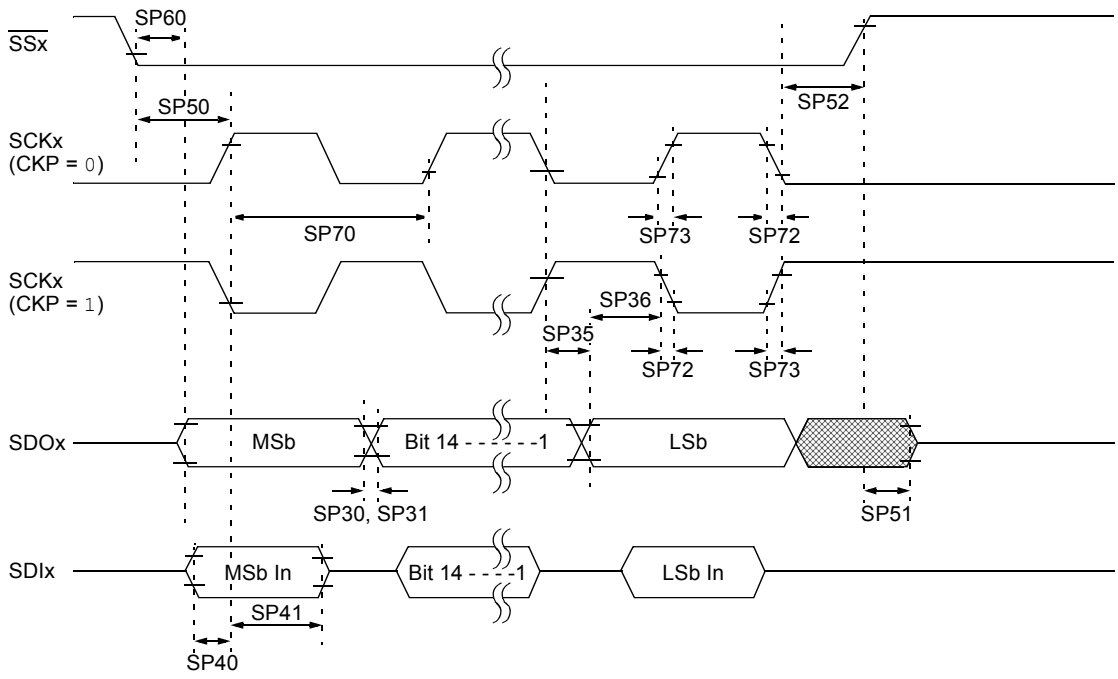

Note: Refer to Figure 26-1 for load conditions.

© 2013-2015 Microchip Technology Inc.

TABLE 26-36: SPIx SLAVE MODE (FULL-DUPLEX, CKE = 1, CKP = 1, SMP = 0) TIMING REQUIREMENTS

AC CHARACTERISTICS			Standard Operating Conditions: 3.0V to 3.6V (unless otherwise stated) Operating temperature -40°C ≤ TA ≤ +85°C for Industrial -40°C ≤ TA ≤ +125°C for Extended				
Param No.	**Symbol**	**Characteristic(1)**	**Min.**	**Typ.(2)**	**Max.**	**Units**	**Conditions**
SP70	FscP	Maximum SCKx Input Frequency	—	—	Lesser of: FP or 11	MHz	**(Note 3)**
SP72	TscF	SCKx Input Fall Time	—	—	—	ns	See Parameter DO32 **(Note 4)**
SP73	TscR	SCKx Input Rise Time	—	—	—	ns	See Parameter DO31 **(Note 4)**
SP30	TdoF	SDOx Data Output Fall Time	—	—	—	ns	See Parameter DO32 **(Note 4)**
SP31	TdoR	SDOx Data Output Rise Time	—	—	—	ns	See Parameter DO31 **(Note 4)**
SP35	TscH2doV, TscL2doV	SDOx Data Output Valid After SCKx Edge	—	6	20	ns	
SP36	TdoV2scH, TdoV2scL	SDOx Data Output Setup to First SCKx Edge	30	—	—	ns	
SP40	TdiV2scH, TdiV2scL	Setup Time of SDIx Data Input to SCKx Edge	30	—	—	ns	
SP41	TscH2diL, TscL2diL	Hold Time of SDIx Data Input to SCKx Edge	30	—	—	ns	
SP50	TssL2scH, TssL2scL	$\overline{SSx}$ ↓ to SCKx ↑ or SCKx ↓ Input	120	—	—	ns	
SP51	TssH2doZ	$\overline{SSx}$ ↑ to SDOx Output High-Impedance	10	—	50	ns	**(Note 4)**
SP52	TscH2ssH, TscL2ssH	$\overline{SSx}$ ↑ after SCKx Edge	1.5 TCY + 40	—	—	ns	**(Note 4)**
SP60	TssL2doV	SDOx Data Output Valid after $\overline{SSx}$ Edge	—	—	50	ns	

Note 1: These parameters are characterized but not tested in manufacturing.

2: Data in “Typ.” column is at 3.3V, +25°C unless otherwise stated.

3: The minimum clock period for SCKx is 91 ns. Therefore, the SCKx clock generated by the master must not violate this specification.

4: Assumes 50 pF load on all SPIx pins.

FIGURE 26-17: SPIx SLAVE MODE (FULL-DUPLEX, CKE = 0, CKP = 1, SMP = 0) TIMING CHARACTERISTICS

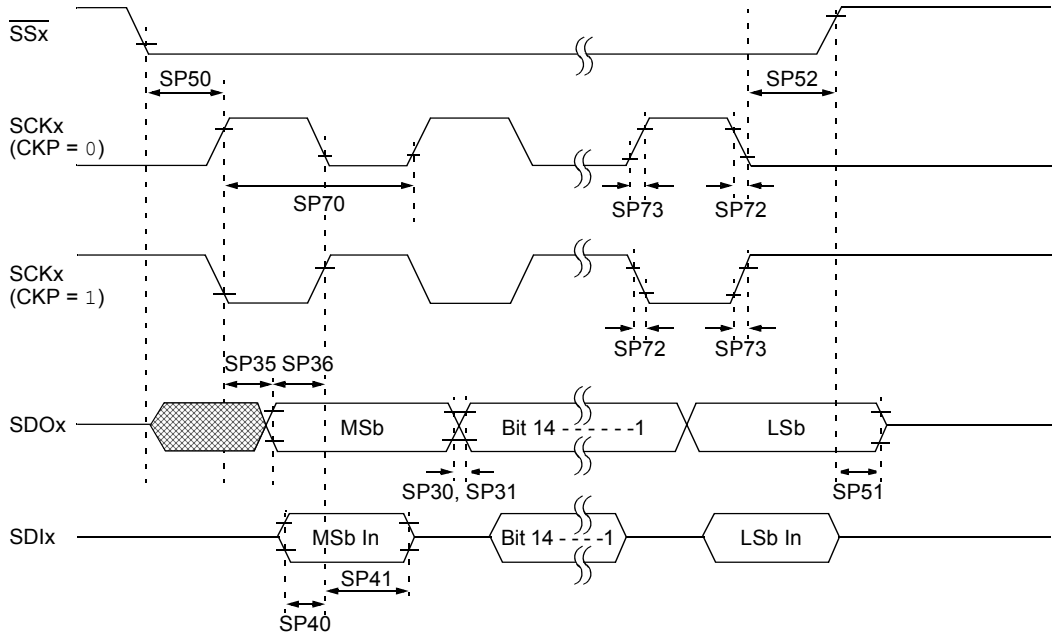

Note: Refer to Figure 26-1 for load conditions.

© 2013-2015 Microchip Technology Inc.

TABLE 26-37: SPIx SLAVE MODE (FULL-DUPLEX, CKE = 0, CKP = 1, SMP = 0) TIMING REQUIREMENTS

AC CHARACTERISTICS			Standard Operating Conditions: 3.0V to 3.6V (unless otherwise stated) Operating temperature -40°C ≤ TA ≤ +85°C for Industrial -40°C ≤ TA ≤ +125°C for Extended				
Param No.	**Symbol**	**Characteristic(1)**	**Min.**	**Typ.(2)**	**Max.**	**Units**	**Conditions**
SP70	FscP	Maximum SCKx Input Frequency	—	—	15	MHz	(Note 3)
SP72	TscF	SCKx Input Fall Time	—	—	—	ns	See Parameter DO32 (Note 4)
SP73	TscR	SCKx Input Rise Time	—	—	—	ns	See Parameter DO31 (Note 4)
SP30	TdoF	SDOx Data Output Fall Time	—	—	—	ns	See Parameter DO32 (Note 4)
SP31	TdoR	SDOx Data Output Rise Time	—	—	—	ns	See Parameter DO31 (Note 4)
SP35	TscH2doV, TscL2doV	SDOx Data Output Valid After SCKx Edge	—	6	20	ns	
SP36	TdoV2scH, TdoV2scL	SDOx Data Output Setup to First SCKx Edge	30	—	—	ns	
SP40	TdiV2scH, TdiV2scL	Setup Time of SDIx Data Input to SCKx Edge	30	—	—	ns	
SP41	TscH2diL, TscL2diL	Hold Time of SDIx Data Input to SCKx Edge	30	—	—	ns	
SP50	TssL2scH, TssL2scL	$\overline{SSx}$ ↓ to SCKx ↑ or SCKx ↓ Input	120	—	—	ns	
SP51	TssH2doZ	$\overline{SSx}$ ↑ to SDOx Output High-Impedance	10	—	50	ns	(Note 4)
SP52	TscH2ssH, TscL2ssH	$\overline{SSx}$ ↑ After SCKx Edge	1.5 TCY + 40	—	—	ns	(Note 4)

Note 1: These parameters are characterized but not tested in manufacturing.

2: Data in “Typ.” column is at 3.3V, +25°C unless otherwise stated.

3: The minimum clock period for SCKx is 66.7 ns. Therefore, the SCKx clock generated by the master must not violate this specification.

4: Assumes 50 pF load on all SPIx pins.

FIGURE 26-18: SPIx SLAVE MODE (FULL-DUPLEX, CKE = 0, CKP = 0, SMP = 0) TIMING CHARACTERISTICS

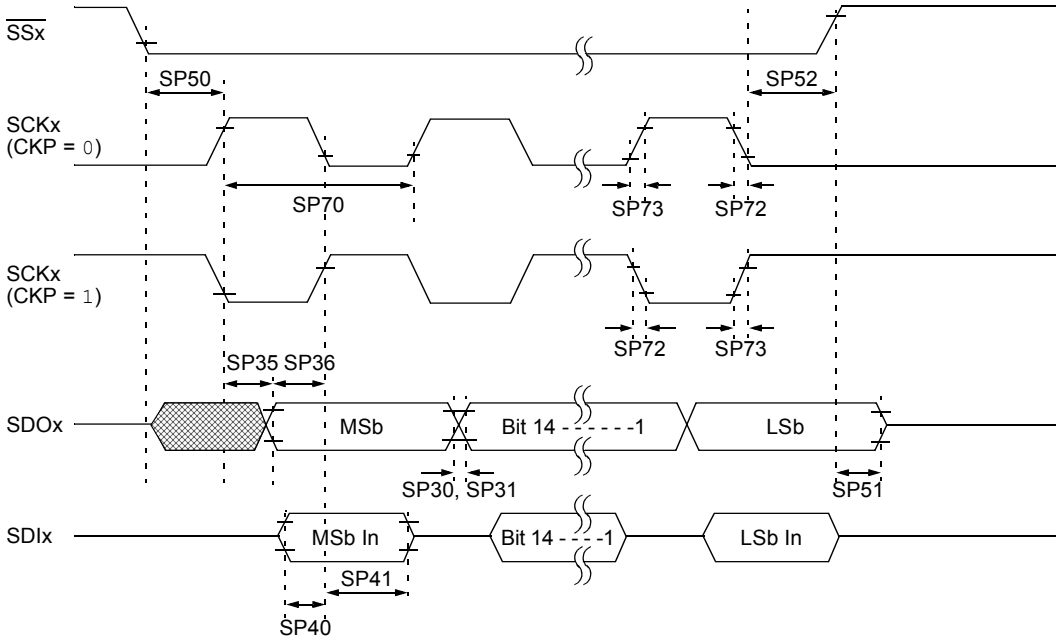

Note: Refer to Figure 26-1 for load conditions.

© 2013-2015 Microchip Technology Inc.

TABLE 26-38: SPIx SLAVE MODE (FULL-DUPLEX, CKE = 0, CKP = 0, SMP = 0) TIMING REQUIREMENTS

AC CHARACTERISTICS			Standard Operating Conditions: 3.0V to 3.6V (unless otherwise stated) Operating temperature -40°C ≤ TA ≤ +85°C for Industrial -40°C ≤ TA ≤ +125°C for Extended				
Param No.	**Symbol**	**Characteristic(1)**	**Min.**	**Typ.(2)**	**Max.**	**Units**	**Conditions**
SP70	FscP	Maximum SCKx Input Frequency	—	—	11	MHz	(Note 3)
SP72	TscF	SCKx Input Fall Time	—	—	—	ns	See Parameter DO32 (Note 4)
SP73	TscR	SCKx Input Rise Time	—	—	—	ns	See Parameter DO31 (Note 4)
SP30	TdoF	SDOx Data Output Fall Time	—	—	—	ns	See Parameter DO32 (Note 4)
SP31	TdoR	SDOx Data Output Rise Time	—	—	—	ns	See Parameter DO31 (Note 4)
SP35	TscH2doV, TscL2doV	SDOx Data Output Valid After SCKx Edge	—	6	20	ns	
SP36	TdoV2scH, TdoV2scL	SDOx Data Output Setup to First SCKx Edge	30	—	—	ns	
SP40	TdiV2scH, TdiV2scL	Setup Time of SDIx Data Input to SCKx Edge	30	—	—	ns	
SP41	TscH2diL, TscL2diL	Hold Time of SDIx Data Input to SCKx Edge	30	—	—	ns	
SP50	TssL2scH, TssL2scL	$\overline{SSx}$ ↓ to SCKx ↑ or SCKx ↓ Input	120	—	—	ns	
SP51	TssH2doZ	$\overline{SSx}$ ↑ to SDOx Output High-Impedance	10	—	50	ns	(Note 4)
SP52	TscH2ssH, TscL2ssH	$\overline{SSx}$ ↑ After SCKx Edge	1.5 TCY + 40	—	—	ns	(Note 4)

Note 1: These parameters are characterized but not tested in manufacturing.

2: Data in "Typ." column is at 3.3V, +25°C unless otherwise stated.

3: The minimum clock period for SCKx is 91 ns. Therefore, the SCKx clock generated by the master must not violate this specification.

4: Assumes 50 pF load on all SPIx pins.

FIGURE 26-19: I2Cx BUS START/STOP BITS TIMING CHARACTERISTICS (MASTER MODE)

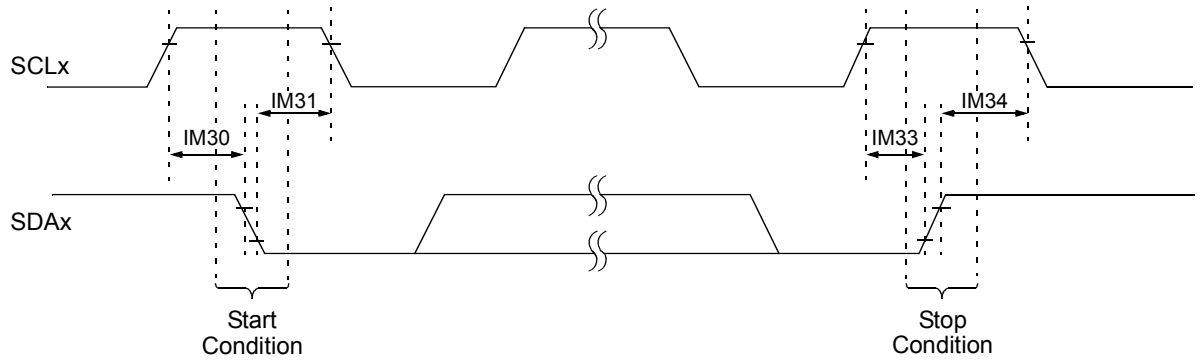

Note: Refer to Figure 26-1 for load conditions.

FIGURE 26-20: I2Cx BUS DATA TIMING CHARACTERISTICS (MASTER MODE)

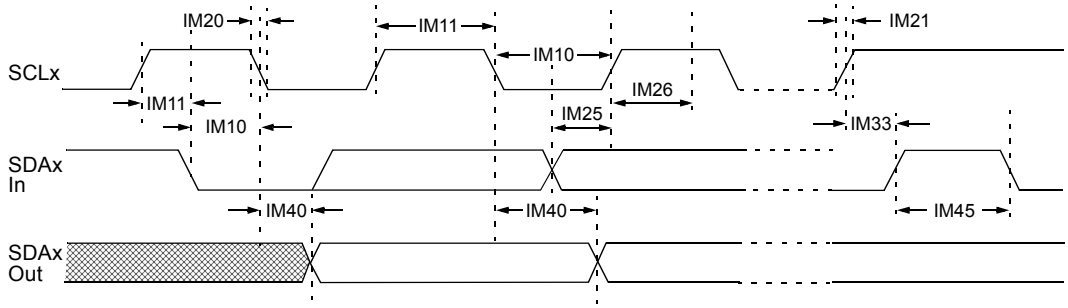

Note: Refer to Figure 26-1 for load conditions.

© 2013-2015 Microchip Technology Inc.

TABLE 26-39: I2Cx BUS DATA TIMING REQUIREMENTS (MASTER MODE)

AC CHARACTERISTICS				Standard Operating Conditions: 3.0V to 3.6V (unless otherwise stated) Operating temperature -40°C ≤ TA ≤ +85°C for Industrial -40°C ≤ TA ≤ +125°C for Extended			
Param No.	**Symbol**	**Characteristic[4]**		**Min.[1]**	**Max.**	**Units**	**Conditions**
IM10	TLO:SCL	Clock Low Time	100 kHz mode	TCY/2 (BRG + 2)	—	μs	
			400 kHz mode	TCY/2 (BRG + 2)	—	μs	
			1 MHz mode[2]	TCY/2 (BRG + 2)	—	μs	
IM11	THI:SCL	Clock High Time	100 kHz mode	TCY/2 (BRG + 2)	—	μs	
			400 kHz mode	TCY/2 (BRG + 2)	—	μs	
			1 MHz mode[2]	TCY/2 (BRG + 2)	—	μs	
IM20	TF:SCL	SDAx and SCLx Fall Time	100 kHz mode	—	300	ns	CB is specified to be from 10 to 400 pF
			400 kHz mode	20 + 0.1 CB	300	ns	
			1 MHz mode[2]	—	100	ns	
IM21	TR:SCL	SDAx and SCLx Rise Time	100 kHz mode	—	1000	ns	CB is specified to be from 10 to 400 pF
			400 kHz mode	20 + 0.1 CB	300	ns	
			1 MHz mode[2]	—	300	ns	
IM25	TSU:DAT	Data Input Setup Time	100 kHz mode	250	—	ns	
			400 kHz mode	100	—	ns	
			1 MHz mode[2]	40	—	ns	
IM26	THD:DAT	Data Input Hold Time	100 kHz mode	0	—	μs	
			400 kHz mode	0	0.9	μs	
			1 MHz mode[2]	0.2	—	μs	
IM30	TSU:STA	Start Condition Setup Time	100 kHz mode	TCY/2 (BRG + 2)	—	μs	Only relevant for Repeated Start condition
			400 kHz mode	TCY/2 (BRG + 2)	—	μs	
			1 MHz mode[2]	TCY/2 (BRG + 2)	—	μs	
IM31	THD:STA	Start Condition Hold Time	100 kHz mode	TCY/2 (BRG + 2)	—	μs	After this period, the first clock pulse is generated
			400 kHz mode	TCY/2 (BRG +2)	—	μs	
			1 MHz mode[2]	TCY/2 (BRG + 2)	—	μs	
IM33	TSU:STO	Stop Condition Setup Time	100 kHz mode	TCY/2 (BRG + 2)	—	μs	
			400 kHz mode	TCY/2 (BRG + 2)	—	μs	
			1 MHz mode[2]	TCY/2 (BRG + 2)	—	μs	
IM34	THD:STO	Stop Condition Hold Time	100 kHz mode	TCY/2 (BRG + 2)	—	μs	
			400 kHz mode	TCY/2 (BRG + 2)	—	μs	
			1 MHz mode[2]	TCY/2 (BRG + 2)	—	μs	
IM40	TAA:SCL	Output Valid from Clock	100 kHz mode	—	3500	ns	
			400 kHz mode	—	1000	ns	
			1 MHz mode[2]	—	400	ns	
IM45	TBF:SDA	Bus Free Time	100 kHz mode	4.7	—	μs	Time the bus must be free before a new transmission can start
			400 kHz mode	1.3	—	μs	
			1 MHz mode[2]	0.5	—	μs	
IM50	CB	Bus Capacitive Loading		—	400	pF	
IM51	TPGD	Pulse Gobbler Delay		65	390	ns	(Note 3)

Note 1: BRG is the value of the I^{2}C™ Baud Rate Generator.

2: Maximum Pin Capacitance = 10 pF for all I2Cx pins (for 1 MHz mode only).

3: Typical value for this parameter is 130 ns.

4: These parameters are characterized but not tested in manufacturing.

FIGURE 26-21: I2Cx BUS START/STOP BITS TIMING CHARACTERISTICS (SLAVE MODE)

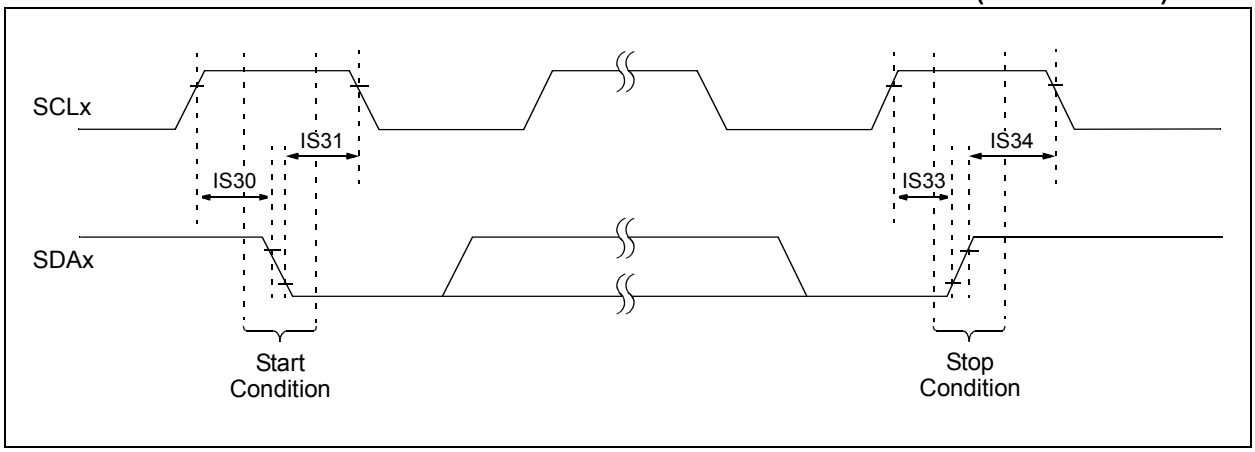

FIGURE 26-22: I2Cx BUS DATA TIMING CHARACTERISTICS (SLAVE MODE)

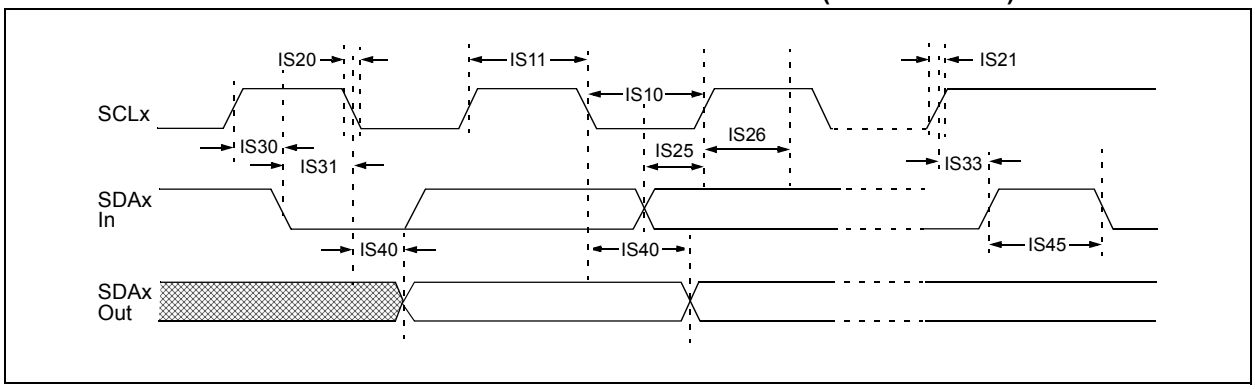

© 2013-2015 Microchip Technology Inc.

TABLE 26-40: I2Cx BUS DATA TIMING REQUIREMENTS (SLAVE MODE)

AC CHARACTERISTICS				Standard Operating Conditions: 3.0V to 3.6V (unless otherwise stated) Operating temperature -40°C ≤ TA ≤ +85°C for Industrial -40°C ≤ TA ≤ +125°C for Extended			
Param No.	**Symbol**	**Characteristic[3]**		**Min.**	**Max.**	**Units**	**Conditions**
IS10	TLO:SCL	Clock Low Time	100 kHz mode	4.7	—	μs	
			400 kHz mode	1.3	—	μs	
			1 MHz mode[1]	0.5	—	μs	
IS11	THI:SCL	Clock High Time	100 kHz mode	4.0	—	μs	Device must operate at a minimum of 1.5 MHz
			400 kHz mode	0.6	—	μs	Device must operate at a minimum of 10 MHz
			1 MHz mode[1]	0.5	—	μs	
IS20	TF:SCL	SDAx and SCLx Fall Time	100 kHz mode	—	300	ns	CB is specified to be from 10 to 400 pF
			400 kHz mode	20 + 0.1 CB	300	ns	
			1 MHz mode[1]	—	100	ns	
IS21	TR:SCL	SDAx and SCLx Rise Time	100 kHz mode	—	1000	ns	CB is specified to be from 10 to 400 pF
			400 kHz mode	20 + 0.1 CB	300	ns	
			1 MHz mode[1]	—	300	ns	
IS25	TSU:DAT	Data Input Setup Time	100 kHz mode	250	—	ns	
			400 kHz mode	100	—	ns	
			1 MHz mode[1]	100	—	ns	
IS26	THD:DAT	Data Input Hold Time	100 kHz mode	0	—	μs	
			400 kHz mode	0	0.9	μs	
			1 MHz mode[1]	0	0.3	μs	
IS30	TSU:STA	Start Condition Setup Time	100 kHz mode	4.7	—	μs	Only relevant for Repeated Start condition
			400 kHz mode	0.6	—	μs	
			1 MHz mode[1]	0.25	—	μs	
IS31	THD:STA	Start Condition Hold Time	100 kHz mode	4.0	—	μs	After this period, the first clock pulse is generated
			400 kHz mode	0.6	—	μs	
			1 MHz mode[1]	0.25	—	μs	
IS33	TSU:STO	Stop Condition Setup Time	100 kHz mode	4.7	—	μs	
			400 kHz mode	0.6	—	μs	
			1 MHz mode[1]	0.6	—	μs	
IS34	THD:STO	Stop Condition Hold Time	100 kHz mode	4	—	μs	
			400 kHz mode	0.6	—	μs	
			1 MHz mode[1]	0.25		μs	
IS40	TAA:SCL	Output Valid from Clock	100 kHz mode	0	3500	ns	
			400 kHz mode	0	1000	ns	
			1 MHz mode[1]	0	350	ns	
IS45	TBF:SDA	Bus Free Time	100 kHz mode	4.7	—	μs	Time the bus must be free before a new transmission can start
			400 kHz mode	1.3	—	μs	
			1 MHz mode[1]	0.5	—	μs	
IS50	CB	Bus Capacitive Loading		—	400	pF	
IS51	TPGD	Pulse Gobbler Delay		65	390	ns	(Note 2)

Note 1: Maximum Pin Capacitance = 10 pF for all I2Cx pins (for 1 MHz mode only).

2: Typical value for this parameter is 130 ns.

3: These parameters are characterized but not tested in manufacturing.

FIGURE 26-23: UARTx MODULE I/O TIMING CHARACTERISTICS

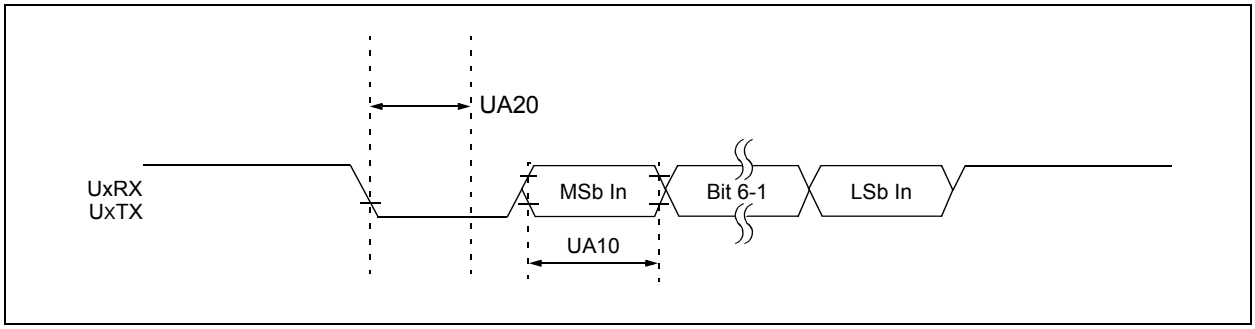

TABLE 26-41: UARTx MODULE I/O TIMING REQUIREMENTS

AC CHARACTERISTICS			Standard Operating Conditions: 3.0V to 3.6V (unless otherwise stated) Operating temperature -40°C ≤ TA ≤ +125°C				
Param No.	**Symbol**	**Characteristic(1)**	**Min.**	**Typ.(2)**	**Max.**	**Units**	**Conditions**
UA10	TUABAUD	UARTx Baud Time	66.67	—	—	ns	
UA11	FBAUD	UARTx Baud Frequency	—	—	15	Mbps	
UA20	TCWF	Start Bit Pulse Width to Trigger UARTx Wake-up	500	—	—	ns	

Note 1: These parameters are characterized but not tested in manufacturing.

2: Data in “Typ.” column is at 3.3V, +25°C unless otherwise stated. Parameters are for design guidance only and are not tested.

© 2013-2015 Microchip Technology Inc.

TABLE 26-42: ADC MODULE SPECIFICATIONS

AC CHARACTERISTICS			Standard Operating Conditions: 3.0V to 3.6V (unless otherwise stated)[5] Operating temperature -40°C ≤ TA ≤ +85°C for Industrial -40°C ≤ TA ≤ +125°C for Extended				
Param No.	**Symbol**	**Characteristics**	**Min.**	**Typical**	**Max.**	**Units**	**Conditions**
Device Supply							
AD01	AVDD	Module VDD Supply	Greater of: VDD – 0.3 or 3.0	—	Lesser of: VDD + 0.3 or 3.6	V	
AD02	AVSS	Module VSS Supply	VSS	—	VSS + 0.3	V	
Reference Inputs							
AD06	VREFL	Reference Voltage Low	—	AVSS	—	V	(**Note 1**)
AD07	VREF	Absolute Reference Voltage (VREFH – VREFL)	2.7	—	AVDD	V	(**Note 3**)
AD08	IREF	Reference Input Current	—	5	10	μA	ADC operating or in standby
Analog Input							
AD12	VINH-VINL	Full-Scale Input Span	AVSS	—	AVDD	V	
AD14	VIN	Absolute Input Voltage	AVSS – 0.3	—	AVDD + 0.3	V	
AD17	RIN	Recommended Impedance of Analog Voltage Source	—	100	—	Ω	For minimum sampling time (**Note 1**)
AD66	VBG	Internal Voltage Reference Source	—	1.2	—	V	
ADC Accuracy: Differential Input							
AD20a	Nr	Resolution	12			bits	
AD21a	INL	Integral Nonlinearity	> -3	—	< 3	LSb	AVSS = 0V, AVDD = 3.3V
AD22a	DNL	Differential Nonlinearity	> -1	—	< 1	LSb	AVSS = 0V, AVDD = 3.3V (**Note 2**)
AD23a	GERR	Gain Error (Dedicated Core)	> 5	13	< 20	LSb	AVSS = 0V, AVDD = 3.3V
		Gain Error (Shared Core)	> -1	5	< 10	LSb	
AD24a	EOFF	Offset Error (Dedicated Core)	> 2	7	< 12	LSb	AVSS = 0V, AVDD = 3.3V
		Offset Error (Shared Core)	> -2	3	< 8	LSb	
AD25a	—	Monotonicity	—	—	—	—	Guaranteed

Note 1: These parameters are not characterized or tested in manufacturing.

2: With no missing codes.

3: These parameters are characterized but not tested in manufacturing.

4: Characterized with a 1 kHz sine wave.

5: The ADC module is functional at VBORMIN < VDD < VDDMIN, but with degraded performance. Unless otherwise stated, module functionality is ensured, but not characterized.

TABLE 26-42: ADC MODULE SPECIFICATIONS (CONTINUED)

AC CHARACTERISTICS			Standard Operating Conditions: 3.0V to 3.6V (unless otherwise stated)[5] Operating temperature -40°C ≤ TA ≤ +85°C for Industrial -40°C ≤ TA ≤ +125°C for Extended				
Param No.	**Symbol**	**Characteristics**	**Min.**	**Typical**	**Max.**	**Units**	**Conditions**
ADC Accuracy: Single-Ended Input							
AD20b	Nr	Resolution	12			bits	
AD21b	INL	Integral Nonlinearity	> -3	—	< 3	LSb	AVSS = 0V, AVDD = 3.3V
AD22b	DNL	Differential Nonlinearity	> -1	—	< 1.5	LSb	AVSS = 0V, AVDD = 3.3V (Note 2)
AD23b	GERR	Gain Error (Dedicated Core)	> 5	13	< 20	LSb	AVSS = 0V, AVDD = 3.3V
		Gain Error (Shared Core)	> -1	5	< 10	LSb	
AD24b	EOFF	Offset Error (Dedicated Core)	> 18	39	< 58	LSb	AVSS = 0V, AVDD = 3.3V
		Offset Error (Shared Core)	> 8	25	< 38	LSb	
AD25b	—	Monotonicity	—	—	—	—	Guaranteed
Dynamic Performance							
AD31b	SINAD	Signal-to-Noise and Distortion	63	—	> 65	dB	(Notes 3, 4)
AD34b	ENOB	Effective Number of Bits	10.3	—	—	bits	(Notes 3, 4)

Note 1: These parameters are not characterized or tested in manufacturing.

2: With no missing codes.

3: These parameters are characterized but not tested in manufacturing.

4: Characterized with a 1 kHz sine wave.

5: The ADC module is functional at VBORMIN < VDD < VDDMIN, but with degraded performance. Unless otherwise stated, module functionality is ensured, but not characterized.

© 2013-2015 Microchip Technology Inc.

TABLE 26-43: ANALOG-TO-DIGITAL CONVERSION TIMING REQUIREMENTS

AC CHARACTERISTICS[2]			Standard Operating Conditions: 3.0V to 3.6V (unless otherwise stated)[2] Operating temperature -40°C ≤ TA ≤ +85°C for Industrial -40°C ≤ TA ≤ +125°C for Extended				
Param No.	**Symbol**	**Characteristics**	**Min.**	**Typ.[1]**	**Max.**	**Units**	**Conditions**
Clock Parameters							
AD50	TAD	ADC Clock Period	14.28	—	—	ns	
Throughput Rate							
AD51	FTP	SH0-SH3	—	—	3.25	Msps	70 MHz ADC clock, 12 bits, no pending conversion at time of trigger
		SH4	—	—	3.25	Msps	

Note 1: These parameters are characterized but not tested in manufacturing.

2: The ADC module is functional at VBORMIN < VDD < VDDMIN, but with degraded performance. Unless otherwise stated, module functionality is ensured, but not characterized.

TABLE 26-44: HIGH-SPEED ANALOG COMPARATOR MODULE SPECIFICATIONS

AC/DC CHARACTERISTICS[2]			Standard Operating Conditions: 3.0V to 3.6V (unless otherwise stated) Operating temperature -40°C ≤ TA ≤ +85°C for Industrial -40°C ≤ TA ≤ +125°C for Extended				
Param No.	**Symbol**	**Characteristic**	**Min.**	**Typ.**	**Max.**	**Units**	**Comments**
CM10	VIOFF	Input Offset Voltage	—	±5	—	mV	
CM11	VICM	Input Common-Mode Voltage Range[1]	0	—	AVDD	V	
CM13	CMRR	Common-Mode Rejection Ratio	60	—	—	dB	
CM14	TRESP	Large Signal Response	—	15	—	ns	V+ input step of 100 mV while V- input is held at AVDD/2. Delay measured from analog input pin to PWMx output pin.
CM15	VHYST	Input Hysteresis	5	10	20	mV	Depends on HYSSEL<1:0>
CM16	TON	Comparator Enabled to Valid Output	—	—	1	µs	

Note 1: These parameters are for design guidance only and are not tested in manufacturing.

2: The comparator module is functional at VBORMIN < VDD < VDDMIN, but with degraded performance. Unless otherwise stated, module functionality is tested, but not characterized.

TABLE 26-45: DACx MODULE SPECIFICATIONS

AC/DC CHARACTERISTICS[2]			Standard Operating Conditions: 3.0V to 3.6V (unless otherwise stated) Operating temperature -40°C ≤ TA ≤ +85°C for Industrial -40°C ≤ TA ≤ +125°C for Extended				
Param No.	**Symbol**	**Characteristic**	**Min.**	**Typ.**	**Max.**	**Units**	**Comments**
DA01	EXTREF	External Voltage Reference[1]	0	—	AVDD	V	
DA02	CVRES	Resolution	12			bits	
DA03	INL	Integral Nonlinearity Error	-16	-12	0	LSB	
DA04	DNL	Differential Nonlinearity Error	-1.8	±1	1.8	LSB	
DA05	EOFF	Offset Error	-25	3	25	LSB	
DA06	EG	Gain Error	-1.2	-0.5	0	%	
DA07	TSET	Settling Time[1]	—	700	—	ns	Output with 2% of desired output voltage with a 10-90% or 90-10% step

Note 1: Parameters are for design guidance only and are not tested in manufacturing.

2: The DACx module is functional at VBORMIN < VDD < VDDMIN, but with degraded performance. Unless otherwise stated, module functionality is tested, but not characterized.

TABLE 26-46: DACx OUTPUT (DACOUTx PIN) SPECIFICATIONS

DC CHARACTERISTICS[1]			Standard Operating Conditions: 3.0V to 3.6V (unless otherwise stated) Operating temperature -40°C ≤ TA ≤ +85°C for Industrial -40°C ≤ TA ≤ +125°C for Extended				
Param No.	**Symbol**	**Characteristic**	**Min.**	**Typ.**	**Max.**	**Units**	**Comments**
DA11	RLOAD	Resistive Output Load Impedance	10K	—	—	Ohm	
DA11a	CLOAD	Output Load Capacitance	—	—	35	pF	Including output pin capacitance
DA12	IOUT	Output Current Drive Strength	—	300	—	µA	Sink and source
DA13	VRANGE	Output Drive Voltage Range at Current Drive of 300 µA	AVSS + 250 mV	—	AVDD – 900 mV	V	
DA14	VLRANGE	Output Drive Voltage Range at Reduced Current Drive of 50 µA	AVSS + 50 mV	—	AVDD – 500 mV	V	
DA15	IDD	Current Consumed when Module is Enabled	—	—	1.3 x IOUT	µA	Module will always consume this current, even if no load is connected to the output
DA30	VOFFSET	Input Offset Voltage	—	±5	—	mV	

Note 1: The DACx module is functional at VBORMIN < VDD < VDDMIN, but with degraded performance. Unless otherwise stated, module functionality is tested, but not characterized.

© 2013-2015 Microchip Technology Inc.

TABLE 26-47: PGAx MODULE SPECIFICATIONS

AC/DC CHARACTERISTICS[1]				Standard Operating Conditions: 3.0V to 3.6V (unless otherwise stated) Operating temperature -40°C ≤ TA ≤ +85°C for Industrial -40°C ≤ TA ≤ +125°C for Extended				
Param No.	**Symbol**	**Characteristic**		**Min.**	**Typ.**	**Max.**	**Units**	**Comments**
PA01	VIN	Input Voltage Range		AVSS – 0.3	—	AVDD + 0.3	V	
PA02	VCM	Common-Mode Input Voltage Range		AVSS	—	AVDD – 1.6	V	
PA03	VOS	Input Offset Voltage		-20	—	+20	mV	
PA04	VOS	Input Offset Voltage Drift with Temperature		—	±15	—	μV/°C	
PA05	RIN+	Input Impedance of Positive Input		—	>1M || 7 pF	—	Ω|| pF	
PA06	RIN-	Input Impedance of Negative Input		—	10K || 7 pF	—	Ω|| pF	
PA07	GERR	Gain Error		-2	—	+2	%	Gain = 4x, 8x
				-3	—	+3	%	Gain = 16x
				-4	—	+4	%	Gain = 32x, 64x
PA08	LERR	Gain Nonlinearity Error		—	—	0.5	%	% of full scale, Gain = 16x
PA09	IDD	Current Consumption		—	2.0	—	mA	Module is enabled with a 2-volt P-P output voltage swing
PA10a	BW	Small Signal Bandwidth (-3 dB)	G = 4x	—	10	—	MHz	
PA10b			G = 8x	—	5	—	MHz	
PA10c			G = 16x	—	2.5	—	MHz	
PA10d			G = 32x	—	1.25	—	MHz	
PA10e			G = 64x	—	0.625	—	MHz	
PA11	OST	Output Settling Time to 1% of Final Value		—	0.4	—	μs	Gain = 16x, 100 mV input step change
PA12	SR	Output Slew Rate		—	40	—	V/μs	Gain = 16x
PA13	TGSEL	Gain Selection Time		—	1	—	μs	
PA14	TON	Module Turn On/Setting Time		—	—	10	μs	

Note 1: The PGAx module is functional at VBORMIN < VDD < VDDMIN, but with degraded performance. Unless otherwise stated, module functionality is tested, but not characterized.

TABLE 26-48: CONSTANT-CURRENT SOURCE SPECIFICATIONS

DC CHARACTERISTICS[1]			Standard Operating Conditions: 3.0V to 3.6V (unless otherwise stated) Operating temperature -40°C ≤ TA ≤ +85°C for Industrial -40°C ≤ TA ≤ +125°C for Extended				
Param No.	**Symbol**	**Characteristic**	**Min.**	**Typ.**	**Max.**	**Units**	**Conditions**
CC01	IDD	Current Consumption	—	30	—	μA	
CC02	IREG	Regulation of Current with Voltage On	—	±3	—	%	
CC03	IOUT	Current Output at Terminal	—	10	—	μA	

Note 1: The constant-current source module is functional at VBORMIN < VDD < VDDMIN, but with degraded performance. Unless otherwise stated, module functionality is tested, but not characterized.

NOTES:

© 2013-2015 Microchip Technology Inc.

27.0 DC AND AC DEVICE CHARACTERISTICS GRAPHS

Note: The graphs provided following this note are a statistical summary based on a limited number of samples and are provided for design guidance purposes only. The performance characteristics listed herein are not tested or guaranteed. In some graphs, the data presented may be outside the specified operating range (e.g., outside specified power supply range) and therefore, outside the warranted range.

FIGURE 27-1: VOH – 4x DRIVER PINS

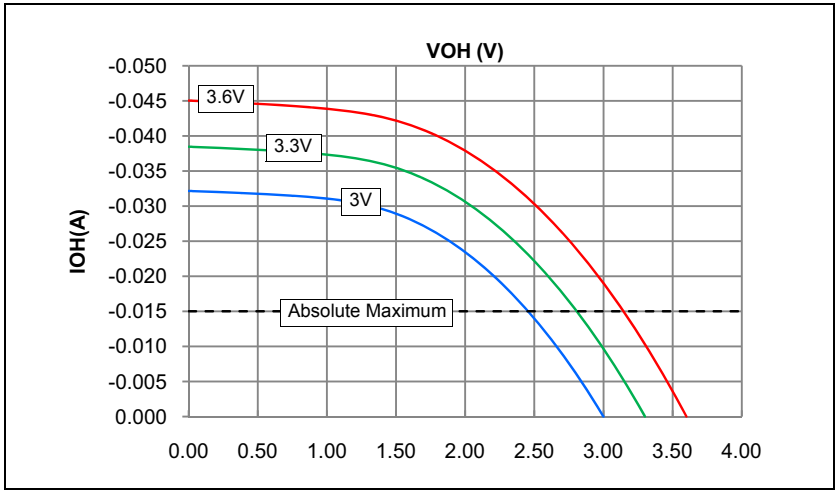

FIGURE 27-2: VOH – 8x DRIVER PINS

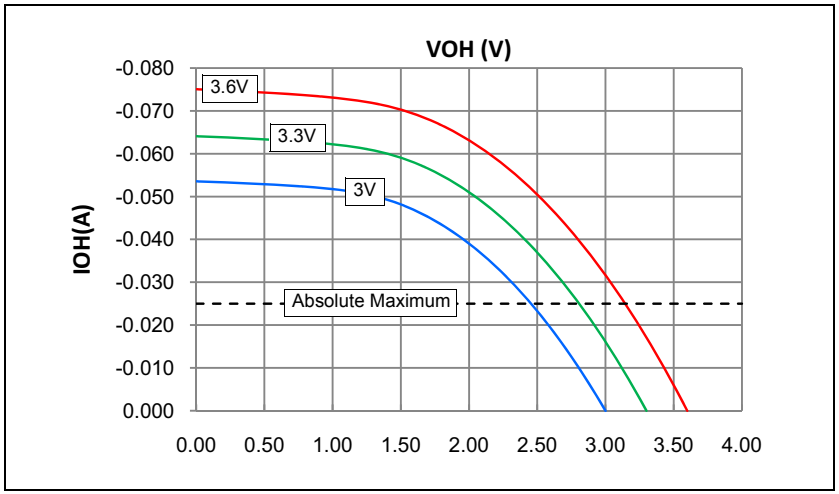

FIGURE 27-3: VOL – 4x DRIVER PINS

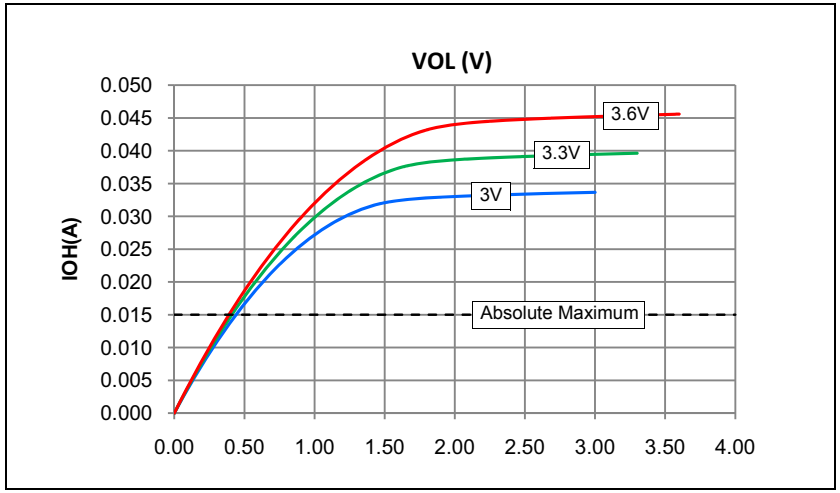

FIGURE 27-4: VOL – 8x DRIVER PINS

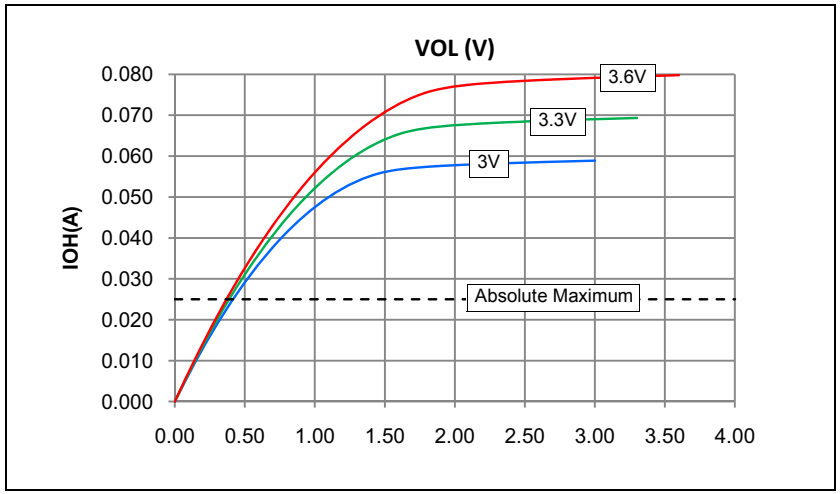

© 2013-2015 Microchip Technology Inc.

FIGURE 27-5: TYPICAL IPD CURRENT @ VDD = 3.3V

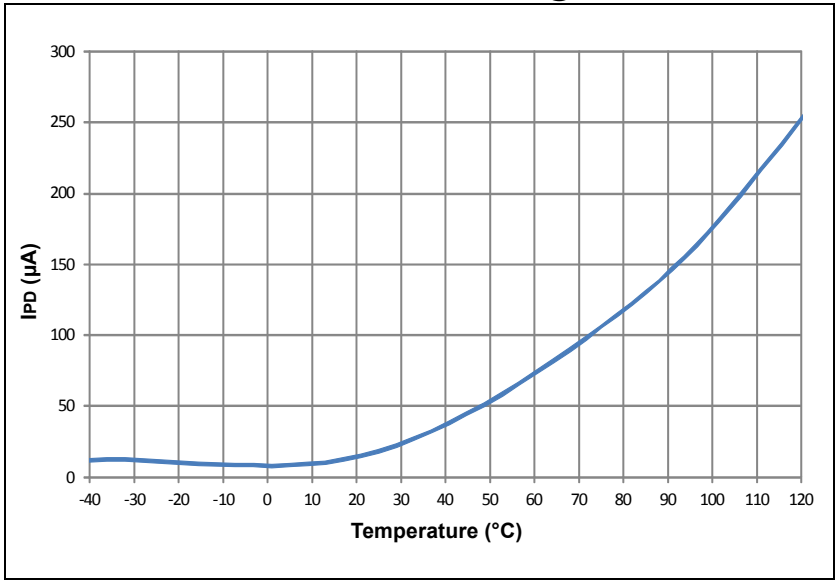

FIGURE 27-6: TYPICAL IDD CURRENT @ VDD = 3.3V, +25°C

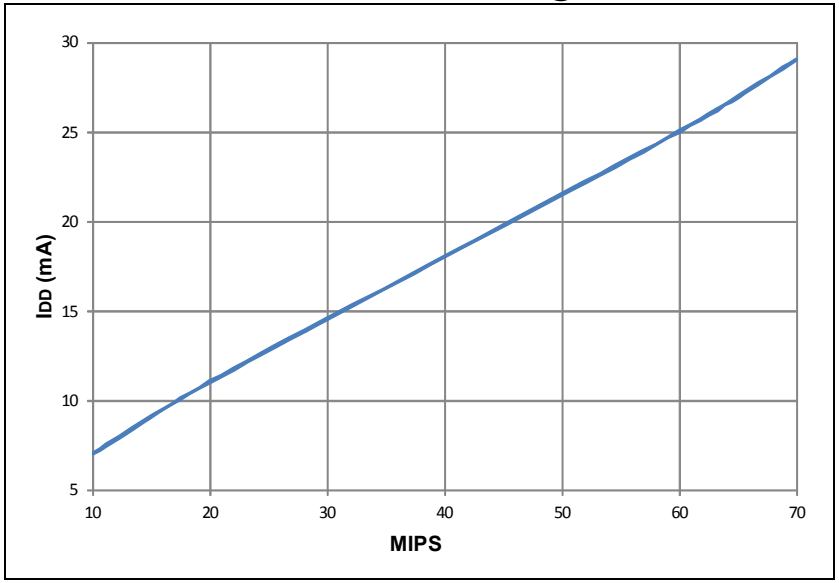

FIGURE 27-7: TYPICAL IDOZE CURRENT @ VDD = 3.3V, +25°C

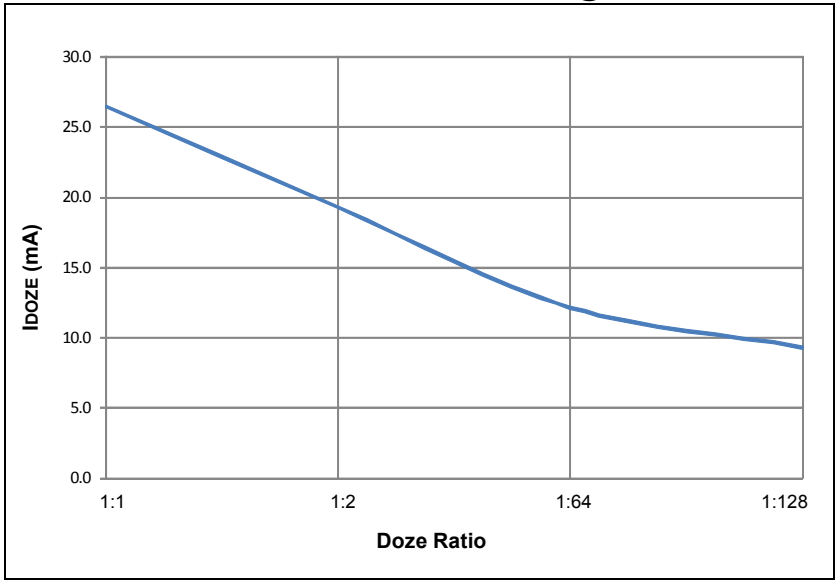

FIGURE 27-8: TYPICAL IIDLE CURRENT @ VDD = 3.3V, +25°C

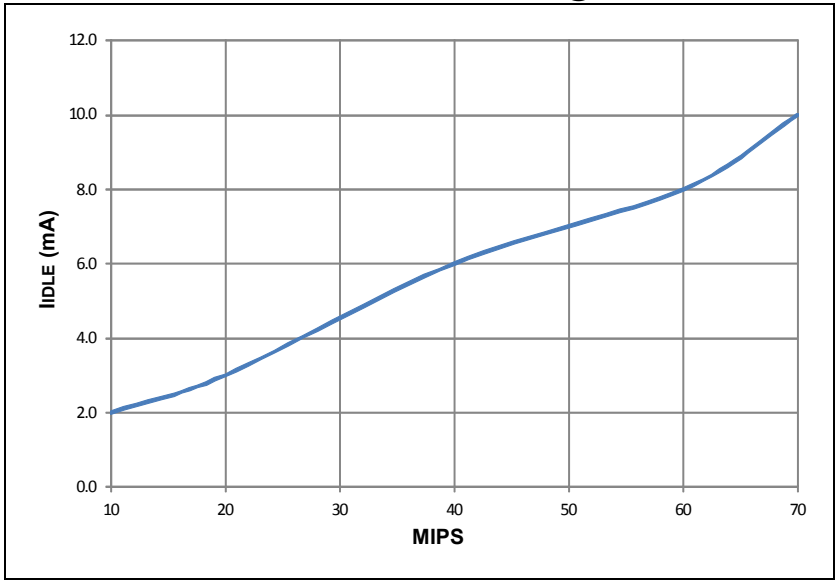

© 2013-2015 Microchip Technology Inc.

FIGURE 27-9: TYPICAL FRC FREQUENCY @ VDD = 3.3V

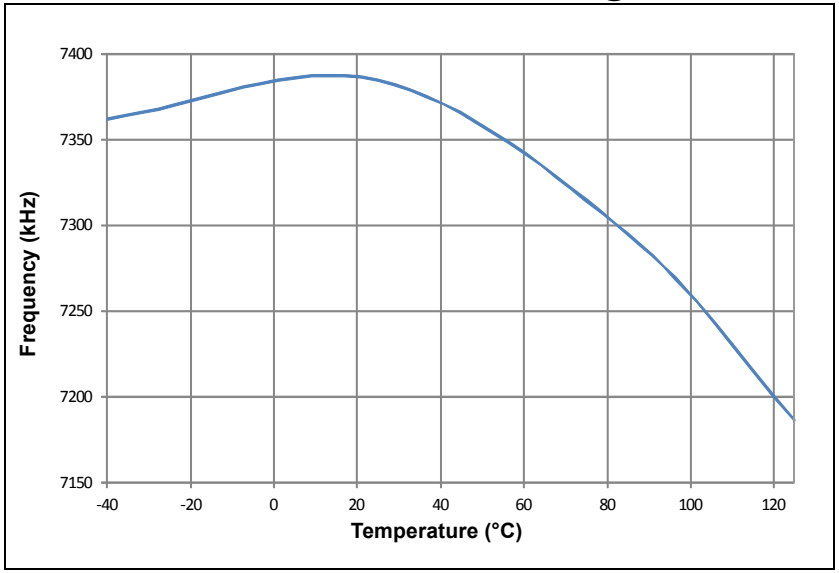

FIGURE 27-10: TYPICAL LPRC FREQUENCY @ VDD = 3.3V

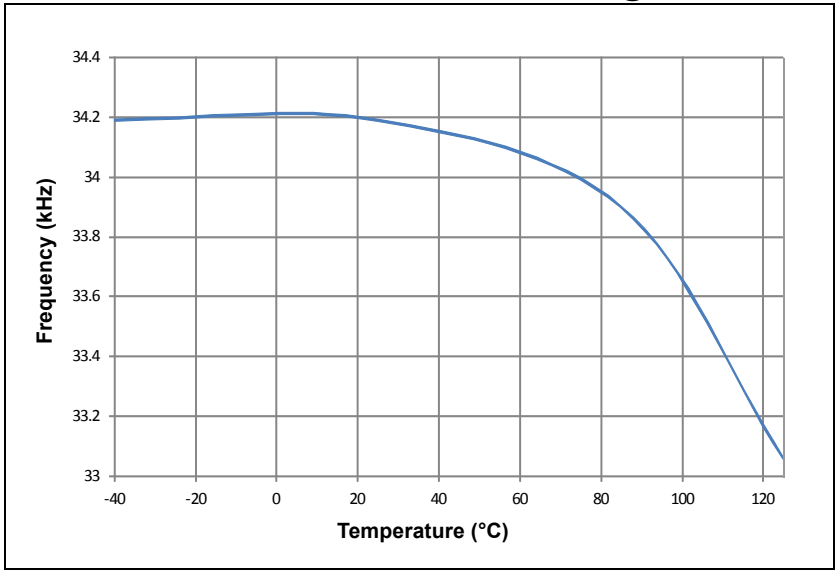

© 2013-2015 Microchip Technology Inc.

NOTES:

© 2013-2015 Microchip Technology Inc.

28.0 PACKAGING INFORMATION

28.1 Package Marking Information

28-Lead SOIC (.300”)

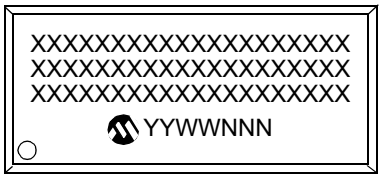

Example

28-Lead UQFN (6x6x0.5 mm)

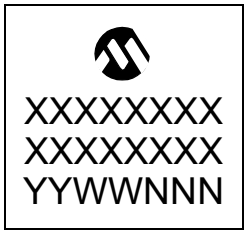

Example

28-Lead QFN-S (6x6x0.9 mm)

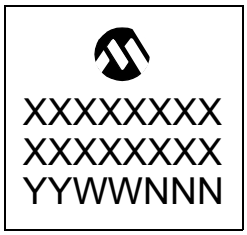

Example

Legend:	XX...X	Customer-specific information
	Y	Year code (last digit of calendar year)
	YY	Year code (last 2 digits of calendar year)
	WW	Week code (week of January 1 is week ‘01’)
	NNN	Alphanumeric traceability code

Note: In the event the full Microchip part number cannot be marked on one line, it will be carried over to the next line, thus limiting the number of available characters for customer-specific information.

28.1 Package Marking Information (Continued)

44-Lead TQFP (10x10x1 mm)

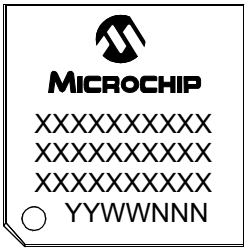

Example

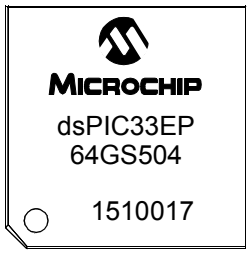

44-Lead QFN (8x8 mm)

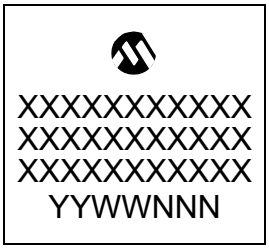

Example

48-Lead TQFP (7x7x1.0 mm)

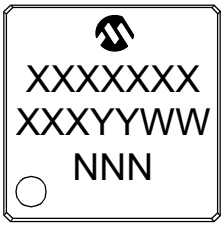

Example

64-Lead TQFP (10x10x1 mm)

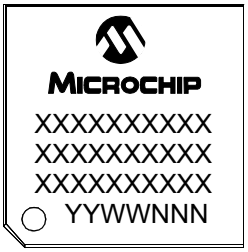

Example

© 2013-2015 Microchip Technology Inc.

28.2 Package Details

28-Lead Plastic Small Outline (SO) - Wide, 7.50 mm Body [SOIC]

Note: For the most current package drawings, please see the Microchip Packaging Specification located at http://www.microchip.com/packaging

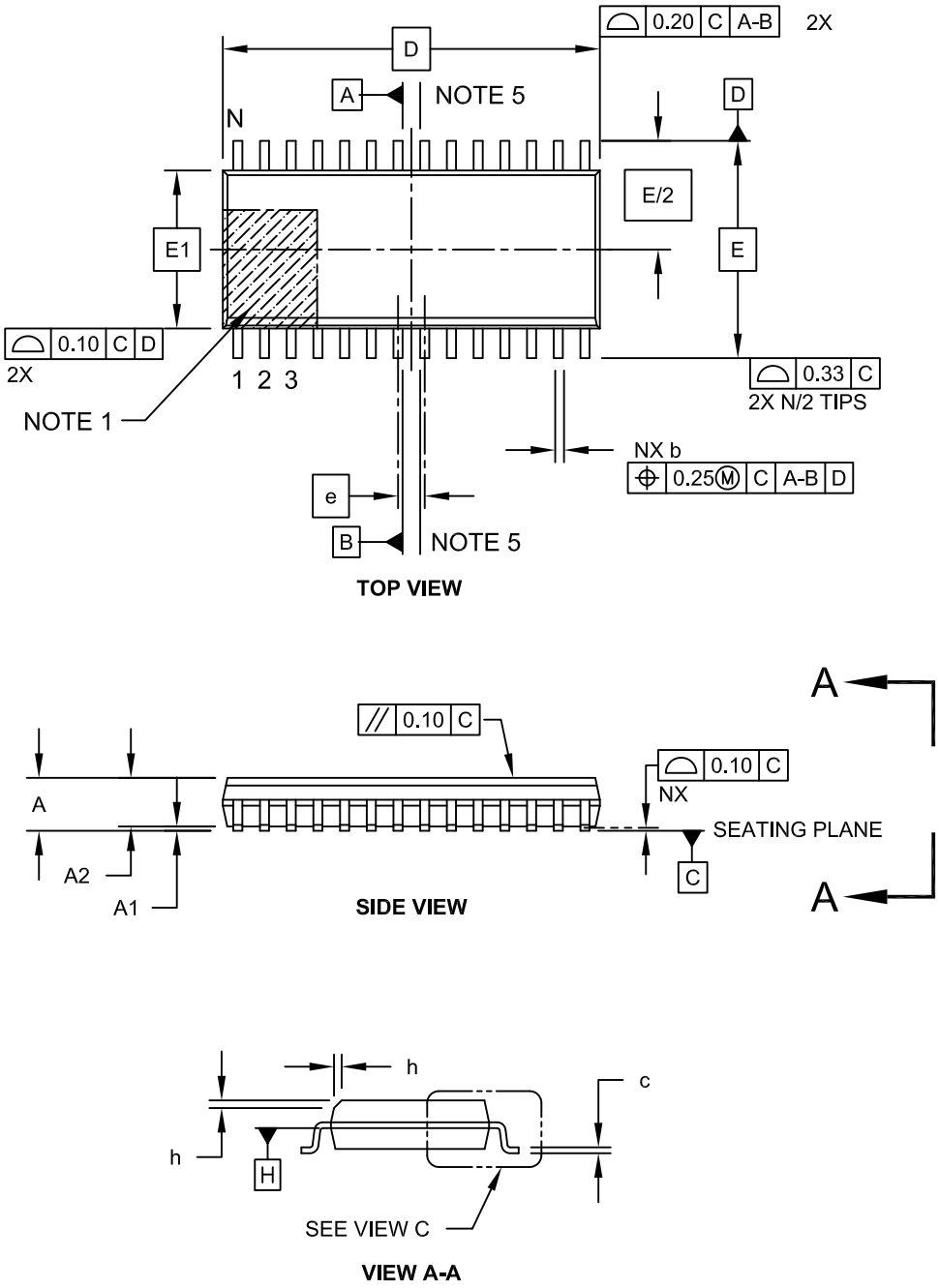

Microchip Technology Drawing C04-052C Sheet 1 of 2

28-Lead Plastic Small Outline (SO) - Wide, 7.50 mm Body [SOIC]

Note: For the most current package drawings, please see the Microchip Packaging Specification located at http://www.microchip.com/packaging

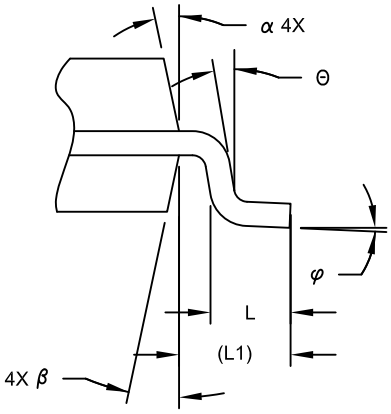

VIEW C

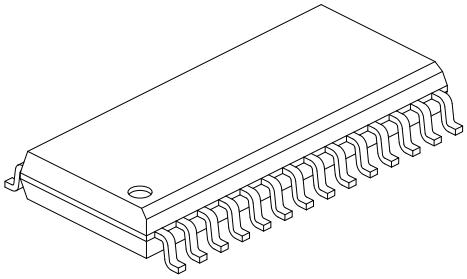

Units		MILLIMETERS		
Dimension Limits		MIN	NOM	MAX
Number of Pins	N	28		
Pitch	e	1.27 BSC		
Overall Height	A	-	-	2.65
Molded Package Thickness	A2	2.05	-	-
Standoff §	A1	0.10	-	0.30
Overall Width	E	10.30 BSC		
Molded Package Width	E1	7.50 BSC		
Overall Length	D	17.90 BSC		
Chamfer (Optional)	h	0.25	-	0.75
Foot Length	L	0.40	-	1.27
Footprint	L1	1.40 REF		
Lead Angle	Θ	0°	-	-
Foot Angle	φ	0°	-	8°
Lead Thickness	c	0.18	-	0.33
Lead Width	b	0.31	-	0.51
Mold Draft Angle Top	α	5°	-	15°
Mold Draft Angle Bottom	β	5°	-	15°

Notes:

1. Pin 1 visual index feature may vary, but must be located within the hatched area.
2. § Significant Characteristic
3. Dimension D does not include mold flash, protrusions or gate burrs, which shall not exceed 0.15 mm per end. Dimension E1 does not include interlead flash or protrusion, which shall not exceed 0.25 mm per side.
4. Dimensioning and tolerancing per ASME Y14.5M
   BSC: Basic Dimension. Theoretically exact value shown without tolerances.
   REF: Reference Dimension, usually without tolerance, for information purposes only.
5. Datums A & B to be determined at Datum H.

Microchip Technology Drawing C04-052C Sheet 2 of 2

© 2013-2015 Microchip Technology Inc.

28-Lead Plastic Small Outline (SO) - Wide, 7.50 mm Body [SOIC]

Note: For the most current package drawings, please see the Microchip Packaging Specification located at http://www.microchip.com/packaging

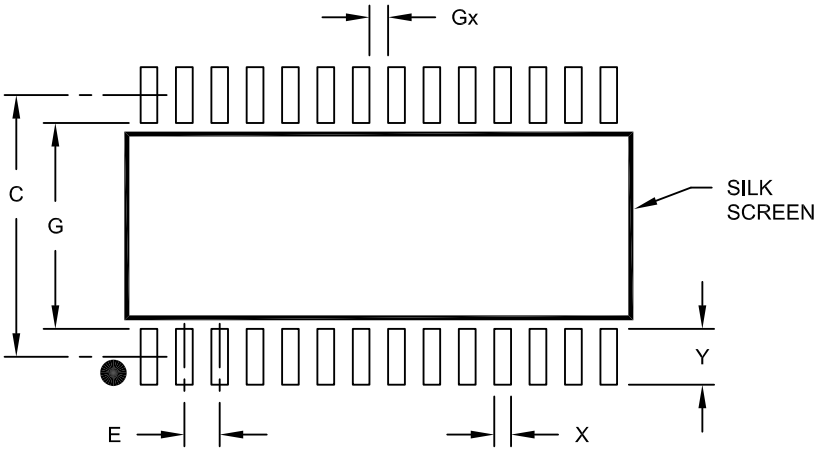

RECOMMENDED LAND PATTERN

Units		MILLIMETERS		
Dimension Limits		MIN	NOM	MAX
Contact Pitch	E	1.27 BSC		
Contact Pad Spacing	C		9.40	
Contact Pad Width (X28)	X			0.60
Contact Pad Length (X28)	Y			2.00
Distance Between Pads	Gx	0.67		
Distance Between Pads	G	7.40		

Notes:

1. Dimensioning and tolerancing per ASME Y14.5M

BSC: Basic Dimension. Theoretically exact value shown without tolerances.

Microchip Technology Drawing No. C04-2052A

28-Lead Plastic Quad Flat, No Lead Package (MX) - 6x6x0.5mm Body [UQFN]
Ultra-Thin with 0.40 x 0.60 mm Terminal Width/Length and Corner Anchors

Note:	For the most current package drawings, please see the Microchip Packaging Specification located at http://www.microchip.com/packaging

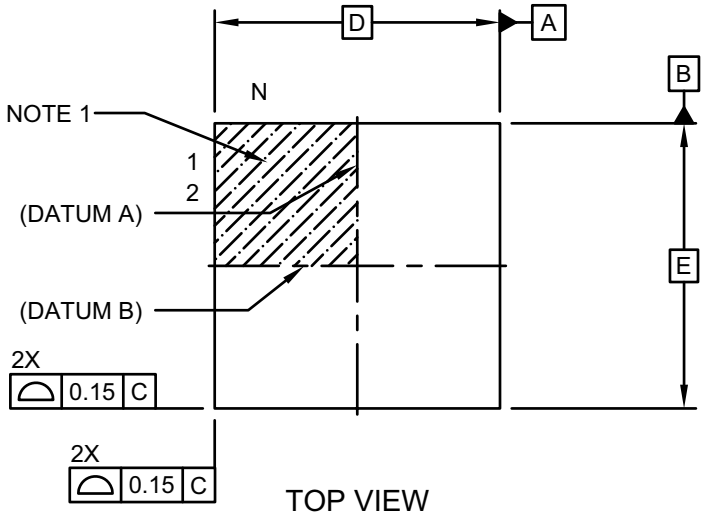

TOP VIEW

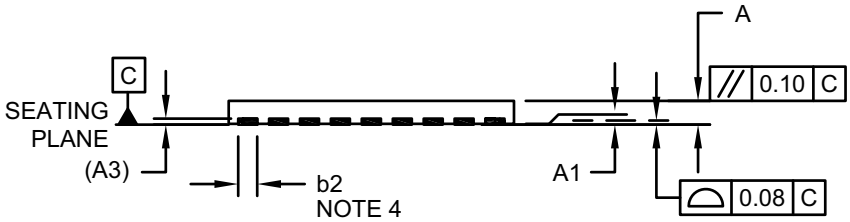

SIDE VIEW

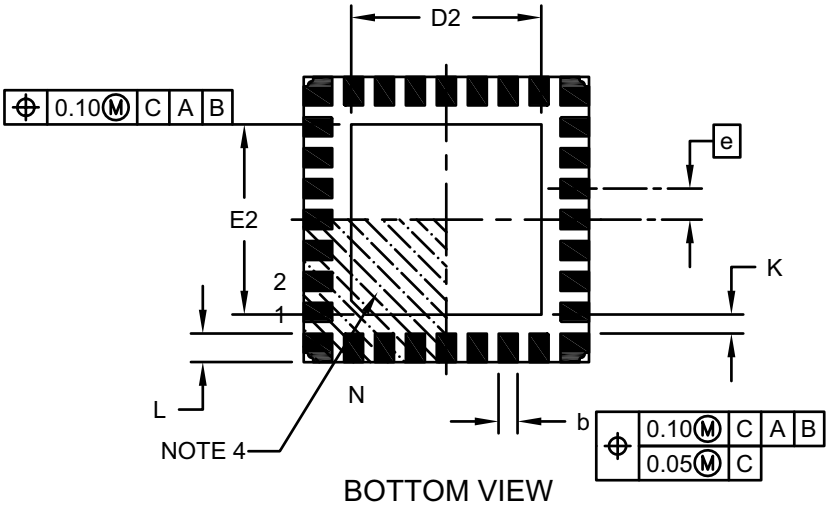

BOTTOM VIEW

Microchip Technology Drawing C04-0209B Sheet 1 of 2

© 2013-2015 Microchip Technology Inc.

28-Lead Plastic Quad Flat, No Lead Package (MX) - 6x6x0.5mm Body [UQFN] Ultra-Thin with 0.40 x 0.60 mm Terminal Width/Length and Corner Anchors

Note: For the most current package drawings, please see the Microchip Packaging Specification located at http://www.microchip.com/packaging

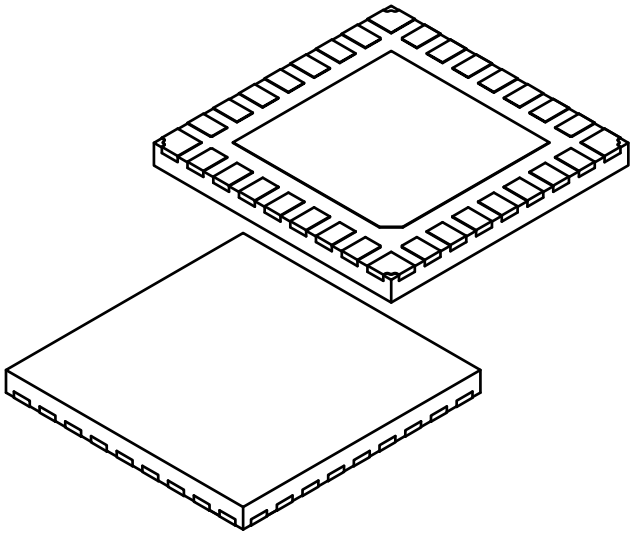

Units		MILLIMETERS		
Dimension Limits		MIN	NOM	MAX
Number of Pins	N	28		
Pitch	e	0.65 BSC		
Overall Height	A	0.40	0.50	0.60
Standoff	A1	0.00	0.02	0.05
Terminal Thickness	(A3)	0.127 REF		
Overall Width	E	6.00 BSC		
Exposed Pad Width	E2		4.00	
Overall Length	D	6.00 BSC		
Exposed Pad Length	D2		4.00	
Terminal Width	b	0.35	0.40	0.45
Corner Pad	b2	0.25	0.40	0.45
Terminal Length	L	0.55	0.60	0.65
Terminal-to-Exposed Pad	K	0.20	-	-

Notes:

1. Pin 1 visual index feature may vary, but must be located within the hatched area.
2. Package is saw singulated
3. Dimensioning and tolerancing per ASME Y14.5M
   BSC: Basic Dimension. Theoretically exact value shown without tolerances.
   REF: Reference Dimension, usually without tolerance, for information purposes only.
4. Outermost portions of corner structures may vary slightly.

Microchip Technology Drawing C04-0209B Sheet 2 of 2

28-Lead Plastic Quad Flat, No Lead Package (MX) - 6x6 mm Body [UQFN] With 0.60mm Contact Length And Corner Anchors

Note: For the most current package drawings, please see the Microchip Packaging Specification located at http://www.microchip.com/packaging

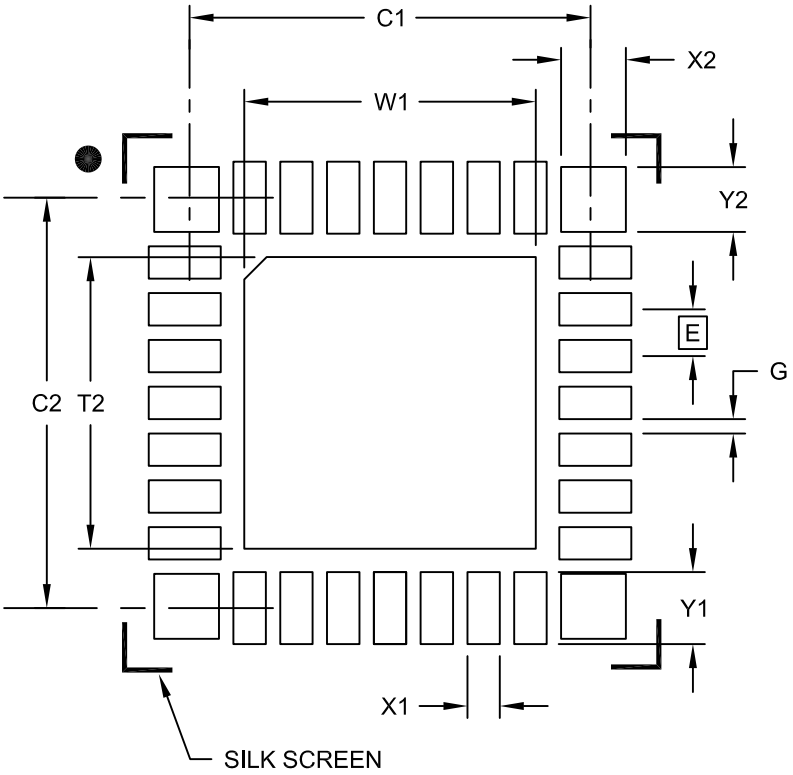

RECOMMENDED LAND PATTERN

Units		MILLIMETERS		
Dimension Limits		MIN	NOM	MAX
Contact Pitch	E		0.65 BSC	
Optional Center Pad Width	W1			4.05
Optional Center Pad Length	T2			4.05
Contact Pad Spacing	C1		5.70	
Contact Pad Spacing	C2		5.70	
Contact Pad Width (X28)	X1			0.45
Contact Pad Length (X28)	Y1			1.00
Corner Pad Width (X4)	X2			0.90
Corner Pad Length (X4)	Y2			0.90
Distance Between Pads	G	0.20		

Notes:

1. Dimensioning and tolerancing per ASME Y14.5M
   BSC: Basic Dimension. Theoretically exact value shown without tolerances.

Microchip Technology Drawing No. C04-2209B

© 2013-2015 Microchip Technology Inc.

28-Lead Plastic Quad Flat, No Lead Package (MM) - 6x6x0.9mm Body [QFN-S]
With 0.40 mm Terminal Length

Note:	For the most current package drawings, please see the Microchip Packaging Specification located at http://www.microchip.com/packaging

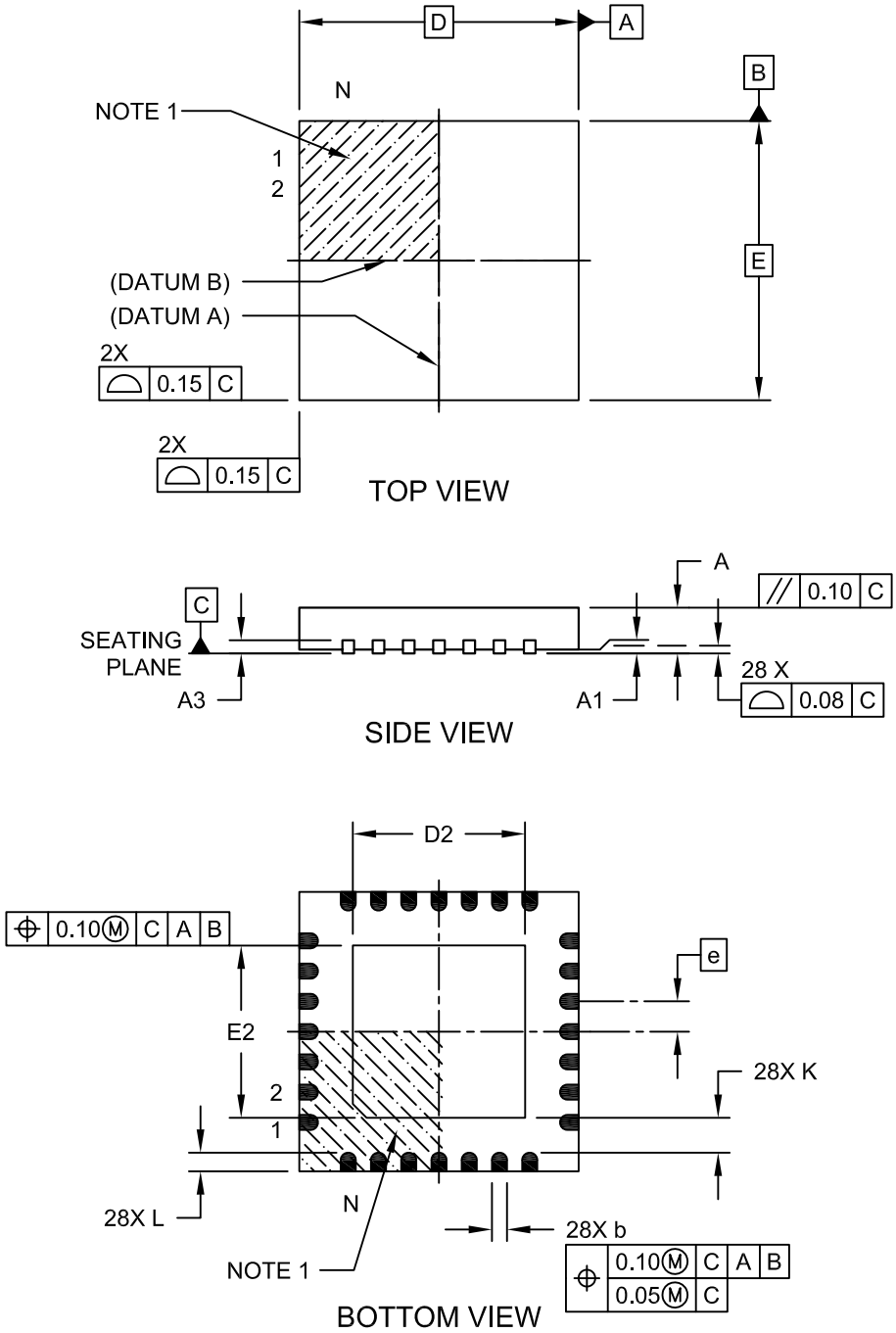

Microchip Technology Drawing C04-124C Sheet 1 of 2

28-Lead Plastic Quad Flat, No Lead Package (MM) - 6x6x0.9mm Body [QFN-S] With 0.40 mm Terminal Length

Note: For the most current package drawings, please see the Microchip Packaging Specification located at http://www.microchip.com/packaging

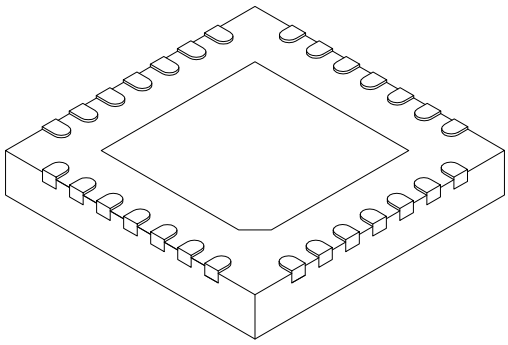

Units		MILLIMETERS		
Dimension Limits		MIN	NOM	MAX
Number of Pins	N	28		
Pitch	e	0.65 BSC		
Overall Height	A	0.80	0.90	1.00
Standoff	A1	0.00	0.02	0.05
Terminal Thickness	A3	0.20 REF		
Overall Width	E	6.00 BSC		
Exposed Pad Width	E2	3.65	3.70	4.70
Overall Length	D	6.00 BSC		
Exposed Pad Length	D2	3.65	3.70	4.70
Terminal Width	b	0.23	0.30	0.35
Terminal Length	L	0.30	0.40	0.50
Terminal-to-Exposed Pad	K	0.20	-	-

Notes:

1. Pin 1 visual index feature may vary, but must be located within the hatched area.
2. Package is saw singulated
3. Dimensioning and tolerancing per ASME Y14.5M

   BSC: Basic Dimension. Theoretically exact value shown without tolerances.

   REF: Reference Dimension, usually without tolerance, for information purposes only.

Microchip Technology Drawing C04-124C Sheet 2 of 2

© 2013-2015 Microchip Technology Inc.

28-Lead Plastic Quad Flat, No Lead Package (MM) – 6x6x0.9 mm Body [QFN-S] with 0.40 mm Contact Length

Note: For the most current package drawings, please see the Microchip Packaging Specification located at http://www.microchip.com/packaging

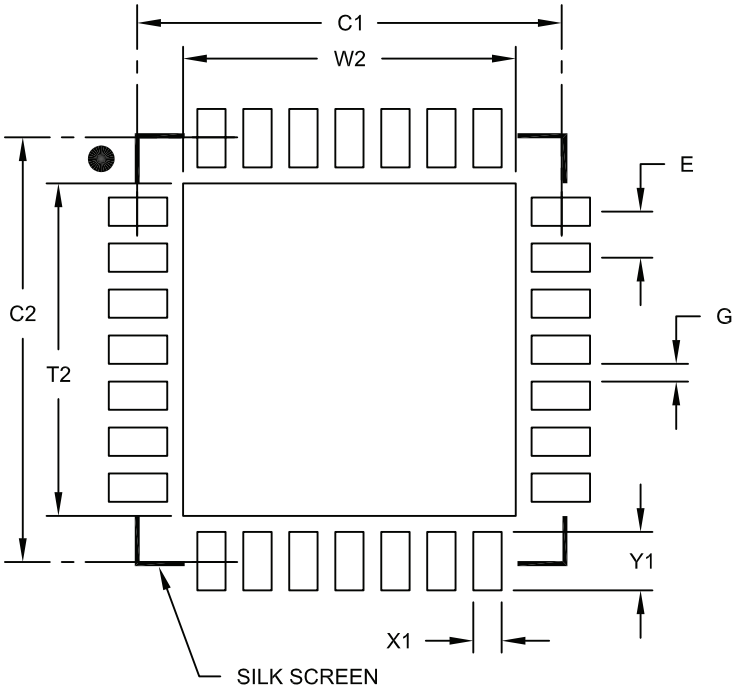

RECOMMENDED LAND PATTERN

Units		MILLIMETERS		
Dimension Limits		MIN	NOM	MAX
Contact Pitch	E		0.65 BSC	
Optional Center Pad Width	W2			4.70
Optional Center Pad Length	T2			4.70
Contact Pad Spacing	C1		6.00	
Contact Pad Spacing	C2		6.00	
Contact Pad Width (X28)	X1			0.40
Contact Pad Length (X28)	Y1			0.85
Distance Between Pads	G	0.25		

Notes:

1. Dimensioning and tolerancing per ASME Y14.5M
   BSC: Basic Dimension. Theoretically exact value shown without tolerances.

Microchip Technology Drawing No. C04-2124A

44-Lead Plastic Thin Quad Flatpack (PT) - 10x10x1.0 mm Body [TQFP]

Note: For the most current package drawings, please see the Microchip Packaging Specification located at http://www.microchip.com/packaging

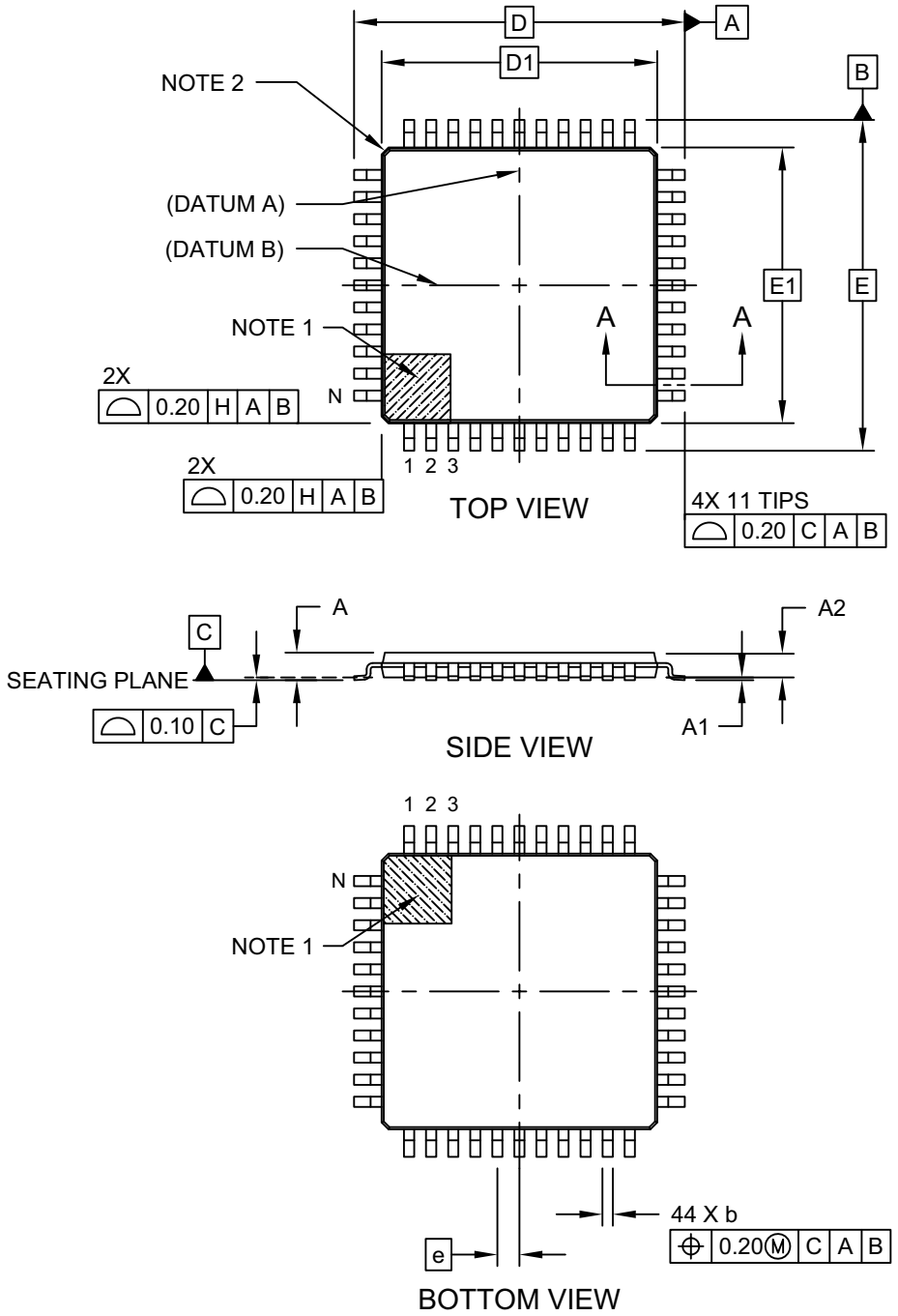

Microchip Technology Drawing C04-076C Sheet 1 of 2

© 2013-2015 Microchip Technology Inc.

44-Lead Plastic Thin Quad Flatpack (PT) - 10x10x1.0 mm Body [TQFP]

Note: For the most current package drawings, please see the Microchip Packaging Specification located at http://www.microchip.com/packaging

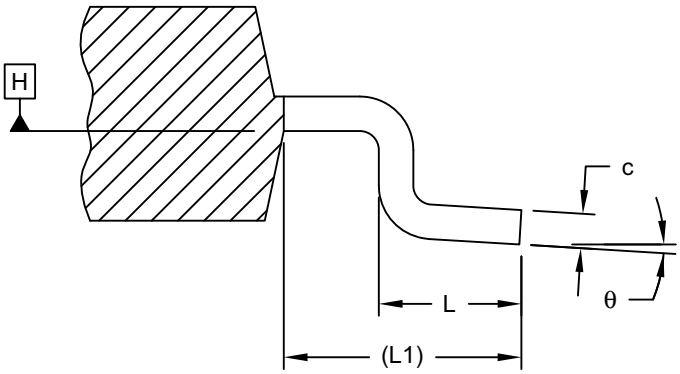

SECTION A-A

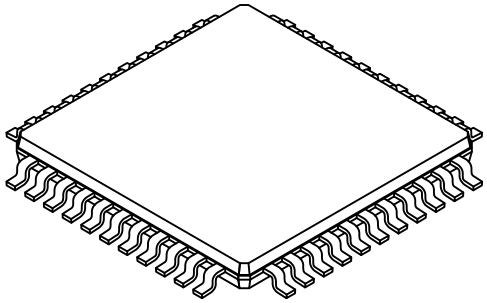

Units		MILLIMETERS		
Dimension Limits		MIN	NOM	MAX
Number of Leads	N	44		
Lead Pitch	e	0.80 BSC		
Overall Height	A	-	-	1.20
Standoff	A1	0.05	-	0.15
Molded Package Thickness	A2	0.95	1.00	1.05
Overall Width	E	12.00 BSC		
Molded Package Width	E1	10.00 BSC		
Overall Length	D	12.00 BSC		
Molded Package Length	D1	10.00 BSC		
Lead Width	b	0.30	0.37	0.45
Lead Thickness	c	0.09	-	0.20
Lead Length	L	0.45	0.60	0.75
Footprint	L1	1.00 REF		
Foot Angle	θ	0°	3.5°	7°

Notes:

1. Pin 1 visual index feature may vary, but must be located within the hatched area.
2. Exact shape of each corner is optional.
3. Dimensioning and tolerancing per ASME Y14.5M

   BSC: Basic Dimension. Theoretically exact value shown without tolerances.

   REF: Reference Dimension, usually without tolerance, for information purposes only.

Microchip Technology Drawing C04-076C Sheet 2 of 2

44-Lead Plastic Thin Quad Flatpack (PT) 10X10X1 mm Body, 2.00 mm Footprint [TQFP]

Note: For the most current package drawings, please see the Microchip Packaging Specification located at http://www.microchip.com/packaging

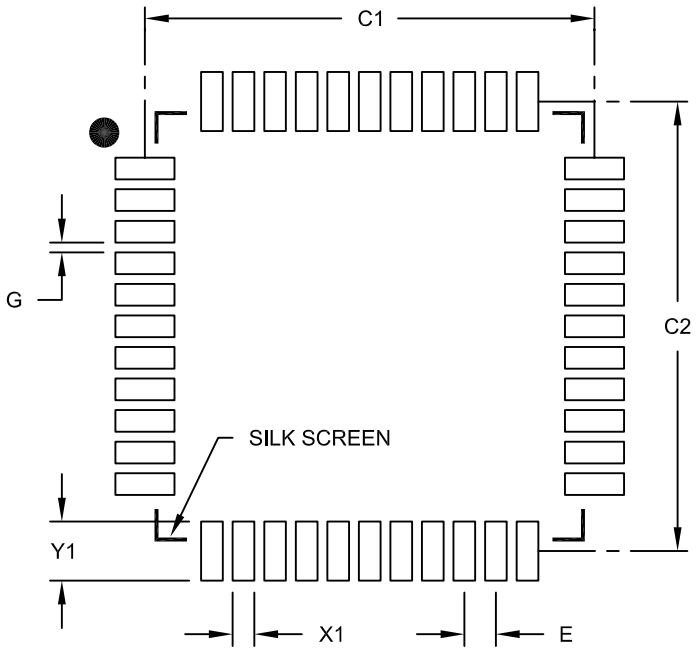

RECOMMENDED LAND PATTERN

Units		MILLIMETERS		
Dimension Limits		MIN	NOM	MAX
Contact Pitch	E	0.80 BSC		
Contact Pad Spacing	C1		11.40	
Contact Pad Spacing	C2		11.40	
Contact Pad Width (X44)	X1			0.55
Contact Pad Length (X44)	Y1			1.50
Distance Between Pads	G	0.25		

Notes:

1. Dimensioning and tolerancing per ASME Y14.5M
   BSC: Basic Dimension. Theoretically exact value shown without tolerances.

Microchip Technology Drawing No. C04-2076B

© 2013-2015 Microchip Technology Inc.

44-Lead Plastic Quad Flat, No Lead Package (ML) - 8x8 mm Body [QFN]

Note: For the most current package drawings, please see the Microchip Packaging Specification located at http://www.microchip.com/packaging

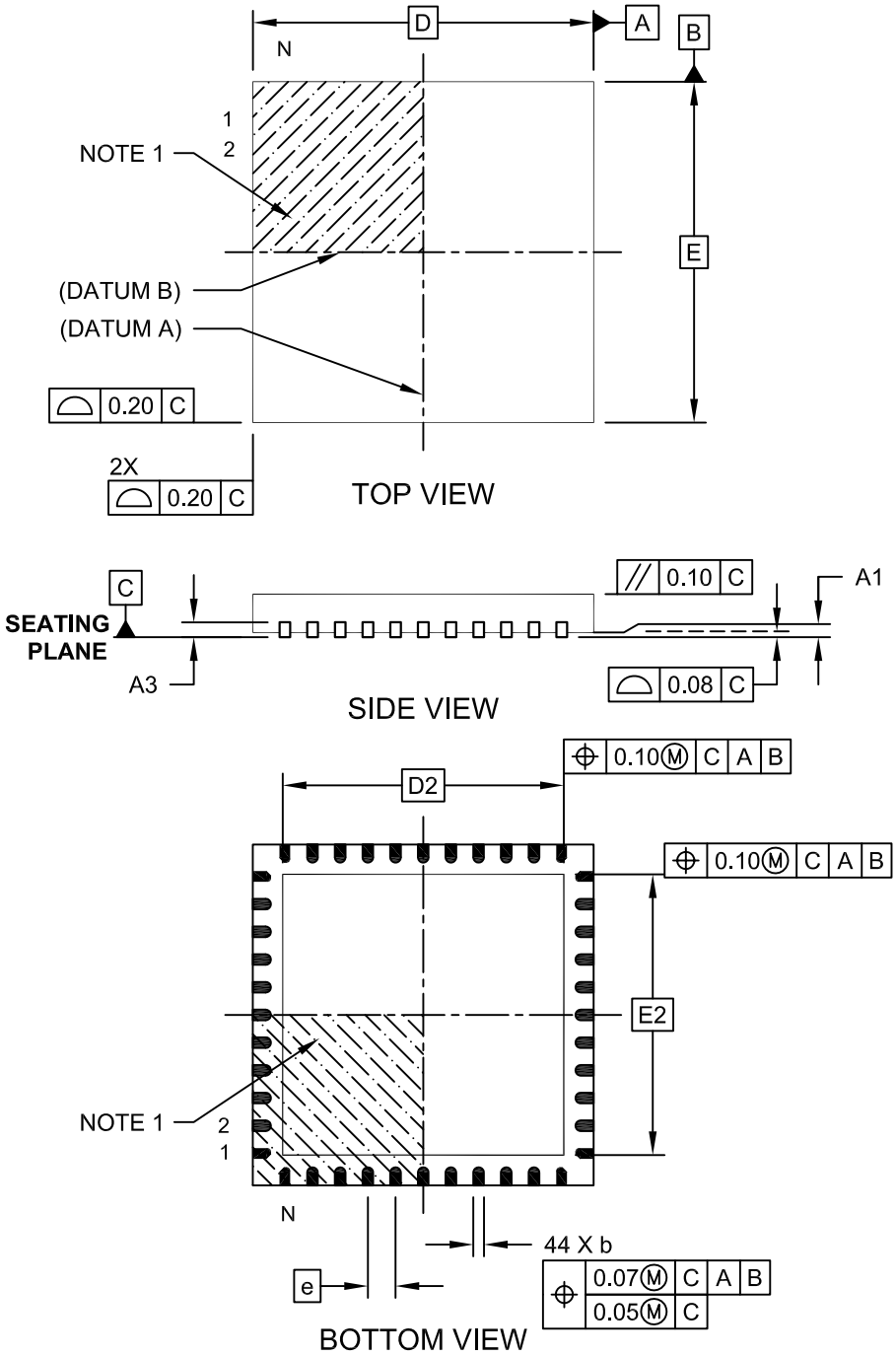

Microchip Technology Drawing C04-103C Sheet 1 of 2

44-Lead Plastic Quad Flat, No Lead Package (ML) - 8x8 mm Body [QFN]

Note: For the most current package drawings, please see the Microchip Packaging Specification located at http://www.microchip.com/packaging

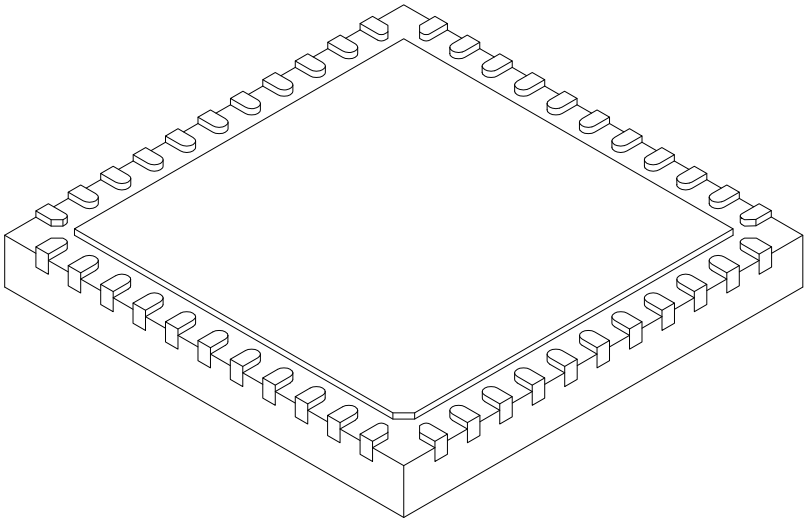

Units		MILLIMETERS		
Dimension Limits		MIN	NOM	MAX
Number of Pins	N	44		
Pitch	e	0.65 BSC		
Overall Height	A	0.80	0.90	1.00
Standoff	A1	0.00	0.02	0.05
Terminal Thickness	A3	0.20 REF		
Overall Width	E	8.00 BSC		
Exposed Pad Width	E2	6.25	6.45	6.60
Overall Length	D	8.00 BSC		
Exposed Pad Length	D2	6.25	6.45	6.60
Terminal Width	b	0.20	0.30	0.35
Terminal Length	L	0.30	0.40	0.50
Terminal-to-Exposed-Pad	K	0.20	-	-

Notes:

1. Pin 1 visual index feature may vary, but must be located within the hatched area.
2. Package is saw singulated
3. Dimensioning and tolerancing per ASME Y14.5M

   BSC: Basic Dimension. Theoretically exact value shown without tolerances.

   REF: Reference Dimension, usually without tolerance, for information purposes only.

Microchip Technology Drawing C04-103C Sheet 2 of 2

© 2013-2015 Microchip Technology Inc.

44-Lead Plastic Quad Flat, No Lead Package (ML) - 8x8 mm Body [QFN]

Note: For the most current package drawings, please see the Microchip Packaging Specification located at http://www.microchip.com/packaging

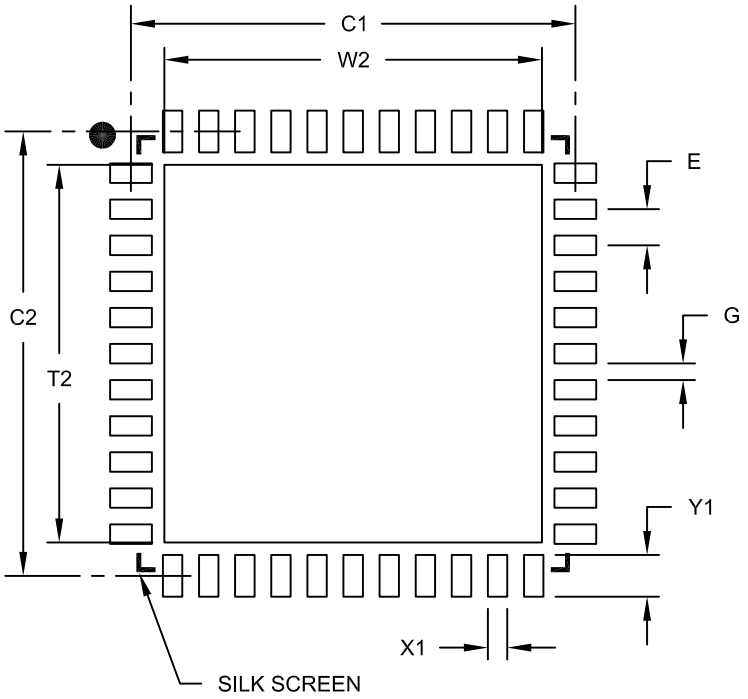

RECOMMENDED LAND PATTERN

Units		MILLIMETERS		
Dimension Limits		MIN	NOM	MAX
Contact Pitch	E		0.65 BSC	
Optional Center Pad Width	W2			6.60
Optional Center Pad Length	T2			6.60
Contact Pad Spacing	C1		8.00	
Contact Pad Spacing	C2		8.00	
Contact Pad Width (X44)	X1			0.35
Contact Pad Length (X44)	Y1			0.85
Distance Between Pads	G	0.25		

Notes:

1. Dimensioning and tolerancing per ASME Y14.5M

   BSC: Basic Dimension. Theoretically exact value shown without tolerances.

Microchip Technology Drawing No. C04-2103B

48-Lead Thin Quad Flatpack (PT) - 7x7x1.0 mm Body [TQFP] With Exposed Pad

Note: For the most current package drawings, please see the Microchip Packaging Specification located at http://www.microchip.com/packaging

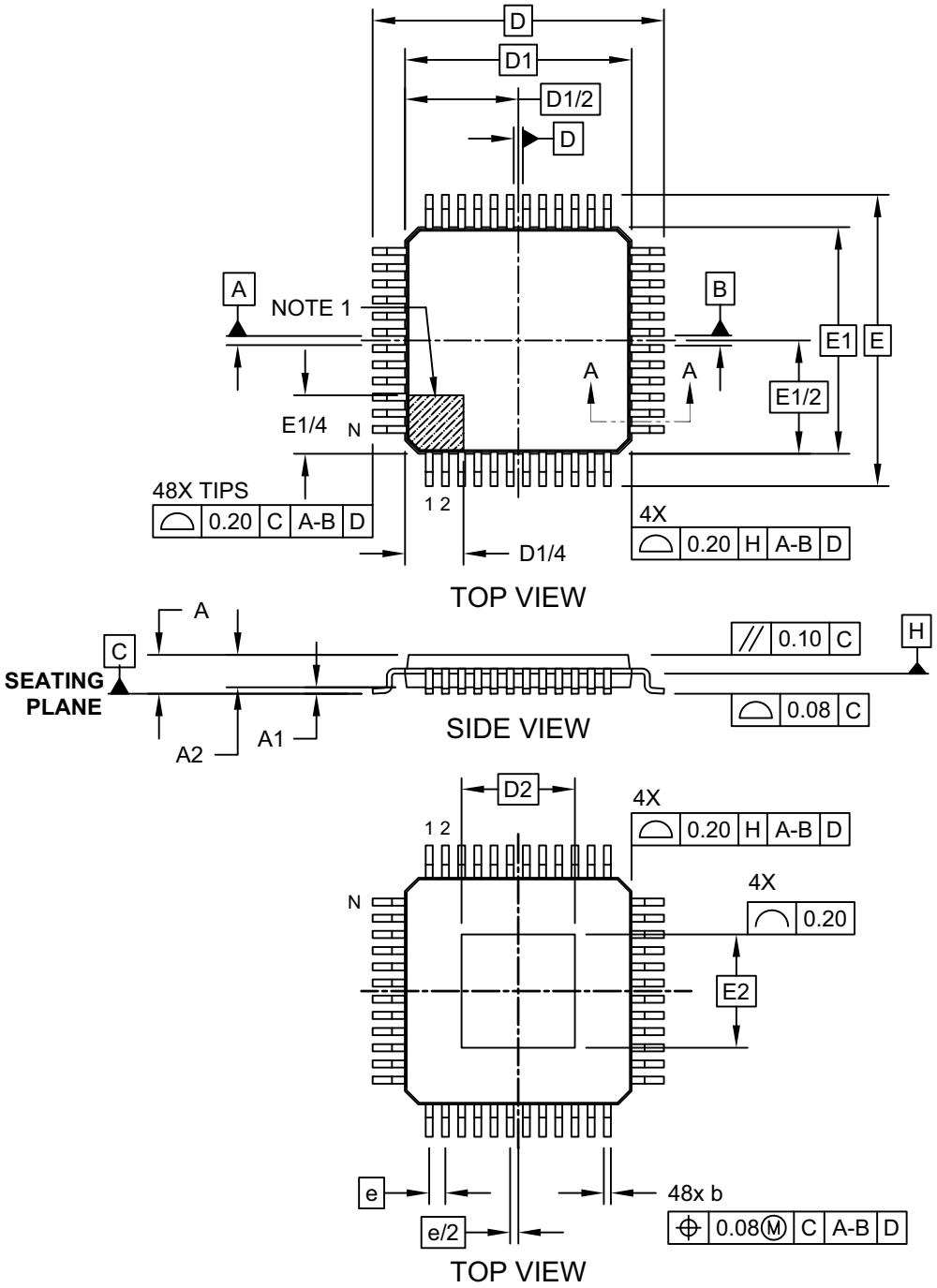

Microchip Technology Drawing C04-183A Sheet 1 of 2

© 2013-2015 Microchip Technology Inc.

48-Lead Thin Quad Flatpack (PT) - 7x7x1.0 mm Body [TQFP] With Exposed Pad

Note: For the most current package drawings, please see the Microchip Packaging Specification located at http://www.microchip.com/packaging

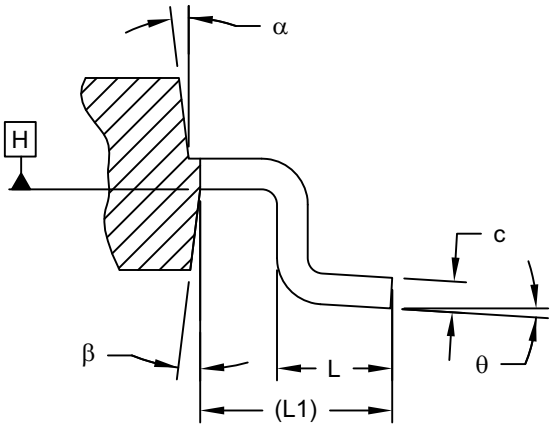

SECTION A-A

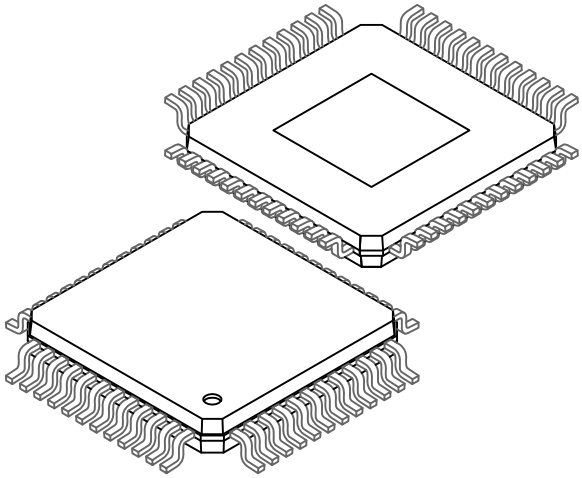

Units		MILLIMETERS		
Dimension Limits		MIN	NOM	MAX
Number of Leads	N	48		
Lead Pitch	e	0.50 BSC		
Overall Height	A	-	-	1.20
Standoff	A1	0.05	-	0.15
Molded Package Thickness	A2	0.95	1.00	1.05
Foot Length	L	0.45	0.60	0.75
Footprint	L1	1.00 REF		
Foot Angle	ϕ	0°	3.5°	7°
Overall Width	E	9.00 BSC		
Overall Length	D	9.00 BSC		
Molded Package Width	E1	7.00 BSC		
Molded Package Length	D1	7.00 BSC		
Exposed Pad Width	E2	3.50 BSC		
Exposed Pad Length	D2	3.50 BSC		
Lead Thickness	c	0.09	-	0.16
Lead Width	b	0.17	0.22	0.27
Mold Draft Angle Top	α	11°	12°	13°
Mold Draft Angle Bottom	β	11°	12°	13°

Notes:

1. Pin 1 visual index feature may vary, but must be located within the hatched area.
2. Chamfers at corners are optional; size may vary.
3. Dimensions D1 and E1 do not include mold flash or protrusions. Mold flash or protrusions shall not exceed 0.25mm per side.
4. Dimensioning and tolerancing per ASME Y14.5M

   BSC: Basic Dimension. Theoretically exact value shown without tolerances.

   REF: Reference Dimension, usually without tolerance, for information purposes only.

Microchip Technology Drawing C04-183A Sheet 2 of 2

48-Lead Thin Quad Flatpack (PT) - 7x7x1.0 mm Body [TQFP] With Thermal Tab

Note: For the most current package drawings, please see the Microchip Packaging Specification located at http://www.microchip.com/packaging

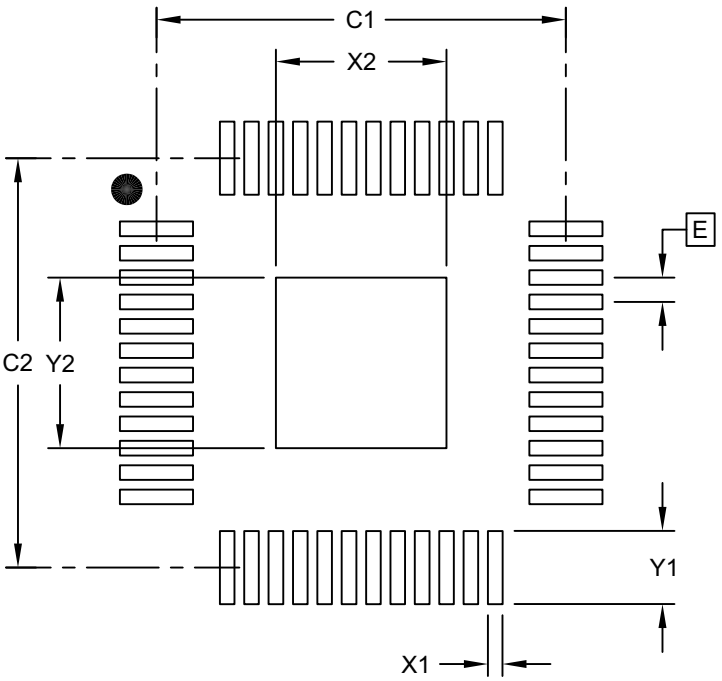

RECOMMENDED LAND PATTERN

Units		MILLIMETERS		
Dimension Limits		MIN	NOM	MAX
Contact Pitch	E	0.50 BSC		
Optional Center Tab Width	X2		3.50	
Optional Center Tab Length	Y2		3.50	
Contact Pad Spacing	C1		8.40	
Contact Pad Spacing	C2		8.40	
Contact Pad Width (X48)	X1			0.30
Contact Pad Length (X48)	Y1			1.50

Notes:

1. Dimensioning and tolerancing per ASME Y14.5M
   BSC: Basic Dimension. Theoretically exact value shown without tolerances.

Microchip Technology Drawing No. C04-2183A

© 2013-2015 Microchip Technology Inc.

64-Lead Plastic Thin Quad Flatpack (PT)-10x10x1 mm Body, 2.00 mm Footprint [TQFP]

Note: For the most current package drawings, please see the Microchip Packaging Specification located at http://www.microchip.com/packaging

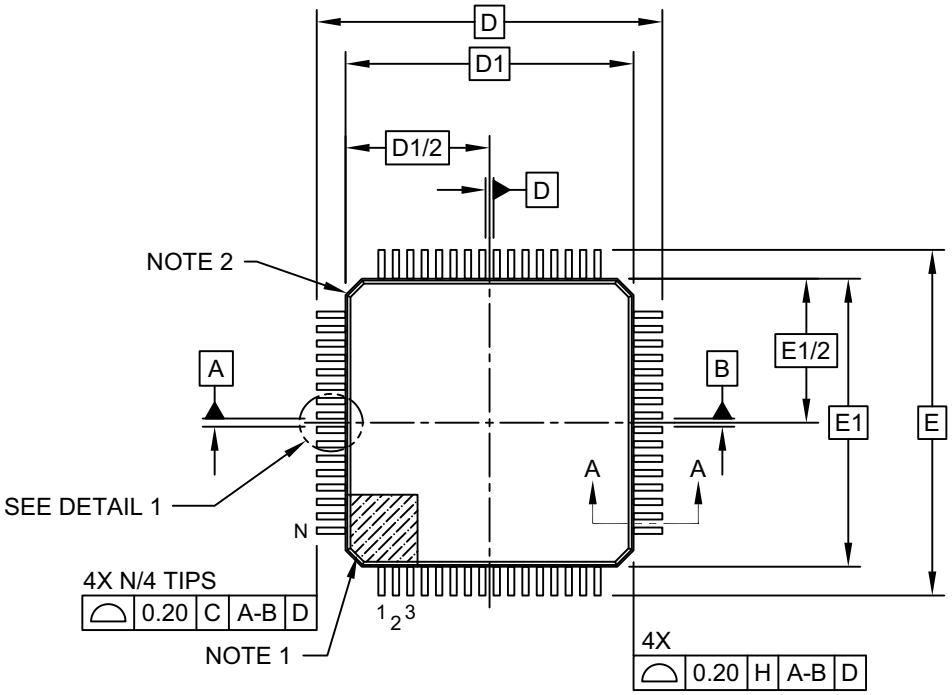

TOP VIEW

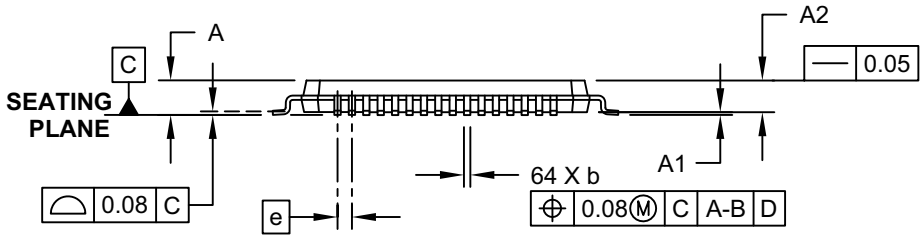

SIDE VIEW

Microchip Technology Drawing C04-085C Sheet 1 of 2

64-Lead Plastic Thin Quad Flatpack (PT)-10x10x1 mm Body, 2.00 mm Footprint [TQFP]

Note: For the most current package drawings, please see the Microchip Packaging Specification located at http://www.microchip.com/packaging

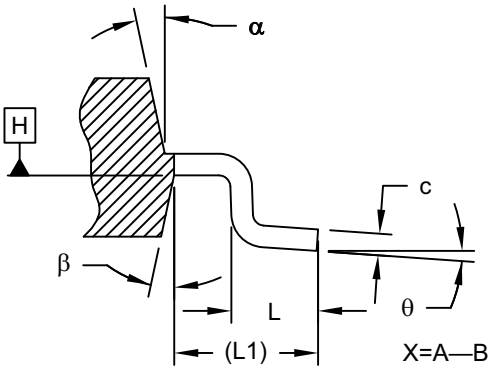

SECTION A-A

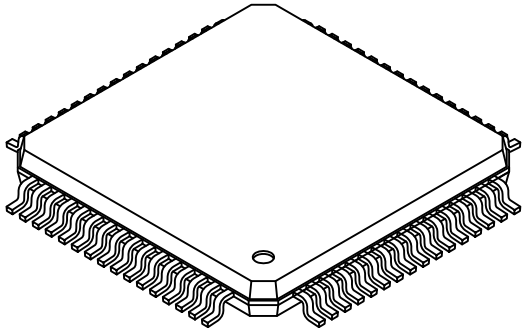

X=A—B OR D

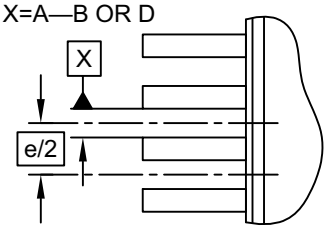

DETAIL 1

Units		MILLIMETERS		
Dimension Limits		MIN	NOM	MAX
Number of Leads	N	64		
Lead Pitch	e	0.50 BSC		
Overall Height	A	-	-	1.20
Molded Package Thickness	A2	0.95	1.00	1.05
Standoff	A1	0.05	-	0.15
Foot Length	L	0.45	0.60	0.75
Footprint	L1	1.00 REF		
Foot Angle	ϕ	0°	3.5°	7°
Overall Width	E	12.00 BSC		
Overall Length	D	12.00 BSC		
Molded Package Width	E1	10.00 BSC		
Molded Package Length	D1	10.00 BSC		
Lead Thickness	c	0.09	-	0.20
Lead Width	b	0.17	0.22	0.27
Mold Draft Angle Top	α	11°	12°	13°
Mold Draft Angle Bottom	β	11°	12°	13°

Notes:

1. Pin 1 visual index feature may vary, but must be located within the hatched area.
2. Chamfers at corners are optional; size may vary.
3. Dimensions D1 and E1 do not include mold flash or protrusions. Mold flash or protrusions shall not exceed 0.25mm per side.
4. Dimensioning and tolerancing per ASME Y14.5M

   BSC: Basic Dimension. Theoretically exact value shown without tolerances.

   REF: Reference Dimension, usually without tolerance, for information purposes only.

Microchip Technology Drawing C04-085C Sheet 2 of 2

© 2013-2015 Microchip Technology Inc.

64-Lead Plastic Thin Quad Flatpack (PT) 10x10x1 mm Body, 2.00 mm Footprint [TQFP]

Note: For the most current package drawings, please see the Microchip Packaging Specification located at http://www.microchip.com/packaging

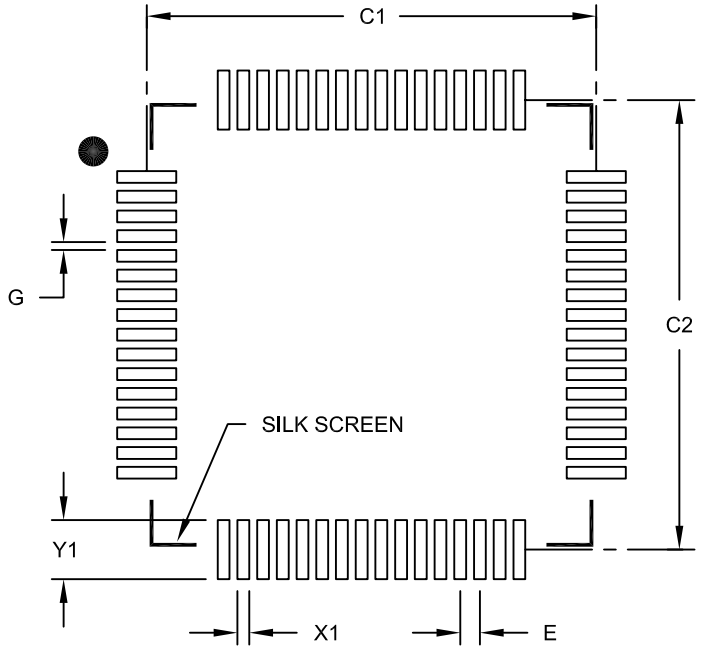

RECOMMENDED LAND PATTERN

Units		MILLIMETERS		
Dimension Limits		MIN	NOM	MAX
Contact Pitch	E	0.50 BSC		
Contact Pad Spacing	C1		11.40	
Contact Pad Spacing	C2		11.40	
Contact Pad Width (X64)	X1			0.30
Contact Pad Length (X64)	Y1			1.50
Distance Between Pads	G	0.20		

Notes:

1. Dimensioning and tolerancing per ASME Y14.5M
   BSC: Basic Dimension. Theoretically exact value shown without tolerances.

Microchip Technology Drawing No. C04-2085B

NOTES:

© 2013-2015 Microchip Technology Inc.

APPENDIX A: REVISION HISTORY

Revision A (June 2013)

This is the initial released version of the document.

Revision B (May 2015)

Adds dsPIC33EPXXGS505 (48-pin) devices to the document:

- Amends the table on page 2 to add the three new devices of this group
- Adds the 48-pin TQFP pin diagram on page 7
- Amends Table 26-3 to include thermal packaging characteristics for 48-pin packages
- Updates **Section 28.1 "Package Marking Information"** to include package marking details for 48-pin TQFP devices
- Updates **Section 28.2 "Package Details"** to include Microchip Drawings C04-183A and C04-2183A (7x7x1.0 mm 48-lead TQFP)

Changes all references to Dual Boot Flash Program Memory throughout the text to "Dual Partition Flash Program Memory". In addition, all accompanying references to "panels" and "Boot modes" are changed to "partitions" and "Partition modes". This includes, but is not limited, to:

- **Section 4.1 "Program Address Space"**
- **Section 5.4 "Dual Partition Flash Configuration"**, and Register 5-1
- **Section 23.10 "Code Protection and CodeGuard™ Security"**, and Table 23-2

Replaces the high-speed pipeline A/D Converter present in pre-production samples with a high-speed, multiple SAR A/D Converter in production devices:

- Replaces **Section 19.0 "High-Speed, 12-Bit Analog-to-Digital Converter (ADC)"** with an entirely new section of the same title, replacing all previous figures and registers
- Updates the summary bullet points under "High-Speed ADC Module" on Page 1 to reflect the feature set of the new module
- Updates Table 4-2 and Table 7-1 to reflect the new module's interrupt structure
- Replaces Table 4-15 with a new register map
- Removes Table 4-16 ("ADC Calibration Register Map"); subsequent tables are renumbered accordingly
- Updates **Section 23.2 "Device Calibration and Identification"** and Table 23-3 to remove the ADCAL registers from the Calibration register table
- Removes all references to the internal temperature sensor, including Table 26-44 (Temperature Sensor Specifications) and Figure 27-11 (Typical Temperature Sensor Voltage vs. Current)

Changes the ESR specification of the VCAP filter capacitor from < 4Ω to < 0.5Ω.

Removes the internal voltage reference in all occurrences. For analog modules, the internal band gap reference is substituted as a replacement source.

Changes the following register names in all occurrences throughout the text:

- "CMPCONx" to "CMPxCON"
- "CMPDACx" to "CMPxDAC"
- "I2CxCON1" to "I2CxCONL"
- "I2CxCON2" to "I2CxCONH"

Updates the text of **Section 5.4.2 "Dual Partition Modes"** to change "Untrusted Dual Panel mode" to "Privileged Dual Partition mode" and clarifies the mode's code security features.

Changes the BSS2 Configuration bit to "BSEN" throughout the text.

Replaces **Section 23.3 "User OTP Memory"** with new text to describe the 64-word User OTP Memory space; also removes Table 23-4.

Amends Table 24-2 with a footnote indicating an increase of instruction execution cycles for most instructions under certain conditions.

Updates the following tables in **Section 26.0 "Electrical Characteristics"** (in addition to changes previously noted):

- Table 26-4, with new specification DC12 (and accompanying footnote)
- Table 26-6, with updated Typical and new Maximum data throughout, and the addition of Parameter DC27 (with accompanying footnote)
- Table 26-7, Table 26-8 and Table 26-10 with updated Typical and Maximum data throughout
- Table 26-9 with updated Typical and Maximum data for Parameters DC61a and DC61b
- Footnotes 6 and 7 of Table 26-11 to clarify the behavior of 5V tolerant pins
- The "ADC Accuracy" specifications of Table 26-42
- Table 26-44 (Table 26-45 in Revision A) with updated specifications for Parameter CM15
- Table 26-45 (Table 26-46 in Revision A) with updated specifications for Parameters DA03 through DA06

Clarifies the text of Footnotes 6 and 7 in Table 26-11 (I/O Pin Input Specifications).

Removes the "Reference Inputs" specifications from Table 26-42 in their entirety.

Replaces Figure 27-5 through Figure 27-10 with new characterization graphs to reflect the most current data and removes "TBD" watermarks.

Updates **Section 28.1 "Package Marking Information"** to reflect the removal of redundant temperature and package code information from all package markings; this is in addition to the new 48-pin package markings previously described.

Other minor typographic corrections throughout the document.

NOTES:

© 2013-2015 Microchip Technology Inc.

INDEX

A

Absolute Maximum Ratings 301
AC Characteristics 313
    ADC Specifications 341
    Analog-to-Digital Conversion Requirements 343
    Auxiliary PLL Clock 315
    Capacitive Loading Requirements on
        Output Pins 313
    External Clock Requirements 314
    High-Speed PWMx Requirements 323
    I/O Requirements 317
    I2Cx Bus Data Requirements (Master Mode) 337
    I2Cx Bus Data Requirements (Slave Mode) 339
    Input Capture x Requirements 321
    Internal FRC Accuracy 316
    Internal LPRC Accuracy 316
    Load Conditions 313
    OCx/PWMx Mode Requirements 322
    Output Compare x Requirements 322
    PLL Clock 315
    Reset, WDT, OST, PWRT Requirements 318
    SPIx Master Mode (Full-Duplex, CKE = 0,
        CKP = x, SMP = 1) Requirements 327
    SPIx Master Mode (Full-Duplex, CKE = 1,
        CKP = x, SMP = 1) Requirements 326
    SPIx Master Mode (Half-Duplex,
        Transmit Only) Requirements 325
    SPIx Maximum Data/Clock Rate Summary 324
    SPIx Slave Mode (Full-Duplex, CKE = 0,
        CKP = 0, SMP = 0) Requirements 335
    SPIx Slave Mode (Full-Duplex, CKE = 0,
        CKP = 1, SMP = 0) Requirements 333
    SPIx Slave Mode (Full-Duplex, CKE = 1,
        CKP = 0, SMP = 0) Requirements 329
    SPIx Slave Mode (Full-Duplex, CKE = 1,
        CKP = 1, SMP = 0) Requirements 331
    Temperature and Voltage Specifications 313
    Timer1 External Clock Requirements 319
    Timer2/Timer4 External Clock Requirements 320
    Timer3/Timer5 External Clock Requirements 320
    UARTx I/O Requirements 340
AC/DC Characteristics
    DACx Specifications 344
    High-Speed Analog Comparator Specifications 343
    PGAx Specifications 345
Analog-to-Digital Converter. *See* ADC.
Arithmetic Logic Unit (ALU) 30
Assembler
    MPASM Assembler 298
    MPLAB Assembler, Linker, Librarian 298

B

Bit-Reversed Addressing 73
    Example 74
    Implementation 73
    Sequence Table (16-Entry) 74
Block Diagrams
    16-Bit Timer1 Module 163
    ADC Module 230
    ADC Shared Core 231
    Addressing for Table Registers 77
    CALL Stack Frame 69
    Connections for On-Chip Voltage Regulator 283
    Constant-Current Source 273
    CPU Core 22
    Data Access from Program Space
        Address Generation 75
    Dedicated ADC Cores 0-3 231
    dsPIC33EPXXGS50X Family 11
    High-Speed Analog Comparator x 262
    High-Speed PWM Architecture 183
    Hysteresis Control 264
    I2Cx Module 216
    Input Capture x 171
    Interleaved PFC 18
    MCLR Pin Connections 16
    Multiplexing Remappable Outputs for RPn 130
    Off-Line UPS 20
    Oscillator System 104
    Output Compare x Module 175
    PGAx Functions 270
    PGAx Module 269
    Phase-Shifted Full-Bridge Converter 19
    PLL Module 105
    Programmer's Model 24
    PSV Read Address Generation 66
    Recommended Minimum Connection 16
    Remappable Input for U1RX 128
    Reset System 85
    Security Segments for dsPIC33EP64GS50X 286
    Security Segments for dsPIC33EP64GS50X
        (Dual Partition Mode) 286
    Shared Port Structure 125
    Simplified Conceptual of High-Speed PWM 184
    SPIx Module 207
    Suggested Oscillator Circuit Placement 17
    Timerx (x = 2 through 5) 168
    Type B/Type C Timer Pair (32-Bit Timer) 168
    UARTx Module 223
    Watchdog Timer (WDT) 284
Brown-out Reset (BOR) 275, 283

C

C Compilers
    MPLAB XC 298
Code Examples
    Port Write/Read 126
    PWM Write-Protected Register
        Unlock Sequence 182
    PWRSAV Instruction Syntax 115
Code Protection 275, 285
CodeGuard Security 275, 285
Configuration Bits 275
    Description 278
Configuration Register Map 276
Constant-Current Source 273
    Control Register 274
    Description 273
    Features Overview 273

CPU
Addressing Modes 21
Clocking System Options 105
Fast RC (FRC) Oscillator 105
FRC Oscillator with PLL (FRCPLL) 105
FRC Oscillator with Postscaler 105
Low-Power RC (LPRC) Oscillator 105
Primary (XT, HS, EC) Oscillator 105
Primary Oscillator with PLL 105
Control Registers 26
Data Space Addressing 21
Instruction Set 21
Registers 21
Resources 25
Customer Change Notification Service 382
Customer Notification Service 382
Customer Support 382

D

Data Address Space 37
Memory Map for dsPIC33EP16GS50X Devices 38
Memory Map for dsPIC33EP32GS50X Devices 39
Memory Map for dsPIC33EP64GS50X Devices 40
Near Data Space 37
Organization, Alignment 37
SFR Space 37
Width 37
Data Space
Extended X 69
Paged Data Memory Space (figure) 67
Paged Memory Scheme 66
DC Characteristics
Brown-out Reset (BOR) 311
Constant-Current Source Specifications 345
DACx Output (DACOUTx Pin) Specifications 344
Doze Current (IDOZE) 307
I/O Pin Input Specifications 308
I/O Pin Output Specifications 311
Idle Current (IIDLE) 305
Operating Current (IDD) 304
Operating MIPS vs. Voltage 302
Power-Down Current (IPD) 306
Program Memory 312
Temperature and Voltage Specifications 303
Watchdog Timer Delta Current (ΔIWDT) 306
DC/AC Characteristics
Graphs and Tables 347
Demo/Development Boards, Evaluation and
Starter Kits 300
Development Support 297
Device Calibration 281
Addresses 281
and Identification 281
Device Programmer
MPLAB PM3 299
Doze Mode 117
DSP Engine 30

E

Electrical Characteristics 301
AC 313
Equations
Device Operating Frequency 105
FPLLO Calculation 105
FVCO Calculation 105
Errata 10

F

Filter Capacitor (CEFC) Specifications 303
Flash Program Memory 77
and Table Instructions 77
Control Registers 80
Dual Partition Flash Configuration 79
Operations 78
Resources 79
RTSP Operation 78
Flexible Configuration 275

G

Getting Started Guidelines 15
Connection Requirements 15
CPU Logic Filter Capacitor Connection (VCAP) 16
Decoupling Capacitors 15
External Oscillator Pins 17
ICSP Pins 17
Master Clear ($\overline{\text{MCLR}}$) Pin 16
Oscillator Value Conditions on Start-up 18
Targeted Applications 18
Unused I/Os 18

H

High-Speed Analog Comparator
Applications 263
Description 262
Digital-to-Analog Comparator (DAC) 263
Features Overview 261
Hysteresis 264
Pulse Stretcher and Digital Logic 263
Resources 264
High-Speed PWM
Description 181
Features 181
Resources 182
Write-Protected Registers 182
High-Speed, 12-Bit Analog-to-Digital
Converter (ADC) 229
Control Registers 232
Features Overview 229
Resources 232

I

I/O Ports 125
Configuring Analog/Digital Port Pins 126
Helpful Tips 132
Open-Drain Configuration 126
Parallel I/O (PIO) 125
Resources 133
Write/Read Timing 126
I^2C
In-Circuit Debugger 285
MPLAB ICD 3 299
PICkit 3 Programmer 299
In-Circuit Emulation 275
In-Circuit Serial Programming (ICSP) 275, 285
Input Capture 171
Control Registers 172
Resources 171
Input Change Notification (ICN) 126

© 2013-2015 Microchip Technology Inc.

Instruction Addressing Modes 70
File Register Instructions 70
Fundamental Modes Supported 70
MAC Instructions 71
MCU Instructions 70
Move and Accumulator Instructions 71
Other Instructions 71
Instruction Set Summary 287
Overview 290
Symbols Used in Opcode Descriptions 288
Instruction-Based Power-Saving Modes 115
Idle 116
Sleep 116
Inter-Integrated Circuit (I^2C) 215
Control Registers 217
Resources 215
Inter-Integrated Circuit. *See* I^2C.
Internet Address 382
Interrupt Controller
Alternate Interrupt Vector Table (AIVT) 89
Control and Status Registers 95
INTCON1 95
INTCON2 95
INTCON3 95
INTCON4 95
INTTREG 95
Interrupt Vector Details 92
Interrupt Vector Table (IVT) 89
Reset Sequence 89
Resources 95
Interrupts Coincident with Power Save Instructions 116

J

JTAG Boundary Scan Interface 275
JTAG Interface 285

L

Leading-Edge Blanking (LEB) 181
LPRC Oscillator
Use with WDT 284

M

Memory Organization 31
Resources 41
Microchip Internet Web Site 382
Modulo Addressing 72
Applicability 73
Operation Example 72
Start and End Address 72
W Address Register Selection 72
MPLAB REAL ICE In-Circuit Emulator System 299
MPLAB X Integrated Development
Environment Software 297
MPLINK Object Linker/MPLIB Object Librarian 298

O

Oscillator
Control Registers 107
Resources 106
Output Compare 175
Control Registers 176
Resources 175

P

Packaging 351
Details 353
Marking 351
Peripheral Module Disable (PMD) 117
Peripheral Pin Select (PPS) 127
Available Peripherals 127
Available Pins 127
Control 127
Control Registers 134
Input Mapping 128
Output Mapping 130
Output Selection for Remappable Pins 131
Selectable Input Sources 129
Pinout I/O Descriptions (table) 12
Power-Saving Features 115
Clock Frequency and Switching 115
Resources 117
Program Address Space 31
Construction 75
Data Access from Program Memory Using
Table Instructions 76
Memory Map (dsPIC33EP16GS50X Devices) 32
Memory Map (dsPIC33EP32GS50X Devices) 33
Memory Map (dsPIC33EP64GS50X Devices,
Dual Partition) 35
Memory Map (dsPIC33EP64GS50X Devices) 34
Table Read High Instructions (TBLRDH) 76
Table Read Low Instructions (TBLRDL) 76
Program Memory
Interfacing with Data Memory Spaces 75
Organization 36
Reset Vector 36
Programmable Gain Amplifier (PGA) 269
Description 270
Resources 271
Programmable Gain Amplifier. *See* PGA.
Programmer's Model 23
Register Descriptions 23

R

Register Maps
ADC 54
Analog Comparator 61
Constant-Current Source 60
CPU Core 42
I2C1 and I2C2 52
Input Capture 1 through Input Capture 4 47
Interrupt Controller 44
JTAG Interface 61
NVM 59
Output Compare 1 through Output Compare 4 48
Peripheral Pin Select Input 58
Peripheral Pin Select Output
(dsPIC33EPXXGS502 Devices) 56
Peripheral Pin Select Output
(dsPIC33EPXXGS504/505 Devices) 56
Peripheral Pin Select Output
(dsPIC33EPXXGS506 Devices) 57
PMD 60

PORTA (dsPIC33EPXXGS502 Devices) 62
PORTA (dsPIC33EPXXGS504/505 Devices) 63
PORTA (dsPIC33EPXXGS506 Devices) 64
PORTB (dsPIC33EPXXGS502 Devices) 62
PORTB (dsPIC33EPXXGS504/505 Devices) 63
PORTB (dsPIC33EPXXGS506 Devices) 64
PORTC (dsPIC33EPXXGS504/505 Devices) 63
PORTC (dsPIC33EPXXGS506 Devices) 64
PORTD (dsPIC33EPXXGS506 Devices) 65
Programmable Gain 60
PWM 49
PWM Generator 1 49
PWM Generator 2 50
PWM Generator 3 50
PWM Generator 4 51
PWM Generator 5 51
SPI1 and SPI2 53
System Control 59
Timer1 through Timer5 46
UART1 and UART2 52
Registers
ACLKCON (Auxiliary Clock Divisor Control) 112
ADCAL0L (ADC Calibration 0 High) 254
ADCAL0L (ADC Calibration 0 Low) 253
ADCAL1H (ADC Calibration 1 High) 255
ADCMPxCON (ADC Digital Comparator x Control) 256
ADCMPxENH (ADC Digital Comparator x Channel Enable High) 257
ADCMPxENL (ADC Digital Comparator x Channel Enable Low) 257
ADCON1H (ADC Control 1 High) 233
ADCON1L (ADC Control 1 Low) 232
ADCON2H (ADC Control 2 High) 235
ADCON2L (ADC Control 2 Low) 234
ADCON3H (ADC Control 3 High) 237
ADCON3L (ADC Control 3 Low) 236
ADCON4H (ADC Control 4 High) 239
ADCON4L (ADC Control 4 Low) 238
ADCON5H (ADC Control 5 High) 241
ADCON5L (ADC Control 5 Low) 240
ADCORExH (Dedicated ADC Core x Control High) 243
ADCORExL (Dedicated ADC Core x Control Low) 242
ADEIEH (ADC Early Interrupt Enable High) 245
ADEIEL (ADC Early Interrupt Enable Low) 245
ADEISTATH (ADC Early Interrupt Status High) 246
ADEISTATL (ADC Early Interrupt Status Low) 246
ADFLxCON (ADC Digital Filter x Control) 258
ADIEH (ADC Interrupt Enable High) 249
ADIEL (ADC Interrupt Enable Low) 249
ADLVLTRGH (ADC Level-Sensitive Trigger Control High) 244
ADLVLTRGL (ADC Level-Sensitive Trigger Control Low) 244
ADMOD0H (ADC Input Mode Control 0 High) 247
ADMOD0L (ADC Input Mode Control 0 Low) 247
ADMOD1L (ADC Input Mode Control 1 Low) 248
ADSTATH (ADC Data Ready Status High) 250
ADSTATL (ADC Data Ready Status Low) 250
ADTRIGxL/ADTRIGxH (ADC Channel Trigger x Selection Low/High) 251
ALTDTRx (PWMx Alternate Dead-Time) 197
AUXCONx (PWMx Auxiliary Control) 205
CHOP (PWMx Chop Clock Generator) 190
CLKDIV (Clock Divisor) 109
CMPxCON (Comparator x Control) 265
CMPxDAC (Comparator x DAC Control) 267
CORCON (Core Control) 28, 97
CTXTSTAT (CPU W Register Context Status) 29
DEVID (Device ID) 282
DEVREV (Device Revision) 282
DTRx (PWMx Dead-Time) 197
FCLCONx (PWMx Fault Current-Limit Control) 201
I2CxCONH (I2Cx Control High) 219
I2CxCONL (I2Cx Control Low) 217
I2CxMSK (I2Cx Slave Mode Address Mask) 222
I2CxSTAT (I2Cx Status) 220
ICxCON1 (Input Capture x Control 1) 172
ICxCON2 (Input Capture x Control 2) 173
INTCON1 (Interrupt Control 1) 98
INTCON2 (Interrupt Control 2) 100
INTCON3 (Interrupt Control 3) 101
INTCON4 (Interrupt Control 4) 101
INTTREG (Interrupt Control and Status) 102
IOCONx (PWMx I/O Control) 199
ISRCCON (Constant-Current Source Control) 274
LEBCONx (PWMx Leading-Edge Blanking Control) 203
LEBDLYx (PWMx Leading-Edge Blanking Delay) 204
LFSR (Linear Feedback Shift) 114
MDC (PWMx Master Duty Cycle) 191
NVMADR (Nonvolatile Memory Lower Address) 83
NVMADRU (Nonvolatile Memory Upper Address) 83
NVMCON (Nonvolatile Memory (NVM) Control) 81
NVMKEY (Nonvolatile Memory Key) 84
NVMSRCADR (NVM Source Data Address) 84
OCxCON1 (Output Compare x Control 1) 176
OCxCON2 (Output Compare x Control 2) 178
OSCCON (Oscillator Control) 107
OSCTUN (FRC Oscillator Tuning) 111
PDCx (PWMx Generator Duty Cycle) 194
PGAxCAL (PGAx Calibration) 272
PGAxCON (PGAx Control) 271
PHASEx (PWMx Primary Phase-Shift) 195
PLLFBD (PLL Feedback Divisor) 110
PMD1 (Peripheral Module Disable Control 1) 118
PMD2 (Peripheral Module Disable Control 2) 119
PMD3 (Peripheral Module Disable Control 3) 120
PMD4 (Peripheral Module Disable Control 4) 120
PMD6 (Peripheral Module Disable Control 6) 121
PMD7 (Peripheral Module Disable Control 7) 122
PMD8 (Peripheral Module Disable Control 8) 123
PTCON (PWMx Time Base Control) 185
PTCON2 (PWMx Clock Divider Select 2) 186
PTPER (PWMx Primary Master Time Base Period) 187
PWMCAPx (PWMx Primary Time Base Capture) 206
PWMCONx (PWMx Control) 192
PWMKEY (PWMx Protection Lock/Unlock Key) 191
RCON (Reset Control) 87
REFOCON (Reference Oscillator Control) 113
RPINR0 (Peripheral Pin Select Input 0) 134
RPINR1 (Peripheral Pin Select Input 1) 134
RPINR11 (Peripheral Pin Select Input 11) 139

© 2013-2015 Microchip Technology Inc.

RPINR12 (Peripheral Pin Select Input 12)..... 140
RPINR13 (Peripheral Pin Select Input 13)..... 141
RPINR18 (Peripheral Pin Select Input 18)..... 142
RPINR19 (Peripheral Pin Select Input 19)..... 143
RPINR2 (Peripheral Pin Select Input 2)..... 135
RPINR20 (Peripheral Pin Select Input 20)..... 144
RPINR21 (Peripheral Pin Select Input 21)..... 145
RPINR22 (Peripheral Pin Select Input 22)..... 146
RPINR23 (Peripheral Pin Select Input 23)..... 147
RPINR3 (Peripheral Pin Select Input 3)..... 136
RPINR37 (Peripheral Pin Select Input 37)..... 148
RPINR38 (Peripheral Pin Select Input 38)..... 149
RPINR42 (Peripheral Pin Select Input 42)..... 150
RPINR43 (Peripheral Pin Select Input 43)..... 151
RPINR7 (Peripheral Pin Select Input 7)..... 137
RPINR8 (Peripheral Pin Select Input 8)..... 138
RPOR0 (Peripheral Pin Select Output 0)..... 152
RPOR1 (Peripheral Pin Select Output 1)..... 152
RPOR10 (Peripheral Pin Select Output 10)..... 157
RPOR11 (Peripheral Pin Select Output 11)..... 157
RPOR12 (Peripheral Pin Select Output 12)..... 158
RPOR13 (Peripheral Pin Select Output 13)..... 158
RPOR14 (Peripheral Pin Select Output 14)..... 159
RPOR15 (Peripheral Pin Select Output 15)..... 159
RPOR16 (Peripheral Pin Select Output 16)..... 160
RPOR17 (Peripheral Pin Select Output 17)..... 160
RPOR18 (Peripheral Pin Select Output 18)..... 161
RPOR2 (Peripheral Pin Select Output 2)..... 153
RPOR3 (Peripheral Pin Select Output 3)..... 153
RPOR4 (Peripheral Pin Select Output 4)..... 154
RPOR5 (Peripheral Pin Select Output 5)..... 154
RPOR6 (Peripheral Pin Select Output 6)..... 155
RPOR7 (Peripheral Pin Select Output 7)..... 155
RPOR8 (Peripheral Pin Select Output 8)..... 156
RPOR9 (Peripheral Pin Select Output 9)..... 156
SDCx (PWMx Secondary Duty Cycle)..... 194
SEVTCMP (PWMx Special Event Compare)..... 187
SPHASEx (PWMx Secondary Phase-Shift)..... 196
SPIxCON1 (SPIx Control 1)..... 211
SPIxCON2 (SPIx Control 2)..... 213
SPIxSTAT (SPIx Status and Control) 209
SR (CPU STATUS)..... 26, 96
SSEVTCMP (PWMx Secondary
Special Event Compare)..... 190
STCON (PWMx Secondary Master
Time Base Control)..... 188
STCON2 (PWMx Secondary Clock Divider
Select 2)..... 189
STPER (PWMx Secondary Master
Time Base Period) 189
STRIGx (PWMx Secondary Trigger
Compare Value)..... 202
T1CON (Timer1 Control)..... 165
TRGCONx (PWMx Trigger Control)..... 198
TRIGx (PWMx Primary Trigger
Compare Value)..... 200
TxCON (Timer2/4 Control)..... 169
TyCON (Timer3/5 Control)..... 170
UxMODE (UARTx Mode)..... 225
UxSTA (UARTx Status and Control)..... 227
Resets 85
Brown-out Reset (BOR)..... 85
Configuration Mismatch Reset (CM) 85
Illegal Condition Reset (IOPUWR) 85
Illegal Opcode 85
Security 85
Uninitialized W Register 85
Master Clear ($\overline{\text{MCLR}}$) Pin Reset..... 85
Power-on Reset (POR)..... 85
`RESET` Instruction (SWR) 85
Resources 86
Trap Conflict Reset (TRAPR) 85
Watchdog Timer Time-out Reset (WDTO) 85
Revision History..... 375

S

Serial Peripheral Interface (SPI)..... 207
Serial Peripheral Interface. *See* SPI.
Software Simulator
MPLAB X SIM..... 299
Special Features of the CPU 275
SPI
Control Registers..... 209
Helpful Tips..... 208
Resources 208

T

Thermal Operating Conditions..... 302
Thermal Packaging Characteristics..... 302
Third-Party Development Tools..... 300
Timer1 163
Control Register..... 165
Mode Settings..... 163
Resources 164
Timer2/3 and Timer4/5 167
Control Registers..... 169
Resources 167
Timing Diagrams
BOR and Master Clear Reset Characteristics..... 317
External Clock 314
High-Speed PWMx Fault Characteristics 323
High-Speed PWMx Module Characteristics 323
I/O Characteristics..... 317
I2Cx Bus Data (Master Mode)..... 336
I2Cx Bus Data (Slave Mode)..... 338
I2Cx Bus Start/Stop Bits (Master Mode)..... 336
I2Cx Bus Start/Stop Bits (Slave Mode)..... 338
Input Capture x (ICx) Characteristics 321
OCx/PWMx Characteristics..... 322
Output Compare x (OCx) Characteristics..... 322
SPIx Master Mode (Full-Duplex, CKE = 0,
CKP = x, SMP = 1) 327
SPIx Master Mode (Full-Duplex, CKE = 1,
CKP = x, SMP = 1) 326
SPIx Master Mode (Half-Duplex,
Transmit Only, CKE = 0) 324
SPIx Master Mode (Half-Duplex,
Transmit Only, CKE = 1) 325
SPIx Slave Mode (Full-Duplex, CKE = 0,
CKP = 0, SMP = 0)..... 334

SPIx Slave Mode (Full-Duplex, CKE = 0, CKP = 1, SMP = 0) 332
SPIx Slave Mode (Full-Duplex, CKE = 1, CKP = 0, SMP = 0) 328
SPIx Slave Mode (Full-Duplex, CKE = 1, CKP = 1, SMP = 0) 330
Timer1-Timer5 External Clock Characteristics..... 319
UARTx I/O Characteristics..... 340

U

Universal Asynchronous Receiver Transmitter (UART)..... 223
Control Registers 225
Helpful Tips 224
Resources 224
Universal Asynchronous Receiver Transmitter. *See* UART.
User OTP Memory 283

V

Voltage Regulator (On-Chip) 283

W

Watchdog Timer (WDT)..... 275, 284
Programming Considerations 284
WWW Address 382
WWW, On-Line Support 10

© 2013-2015 Microchip Technology Inc.

THE MICROCHIP WEB SITE

Microchip provides online support via our WWW site at www.microchip.com. This web site is used as a means to make files and information easily available to customers. Accessible by using your favorite Internet browser, the web site contains the following information:

- **Product Support** – Data sheets and errata, application notes and sample programs, design resources, user's guides and hardware support documents, latest software releases and archived software
- **General Technical Support** – Frequently Asked Questions (FAQ), technical support requests, online discussion groups, Microchip consultant program member listing
- **Business of Microchip** – Product selector and ordering guides, latest Microchip press releases, listing of seminars and events, listings of Microchip sales offices, distributors and factory representatives

CUSTOMER CHANGE NOTIFICATION SERVICE

Microchip's customer notification service helps keep customers current on Microchip products. Subscribers will receive e-mail notification whenever there are changes, updates, revisions or errata related to a specified product family or development tool of interest.

To register, access the Microchip web site at www.microchip.com. Under "Support", click on "Customer Change Notification" and follow the registration instructions.

CUSTOMER SUPPORT

Users of Microchip products can receive assistance through several channels:

- Distributor or Representative
- Local Sales Office
- Field Application Engineer (FAE)
- Technical Support

Customers should contact their distributor, representative or Field Application Engineer (FAE) for support. Local sales offices are also available to help customers. A listing of sales offices and locations is included in the back of this document.

Technical support is available through the web site at: http://microchip.com/support

NOTES:

© 2013-2015 Microchip Technology Inc.

PRODUCT IDENTIFICATION SYSTEM

To order or obtain information, e.g., on pricing or delivery, refer to the factory or the listed sales office.

dsPIC 33 EP 64 GS5 04 T I / PT - XXX

- **Microchip Trademark**
- **Architecture**
- **Flash Memory Family**
- **Program Memory Size (Kbyte)**
- **Product Group**
- **Pin Count**
- **Tape and Reel Flag (if applicable)**
- **Temperature Range**
- **Package**
- **Pattern**

Architecture:	33	=	16-Bit Digital Signal Controller
Flash Memory Family:	EP	=	Enhanced Performance
Product Group:	GS	=	SMPS Family
Pin Count:	02	=	28-pin
	04	=	44-pin
	05	=	48-pin
	06	=	64-pin
Temperature Range:	I	=	-40°C to +85°C (Industrial)
	E	=	-40°C to +125°C (Extended)
Package:	ML	=	Plastic Quad, No Lead Package – (44-pin) 8x8 mm body (QFN)
	MM	=	Plastic Quad, No Lead Package – (28-pin) 6x6 mm body (QFN-S)
	MX	=	Plastic Quad Flat, No Lead Package – (28-pin) 6x6 mm body (UQFN)
	PT	=	Plastic Thin Quad Flatpack – (44-pin) 10x10 mm body (TQFP)
	PT	=	Plastic Thin Quad Flatpack – (48-pin) 7x7 mm body (TQFP)
	PT	=	Plastic Thin Quad Flatpack – (64-pin) 10x10 mm body (TQFP)
	SO	=	Plastic Small Outline, Wide – (28-pin) 7.50 mm body (SOIC)

Examples:

dsPIC33EP64GS504-I/PT:
dsPIC33, Enhanced Performance, 64-Kbyte Program Memory, SMPS, 44-Pin, Industrial Temperature, TQFP Package.

NOTES:

© 2013-2015 Microchip Technology Inc.

Note the following details of the code protection feature on Microchip devices:

- Microchip products meet the specification contained in their particular Microchip Data Sheet.
- Microchip believes that its family of products is one of the most secure families of its kind on the market today, when used in the intended manner and under normal conditions.
- There are dishonest and possibly illegal methods used to breach the code protection feature. All of these methods, to our knowledge, require using the Microchip products in a manner outside the operating specifications contained in Microchip's Data Sheets. Most likely, the person doing so is engaged in theft of intellectual property.
- Microchip is willing to work with the customer who is concerned about the integrity of their code.
- Neither Microchip nor any other semiconductor manufacturer can guarantee the security of their code. Code protection does not mean that we are guaranteeing the product as "unbreakable."

Code protection is constantly evolving. We at Microchip are committed to continuously improving the code protection features of our products. Attempts to break Microchip's code protection feature may be a violation of the Digital Millennium Copyright Act. If such acts allow unauthorized access to your software or other copyrighted work, you may have a right to sue for relief under that Act.

Information contained in this publication regarding device applications and the like is provided only for your convenience and may be superseded by updates. It is your responsibility to ensure that your application meets with your specifications. MICROCHIP MAKES NO REPRESENTATIONS OR WARRANTIES OF ANY KIND WHETHER EXPRESS OR IMPLIED, WRITTEN OR ORAL, STATUTORY OR OTHERWISE, RELATED TO THE INFORMATION, INCLUDING BUT NOT LIMITED TO ITS CONDITION, QUALITY, PERFORMANCE, MERCHANTABILITY OR FITNESS FOR PURPOSE. Microchip disclaims all liability arising from this information and its use. Use of Microchip devices in life support and/or safety applications is entirely at the buyer's risk, and the buyer agrees to defend, indemnify and hold harmless Microchip from any and all damages, claims, suits, or expenses resulting from such use. No licenses are conveyed, implicitly or otherwise, under any Microchip intellectual property rights.

QUALITY MANAGEMENT SYSTEM
CERTIFIED BY DNV
= ISO/TS 16949 =

Trademarks

The Microchip name and logo, the Microchip logo, dsPIC, FlashFlex, flexPWR, JukeBlox, KEELOQ, KEELOQ logo, Kleer, LANCheck, MediaLB, MOST, MOST logo, MPLAB, OptoLyzer, PIC, PICSTART, PIC32 logo, RightTouch, SpyNIC, SST, SST Logo, SuperFlash and UNI/O are registered trademarks of Microchip Technology Incorporated in the U.S.A. and other countries.

The Embedded Control Solutions Company and mTouch are registered trademarks of Microchip Technology Incorporated in the U.S.A.

Analog-for-the-Digital Age, BodyCom, chipKIT, chipKIT logo, CodeGuard, dsPICDEM, dsPICDEM.net, ECAN, In-Circuit Serial Programming, ICSP, Inter-Chip Connectivity, KleerNet, KleerNet logo, MiWi, MPASM, MPF, MPLAB Certified logo, MPLIB, MPLINK, MultiTRAK, NetDetach, Omniscient Code Generation, PICDEM, PICDEM.net, PICkit, PICtail, RightTouch logo, REAL ICE, SQI, Serial Quad I/O, Total Endurance, TSHARC, USBCheck, VariSense, ViewSpan, WiperLock, Wireless DNA, and ZENA are trademarks of Microchip Technology Incorporated in the U.S.A. and other countries.

SQTP is a service mark of Microchip Technology Incorporated in the U.S.A.

Silicon Storage Technology is a registered trademark of Microchip Technology Inc. in other countries.

GestIC is a registered trademarks of Microchip Technology Germany II GmbH & Co. KG, a subsidiary of Microchip Technology Inc., in other countries.

All other trademarks mentioned herein are property of their respective companies.

© 2013-2015, Microchip Technology Incorporated, Printed in the U.S.A., All Rights Reserved.

ISBN: 978-1-63277-365-4

Microchip received ISO/TS-16949:2009 certification for its worldwide headquarters, design and wafer fabrication facilities in Chandler and Tempe, Arizona; Gresham, Oregon and design centers in California and India. The Company's quality system processes and procedures are for its PIC® MCUs and dsPIC® DSCs, KEELOQ® code hopping devices, Serial EEPROMs, microperipherals, nonvolatile memory and analog products. In addition, Microchip's quality system for the design and manufacture of development systems is ISO 9001:2000 certified.

Worldwide Sales and Service

AMERICAS

Corporate Office
2355 West Chandler Blvd.
Chandler, AZ 85224-6199
Tel: 480-792-7200
Fax: 480-792-7277
Technical Support:
http://www.microchip.com/support
Web Address:
www.microchip.com

Atlanta
Duluth, GA
Tel: 678-957-9614
Fax: 678-957-1455

Austin, TX
Tel: 512-257-3370

Boston
Westborough, MA
Tel: 774-760-0087
Fax: 774-760-0088

Chicago
Itasca, IL
Tel: 630-285-0071
Fax: 630-285-0075

Cleveland
Independence, OH
Tel: 216-447-0464
Fax: 216-447-0643

Dallas
Addison, TX
Tel: 972-818-7423
Fax: 972-818-2924

Detroit
Novi, MI
Tel: 248-848-4000

Houston, TX
Tel: 281-894-5983

Indianapolis
Noblesville, IN
Tel: 317-773-8323
Fax: 317-773-5453

Los Angeles
Mission Viejo, CA
Tel: 949-462-9523
Fax: 949-462-9608

New York, NY
Tel: 631-435-6000

San Jose, CA
Tel: 408-735-9110

Canada - Toronto
Tel: 905-673-0699
Fax: 905-673-6509

ASIA/PACIFIC

Asia Pacific Office
Suites 3707-14, 37th Floor
Tower 6, The Gateway
Harbour City, Kowloon
Hong Kong
Tel: 852-2943-5100
Fax: 852-2401-3431

Australia - Sydney
Tel: 61-2-9868-6733
Fax: 61-2-9868-6755

China - Beijing
Tel: 86-10-8569-7000
Fax: 86-10-8528-2104

China - Chengdu
Tel: 86-28-8665-5511
Fax: 86-28-8665-7889

China - Chongqing
Tel: 86-23-8980-9588
Fax: 86-23-8980-9500

China - Dongguan
Tel: 86-769-8702-9880

China - Hangzhou
Tel: 86-571-8792-8115
Fax: 86-571-8792-8116

China - Hong Kong SAR
Tel: 852-2943-5100
Fax: 852-2401-3431

China - Nanjing
Tel: 86-25-8473-2460
Fax: 86-25-8473-2470

China - Qingdao
Tel: 86-532-8502-7355
Fax: 86-532-8502-7205

China - Shanghai
Tel: 86-21-5407-5533
Fax: 86-21-5407-5066

China - Shenyang
Tel: 86-24-2334-2829
Fax: 86-24-2334-2393

China - Shenzhen
Tel: 86-755-8864-2200
Fax: 86-755-8203-1760

China - Wuhan
Tel: 86-27-5980-5300
Fax: 86-27-5980-5118

China - Xian
Tel: 86-29-8833-7252
Fax: 86-29-8833-7256

ASIA/PACIFIC

China - Xiamen
Tel: 86-592-2388138
Fax: 86-592-2388130

China - Zhuhai
Tel: 86-756-3210040
Fax: 86-756-3210049

India - Bangalore
Tel: 91-80-3090-4444
Fax: 91-80-3090-4123

India - New Delhi
Tel: 91-11-4160-8631
Fax: 91-11-4160-8632

India - Pune
Tel: 91-20-3019-1500

Japan - Osaka
Tel: 81-6-6152-7160
Fax: 81-6-6152-9310

Japan - Tokyo
Tel: 81-3-6880- 3770
Fax: 81-3-6880-3771

Korea - Daegu
Tel: 82-53-744-4301
Fax: 82-53-744-4302

Korea - Seoul
Tel: 82-2-554-7200
Fax: 82-2-558-5932 or
82-2-558-5934

Malaysia - Kuala Lumpur
Tel: 60-3-6201-9857
Fax: 60-3-6201-9859

Malaysia - Penang
Tel: 60-4-227-8870
Fax: 60-4-227-4068

Philippines - Manila
Tel: 63-2-634-9065
Fax: 63-2-634-9069

Singapore
Tel: 65-6334-8870
Fax: 65-6334-8850

Taiwan - Hsin Chu
Tel: 886-3-5778-366
Fax: 886-3-5770-955

Taiwan - Kaohsiung
Tel: 886-7-213-7828

Taiwan - Taipei
Tel: 886-2-2508-8600
Fax: 886-2-2508-0102

Thailand - Bangkok
Tel: 66-2-694-1351
Fax: 66-2-694-1350

EUROPE

Austria - Wels
Tel: 43-7242-2244-39
Fax: 43-7242-2244-393

Denmark - Copenhagen
Tel: 45-4450-2828
Fax: 45-4485-2829

France - Paris
Tel: 33-1-69-53-63-20
Fax: 33-1-69-30-90-79

Germany - Dusseldorf
Tel: 49-2129-3766400

Germany - Munich
Tel: 49-89-627-144-0
Fax: 49-89-627-144-44

Germany - Pforzheim
Tel: 49-7231-424750

Italy - Milan
Tel: 39-0331-742611
Fax: 39-0331-466781

Italy - Venice
Tel: 39-049-7625286

Netherlands - Drunen
Tel: 31-416-690399
Fax: 31-416-690340

Poland - Warsaw
Tel: 48-22-3325737

Spain - Madrid
Tel: 34-91-708-08-90
Fax: 34-91-708-08-91

Sweden - Stockholm
Tel: 46-8-5090-4654

UK - Wokingham
Tel: 44-118-921-5800
Fax: 44-118-921-5820

01/27/15

© 2013-2015 Microchip Technology Inc.

Общество с ограниченной ответственностью «МосЧип» ИНН 7719860671 / КПП 771901001
Адрес: 105318, г.Москва, ул.Щербаковская д.3, офис 1107

Данный компонент на территории Российской Федерации

Вы можете приобрести в компании MosChip.

Для оперативного оформления запроса Вам необходимо перейти по данной ссылке:

http://moschip.ru/get-element

Вы можете разместить у нас заказ для любого Вашего проекта, будь то серийное производство или разработка единичного прибора.

В нашем ассортименте представлены ведущие мировые производители активных и пассивных электронных компонентов.

Нашей специализацией является поставка электронной компонентной базы двойного назначения, продукции таких производителей как XILINX, Intel (ex.ALTERA), Vicor, Microchip, Texas Instruments, Analog Devices, Mini-Circuits, Amphenol, Glenair.

Сотрудничество с глобальными дистрибьюторами электронных компонентов, предоставляет возможность заказывать и получать с международных складов практически любой перечень компонентов в оптимальные для Вас сроки.

На всех этапах разработки и производства наши партнеры могут получить квалифицированную поддержку опытных инженеров.

Система менеджмента качества компании отвечает требованиям в соответствии с ГОСТ Р ИСО 9001, ГОСТ РВ 0015-002 и ЭС РД 009

Офис по работе с юридическими лицами:

105318, г.Москва, ул.Щербаковская д.3, офис 1107, 1118, ДЦ «Щербаковский»

Телефон: +7 495 668-12-70 (многоканальный)

Факс: +7 495 668-12-70 (доб.304)

E-mail: info@moschip.ru

Skype отдела продаж:
moschip.ru
moschip.ru_4
moschip.ru_6
moschip.ru_9