19-3959; Rev 2; 5/06

Quad SPST CMOS Analog Switches

General Description

The DG201A and DG211 are normally closed, quad single-pole single-throw (SPST) analog switches. These CMOS switches can be continuously operated with power supplies ranging from ±4.5V to ±18V. Maxim guarantees that these switches will not latch up if the power supplies are disconnected with input signals still connected.

Both devices have guaranteed break-before-make switching. The DG201A differs from the DG211 primarily in switching speeds. The DG201A has a maximum turn-off time of 450ns and a maximum turn-on time of 600ns. The DG211 has a maximum turn-off time of 500ns and a maximum turn-on time of 1000ns.

Compared to the original manufacturer's products, Maxim's DG201A and DG211 consume significantly lower power making them better suited for portable applications. Maxim has also eliminated the need for the third (V_L) power supply that is required for the operation of the original manufacturer's DG211.

Applications

Winchester Disk Drives

Test Equipment

Communications Systems

PBX, PABX

Guidance and Control Systems

Head Up Displays

Military Radios

Pin Configurations continued at end of data sheet.

Typical Operating Circuit

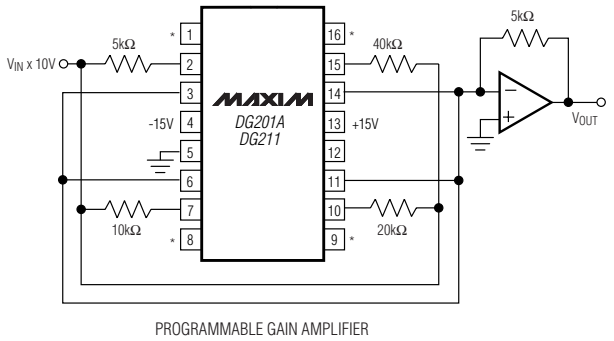

NOTE: *PINS 1, 8, 9, AND 16 ARE LOGIC CONTROL INPUTS

Features

- ♦ **Guaranteed ±4.5V to ±18V Operation**
- ♦ **No V_L Supply Required**
- ♦ **Nonlatching with Supplies Turned Off and Input Signals Present**
- ♦ **CMOS and TTL Logic Compatible**
- ♦ **Monolithic, Low-Power CMOS Design**

Ordering Information

PART	TEMP RANGE	PIN-PACKAGE
DG201ACUE	0°C to +70°C	16 TSSOP
DG201ACSE	0°C to +70°C	16 SO
DG201ACJ	0°C to +70°C	16 Plastic DIP
DG201C/D	0°C to +70°C	Dice
DG201AEGE	-40°C to +85°C	16 QFN (5 × 5)
DG201AEUE	-40°C to +85°C	16 TSSOP
DG201ADY	-40°C to +85°C	16 SO
DG201ADJ	-40°C to +85°C	16 Plastic DIP
DG201AAK	-55°C to +125°C	16 CERDIP
DG201ABK	-25°C to +85°C	16 CERDIP
DG211CUE	0°C to +70°C	16 TSSOP
DG211CSE	0°C to +70°C	16 SO
DG211CJ	0°C to +70°C	16 Plastic DIP
DG211C/D	0°C to +70°C	Dice
DG211EGE	-40°C to +85°C	16 QFN (5 × 5)
DG211EUE	-40°C to +85°C	16 TSSOP
DG211DY	-40°C to +85°C	16 SO
DG211DJ	-40°C to +85°C	16 Plastic DIP

Pin Configurations

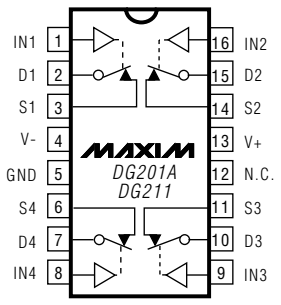

LOGIC	SWITCH
0	ON
1	OFF

For pricing, delivery, and ordering information, please contact Maxim/Dallas Direct! at 1-888-629-4642, or visit Maxim's website at www.maxim-ic.com.

Quad SPST CMOS Analog Switches

ABSOLUTE MAXIMUM RATINGS (DG211)

V+ to V-……44V
V_{IN} to Ground……V-, V+
V_L to Ground……-0.3V, 25V
V_S or V_D to V+……0, -40V
V_S or V_D to V-……0, 40V
V+ to Ground……25V
V- to Ground……-25V
Current, Any Terminal Except S or D……30mA
Continuous Current, S or D……20mA
Peak Current, S or D
(pulsed at 1ms 10% duty cycle max)……70mA

Storage Temperature Range……-65°C to +125°C
Operating Temperature Range
DG211C……0°C to +70°C
DG211D/E……-40°C to +85°C
Power Dissipation (T_A = +70°C) (Note 1)
16-Pin Plastic Dip (derate 10.5mW/°C above +70°C) ..842mW
16-Pin Narrow SO (derate 8.3mW/°C above+70°C). 696mW
16-Pin TSSOP (derate 9.4mW/°C above +70°C) 755mW
16-Pin QFN (5 × 5)
(derate 19.2mW/°C above +70°C).....1538mW

Note 1: Device mounted with all leads soldered to PC board.

Stresses beyond those listed under "Absolute Maximum Ratings" may cause permanent damage to the device. These are stress ratings only, and functional operation of the device at these or any other conditions beyond those indicated in the operational sections of the specifications is not implied. Exposure to absolute maximum rating conditions for extended periods may affect device reliability.

ELECTRICAL CHARACTERISTICS (DG211)

(V+ = +15V, V- = -15V, GND = 0, T_A = +25°C, unless otherwise noted.) (For more information on TYP values see Note 2.)

PARAMETER	SYMBOL	CONDITIONS		MIN	TYP	MAX	UNITS
SWITCH							
Analog Signal Range	V_{ANALOG}			-15		15	V
Drain-Source ON-Resistance	$R_{DS\ (ON)}$	V_D = ±10V, V_{IN} = 0.8V, I_S = 1mA			115	175	Ω
Source OFF-Leakage Current	$I_{S\ (OFF)}$	V_{IN} = 2.4V	V_S = 14V, V_D = -14V		0.01	5.0	nA
			V_S = -14V, V_D = 14V	-5.0	-0.02		
Drain OFF-Leakage Current	$I_{D\ (OFF)}$	V_{IN} = 2.4V	V_S = 14V, V_D = -14V		0.01	5.0	
			V_S = -14V, V_D = 14V	-5.0	-0.02		
Drain ON-Leakage Current (Note 3)	$I_{D\ (ON)}$	V_{IN} = 0.8V	V_S = V_D = -14V		0.1	5.0	
			V_S = V_D = -14V	-5.0	-0.15		
INPUT							
Input Current with Input Voltage High	I_{INH}	V_{IN} = 2.4V		-1.0	-0.0004		μA
		V_{IN} = 15V			0.003	1.0	
Input Current with Input Voltage Low	I_{INL}	V_{IN} = 0		-1.0	-0.0004		
DYNAMIC							
Turn-ON Time	t_{ON}	See Switching Time Test Circuit V_S = 2V, R_L = 1kΩ, C_L = 35pF			460	1000	ns
Turn-OFF Time	t_{OFF1}				360	500	
	t_{OFF2}				450		
Source OFF-Capacitance	$C_{S\ (OFF)}$	V_S = 0, V_{IN} = 5V, f = 1MHz			5		pF
Drain OFF-Capacitance	$C_{D\ (OFF)}$	V_D = 0, V_{IN} = 5V, f = 1MHz			5		
Channel ON-Capacitance	$C_{D+S\ (ON)}$	V_D = V_S = 0, V_{IN} = 0, f = 1MHz			16		
OFF-Isolation (Note 4)	OIRR	V_{IN} = 5V, R_L = 1kΩ, C_L = 15pF, V_S = 1VRMS, f = 100kHz			70		dB
Crosstalk (Channel to Channel)	CCRR				90		

ELECTRICAL CHARACTERISTICS (DG211) (continued)

(V+ = +15V, V- = -15V, GND = 0, T_A = +25°C, unless otherwise noted.) (For more information on TYP values see Note 2.)

PARAMETER	SYMBOL	CONDITIONS	MIN	TYP	MAX	UNITS
SUPPLY						
Positive Supply Current	I^+	V_{IN} = 0 and 2.4V (all)		0.02	0.4	mA
Negative Supply Current	I^-			0.01	0.4	
Logic Supply Current	I_L			0	0	
Power-Supply Range for Continous Operation	V_{OP}		±4.5		±18	V

Note 2: Typical values are for DESIGN AID ONLY, not guaranteed nor subject to production testing.
Note 3: $I_{D(ON)}$ is leakage from driver into "ON" switch.
Note 4: OFF-Isolation = 20 log V_S/V_D, V_S = input to OFF switch, V_D = output.

ABSOLUTE MAXIMUM RATINGS (DG201A)

Voltages Reference to V-
V+……44V
GND……25V
Digital Inputs (Note 1), V_S, V_D .....-2V to (V+ + 2V) or 20mA, whichever occurs first
Current, Any Terminal Except S or D……30mA
Continuous Current, S or D……20mA
Peak Current, S or D
(pulsed at 1ms 10% duty cycle max)……70mA

Operating Temperature Range
DG201AA .....-55°C to +125°C
DG201AD/E .....-40°C to +85°C
DG201AC .....0°C to +70°C
Storage Temperature Range……-65°C to +150°C
Power Dissipation (Note 2)
16-Pin Plastic Dip (derate 10.5mW/°C above +70°C) ...842mW
16-Pin SO (derate 8.7mW/°C above +70°C) 696mW
16-Pin TSSOP (derate 9.4mW/°C above +70°C).....755mW
16-Pin QFN (5 × 5)
(derate 19.2mW/°C above +70°C).....1538mW
16-Pin CERDIP (derate 10.0mW/°C above +70°C).....800mW

Note 1: Signals on S_, D_, or IN_ exceeding V^+ or V^- on Maxim's DG201A will be clamped by internal diodes, and are also internally current limited to 25mA.
Note 2: Device mounted with all leads soldered to PC board.

Stresses beyond those listed under "Absolute Maximum Ratings" may cause permanent damage to the device. These are stress ratings only, and functional operation of the device at these or any other conditions beyond those indicated in the operational sections of the specifications is not implied. Exposure to absolute maximum rating conditions for extended periods may affect device reliability.

ELECTRICAL CHARACTERISTICS (DG201A)

(V+ = +15V, V- = -15V, GND = 0, **T_A = +25°C**, unless otherwise noted.) (For more information on TYP values see Note 3.)

PARAMETER	SYMBOL	CONDITIONS		DG201AA			DG201AC, D, E			UNITS
				MIN	TYP	MAX	MIN	TYP	MAX	
SWITCH										
Analog Signal Range	V_{ANALOG}			-15		15	-15		15	V
Drain-Source ON Resistance	$R_{DS\ (ON)}$	V_D = ±10V, V_{IN} = 0.8V, I_S = 1mA			115	175		115	200	Ω
Source OFF-Leakage Current	$I_{S\ (OFF)}$	V_{IN} = 2.4V	V_S = 14V, V_D = -14V		0.01	1.0		0.01	5.0	nA
			V_S = -14V, V_D = 14V	-1.0	-0.02		-5.0	-0.02		
Drain OFF-Leakage Current	$I_{D\ (OFF)}$	V_{IN} = 2.4V	V_S = 14V, V_D = -14V		0.01	1.0		0.01	5.0	
			V_S = -14V, V_D = 14V	-1.0	-0.02		-5.0	-0.02		
Drain ON-Leakage Current (Note 4)	$I_{D\ (ON)}$	V_{IN} = 0.8V	V_S = -14V		0.1	1.0		0.1	1.0	
			V_S = 14V	-1.0			-1.0			

ELECTRICAL CHARACTERISTICS (DG201A) (continued)

(V+ = +15V, V- = -15V, GND = 0, **T_A = +25°C**, unless otherwise noted.) (For more information on TYP values see Note 3.)

PARAMETER	SYMBOL	CONDITIONS	DG201AA			DG201AC, D, E			UNITS
			MIN	TYP	MAX	MIN	TYP	MAX	
INPUT									
Input Current with Input Voltage High	I_{INH}	V_{IN} = 2.4V	-1.0			-1.0			µA
		V_{IN} = 15V			1.0			1.0	
Input Current with Input Voltage Low	I_{INL}	V_{IN} = 0+	-1.0			-1.0			
DYNAMIC									
Turn-ON Time	t_{ON}	See Figure 1 Switching Time Test Circuit		480	600		480	600	ns
Turn-OFF Time	t_{OFF1}			370	450		370	450	
Charge Injection	Q	C_L = 1000pF, V_{GEN} = 0, R_{GEN} = 0		20			20		pC
Source OFF-Capacitance	$C_{S\ (OFF)}$	V_S = 0, V_{IN} = 5V, f = 140kHz		5			5		pF
Drain OFF-Capacitance	$C_{D\ (OFF)}$			5			5		
Channel ON-Capacitance	$C_{D\ (ON)}$ + $C_{S\ (ON)}$	V_D = V_S = 0, V_{IN} = 0, f = 140kHz		16			16		
OFF-Isolation		V_{IN} = 5V, Z_L = 75Ω		70			70		dB
Crosstalk (Channel to Channel)		V_S = 2.0V, f = 100kHz		90			90		
SUPPLY									
Positive Supply Current	I^+	All channels ON or OFF		0.02	0.1		0.02	0.1	mA
Negative Supply Current	I^-	All channels ON or OFF	-0.1	-0.01		-0.1	-0.01		
Power-Supply Range for Continuous Operation	V_{OP}		±4.5		±18	±4.5		±18	V

Note 3: Typical values are for DESIGN AID ONLY, not guaranteed nor subject to production testing.
Note 4: $I_{D\ (ON)}$ is leakage from driver into "ON" switch.

ELECTRICAL CHARACTERISTICS (DG201A)

(V+ = +15V, V- = -15V, GND = 0, **T_A = full opearting temperature range**, unless otherwise noted.) (For more information on TYP values see Note 3.)

PARAMETER	SYMBOL	CONDITIONS		DG201AA			DG201AC, D, E			UNITS
				MIN	TYP	MAX	MIN	TYP	MAX	
SWITCH										
Analog Signal Range	V_{ANALOG}			-15		15	-15		15	V
Drain-Source ON Resistance (Note 5)	$R_{DS\ (ON)}$	V_D = ±10V, V_{IN} = 0.8V, I_S = 1mA				250			250	Ω
Source OFF Leakage Current	$I_{S\ (OFF)}$	V_{IN} = 2.4V	V_S = 14V, V_D = -14V			100			100	nA
			V_S = -14V, V_D = 14V	-100			-100			
Drain OFF Leakage Current	$I_{D\ (OFF)}$	V_{IN} = 2.4V	V_S = 14V, V_D = -14V			100			100	
			V_S = -14V, V_D = 14V	-100			-100			
Drain ON Leakage Current (Note 6)	$I_{D\ (ON)}$	V_{IN} = 0.8V	V_S = -14V			200			200	
			V_D = 14V	-200			-200			
INPUT										
Input Current with Input Voltage High	I_{INH}	V_{IN} = 2.4V		-1.0			-1.0			μA
		V_{IN} = 15V				1.0			1.0	
Input Current with Input Voltage Low	I_{INL}	V_{IN} = 0		-1.0			-1.0			

Note 5: Electrical characteristics, such as ON-Resistance, will change when power supplies other than ±15V, are used.
Note 6: $I_{D\ (ON)}$ is leakage from driver into "ON" switch.

Pin Description

PIN		NAME	FUNCTION
DIP/SO/TSSOP	QFN		
1, 16, 9, 8	15, 14, 7, 6	IN1–IN4	Input
2, 15, 10, 7	16, 13, 8, 5	D1–D4	Analog Switch Drain Terminal
3, 14, 11, 6	1, 12, 9, 4	S1–S4	Analog Switch Source Terminal
4	2	V-	Negative-Supply Voltage Input
5	3	GND	Ground
12	10	N.C.	No Connection
13	11	V+	Positive-Supply Voltage Input—Connected to Substrate

Switching Time Test Circuit

Switch output waveform shown for V_S = constant with logic input waveform as shown. Note that V_S may be +ve or -ve as per switching times test circuit. V_O is the steady state output with switch on. Feedthrough via gate capacitance may result in spikes at leading and trailing edge of output waveform.

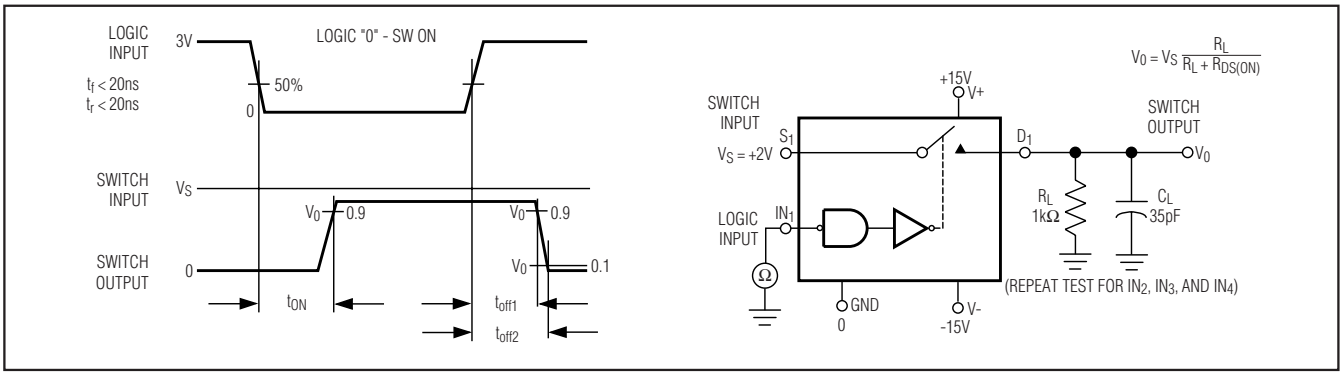

Figure 1. Switching Time

Typical $R_{DS(ON)}$ vs. Power Supplies for Maxim's DG201A, and DG211

POWER SUPPLIES	$R_{DS(ON)}$ AT ANALOG SIGNAL LEVEL					
	-5V	+5V	-10V	+10V	-15V	+15V
±5V	350Ω	380Ω	—	—	—	—
±10V	—	—	165Ω	250Ω	—	—
±15V	—	—	125Ω	160Ω	135Ω	155Ω

Protecting Against Fault Conditions

Fault conditions occur when power supplies are turned off when input signals are still present, or when overvoltages occur at the inputs during normal operation. In either case, source-to-body diodes can be forward biased and conduct current from the signal source. If this current is required to be kept to low (µA) levels then the addition of external protection diodes is recommended.

To provide protection for overvoltages up to 20V above the supplies, a 1N4001 or 1N914 type diode should be placed in series with the positive and negative supplies as shown in Figure 2. The addition of these diodes will reduce the analog signal range to 1V below the positive supply and 1V above the negative supply.

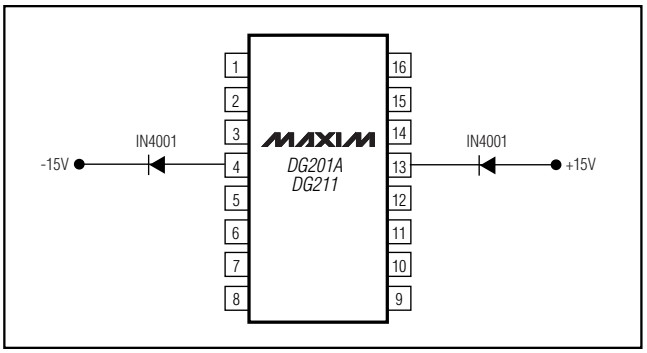

Figure 2. Protection against Fault Conditions

Pin Configurations (continued)

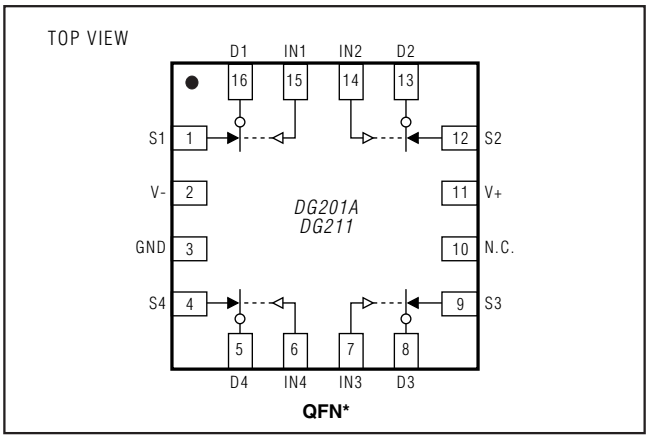

Package Information

(The package drawing(s) in this data sheet may not reflect the most current specifications. For the latest package outline information, go to **www.maxim-ic.com/packages**.)

SOICN .EPS

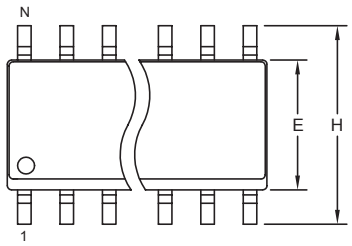

TOP VIEW

	INCHES		MILLIMETERS	
DIM	MIN	MAX	MIN	MAX
A	0.053	0.069	1.35	1.75
A1	0.004	0.010	0.10	0.25
B	0.014	0.019	0.35	0.49
C	0.007	0.010	0.19	0.25
e	0.050 BSC		1.27 BSC	
E	0.150	0.157	3.80	4.00
H	0.228	0.244	5.80	6.20
L	0.016	0.050	0.40	1.27

VARIATIONS:

	INCHES		MILLIMETERS			
DIM	MIN	MAX	MIN	MAX	N	MS012
D	0.189	0.197	4.80	5.00	8	AA
D	0.337	0.344	8.55	8.75	14	AB
D	0.386	0.394	9.80	10.00	16	AC

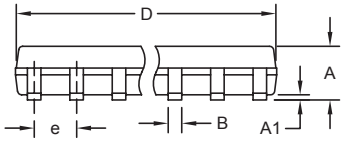

FRONT VIEW

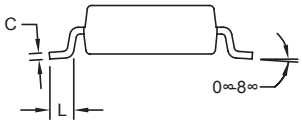

SIDE VIEW

NOTES:
1. D&E DO NOT INCLUDE MOLD FLASH.
2. MOLD FLASH OR PROTRUSIONS NOT TO EXCEED 0.15mm (.006").
3. LEADS TO BE COPLANAR WITHIN 0.10mm (.004").
4. CONTROLLING DIMENSION: MILLIMETERS.
5. MEETS JEDEC MS012.
6. N = NUMBER OF PINS.

DALLAS SEMICONDUCTOR MAXIM

PROPRIETARY INFORMATION

TITLE: PACKAGE OUTLINE, .150" SOIC

APPROVAL	DOCUMENT CONTROL NO.	REV.	
	21-0041	B	1/1

Package Information (continued)

(The package drawing(s) in this data sheet may not reflect the most current specifications. For the latest package outline information, go to **www.maxim-ic.com/packages**.)

PDIPN.EPS

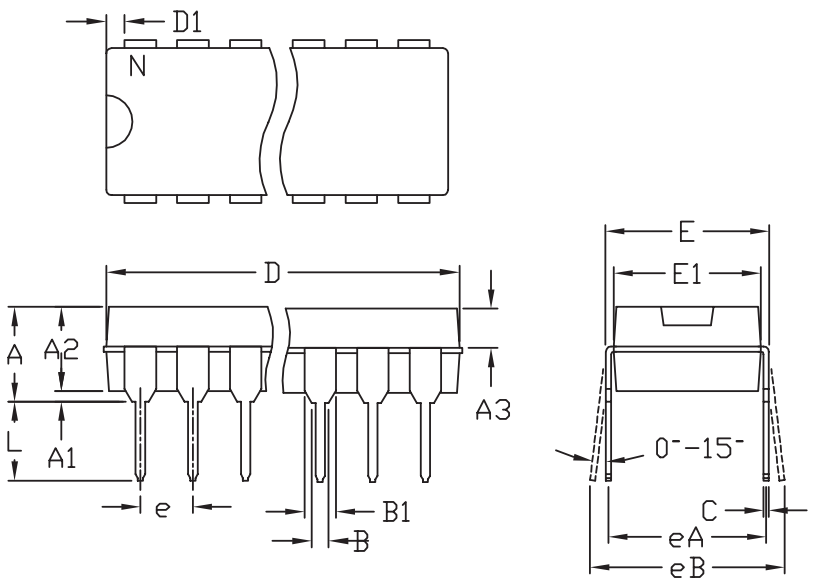

	INCHES		MILLIMETERS	
	MIN	MAX	MIN	MAX
A	---	0.180	---	4.572
A1	0.015	---	0.38	---
A2	0.125	0.175	3.18	4.45
A3	0.055	0.080	1.40	2.03
B	0.015	0.022	0.381	0.56
B1	0.045	0.065	1.14	1.65
C	0.008	0.014	0.2	0.355
D1	0.005	0.080	0.13	2.03
E	0.300	0.325	7.62	8.26
E1	0.240	0.310	6.10	7.87
e	0.100 BSC.		2.54 BSC.	
eA	0.300 BSC.		7.62 BSC.	
eB	0.400 BSC.		10.16 BSC.	
L	0.115	0.150	2.921	3.81

	INCHES		MILLIMETERS			
	MIN	MAX	MIN	MAX	N	MS001
D	0.348	0.390	8.84	9.91	8	AB
D	0.735	0.765	18.67	19.43	14	AC
D	0.745	0.765	18.92	19.43	16	AA
D	0.885	0.915	22.48	23.24	18	AD
D	1.015	1.045	25.78	26.54	20	AE
D	1.14	1.265	28.96	32.13	24	AF
D	1.360	1.380	34.54	35.05	28	*5

NOTES:
1. D&E DO NOT INCLUDE MOLD FLASH
2. MOLD FLASH OR PROTRUSIONS NOT TO EXCEED .15mm (.006")
3. CONTROLLING DIMENSION: MILLIMETER
4. MEETS JEDEC MS001-XX AS SHOWN IN ABOVE TABLE
5. SIMILIAR TO JEDEC MO-058AB
6. N = NUMBER OF PINS

MAXIM 120 SAN GABRIEL DR SUNNYVALE CA 94086 FAX (408) 737 7194
PROPRIETARY INFORMATION

TITLE: PACKAGE FAMILY OUTLINE: PDIP .300"

1/1

DOCUMENT CONTROL NUMBER: 21-0043 D REV

Package Information (continued)

(The package drawing(s) in this data sheet may not reflect the most current specifications. For the latest package outline information, go to **www.maxim-ic.com/packages**.)

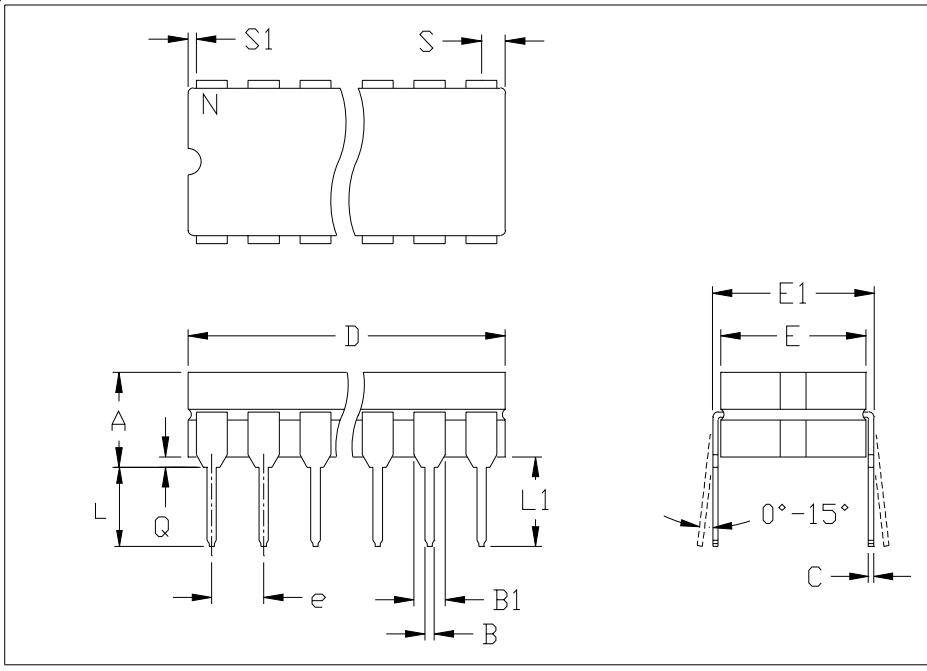

	INCHES		MILLIMETERS	
	MIN	MAX	MIN	MAX
A	---	0.200	---	5.08
B	0.014	0.023	0.36	0.58
B1	0.038	0.065	0.97	1.65
C	0.008	0.015	0.20	0.38
E	0.220	0.310	5.59	7.87
E1	0.290	0.320	7.37	8.13
e	0.100		2.54	
L	0.125	0.200	3.18	5.08
L1	0.150	---	0.00	---
Q	0.015	0.070	0.38	1.78
S	---	0.098	---	2.49
S1	0.005	---	0.13	---

	INCHES		MILLIMETERS			
	MIN	MAX	MIN	MAX	N	CASE
D	---	0.405	---	10.29	8	P:D4
D	---	0.785	---	19.94	14	C:D1
D	---	0.840	---	21.34	16	E:D2
D	---	0.960	---	24.38	18	V:D6
D	---	1.060	---	26.92	20	R:D8
D	---	1.280	---	32.51	24	L:D9

NOTES:
1. CONTROLLING DIMENSION: INCH
2. MEETS 1835 CASE OUTLINE CONFIGURATION #1 AS SHOWN IN ABOVE TABLE
3. N = NUMBER OF PINS

MAXIM 120 SAN GABRIEL DR SUNNYVALE CA 94086 FAX (408) 737 7194 PROPRIETARY INFORMATION | PACKAGE FAMILY OUTLINE: CDIP .300" (TITLE) | 1/1 | 21-0045 A (DOCUMENT CONTROL NUMBER REV)

Package Information (continued)

(The package drawing(s) in this data sheet may not reflect the most current specifications. For the latest package outline information, go to **www.maxim-ic.com/packages**.)

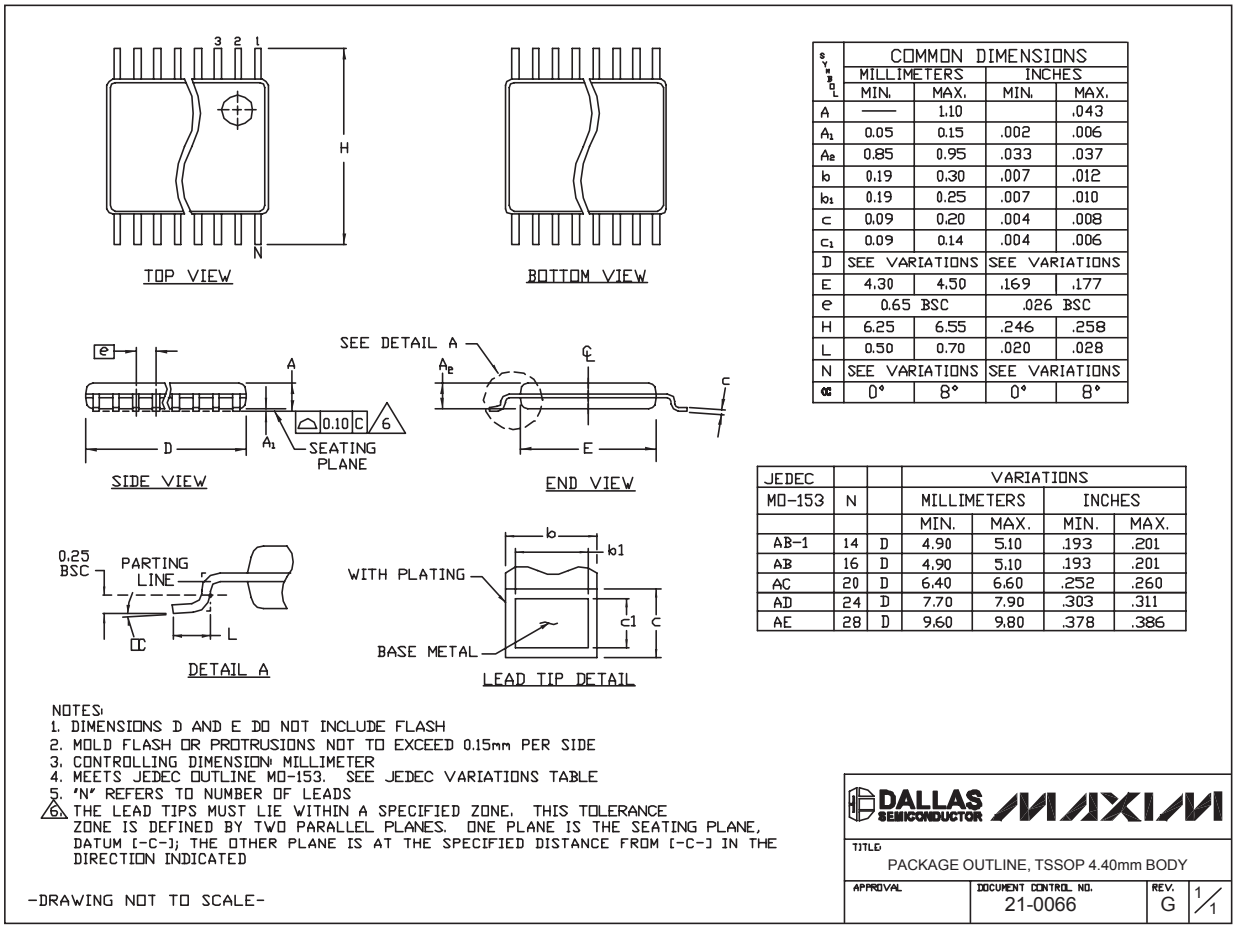

SYMBOL	COMMON DIMENSIONS			
	MILLIMETERS		INCHES	
	MIN.	MAX.	MIN.	MAX.
A	——	1.10		.043
A_1	0.05	0.15	.002	.006
A_2	0.85	0.95	.033	.037
b	0.19	0.30	.007	.012
b_1	0.19	0.25	.007	.010
c	0.09	0.20	.004	.008
c_1	0.09	0.14	.004	.006
D	SEE VARIATIONS		SEE VARIATIONS	
E	4.30	4.50	.169	.177
e	0.65 BSC		.026 BSC	
H	6.25	6.55	.246	.258
L	0.50	0.70	.020	.028
N	SEE VARIATIONS		SEE VARIATIONS	
α	0°	8°	0°	8°

JEDEC			VARIATIONS			
MO-153	N		MILLIMETERS		INCHES	
			MIN.	MAX.	MIN.	MAX.
AB-1	14	D	4.90	5.10	.193	.201
AB	16	D	4.90	5.10	.193	.201
AC	20	D	6.40	6.60	.252	.260
AD	24	D	7.70	7.90	.303	.311
AE	28	D	9.60	9.80	.378	.386

Package Information (continued)

(The package drawing(s) in this data sheet may not reflect the most current specifications. For the latest package outline information, go to **www.maxim-ic.com/packages**.)

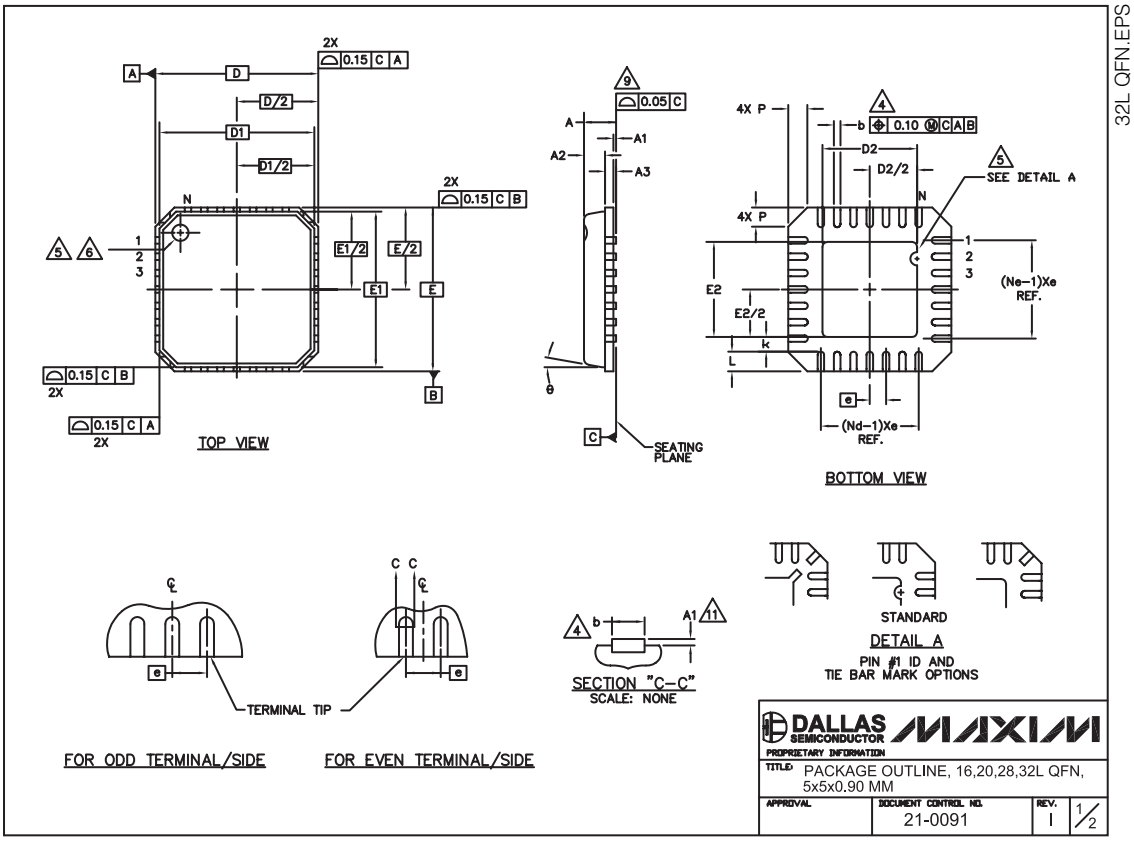

Package Information (continued)

(The package drawing(s) in this data sheet may not reflect the most current specifications. For the latest package outline information, go to **www.maxim-ic.com/packages**.)

COMMON DIMENSIONS												
PKG	16L 5x5			20L 5x5			28L 5x5			32L 5x5		
SYMBOL	MIN.	NOM.	MAX.	MIN.	NOM.	MAX.	MIN.	NOM.	MAX.	MIN.	NOM.	MAX.
A	0.80	0.90	1.00	0.80	0.90	1.00	0.80	0.90	1.00	0.80	0.90	1.00
A1	0.00	0.01	0.05	0.00	0.01	0.05	0.00	0.01	0.05	0.00	0.01	0.05
A2	0.00	0.65	1.00	0.00	0.65	1.00	0.00	0.65	1.00	0.00	0.65	1.00
A3	0.20 REF			0.20 REF			0.20 REF			0.20 REF		
b	0.28	0.33	0.40	0.23	0.28	0.35	0.18	0.23	0.30	0.18	0.23	0.30
D	4.90	5.00	5.10	4.90	5.00	5.10	4.90	5.00	5.10	4.90	5.00	5.10
D1	4.75 BSC			4.75 BSC			4.75 BSC			4.75 BSC		
E	4.90	5.00	5.10	4.90	5.00	5.10	4.90	5.00	5.10	4.90	5.00	5.10
E1	4.75 BSC			4.75 BSC			4.75 BSC			4.75 BSC		
e	0.80 BSC			0.65 BSC			0.50 BSC			0.50 BSC		
k	0.25	–	–	0.25	–	–	0.25	–	–	0.25	–	–
L	0.35	0.55	0.75	0.35	0.55	0.75	0.35	0.55	0.75	0.30	0.40	0.50
N	16			20			28			32		
ND	4			5			7			8		
NE	4			5			7			8		
P	0.00	0.42	0.60	0.00	0.42	0.60	0.00	0.42	0.60	0.00	0.42	0.60
θ	0°		12°	0°		12°	0°		12°	0°		12°

EXPOSED PAD VARIATIONS						
PKG. CODES	D2			E2		
	MIN.	NOM.	MAX.	MIN.	NOM.	MAX.
G1655-3	2.95	3.10	3.25	2.95	3.10	3.25
G2055-1	2.55	2.70	2.85	2.55	2.70	2.85
G2055-2	2.95	3.10	3.25	2.95	3.10	3.25
G2855-1	2.55	2.70	2.85	2.55	2.70	2.85
G2855-2	2.95	3.10	3.25	2.95	3.10	3.25
G3255-1	2.95	3.10	3.25	2.95	3.10	3.25

NOTES:

1. DIE THICKNESS ALLOWABLE IS 0.305mm MAXIMUM (.012 INCHES MAXIMUM)
2. DIMENSIONING & TOLERANCES CONFORM TO ASME Y14.5M. – 1994.
3. N IS THE NUMBER OF TERMINALS.
   Nd IS THE NUMBER OF TERMINALS IN X–DIRECTION & Ne IS THE NUMBER OF TERMINALS IN Y–DIRECTION.
4. DIMENSION b APPLIES TO PLATED TERMINAL AND IS MEASURED BETWEEN 0.20 AND 0.25mm FROM TERMINAL TIP.
5. THE PIN #1 IDENTIFIER MUST BE EXISTED ON THE TOP SURFACE OF THE PACKAGE BY USING INDENTATION MARK OR INK/LASER MARKED. DETAILS OF PIN #1 IDENTIFIER IS OPTIONAL, BUT MUST BE LOCATED WITHIN ZONE INDICATED.
6. EXACT SHAPE AND SIZE OF THIS FEATURE IS OPTIONAL.
7. ALL DIMENSIONS ARE IN MILLIMETERS.
8. PACKAGE WARPAGE MAX 0.05mm.
9. APPLIED FOR EXPOSED PAD AND TERMINALS.
   EXCLUDE EMBEDDED PART OF EXPOSED PAD FROM MEASURING.
10. MEETS JEDEC MO220; EXCEPT DIMENSION "b".
11. APPLIED FOR EXPOSED PAD AND TERMINALS. EXCLUDE EMBEDDING PART OF EXPOSED PAD FROM MEASURING.
12. THIS PACKAGE OUTLINE APPLIES TO ANVIL SINGULATION (STEPPED SIDES).

DALLAS SEMICONDUCTOR MAXIM
PROPRIETARY INFORMATION

TITLE: PACKAGE OUTLINE, 16,20,28,32L QFN, 5x5x0.90 MM

APPROVAL	DOCUMENT CONTROL NO.	REV.	
	21-0091	I	2/2

Maxim cannot assume responsibility for use of any circuitry other than circuitry entirely embodied in a Maxim product. No circuit patent licenses are implied. Maxim reserves the right to change the circuitry and specifications without notice at any time.

© 2006 Maxim Integrated Products MAXIM is a registered trademark of Maxim Integrated Products, Inc.

Общество с ограниченной ответственностью «МосЧип» ИНН 7719860671 / КПП 771901001
Адрес: 105318, г.Москва, ул.Щербаковская д.3, офис 1107

Данный компонент на территории Российской Федерации

Вы можете приобрести в компании MosChip.

Для оперативного оформления запроса Вам необходимо перейти по данной ссылке:

http://moschip.ru/get-element

Вы можете разместить у нас заказ для любого Вашего проекта, будь то серийное производство или разработка единичного прибора.

В нашем ассортименте представлены ведущие мировые производители активных и пассивных электронных компонентов.

Нашей специализацией является поставка электронной компонентной базы двойного назначения, продукции таких производителей как XILINX, Intel (ex.ALTERA), Vicor, Microchip, Texas Instruments, Analog Devices, Mini-Circuits, Amphenol, Glenair.

Сотрудничество с глобальными дистрибьюторами электронных компонентов, предоставляет возможность заказывать и получать с международных складов практически любой перечень компонентов в оптимальные для Вас сроки.

На всех этапах разработки и производства наши партнеры могут получить квалифицированную поддержку опытных инженеров.

Система менеджмента качества компании отвечает требованиям в соответствии с ГОСТ Р ИСО 9001, ГОСТ РВ 0015-002 и ЭС РД 009

Офис по работе с юридическими лицами:

105318, г.Москва, ул.Щербаковская д.3, офис 1107, 1118, ДЦ «Щербаковский»

Телефон: +7 495 668-12-70 (многоканальный)

Факс: +7 495 668-12-70 (доб.304)

E-mail: info@moschip.ru

Skype отдела продаж:
moschip.ru
moschip.ru_4
moschip.ru_6
moschip.ru_9