- **Separate Supply Voltage Pins for Isolation of Frequency Control Inputs and Oscillators from Output Circuitry**
- **Highly Stable Operation over Specified Temperature and/or Supply Voltage Ranges**

DEVICE TYPE	SIMILAR TO	NUMBER VCO's	COMP'L Z OUT	ENABLE	RANGE INPUT	R_{ext}
'LS624	'LS324	single	yes	yes	yes	no
'LS625	'LS325	dual	yes	no	no	no
'LS626	'LS326	dual	yes	yes	no	no
'LS627	'LS327	dual	no	no	no	no
'LS628	'LS324	single	yes	yes	yes	yes
'LS629	'LS124	dual	no	yes	yes	no

description

These voltage-controlled oscillators (VCOs) are improved versions of the original VCO family: SN54LS124, SN54LS324 thru SN54LS327, SN74LS124, and SN74LS324 thru SN74LS327. These new devices feature improved voltage-to-frequency linearity, range, and compensation. With the exception of the 'LS624 and 'LS628, all of these devices feature two independent VCOs in a single monolithic chip. The 'LS624, 'LS625, 'LS626, and 'LS628 have complementary Z outputs. The output frequency for each VCO is established by a single external component (either a capacitor or crystal) in combination with voltage-sensitive inputs used for frequency control and frequency range. Each device has a voltage-sensitive input for frequency control; however, the 'LS624, 'LS628, and 'LS629 devices also have one for frequency range. (See Figures 1 thru 6).

The 'LS628 offers more precise temperature compensation than its 'LS624 counterpart. The 'LS624 features a 600 ohm internal timing resistor. The 'LS628 requires a timing resistor to be connected externally across R_{ext} pins. Temperature compensation will be improved dur to the temperature coefficient of the external resistor.

Figure 3 and Figure 6 contain the necessary information to choose the proper capacitor value to obtain the desired operating frequency.

A single 5-volt supply can be used: however, one set of supply voltage and ground pins (V_{CC} and GND) is provided for the enable, synchronization-gating, and output sections, and a separate set (OSC V_{CC} and OSC GND) is provided for the oscillator and associated frequency-control circuits so that effective isolation can be accomplished in the system. For operation of frequencies greater than 10 MHz, it is recommended that two independent supplies be used. Disabling either VCO of the 'LS625 and 'LS625 and 'LS627 can be achieved by removing the appropriate OSC V_{CC}. An enable input is provided on the 'LS624, 'LS626, 'LS628, and 'LS629. When the enable input is low, the output is enabled: when the enable input is high, the internal oscillator is disabled, Y is high, and Z is low. Caution! Crosstalk may occur in the dual devices ('LS625, 'LS626, 'LS627 and 'LS629) when both VCOs are operated simultaneously. To minimize crosstalk, either of the following are recommended: (A) If frequencies are widely separated, use a 10-μh inductor between V_{CC} pins. (B) If frequencies are closely spaced, use two separate V_{CC} supplies or place two series diodes between the V_{CC} pins.

The pulse-synchronization-gating section ensures that the first output pulse is neither clipped nor extended. The duty cycle of the square-wave output is fixed at approximately 50 percent.

The SN54LS624 thru SN54LS629 are characterized for operation over the full military temperature range of −55°C to 125°C. The SN74LS624 thru SN74LS629 are characterized for operation from 0°C to 70°C.

PRODUCTION DATA information is current as of publication date. Products conform to specifications per the terms of Texas Instruments standard warranty. Production processing does not necessarily include testing of all parameters.

Copyright © 1988, Texas Instruments Incorporated

SN54LS624 . . . J OR W PACKAGE
SN74LS624 . . . D OR N PACKAGE
(TOP VIEW)

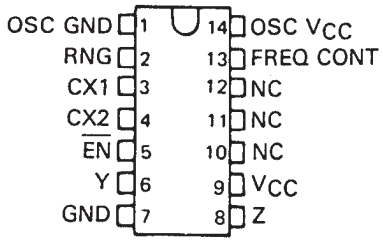

SN54LS625 . . . J OR W PACKAGE
SN74LS625 . . . D OR N PACKAGE
(TOP VIEW)

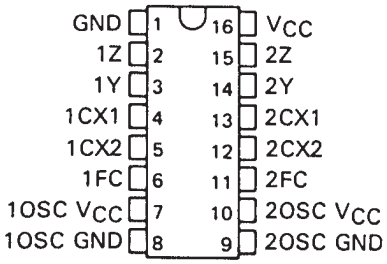

SN54LS626 . . . J OR W PACKAGE
SN74LS626 . . . D OR N PACKAGE
(TOP VIEW)

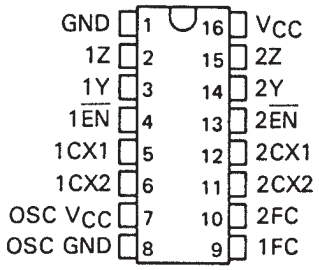

NC – No internal connection

SN54LS624 . . . FK PACKAGE
(TOP VIEW)

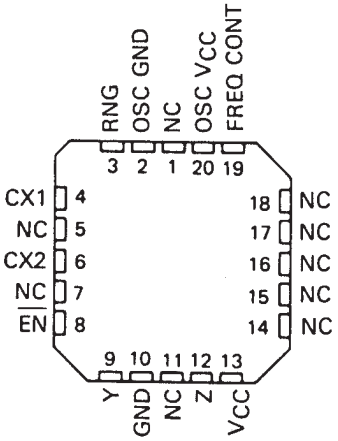

SN54LS625 . . . FK PACKAGE
(TOP VIEW)

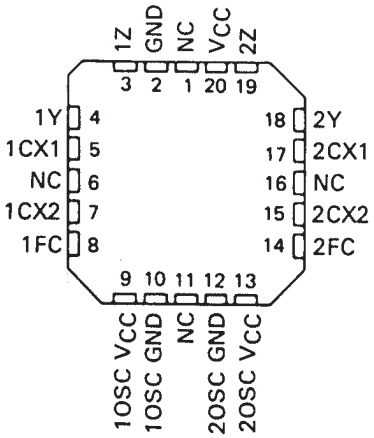

SN54LS626 . . . FK PACKAGE
(TOP VIEW)

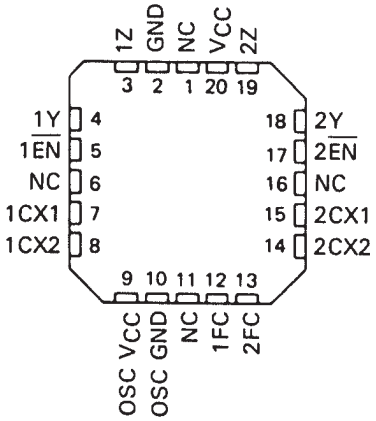

SN54LS627 . . . J OR W PACKAGE
SN74LS627 . . . D OR N PACKAGE
(TOP VIEW)

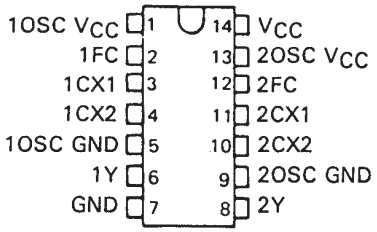

SN54LS628 . . . J OR W PACKAGE
SN74LS628 . . . D OR N PACKAGE
(TOP VIEW)

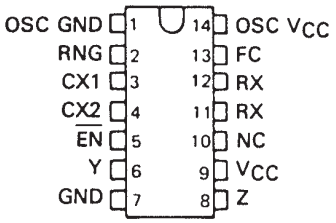

SN54LS629 . . . J OR W PACKAGE
SN74LS629 . . . D OR N PACKAGE
(TOP VIEW)

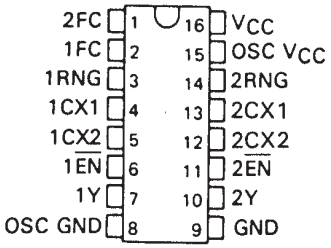

NC-No internal connection

SN54LS627 . . . FK PACKAGE
(TOP VIEW)

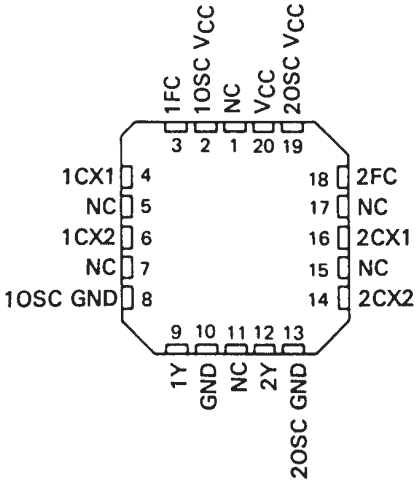

SN54LS628 . . . FK PACKAGE
(TOP VIEW)

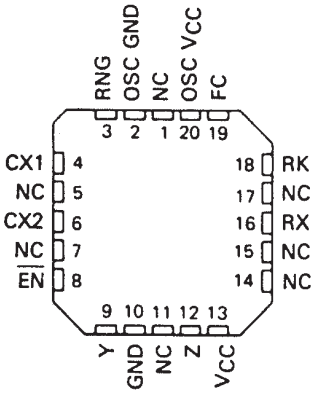

SN54LS629 . . . FK PACKAGE
(TOP VIEW)

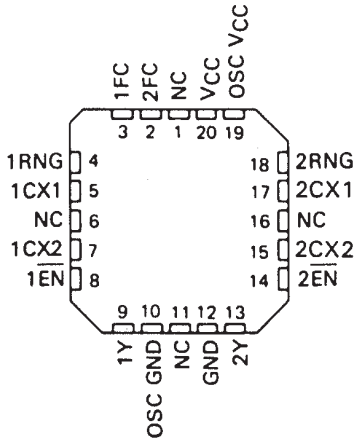

logic diagram (positive logic)

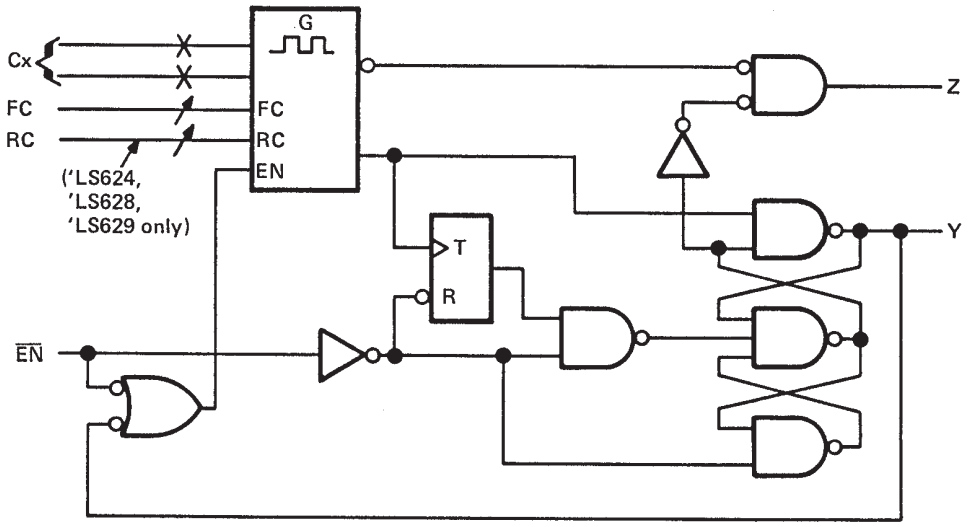

logic symbols†

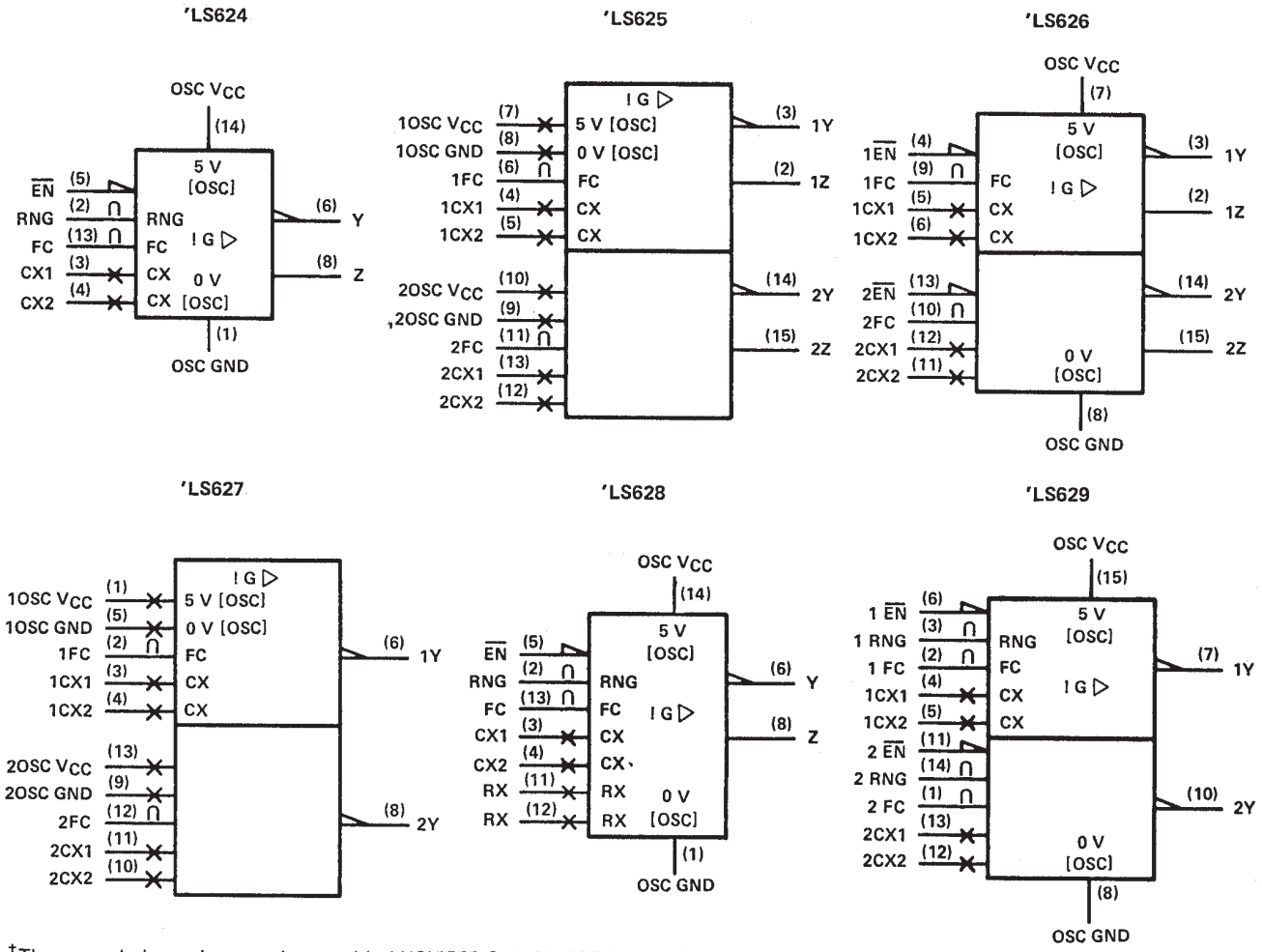

†These symbols are in accordance with ANSI/IEEE Std. 91-1984 and IEC Publication 617-12.
Pin numbers shown are for D, J, N, and W packages.

schematics of inputs and outputs

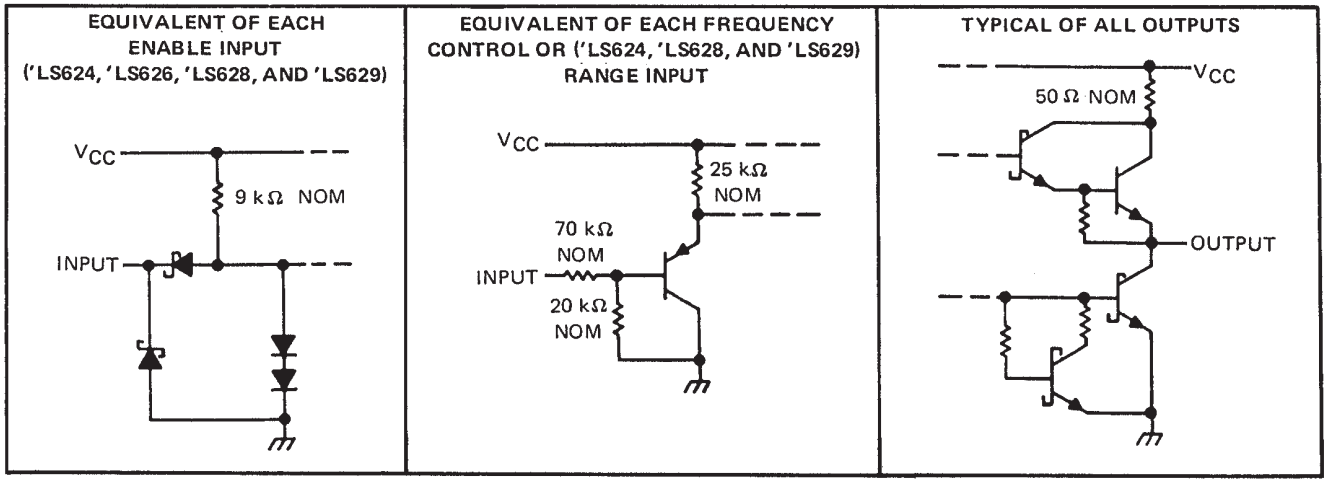

absolute maximum ratings over operating free-air temperature range (unless otherwise noted)

Supply voltage, V_{CC} (see Notes 1 and 2)		7 V
Input voltage:	Enable input†	7 V
	Frequency control or range input‡	V_{CC}
Operating free-air temperature range:	SN54LS' Circuits	−55°C to 125°C
	SN74LS' Circuits	0°C to 70°C
Storage temperature range		−65°C to 150°C

† The enable input is provided only on the 'LS624, 'LS626, 'LS628, and 'LS629.
‡ The range input is provided only on 'LS624, 'LS628, and 'LS629.

NOTE: 1. Voltage values are with respect to the appropriate ground terminal.
2. Throughout the data sheet, the symbol V_{CC} is used for the voltage applied to both the V_{CC} and OSC V_{CC} terminals, unless otherwise noted.

recommended operating conditions

	SN54LS'			SN74LS'			UNIT
	MIN	NOM	MAX	MIN	NOM	MAX	
Supply voltage, V_{CC}	4.5	5	5.5	4.75	5	5.25	V
Input voltage at frequency control or range input, $V_{I(freq)}$ or $V_{I(rng)}$	0		5	0		5	V
High-level output current, I_{OH}			–1.2			–1.2	mA
Low-level output current, I_{OL}			12			24	mA
Output frequency, f_o	1			1			Hz
			20			20	MHz
Operating free-air temperature, T_A	–55		125	0		70	°C

electrical characteristics over recommended operating free-air temperature range (unless otherwise noted)

PARAMETER			TEST CONDITIONS†		SN54LS'			SN74LS'			UNIT
					MIN	TYP‡	MAX	MIN	TYP‡	MAX	
V_{IH}	High-level input voltage at enable#				2			2			V
V_{IL}	Low-level input voltage at enable#						0.7			0.8	V
V_{IK}	Input clamp voltage at enable#		V_{CC} = MIN, I_I = –18 mA				–1.5			–1.5	V
V_{OH}	High-level output voltage		V_{CC} = MIN, $\overline{EN}$ at V_{IL} max, I_{OH} = –1.2 mA, See Note 3		2.5	3.4		2.7	3.4		V
V_{OL}	Low-level output voltage		V_{CC} = MIN, $\overline{EN}$ at V_{IL} max, See Note 3	I_{OL} = 12 mA		0.25	0.4		0.25	0.4	V
				I_{OL} = 24 mA					0.35	0.5	
I_I	Input current	Freq control or range¶	V_{CC} = MAX	V_I = 5 V		50	250		50	250	μA
				V_I = 1 V		10	50		10	50	
I_I	Input current at maximum input voltage	Enable#	V_{CC} = MAX, V_I = 7 V				0.2			0.2	mA
I_{IH}	High-level input current	Enable#	V_{CC} = MAX, V_I = 2.7 V				40			40	μA
I_{IL}	Low-level input current	Enable#	V_{CC} = MAX, V_I = 0.4 V				–0.8			–0.8	mA
I_{OS}	Short-circuit output current§		V_{CC} = MAX		–40		–225	–40		–225	mA
I_{CC}	Supply current, total into V_{CC} and OSC V_{CC} pins		V_{CC} = MAX, Enable# = 4.5 V See Note 4	'LS624		20	35		20	35	mA
				'LS625		35	55		35	55	
				'LS626		35	55		35	55	
				'LS627		35	55		35	55	
				'LS628		20	35		20	35	
				'LS629		35	55		35	55	

†For conditions shown as MIN or MAX, use the appropriate value specified under recommended operating conditions.
‡All typical values are at V_{CC} = 5 V, T_A = 25°C.
§Not more than one output should be shorted at a time and duration of the short-circuit should not exceed one second.
¶The range input is provided only on the 'LS624, 'LS628, and 'LS629.
#The enable input is provided only on the 'LS624, 'LS626, 'LS628, and 'LS629.

NOTES: 3. V_{OH} for Y outputs and V_{OL} for Z outputs are measured while enable inputs are at V_{IL} MAX, with individual 1-kΩ resistors connected from CX1 to V_{CC} and from CX2 to ground. The resistor connections are reversed for testing V_{OH} for Z outputs and V_{OL} for Y inputs.

4. For 'LS624, 'LS626, 'LS628, and 'LS629, I_{CC} is measured with the outputs disabled and open. For 'LS625 and 'LS627, I_{CC} is measured with one OSC V_{CC} = MAX, and with the other OSC V_{CC} and outputs open.

switching characteristics, V_{CC} = 5 V (unless otherwise noted), R_L = 667 Ω, C_L = 45 pF, T_A = 25 °C

PARAMETER		TEST CONDITIONS		'LS624, 'LS628, 'LS629			'LS625, 'LS626, 'LS627			UNIT
				MIN	TYP	MAX	MIN	TYP	MAX	
f_O	Output frequency	C_{ext} = 50 pF	$V_{I(freq)}$ = 5 V, $V_{I(rng)}$ = 0 V	15	20	25				MHz
			$V_{I(freq)}$ = 1 V, $V_{I(rng)}$ = 5 V	1.1	1.6	2.1				
			$V_{I(freq)}$ = 5 V				7	9.5	12	
			$V_{I(freq)}$ = 0 V				0.9	1.2	1.5	

TYPICAL CHARACTERISTICS

'LS624, 'LS628, 'LS629

OUTPUT FREQUENCY
vs
FREQUENCY-CONTROL INPUT VOLTAGE†

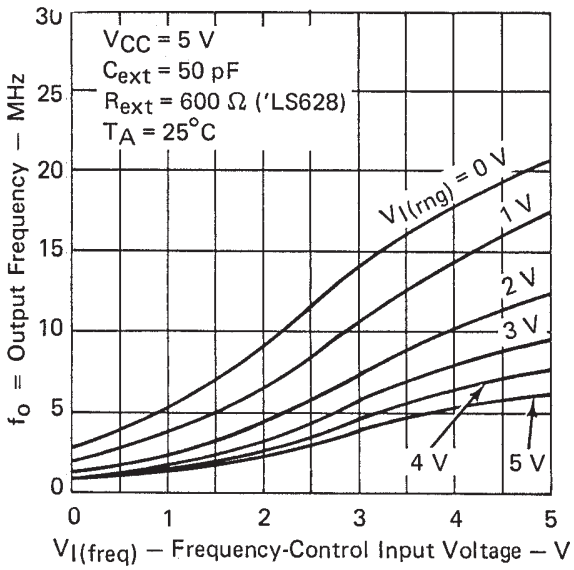

FIGURE 1

'LS624, 'LS628, 'LS629

OUTPUT FREQUENCY
vs
FREQUENCY-CONTROL INPUT VOLTAGE†

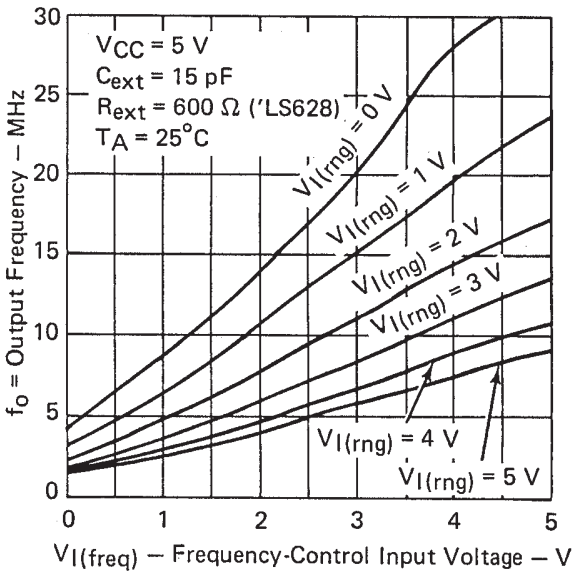

FIGURE 2

†Due to the effects of stray capacitance the output frequency may be unstable when the frequency control voltage is less than 1 volt.

TYPICAL CHARACTERISTICS

'LS624, 'LS628, 'LS629

OUTPUT FREQUENCY
vs
EXTERNAL CAPACITANCE

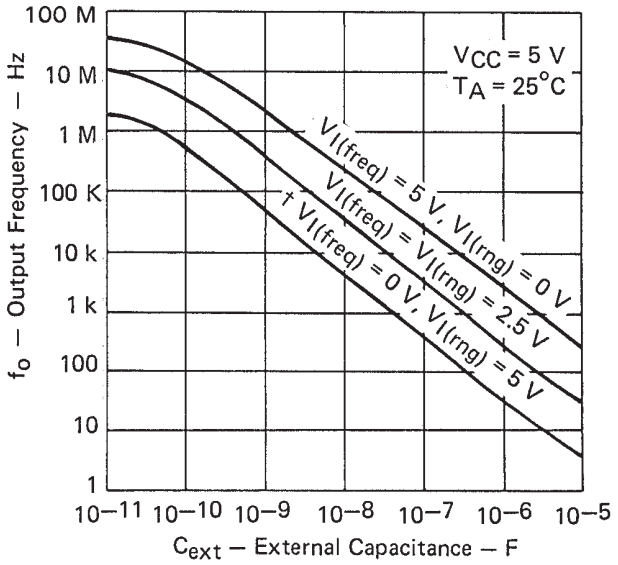

FIGURE 3

'LS625, 'LS626, 'LS627

OUTPUT FREQUENCY
vs
FREQUENCY-CONTROL INPUT VOLTAGE†

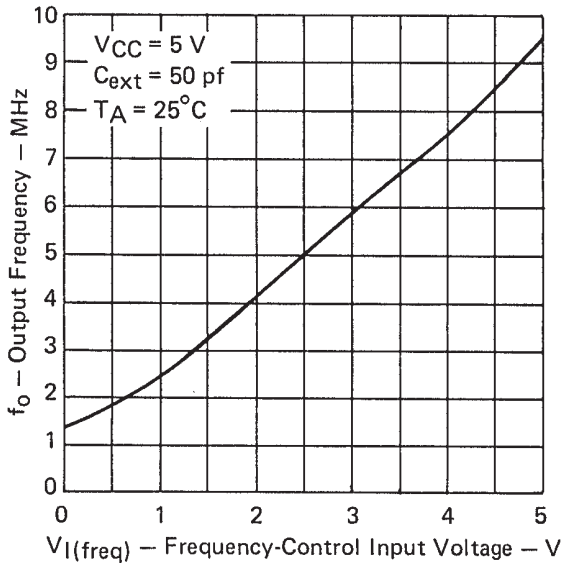

FIGURE 4

'LS625, 'LS626, 'LS627

OUTPUT FREQUENCY
vs
FREQUENCY-CONTROL INPUT VOLTAGE

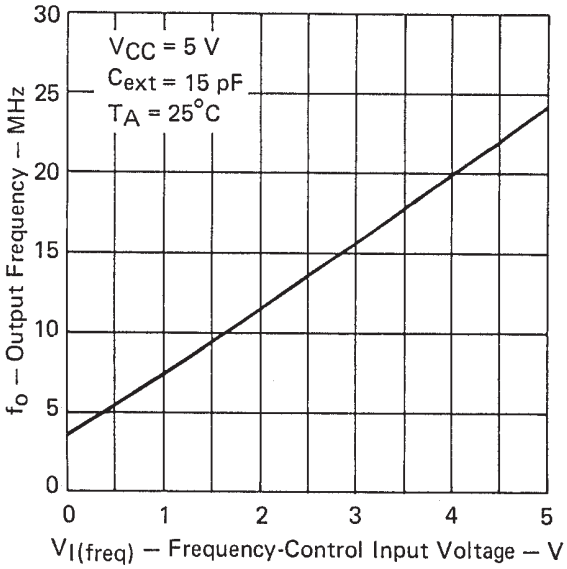

FIGURE 5

'LS625, 'LS626, 'LS627

OUTPUT FREQUENCY
vs
EXTERNAL CAPACITANCE

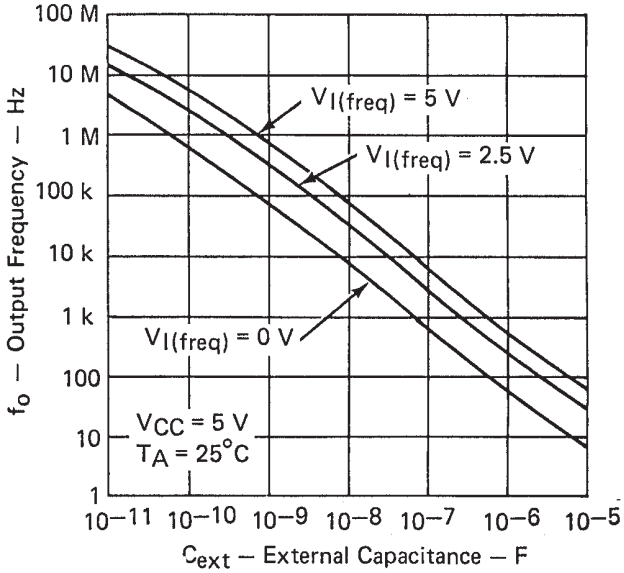

FIGURE 6

† Due to the effects of stray capacitance the output frequency may be unstable when the frequency control voltage is less than 1 volt.

TYPICAL CHARACTERISTICS

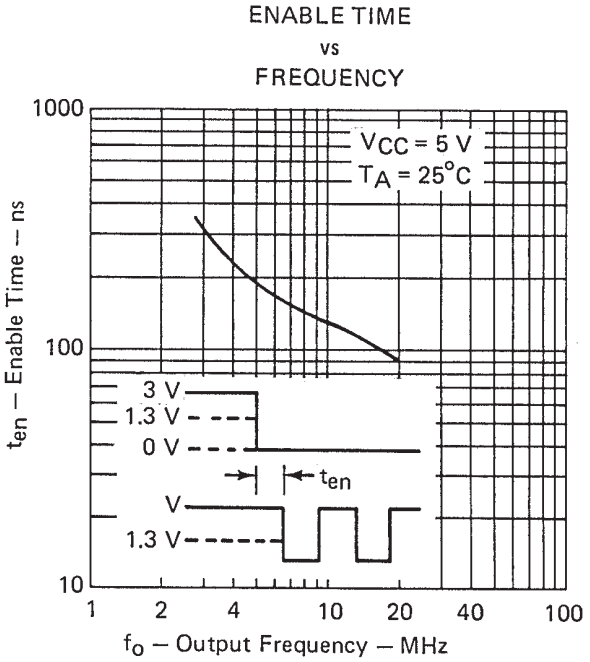

FIGURE 7

TYPICAL APPLICATIONS DATA

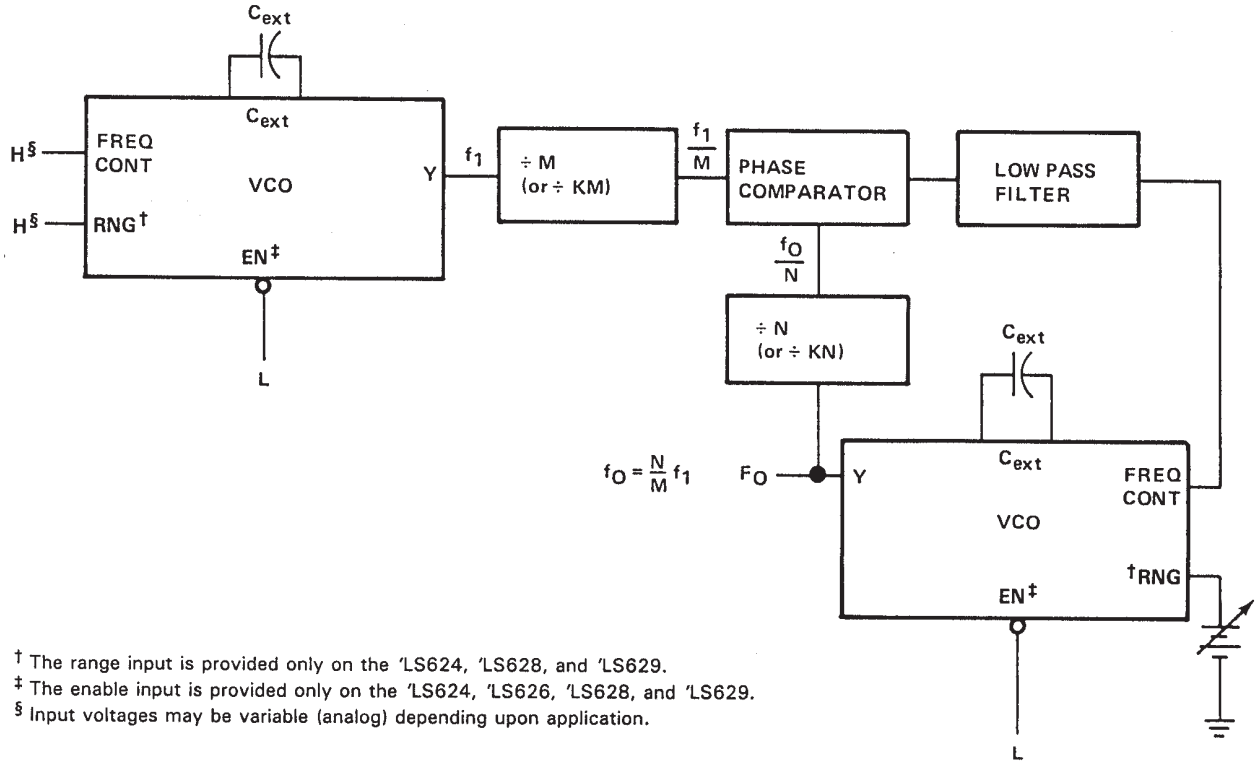

† The range input is provided only on the 'LS624, 'LS628, and 'LS629.
‡ The enable input is provided only on the 'LS624, 'LS626, 'LS628, and 'LS629.
§ Input voltages may be variable (analog) depending upon application.

FIGURE A–PHASE-LOCKED LOOP.

IMPORTANT NOTICE

Texas Instruments and its subsidiaries (TI) reserve the right to make changes to their products or to discontinue any product or service without notice, and advise customers to obtain the latest version of relevant information to verify, before placing orders, that information being relied on is current and complete. All products are sold subject to the terms and conditions of sale supplied at the time of order acknowledgement, including those pertaining to warranty, patent infringement, and limitation of liability.

TI warrants performance of its semiconductor products to the specifications applicable at the time of sale in accordance with TI's standard warranty. Testing and other quality control techniques are utilized to the extent TI deems necessary to support this warranty. Specific testing of all parameters of each device is not necessarily performed, except those mandated by government requirements.

CERTAIN APPLICATIONS USING SEMICONDUCTOR PRODUCTS MAY INVOLVE POTENTIAL RISKS OF DEATH, PERSONAL INJURY, OR SEVERE PROPERTY OR ENVIRONMENTAL DAMAGE ("CRITICAL APPLICATIONS"). TI SEMICONDUCTOR PRODUCTS ARE NOT DESIGNED, AUTHORIZED, OR WARRANTED TO BE SUITABLE FOR USE IN LIFE-SUPPORT DEVICES OR SYSTEMS OR OTHER CRITICAL APPLICATIONS. INCLUSION OF TI PRODUCTS IN SUCH APPLICATIONS IS UNDERSTOOD TO BE FULLY AT THE CUSTOMER'S RISK.

In order to minimize risks associated with the customer's applications, adequate design and operating safeguards must be provided by the customer to minimize inherent or procedural hazards.

TI assumes no liability for applications assistance or customer product design. TI does not warrant or represent that any license, either express or implied, is granted under any patent right, copyright, mask work right, or other intellectual property right of TI covering or relating to any combination, machine, or process in which such semiconductor products or services might be or are used. TI's publication of information regarding any third party's products or services does not constitute TI's approval, warranty or endorsement thereof.

Copyright © 1999, Texas Instruments Incorporated

Общество с ограниченной ответственностью «МосЧип» ИНН 7719860671 / КПП 771901001
Адрес: 105318, г.Москва, ул.Щербаковская д.3, офис 1107

Данный компонент на территории Российской Федерации

Вы можете приобрести в компании MosChip.

Для оперативного оформления запроса Вам необходимо перейти по данной ссылке:

http://moschip.ru/get-element

Вы можете разместить у нас заказ для любого Вашего проекта, будь то серийное производство или разработка единичного прибора.

В нашем ассортименте представлены ведущие мировые производители активных и пассивных электронных компонентов.

Нашей специализацией является поставка электронной компонентной базы двойного назначения, продукции таких производителей как XILINX, Intel (ex.ALTERA), Vicor, Microchip, Texas Instruments, Analog Devices, Mini-Circuits, Amphenol, Glenair.

Сотрудничество с глобальными дистрибьюторами электронных компонентов, предоставляет возможность заказывать и получать с международных складов практически любой перечень компонентов в оптимальные для Вас сроки.

На всех этапах разработки и производства наши партнеры могут получить квалифицированную поддержку опытных инженеров.

Система менеджмента качества компании отвечает требованиям в соответствии с ГОСТ Р ИСО 9001, ГОСТ РВ 0015-002 и ЭС РД 009

Офис по работе с юридическими лицами:

105318, г.Москва, ул.Щербаковская д.3, офис 1107, 1118, ДЦ «Щербаковский»

Телефон: +7 495 668-12-70 (многоканальный)

Факс: +7 495 668-12-70 (доб.304)

E-mail: info@moschip.ru

Skype отдела продаж:
moschip.ru
moschip.ru_4
moschip.ru_6
moschip.ru_9