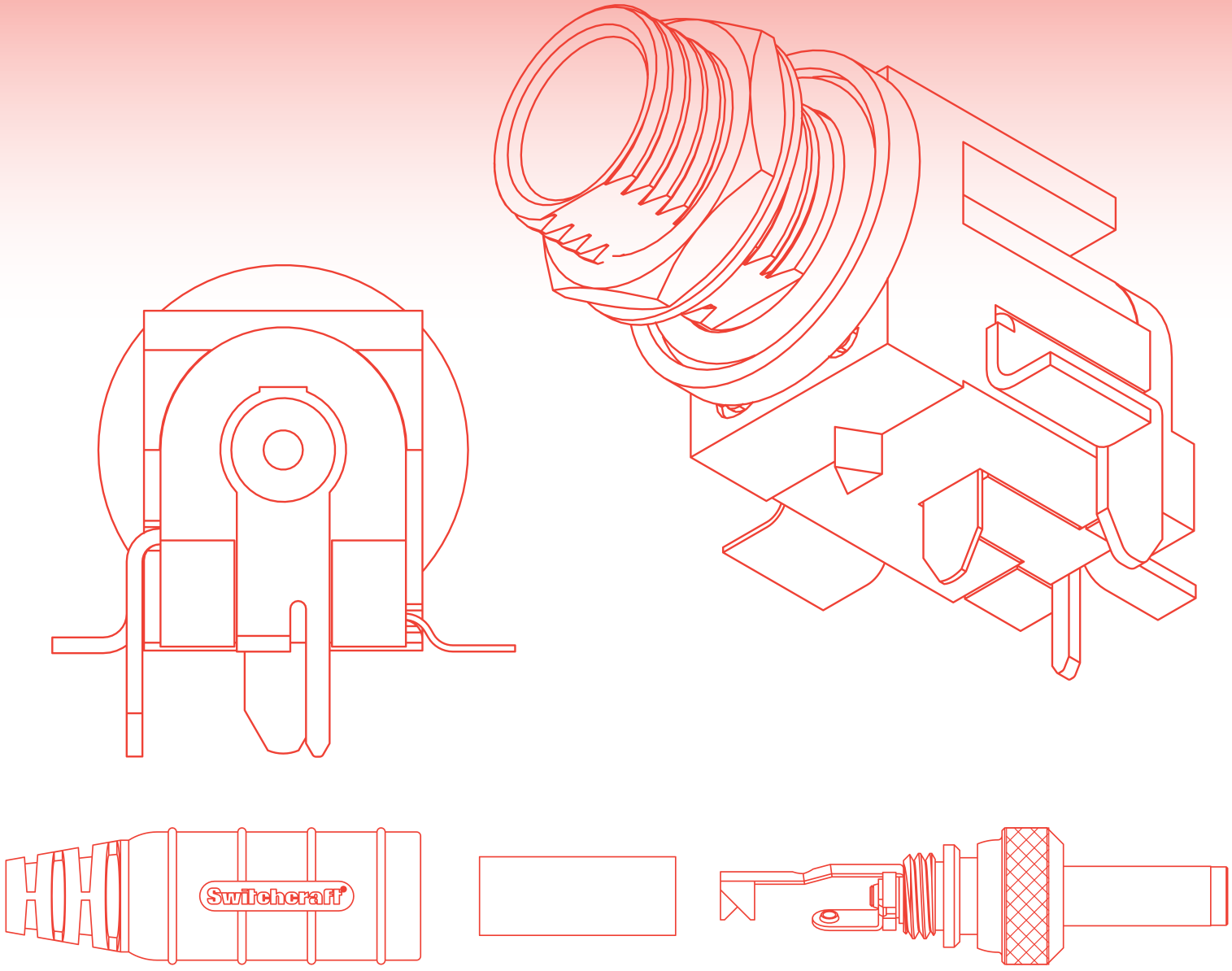

HIGH AMPERAGE, SEALED/NON-SEALED, LOCKING/ NON-LOCKING POWER JACKS & PLUGS

NEW PRODUCT BULLETIN 599

SWITCHCRAFT®

A HEICO COMPANY

5555 N Elston Ave | Chicago, IL 60630 | P: 773.792.2700 | F: 773.792.2129 | www.switchcraft.com | Made in USA.

HIGH AMPERAGE, SEALED/NON-SEALED, LOCKING/ NON-LOCKING POWER JACKS & PLUGS

NEW PRODUCT BULLETIN 599

FEATURES & BENEFITS

- Up to 11A current rating (carry), 24 V DC
- -40°C to 105° C operating temperature
- Locking/Non-Locking versions available
- Automatic switch over from AC to DC permitted by sleeve shunt spring
- Available in sealed & non-sealed versions
- Sealed versions sealed to IP68, NEMA 250 (6P) (when mated)

APPLICATIONS

- Any sealed data transmission
- Military or industrial GPS location devices
- Instrumentation
- Medical equipment
- Marine Applications
- Transportation
- General industrial electronic applications
- Power supplies

HIGH AMPERAGE, SEALED/NON-SEALED, LOCKING/ NON-LOCKING POWER JACKS & PLUGS

NEW PRODUCT BULLETIN 599

SPECIFICATIONS

Mechanical Specifications

Life:	5000 cycles minimum
Vibration:	Mil-Std 202G Method 201A **(Only Locking)**
Operating Forces:	5 lb maximum insertion. 0.5 lb minimum withdrawal
Panel Mounting Torque:	8-10 in-lb

Electrical Specifications

Voltage Rating:	24 V AC/DC
Current Rating:	Refer to current rating table
Insulation Resistance:	1000MΩ min
Contact Resistance (initial):	15 mΩ max

Environmental Specifications

Operating Temperature Rating:	-40 °C to +105 °C(-40ºF to +221°F)
Moisture Resistance	MIL-STD 202G Method 106G **(Sealed Only)**
Insulation Resistance	MIL-STD 202G Method 302 Condition B
Thermal Shock:	MIL-STD 202G Method 107G
Salt Atmosphere (Corrosion):	MIL-STD 202G Method 101E Condition B **(Sealed Only)**
Weathertight Ratings:	IP66, IP67, IP68, NEMA 250 (6p) when mated **(Sealed Only, when mated)**

Material Specifications - Jacks

Housing, Cover (insulators):	Thermoplastic, Black
Mounting Bushing, Hex Nut:	Copper Alloy, Nickel Plated
Flat Washer:	Steel, Nickel Plated
O-Ring:	Elastomer, Black
Center Pin:	Copper Alloy, Nickel Plated
Center Pin Terminal & Shunt Terminals:	Copper Alloy, Silver or Matte Tin Plated
Sleeve Spring Terminal:	Spring Copper Alloy, Silver or Matte Tin Plated

Material Specifications - Plugs

Plug Barrel (Sleeve):	Copper Alloy, Nickel Plated
Coupling Ring:	Copper Alloy, Nickel Plated
Metal Handle:	Copper Alloy, Nickel Plated
Rubber Seal Handle:	Black Elastomer over Metal Handle
O-Ring:	Elastomer, Black
Center Contact (Tip):	Copper Alloy, Silver Plated
Tip & Sleeve Terminals:	Copper Alloy, Tin Plated
Tip Insulator:	Thermoplastic, Blue
Terminal Insulator:	Epoxy Glass FR4
Tubular Insulator:	Mylar

HIGH AMPERAGE, SEALED/NON-SEALED, LOCKING/ NON-LOCKING POWER JACKS & PLUGS

NEW PRODUCT BULLETIN 599

PC-MOUNT HIGH AMERPAGE POWER JACKS

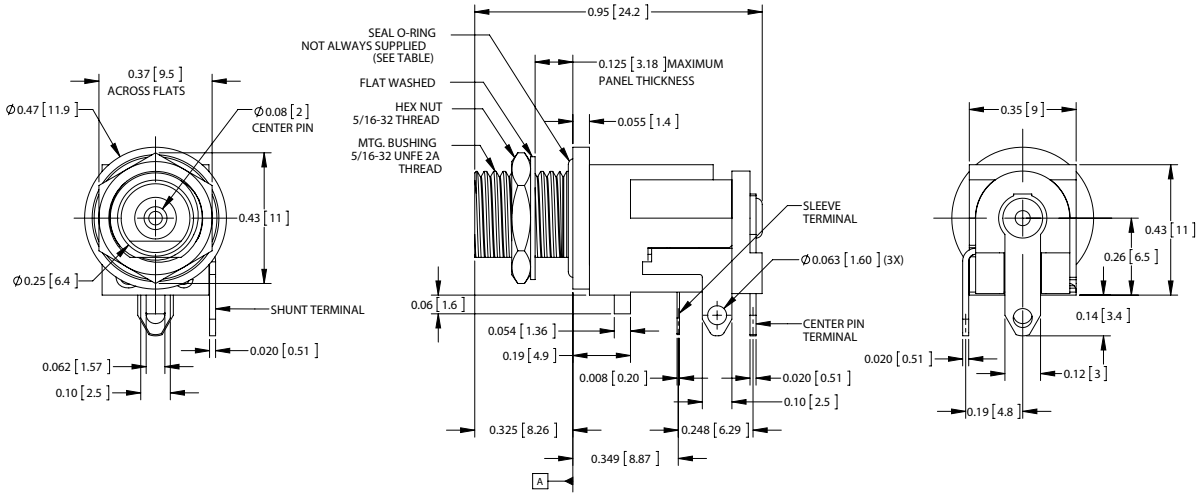

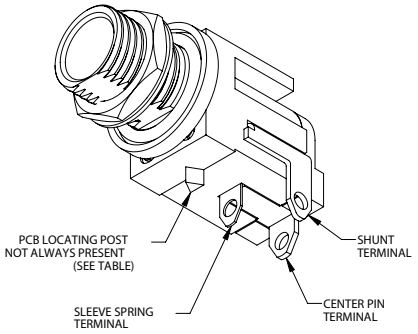

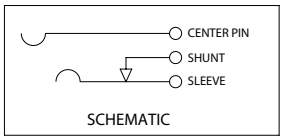

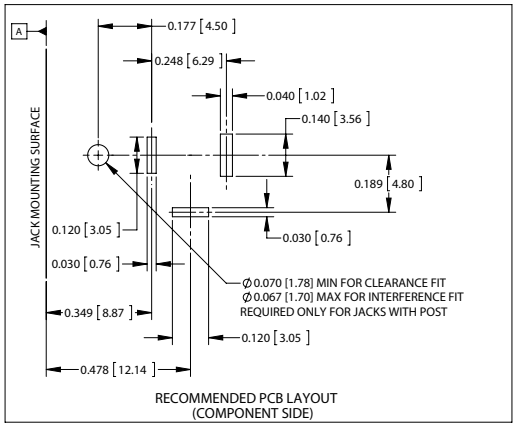

RECOMMENDED PCB LAYOUT
(COMPONENT SIDE)

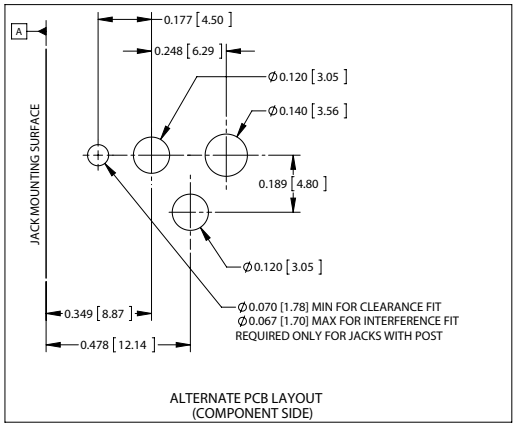

ALTERNATE PCB LAYOUT
(COMPONENT SIDE)

HIGH AMPERAGE, SEALED/NON-SEALED, LOCKING/ NON-LOCKING POWER JACKS & PLUGS

NEW PRODUCT BULLETIN 599

SMT-MOUNT HIGH AMERPAGE POWER JACKS

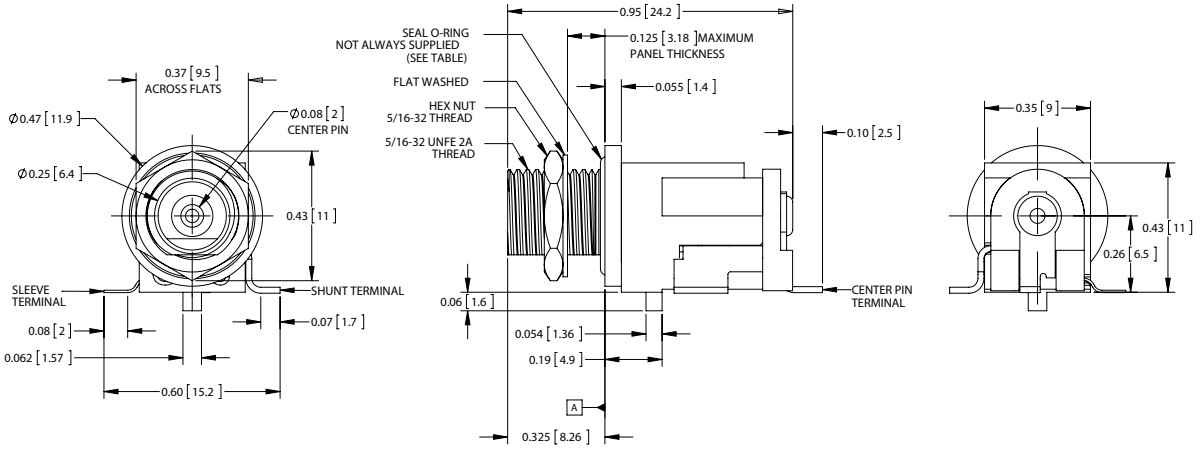

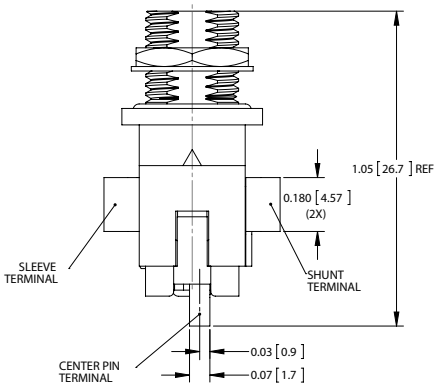

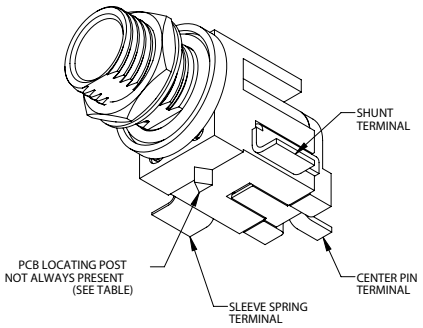

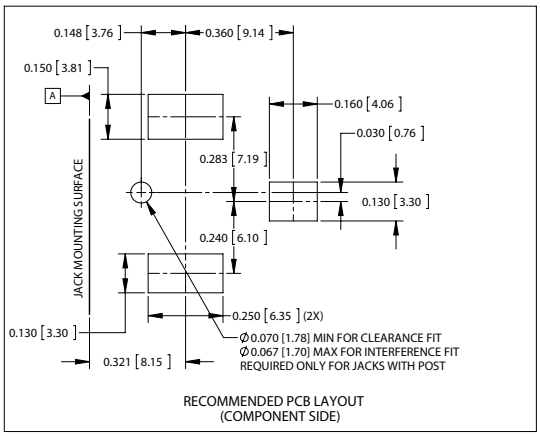

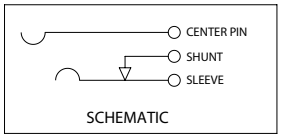

HIGH AMPERAGE, SEALED/NON-SEALED, LOCKING/ NON-LOCKING POWER JACKS & PLUGS

NEW PRODUCT BULLETIN 599

HYBRID-MOUNT HIGH AMERPAGE POWER JACKS

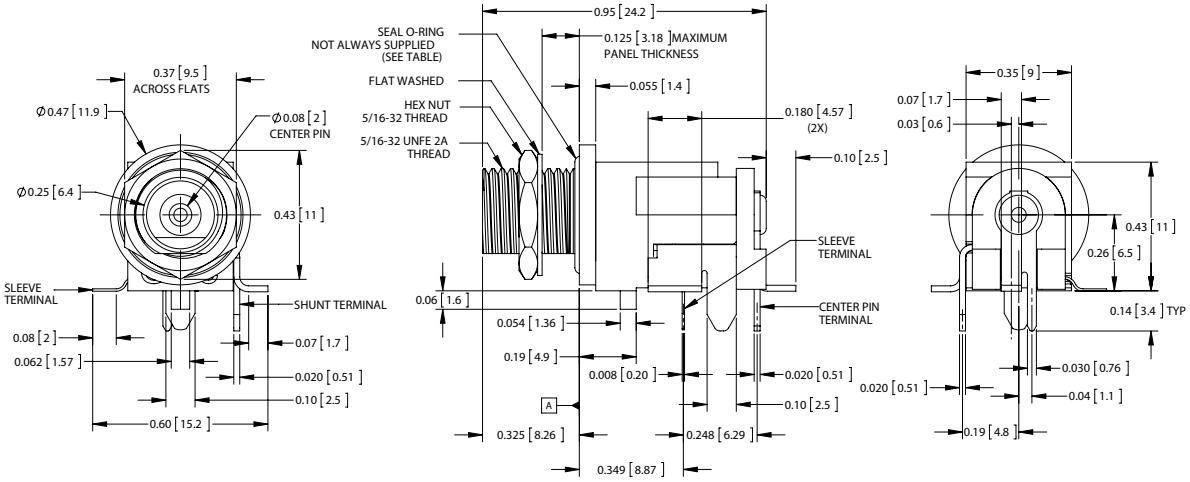

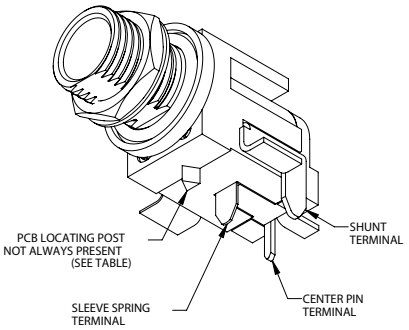

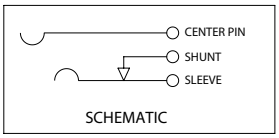

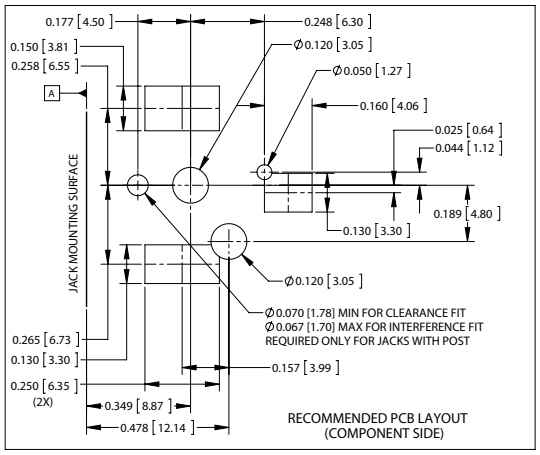

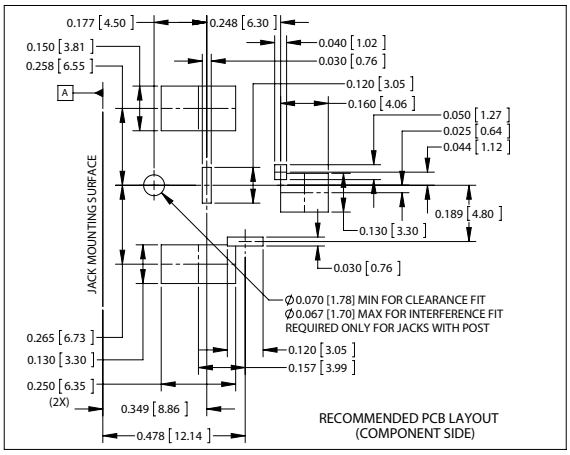

HIGH AMPERAGE, SEALED/NON-SEALED, LOCKING/ NON-LOCKING POWER JACKS & PLUGS

NEW PRODUCT BULLETIN 599

LOCKING and SEALING PLUGS S10KS12, S10KS15, S10KS17

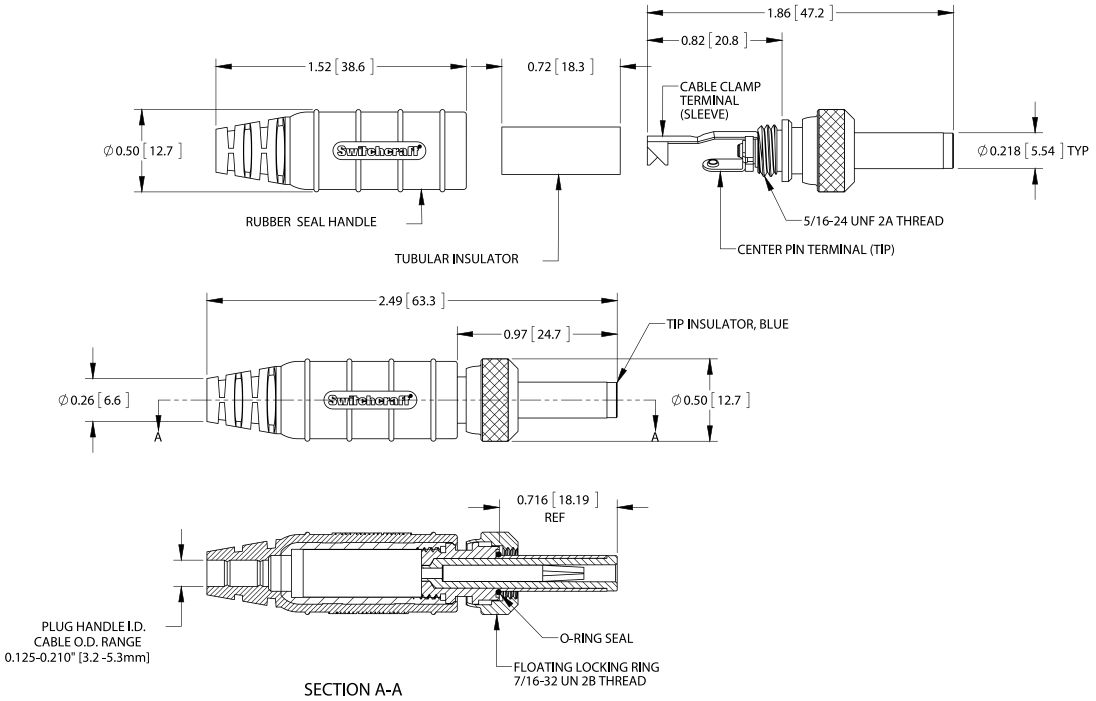

LOCKING, NON-SEALING PLUG S10K

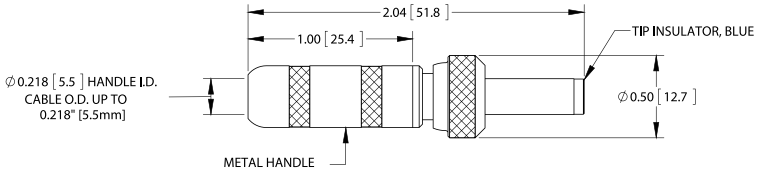

NON-LOCKING, NON-SEALING PLUGS S1012, S1015, S1017

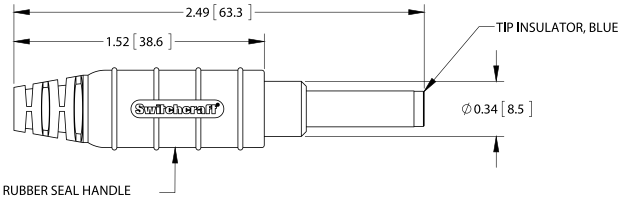

NON-LOCKING, NON-SEALING PLUG S10

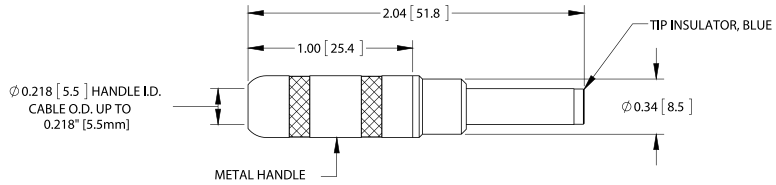

HIGH AMPERAGE, SEALED/NON-SEALED, LOCKING/ NON-LOCKING POWER JACKS & PLUGS

NEW PRODUCT BULLETIN 599

CURRENT RATING TABLE

Jack Terminal Plating	Wire (awg)	Current Rating (A) at Operating Temperature (°C)					
		55°C max	65°C max	75°C max	85°C max	95°C max	105°C max
Silver	16	11	10	9.5	9	7.5	6
	18	9.5	9	8	7	5.5	5
	20	9	8	6.5	6	5	4
Tin	16	11	10	9	8	7	5.5
	18	9.5	9	8	7	5.5	5
	20	8.5	8	6.5	5.5	5	4

Note: DC Power Plugs & Jacks are for current carry only. Switching Power Jack on-off under resistive load is not recommended. The circuitry on-off switch should be off before connecting or disconnecting the Power Plug to Jack. For electrical life limitations under resistive load, consult factory.

HIGH AMPERAGE POWER PLUG ORDERING CODE:

S 1 0 [ ] [ ] [ ]

S10 Series

Locking option:
K - Locking
blank - non-locking

Seal option:
S - Sealed
blank - non-sealed

Handle options:
12 - rubber over metal sealing handle for cable O.D. 0.125 - 0.150" [3.2 - 3.8mm]
15 - rubber over metal sealing handle for cable O.D. 0.150 - 0.175" [3.8 - 4.4mm]
17 - rubber over metal sealing handle for cable O.D. 0.175 - 0.210" [4.4 - 5.3mm]
blank - metal, non-sealing handle for cable O.D. up to 0.218" [5.5mm]

HIGH AMPERAGE POWER JACK ORDERING CODE:

R A [ ] [ ] 10 [ ] [ ]

Terminal Plating:
S - Tin
blank - Silver

Termination Type:
PC - Through Hole
SM - Surface Mount
SH - Hybrid

Seal option:
S - Sealed
blank - non-sealed

Locating Post option:
P - with Post
blank - without Post

Notes:
1. Standard packaging is bulk. Contact factory for tube or tape & reel packaging options.
2. Tin plating currently not available for the hybrid (SH) termination option.

Общество с ограниченной ответственностью «МосЧип» ИНН 7719860671 / КПП 771901001
Адрес: 105318, г.Москва, ул.Щербаковская д.3, офис 1107

Данный компонент на территории Российской Федерации

Вы можете приобрести в компании MosChip.

Для оперативного оформления запроса Вам необходимо перейти по данной ссылке:

http://moschip.ru/get-element

Вы можете разместить у нас заказ для любого Вашего проекта, будь то серийное производство или разработка единичного прибора.

В нашем ассортименте представлены ведущие мировые производители активных и пассивных электронных компонентов.

Нашей специализацией является поставка электронной компонентной базы двойного назначения, продукции таких производителей как XILINX, Intel (ex.ALTERA), Vicor, Microchip, Texas Instruments, Analog Devices, Mini-Circuits, Amphenol, Glenair.

Сотрудничество с глобальными дистрибьюторами электронных компонентов, предоставляет возможность заказывать и получать с международных складов практически любой перечень компонентов в оптимальные для Вас сроки.

На всех этапах разработки и производства наши партнеры могут получить квалифицированную поддержку опытных инженеров.

Система менеджмента качества компании отвечает требованиям в соответствии с ГОСТ Р ИСО 9001, ГОСТ РВ 0015-002 и ЭС РД 009

Офис по работе с юридическими лицами:

105318, г.Москва, ул.Щербаковская д.3, офис 1107, 1118, ДЦ «Щербаковский»

Телефон: +7 495 668-12-70 (многоканальный)

Факс: +7 495 668-12-70 (доб.304)

E-mail: info@moschip.ru

Skype отдела продаж:
moschip.ru
moschip.ru_4
moschip.ru_6
moschip.ru_9