SMP100LC

Trisil™ for telecom equipment protection

Features

- Bidirectional crowbar protection
- Voltage range from 8 V to 400 V
- Low capacitance from 20 pF to 45 pF @ 2 V
- Low leakage current: I_R = 2 µA max
- Holding current: I_H = 150 mA min.
- Repetitive peak pulse current: I_{PP} = 100 A (10/1000 µs)

Benefits

- Trisils are not subject to ageing and provide a fail safe mode in short circuit for better protection.
- Helps equipment meet main standards such as UL60950, IEC 950 / CSA C22.2 and UL1459.
- Epoxy meets UL94, V0.
- Package is JEDEC registered (DO-214AA).

Complies with the following standards

- GR-1089 Core
- ITU-T-K20/K21
- IEC 61000-4-5
- IEC 61000-4-2 level 4
- TIA/EIA IS-968
- UL497B recognized, UL file E136224

Applications

Any sensitive equipment requiring protection against lightning strikes and AC power faults. These devices are dedicated to central office protection as they comply with the most stressful standards. Their low capacitances make them suitable for xDSL.

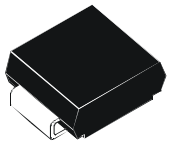

SMB
(JEDEC DO-214AA)

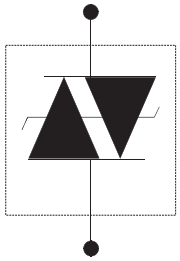

Description

The SMP100LC is a series of low capacitance transient surge arrestors designed for the protection of high data rate communication equipment. The low capacitance of the devices avoids any distortion of the signal and is compatible with digital transmission line cards (xDSL, ISDN...).

SMP100LC series tested and confirmed compatible with Cooper Bussmann Telecom Circuit Protector TCP 1.25A.

The SMP100LC-xxx with the fuse TCP1.25A or TCP2A is compliant with Telcordia GR1089 (lightning and AC power fault tests), ITU-T K20/K21 (lightning and AC power fault tests), TIA/EIA-IS-968 (formerly FCC Part 68 lightning tests), and UL60950 (AC power fault tests). The use of the TCP1.25A allows the SMP100LC-xxx to be safe for the 2nd level (B criteria) AC power fault tests.

TM: Trisil is a trademark of STMicroelectronics

1 Characteristics

Table 1. In compliance with the following standards

Standard	Peak surge voltage (V)	Waveform voltage	Required peak current (A)	Current waveform	Minimum serial resistor to meet standard (Ω)
GR-1089 Core First level	2500 1000	2/10 µs 10/1000 µs	500 100	2/10 µs 10/1000 µs	0 0
GR-1089 Core Second level	5000	2/10 µs	500	2/10 µs	0
GR-1089 Core Intra-building	1500	2/10 µs	100	2/10 µs	0
ITU-T-K20/K21	6000 1500	10/700 µs	150 37.5	5/310 µs	0 0
ITU-T-K20 (IEC61000-4-2)	8000 15000	1/60 ns	ESD contact discharge ESD air discharge		0 0
IEC61000-4-5	4000 4000	10/700 µs 1.2/50 µs	100 100	5/310 µs 8/20 µs	0 0
TIA/EIA IS-968, lightning surge type A	1500 800	10/160 µs 10/560 µs	200 100	10/160 µs 10/560 µs	0 0
TIA/EIA IS-968, lightning surge type B	1000	9/720 µs	25	5/320 µs	0

Table 2. Absolute ratings (T_{amb} = 25 °C)

Symbol	Parameter		Value	Unit
I_{PP}	Repetitive peak pulse current (see *Figure 2*)	10/1000 µs 8/20 µs 10/560 µs 5/310 µs 10/160 µs 1/20 µs 2/10 µs	100 400 140 150 200 400 500	A
I_{FS}	Fail-safe mode: maximum current (1)	8/20 µs	5	kA
I_{TSM}	Non repetitive surge peak on-state current (sinusoidal)	t = 0.2 s t = 1 s t = 2 s t = 15 mn	24 15 12 4	A
I^2t	I^2t value for fusing	t = 16.6 ms t = 20 ms	20 21	A^2s
T_{stg}	Storage temperature range		-55 to 150	°C
T_j	Operating junction temperature range		-40 to 150	
T_L	Maximum lead temperature for soldering during 10 s.		260	°C

1. In fail safe mode, the device acts as a short circuit.

Table 3. Thermal resistances

Symbol	Parameter	Value	Unit
$R_{th(j-a)}$	Junction to ambient (with recommended footprint)	100	°C/W
$R_{th(j-l)}$	Junction to leads	20	°C/W

Figure 1. Electrical characteristics - definitions (T_{amb} = 25 °C)

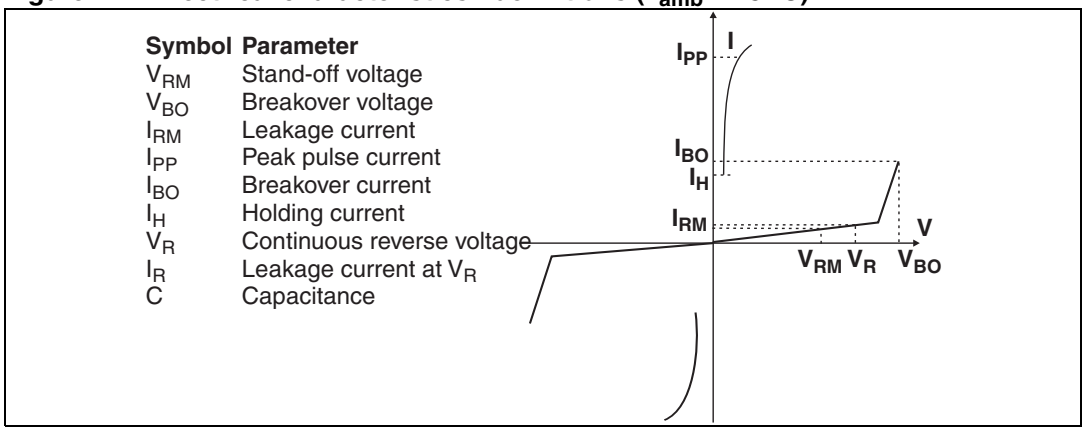

Table 4. Electrical characteristics - values (T_{amb} = 25 °C)

Order code	I_{RM} @ V_{RM}		I_R @ V_R		Dynamic V_{BO} (1)	Static V_{BO} @ I_{BO} (2)		I_H (3)	C(4)	C(5)
	max.		max.		max.	max.	max.	min.	typ.	typ.
	µA	V	µA	V	V	V	mA	mA	pF	pF
SMP100LC-8	2	6	5	8	25	15	800	50 (typ.)	NA	75
SMP100LC-25		22		25	40	35		150	NA	65
SMP100LC-35		32		35	55	55			NA	55
SMP100LC-65		55		65	85	85			45	90
SMP100LC-90		81		90	120	125			40	80
SMP100LC-120		108		120	155	150			35	75
SMP100LC-140		126		140	180	175			30	65
SMP100LC-160		144		160	205	200			30	65
SMP100LC-200		180		200	255	250			30	60
SMP100LC-230		207		230	295	285			30	60
SMP100LC-270		243		270	345	335			30	60
SMP100LC-320		290		320	400	390			25	50
SMP100LC-360		325		360	460	450			25	50
SMP100LC-400		360		400	540	530			20	45

1. See *Figure 16: Test circuit 1 for Dynamic I_{BO} and V_{BO} parameters*
2. See *Figure 17: Test circuit 2 for I_{BO} and V_{BO} parameters*
3. See *Figure 18: Test circuit 3 for dynamic I_H parameter*
4. V_R = 50 V bias, V_{RMS} =1 V, F = 1 MHz
5. V_R = 2V bias, V_{RMS} =1 V, F = 1 MHz

Figure 2. Pulse waveform

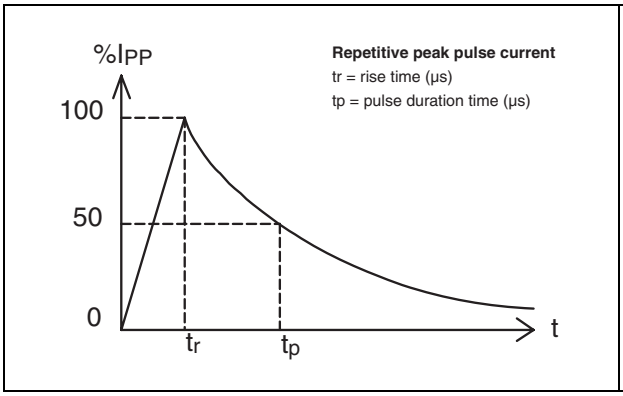

Figure 3. Non repetitive surge peak on-state current versus overload duration

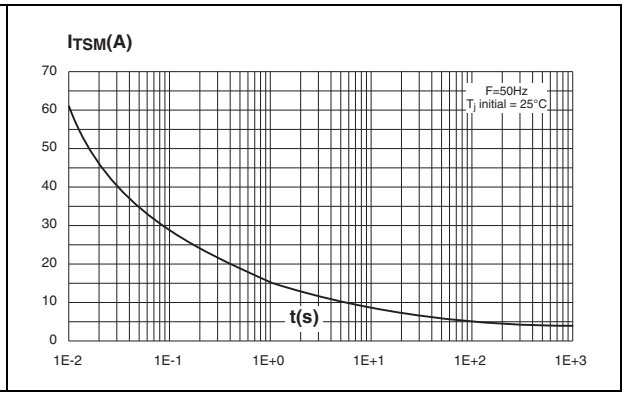

Figure 4. On-state voltage versus on-state current (typical values)

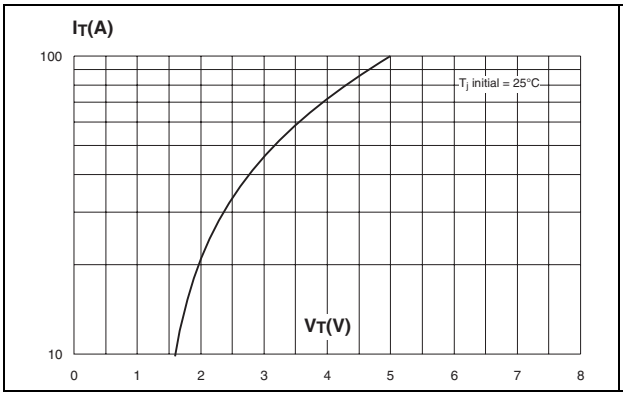

Figure 5. Relative variation of holding current versus junction temperature

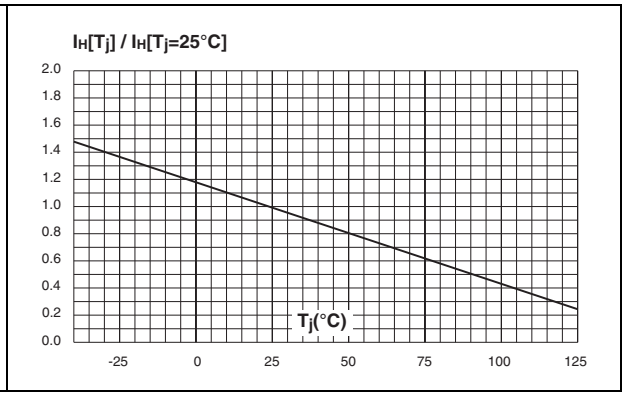

Figure 6. Relative variation of breakover voltage versus junction temperature

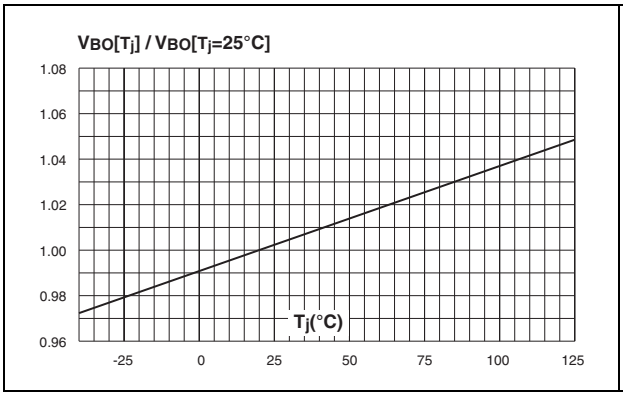

Figure 7. Relative variation of leakage current versus junction temperature (typical values)

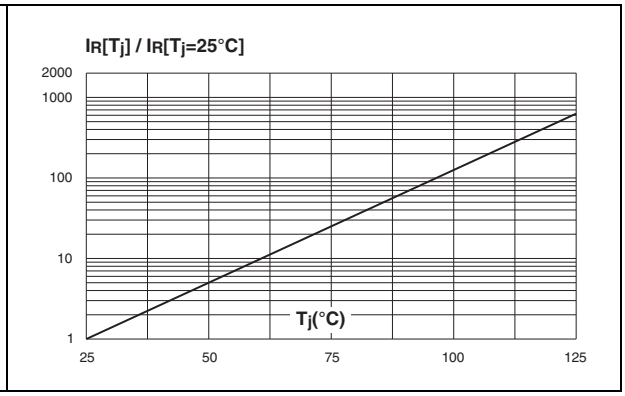

Figure 8. Variation of thermal impedance junction to ambient versus pulse duration

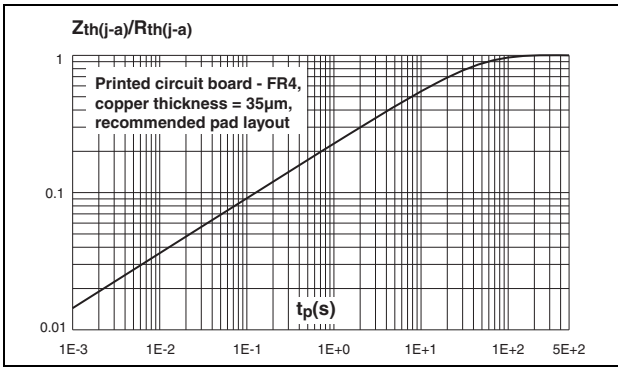

Figure 9. Relative variation of junction capacitance versus reverse voltage applied (typical values)

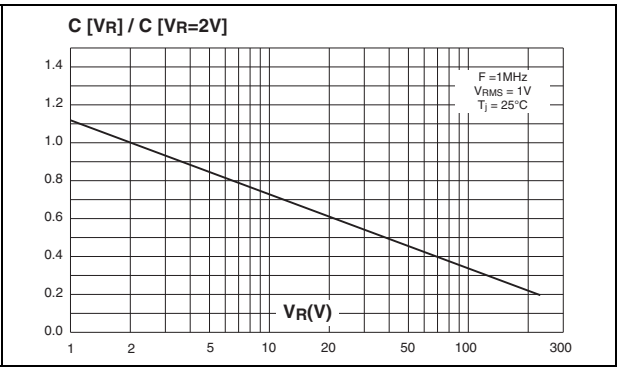

2 Application information

In wire line applications, analog or digital, both central office and subscriber sides have to be protected. This function is assumed by a combined series / parallel protection stage.

Figure 10. Examples of protection stages for line cards

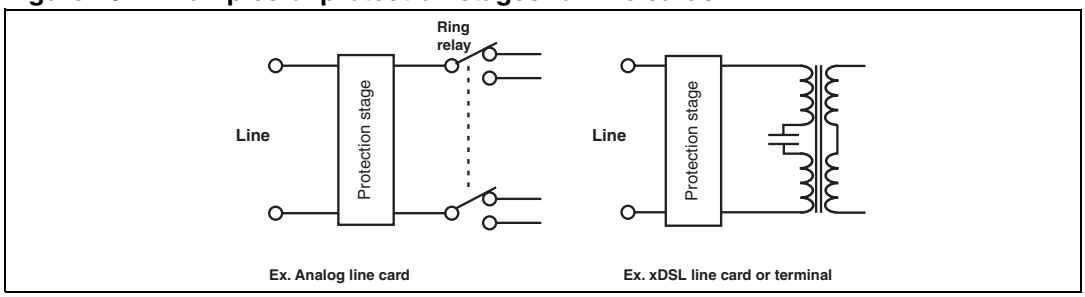

In such a stage, parallel function is assumed by one or several Trisil, and is used to protect against short duration surge (lightning). During this kind of surges the Trisil limits the voltage across the device to be protected at its break over value and then fires. The fuse assumes the series function, and is used to protect the module against long duration or very high current mains disturbances (50/60Hz). It acts by safe circuit opening. Lightning surge and mains disturbance surges are defined by standards like GR1089, TIA/EIA IS-968, ITU-T K20.

Figure 11. Typical circuits

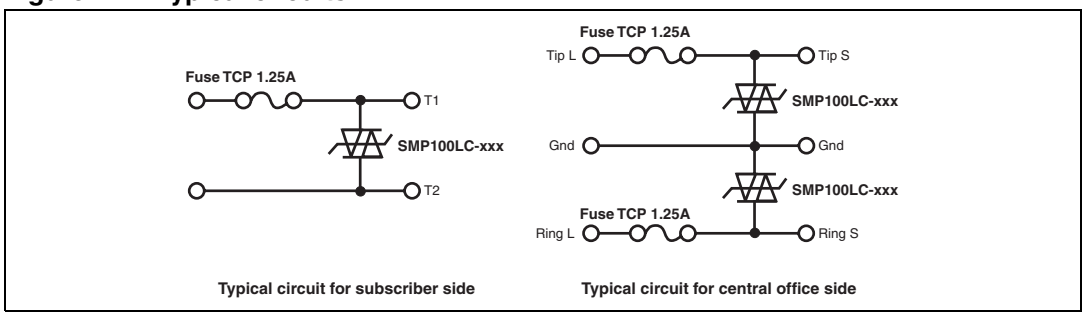

Figure 12. Test method of the board with fuse and Trisil

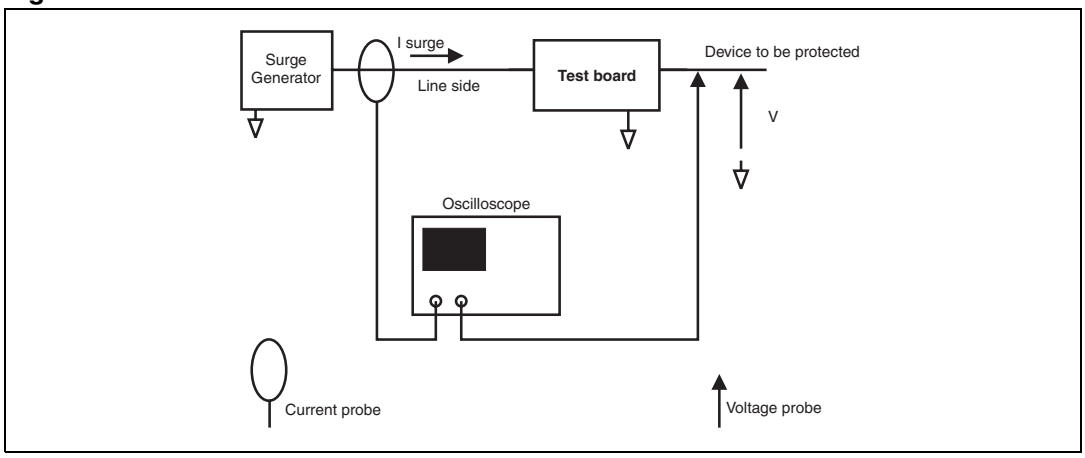

These topologies, using SMP100LC from ST and TCP1.25A from Cooper Bussmann, have been functionally validated with a Trisil glued on the PCB. Following example was performed with SMP100LC-270 Trisil. For more information, see Application Note AN2064.

Figure 13. Trisil turns on during lightning strike

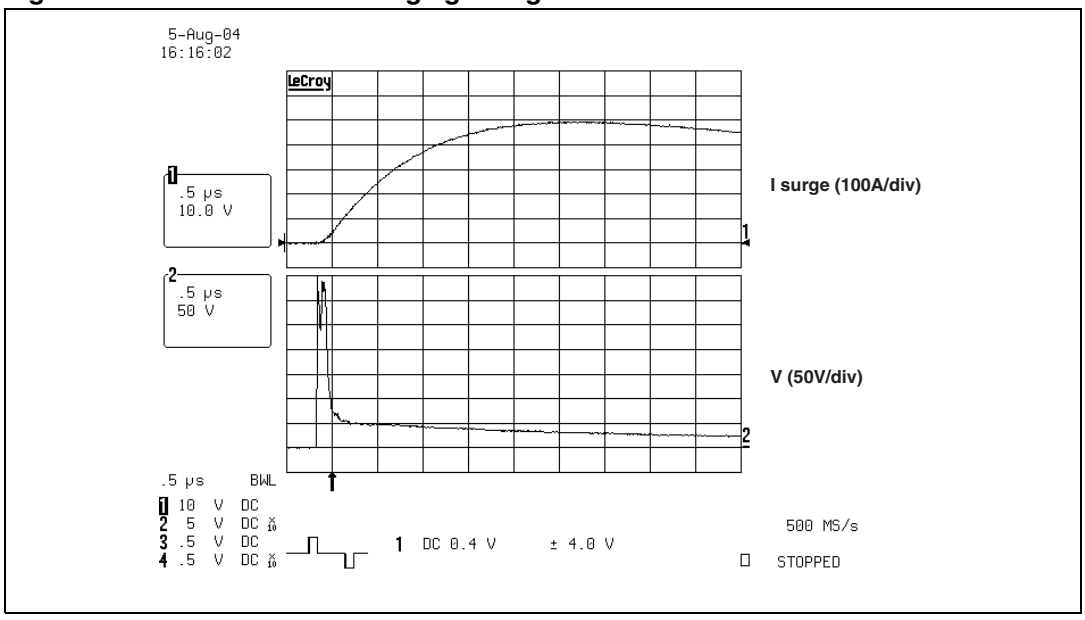

Test conditions:

2/10 µs + and - 2.5 and 5 kV, 500 A (10 pulses of each polarity), T_{amb} = 25 °C

Test result:

Fuse and Trisil OK after test in accordance with GR1089 requirements.

Figure 14. Trisil action while fuse remains operational

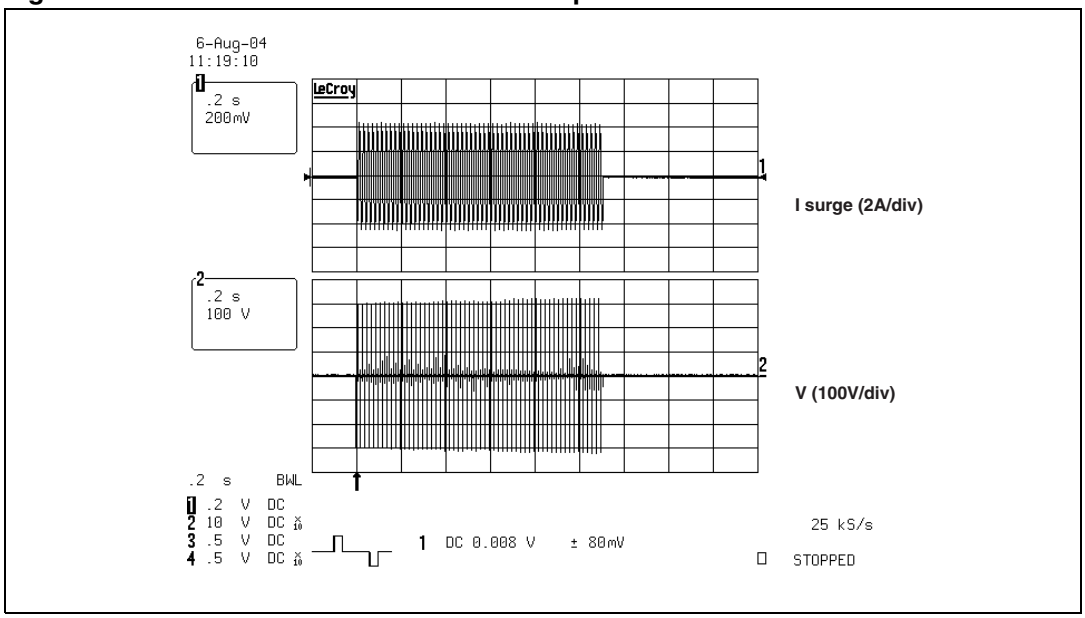

Test conditions:

600 V, 3 A, 1.1 s (first level), T_{amb} = 25 °C

Test result:

Fuse and Trisil OK after test in accordance with GR1089 requirements.

Figure 15. High current AC power test: the fuse acts like a switch by opening the circuit

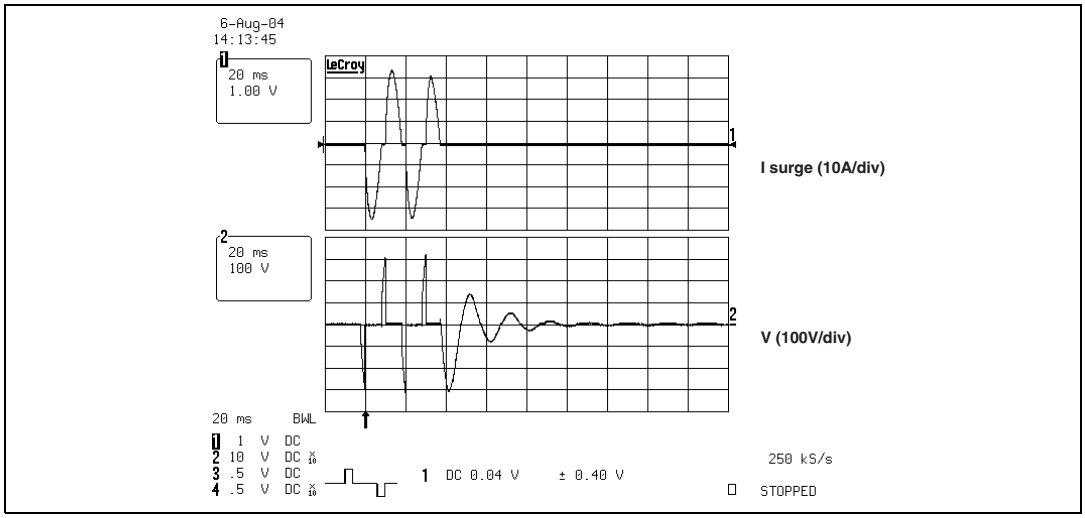

Test conditions:

277 V, 25 A (second level), T_{amb} = 25 °C

Test result:

Fuse safely opened and Trisil OK after test in accordance with GR1089 requirements.

Figure 16. Test circuit 1 for Dynamic I_{BO} and V_{BO} parameters

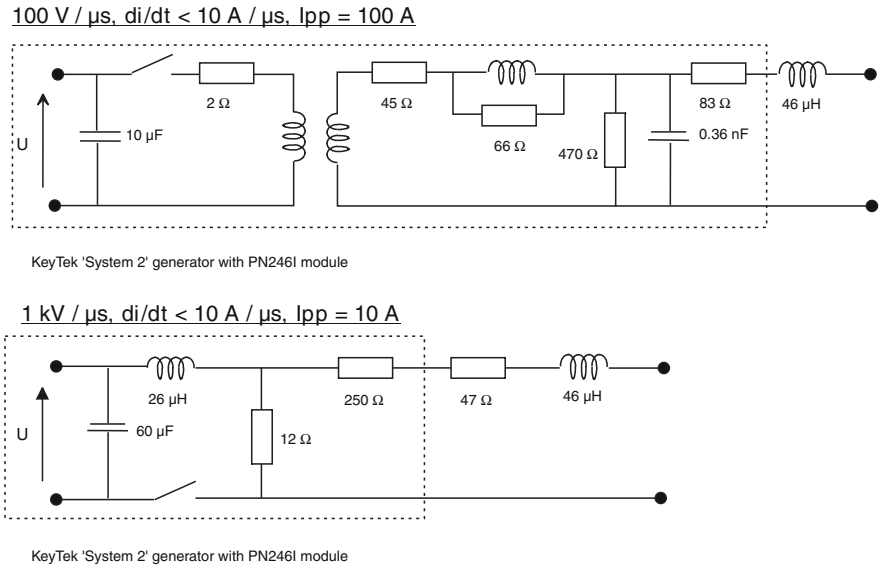

Figure 17. Test circuit 2 for I_{BO} and V_{BO} parameters

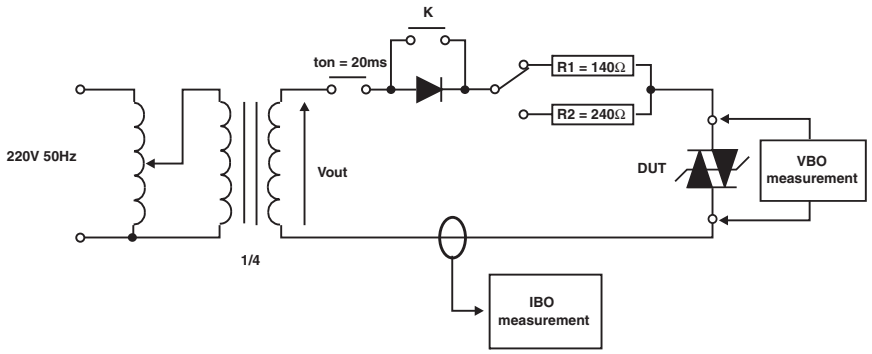

TEST PROCEDURE

Pulse test duration (tp = 20ms):

- for Bidirectional devices = Switch K is closed
- for Unidirectional devices = Switch K is open

V_{OUT} selection:

- Device with V_{BO} < 200V ➔ V_{OUT} = 250 V_{RMS}, R1 = 140Ω
- Device with V_{BO} ≥ 200V ➔ V_{OUT} = 480 V_{RMS}, R2 = 240Ω

Figure 18. Test circuit 3 for dynamic I_H parameter

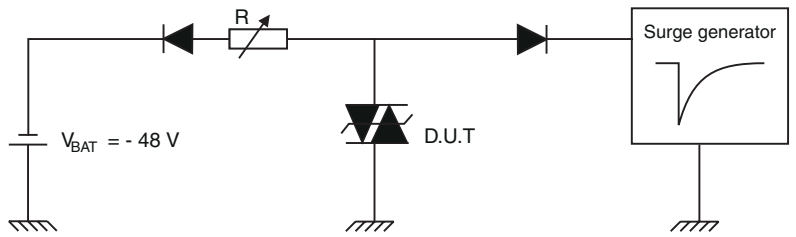

This is a GO-NOGO test which allows to confirm the holding current (I_H) level in a functional test circuit.

TEST PROCEDURE

1/ Adjust the current level at the I_H value by short circuiting the AK of the D.U.T.
2/ Fire the D.U.T. with a surge current → I_{PP} = 10A, 10/1000µs.
3/ The D.U.T. will come back off-state within 50ms maximum.

3 Ordering information scheme

Figure 19. Ordering information scheme

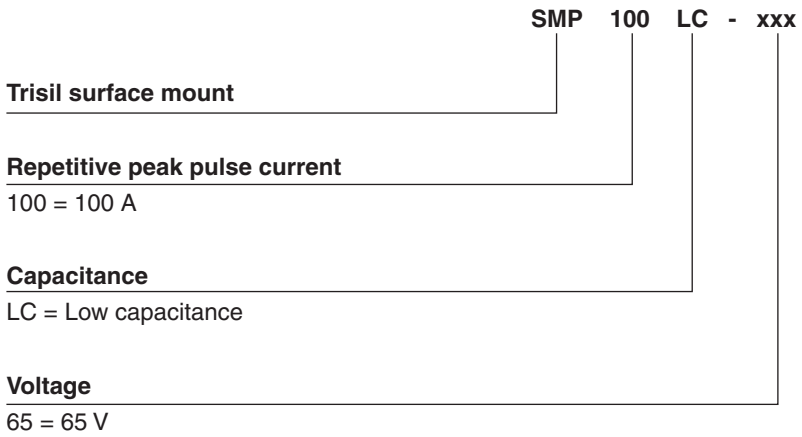

4 Package information

- Epoxy meets UL94, V0
- Lead-free package

In order to meet environmental requirements, ST offers these devices in different grades of ECOPACK® packages, depending on their level of environmental compliance. ECOPACK® specifications, grade definitions and product status are available at: www.st.com. ECOPACK® is an ST trademark.

Table 5. SMB dimensions

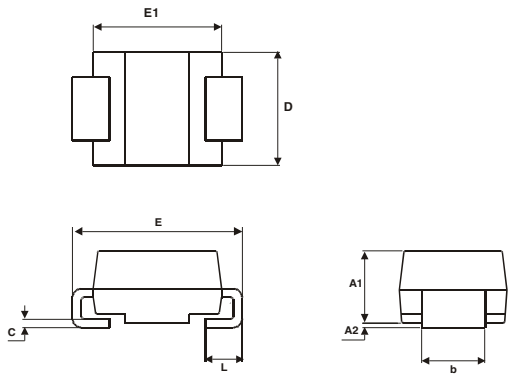

Ref.	Dimensions			
	Millimeters		Inches	
	Min.	Max.	Min.	Max.
A1	1.90	2.45	0.075	0.096
A2	0.05	0.20	0.002	0.008
b	1.95	2.20	0.077	0.087
c	0.15	0.40	0.006	0.016
E	5.10	5.60	0.201	0.220
E1	4.05	4.60	0.159	0.181
D	3.30	3.95	0.130	0.156
L	0.75	1.50	0.030	0.059

Figure 20. Footprint dimensions in mm (inches)

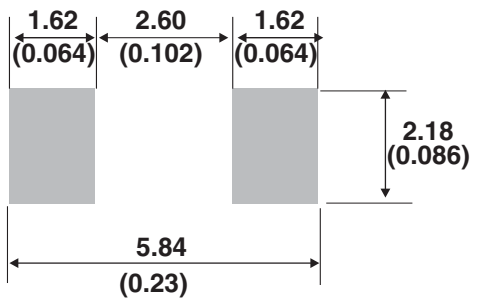

Figure 21. Marking layout(1)

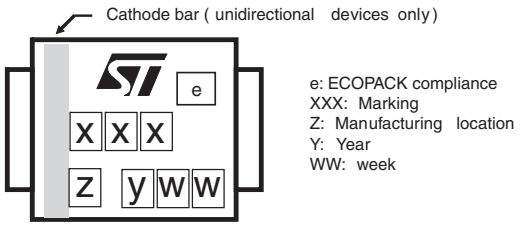

1. Marking layout can vary according to assembly location.

5 Ordering information

Table 6. Ordering information

Order code	Marking	Package	Weight	Base qty	Delivery mode
SMP100LC-8	PL8	SMB	98 mg	2500	Tape and reel
SMP100LC-25	L25				
SMP100LC-35	L35				
SMP100LC-65	L06				
SMP100LC-90	L09				
SMP100LC-120	L12				
SMP100LC-140	L14				
SMP100LC-160	L16				
SMP100LC-200	L20				
SMP100LC-230	L23				
SMP100LC-270	L27				
SMP100LC-320	L32				
SMP100LC-360	L36				
SMP100LC-400	L40				

6 Revision history

Table 7. Document revision history

Date	Revision	Changes
09-Nov-2004	9	Absolute ratings values, table 3 on page 2, updated.
07-Dec-2004	10	SMP100LC-320, SMP100LC-360 and SMP100LC-400 addition.
20-Jun-2005	11	Telecom Circuit Protector added in *Description*.
05-Mar-2007	12	Reformatted to current standards. SMB *Package information* updated. Standards compliance paragraphs added to *Description*.
05-Jan-2010	13	Corrected vertical axis labelling in *Figure 8*.
09-Feb-2012	14	Added UL statement in *Complies with the following standards*.

Please Read Carefully:

Information in this document is provided solely in connection with ST products. STMicroelectronics NV and its subsidiaries (“ST”) reserve the right to make changes, corrections, modifications or improvements, to this document, and the products and services described herein at any time, without notice.

All ST products are sold pursuant to ST’s terms and conditions of sale.

Purchasers are solely responsible for the choice, selection and use of the ST products and services described herein, and ST assumes no liability whatsoever relating to the choice, selection or use of the ST products and services described herein.

No license, express or implied, by estoppel or otherwise, to any intellectual property rights is granted under this document. If any part of this document refers to any third party products or services it shall not be deemed a license grant by ST for the use of such third party products or services, or any intellectual property contained therein or considered as a warranty covering the use in any manner whatsoever of such third party products or services or any intellectual property contained therein.

UNLESS OTHERWISE SET FORTH IN ST’S TERMS AND CONDITIONS OF SALE ST DISCLAIMS ANY EXPRESS OR IMPLIED WARRANTY WITH RESPECT TO THE USE AND/OR SALE OF ST PRODUCTS INCLUDING WITHOUT LIMITATION IMPLIED WARRANTIES OF MERCHANTABILITY, FITNESS FOR A PARTICULAR PURPOSE (AND THEIR EQUIVALENTS UNDER THE LAWS OF ANY JURISDICTION), OR INFRINGEMENT OF ANY PATENT, COPYRIGHT OR OTHER INTELLECTUAL PROPERTY RIGHT.

UNLESS EXPRESSLY APPROVED IN WRITING BY TWO AUTHORIZED ST REPRESENTATIVES, ST PRODUCTS ARE NOT RECOMMENDED, AUTHORIZED OR WARRANTED FOR USE IN MILITARY, AIR CRAFT, SPACE, LIFE SAVING, OR LIFE SUSTAINING APPLICATIONS, NOR IN PRODUCTS OR SYSTEMS WHERE FAILURE OR MALFUNCTION MAY RESULT IN PERSONAL INJURY, DEATH, OR SEVERE PROPERTY OR ENVIRONMENTAL DAMAGE. ST PRODUCTS WHICH ARE NOT SPECIFIED AS "AUTOMOTIVE GRADE" MAY ONLY BE USED IN AUTOMOTIVE APPLICATIONS AT USER’S OWN RISK.

Resale of ST products with provisions different from the statements and/or technical features set forth in this document shall immediately void any warranty granted by ST for the ST product or service described herein and shall not create or extend in any manner whatsoever, any liability of ST.

ST and the ST logo are trademarks or registered trademarks of ST in various countries.

Information in this document supersedes and replaces all information previously supplied.

The ST logo is a registered trademark of STMicroelectronics. All other names are the property of their respective owners.

© 2012 STMicroelectronics - All rights reserved

STMicroelectronics group of companies

Australia - Belgium - Brazil - Canada - China - Czech Republic - Finland - France - Germany - Hong Kong - India - Israel - Italy - Japan - Malaysia - Malta - Morocco - Philippines - Singapore - Spain - Sweden - Switzerland - United Kingdom - United States of America

www.st.com

Общество с ограниченной ответственностью «МосЧип» ИНН 7719860671 / КПП 771901001
Адрес: 105318, г.Москва, ул.Щербаковская д.3, офис 1107

Данный компонент на территории Российской Федерации

Вы можете приобрести в компании MosChip.

Для оперативного оформления запроса Вам необходимо перейти по данной ссылке:

http://moschip.ru/get-element

Вы можете разместить у нас заказ для любого Вашего проекта, будь то серийное производство или разработка единичного прибора.

В нашем ассортименте представлены ведущие мировые производители активных и пассивных электронных компонентов.

Нашей специализацией является поставка электронной компонентной базы двойного назначения, продукции таких производителей как XILINX, Intel (ex.ALTERA), Vicor, Microchip, Texas Instruments, Analog Devices, Mini-Circuits, Amphenol, Glenair.

Сотрудничество с глобальными дистрибьюторами электронных компонентов, предоставляет возможность заказывать и получать с международных складов практически любой перечень компонентов в оптимальные для Вас сроки.

На всех этапах разработки и производства наши партнеры могут получить квалифицированную поддержку опытных инженеров.

Система менеджмента качества компании отвечает требованиям в соответствии с ГОСТ Р ИСО 9001, ГОСТ РВ 0015-002 и ЭС РД 009

Офис по работе с юридическими лицами:

105318, г.Москва, ул.Щербаковская д.3, офис 1107, 1118, ДЦ «Щербаковский»

Телефон: +7 495 668-12-70 (многоканальный)

Факс: +7 495 668-12-70 (доб.304)

E-mail: info@moschip.ru

Skype отдела продаж:
moschip.ru
moschip.ru_4
moschip.ru_6
moschip.ru_9